KC Engineering and Land Surveying, P.C.

Foundation Design Report

for the

REPLACEMENT OF MALDEN TURNPIKE (CR-34) OVER I-87 (D214866)

Prepared by

KC Engineering and Land Surveying, P.C.

It is a violation of law for any person, unless they are acting under the direction of a licensed professional engineer, architect, landscape architect, or land surveyor, to alter an item in any way. If an item bearing the stamp of a licensed professional is altered, the altering engineer, architect, landscape architect, or land surveyor shall stamp the document and include the notation "altered by" followed by their signature, the date of such alteration, and a specific description of the alteration.

Ram Mohan R Kasturi, PE
Lead Geotechnical Engineer

Description	Author	Revision	Issue Date
Foundation Design Report	**Kamal Regmi/ Ram Kasturi**	**0**	**09/17/2025**

FOUNDATION DESIGN REPORT

REPLACEMENT OF MALDEN TURNPIKE (CR-34) OVER I-87 (D214866)

SEPTEMBER 2025

PREPARED BY

Engineering and Land Surveying, P.C.
7 PENN PLAZA, SUITE 1204
NEW YORK, NY 10001
(212) 947-4945
kcepc.com

PREPARED FOR

NEW YORK STATE THRUWAY AUTHORITY

NEW YORK STATE

TABLE OF CONTENTS

1.0 Introduction 1
1.1 Purpose and Scope 1
1.2 Project Location 1
1.3 Proposed Construction 1
2.0 Geotechnical Investigation 2
3.0 Foundation Design and Analysis 2
3.1 Seismic Analysis 2
3.2 Design Soil Parameters 2
3.3 Foundation Type 5
3.3.1 Abutments 7
3.3.2 Center Pier 7
4.0 Construction Considerations 7
4.1 Pile Installation Requirements 7
4.1.1 Pile Driving 7
4.1.2 PDA Testing 7
4.1.3 Obstructions 8
4.1.4 Utilities 8
4.2 Groundwater Control 8
4.3 Excavation Consideration 8
4.4 Control of Surface Water 8
5.0 Limitations 9

LIST OF FIGURES

Figure 1 – Project Location Map
Figure 2 – Project Aerial Map
Figure 3 – Idealized Soil Cross-section at Begin/ West Abutment
Figure 4 – Idealized Soil Cross-section at End/ East Abutment
Figure 5 – Idealized Soil Cross-section at Center Pier

LIST OF TABLES

Table 1 – Design Soil Parameters – West/Begin Abutment

Table 2 – Design Soil Parameters – East/End Abutment

Table 3 - Design Soil Parameters – Center Pier

Table 4 – Compressive Strength of Rock Core Samples

Table 5 – Pile Design Summary - West/Begin Abutment

Table 6 – Pile Design Summary – East/End Abutment

Table 7 – Pile Design Summary – Center Pier

LIST OF APPENDICES

Appendix A – Subsurface Exploration Plan

Boring Location Plan

Subsurface Exploration Logs

Laboratory Test Results

Appendix B – Subsurface Evaluation

Soil Properties Determination

SPT Corrections

Appendix C – Seismic Analysis

Appendix D – Foundation Design

D.1 Abutment Foundation Design

D.2 Center Pier Foundation Design

D.3 Pile Specifications

1.0 Introduction

1.1 Purpose and Scope

The Foundation Design Report (FDR) presents the foundation design recommendations for the proposed replacement of Malden Turnpike (CR-34) Bridge over New York State Thruway I-87 located in Saugerties, Ulster County, New York.

The following information has been summarized in this report:

- Evaluation and Interpretation of subsurface soil conditions
- Foundation Design Summary
- Settlement Analysis
- Construction considerations

The FDR has been prepared in general accordance with the requirements of applicable chapters from NYSDOT Geotechnical Design Manual (GDM, 2022 & 2016) and NYSDOT LRFD Bridge Design Specifications (AASHTO 9th Edition).

1.2 Project Location

The proposed bridge site is located along Malden Turnpike over New York State Thruway I-87. Location of proposed structures is presented in ***Figure 1 – Project Location Map*** and ***Figure 2 – Project Aerial Map.***

1.3 Proposed Construction

The proposed replacement bridge structure consists of a 228 ft. long two-span bridge with each span length measuring ~114 ft. center to center. The out-to-out width of the proposed bridge structure is 35 ft. and curb to curb width is 32 ft. accommodating two 11 ft. travel lanes and two 5 ft. shoulders.

The bridge will consist of integral abutments supported by a single row of HP14x117 H-piles driven into bedrock. The center pier will be supported by a 3X5 layout of HP14X117 H-piles driven into bedrock.

2.0 Geotechnical Investigation

The geotechnical investigation for the project was performed by Atlantic Testing Laboratories (ATL), which included soil borings and laboratory testing. The findings from the Geotechnical Report provided by ATL were used to develop the design soil parameters and subsurface profile for the pile foundation design. The soil borings from ATL's geotech report are included in Appendix A for reference.

3.0 Foundation Design and Analysis

Analyses and foundation design criteria are in accordance with the LRFD design specifications set forth in the NYDOT Geotechnical Design Manual (GDM) Chapter 11 and NYSDOT LRFD Bridge Design Specifications (AASHTO 9th Edition). See *Appendix D* for detailed ***Foundation Design Calculations.***

3.1 Seismic Analysis

The requirements for seismic analysis are based on AASHTO Guide Specifications for LRFD Seismic Bridge Design, 2nd Edition, 2011. A summary of seismic design criteria is presented below. See Appendix C for detailed analysis.

Site Class = 'E'
S_1 = 0.045
F_v = 3.5
S_{D1} = 0.16
SDC = 'B'

As per AASHTO Guide Specification for LRFD Seismic Bridge design, liquefaction assessment is recommended in certain conditions for structures with SDC 'B'. As the project site is subjected to limited seismic activity, further evaluation of liquefaction is not required.

3.2 Design Soil Parameters

Tables 3, 4 and 5 below show the soil parameters based on the generalized soil profile based on the corresponding soil boring logs at each substructure location. Refer to Figure 3,4 and 5 for the idealized soil profile.

To increase flexibility of the proposed piles in bending within the upper portion of the soils and to improve its ability to accommodate the superstructure thermal movement, it is recommended that the abutment piles be installed in augered holes. Pile design and analysis is based on an

augered length of 8 ft. measured from the bottom elevation of the pile cap. After installation of piles, the annular space around the piles shall be backfilled with loose sand.

Table 1 – Design Soil Parameters – West/Begin Abutment

Soil Layer	Height of soil layer (ft)	Soil Type	N-value	Corrected N-Value	Unit weight (pcf)	Friction angle (deg)	c (psf)
1	~8	Loose Sand (Backfill)	-	-	110	28	0
2	~4	Sand	-	-	130	36	0
3	~4	Clay	25	46	130	0	4000
4	~6	Clay	6	12	120	0	1000
5	~47	Clay	0	0	100	0	250
6	-	Rock	-	-	150	-	-

Table 2 – Design Soil Parameters – East/End Abutment

Soil Layer	Height of soil layer (ft)	Soil Type	N-value	Corrected N-Value	Unit weight (pcf)	Friction angle (deg)	c (psf)
1	~8	Loose Sand (Backfill)	-	-	110	28	0
2	~2	Gravel	15	29	125	32	0
3	~5	Sand	0	0	100	26	0
4	~5	Gravel	38	61	130	36	0
5	~10	Clay	6	9	120	0	750
6	~96	Clay	0	0	100	0	250
7	-	Rock	-	-	150	-	-

Table 3 – Design Soil Parameters – Center Pier

Soil Layer	Height of soil layer (ft)	Soil Type	N-value	Corrected N-Value	Unit weight (pcf)	Friction angle (deg)	c (psf)
1	~4	Clay	11	21	125	0	1500
2	~2	Clay	4	7	120	0	500
3	~69	Clay	0	0	100	0	250
4	-	Rock	-	102	150	-	-

Table 6 below shows the compressive strength of rock core samples based on the lab test results. Refer to *Appendix A* for Laboratory Test Results performed by ATL. A design rock compressive strength of 15000 psi is used for the pile design and analysis.

Table 4 – Compressive Strength of Rock Core Samples

Boring No.	Depth of Sample (ft.)	Run No.	Compressive Strength (psi)	Design Compressive Strength (psi)
DN-B-1	59.4-59.7	R1	15,960	15,000
DN-B-2	80.8-81.1	R1	16,820	

The design parameters are based on corrected N-values and selected based on correlations provided in GDM Chapter 8 and AASHTO Table 10.4.6.2.4-1.

The SPT blow counts have been corrected to account for hammer impact efficiency of 60% and overburden pressure as presented in AASHTO Section 10.4.6.2. Refer to *Appendix B* for GDM and AASHTO references.

3.3 Foundation Design

3.3.1 Abutments

The replacement bridge is proposed to have integral abutments with a single row of H-piles to support the structure. Due to the presence of thick soft clay soil layers and variation in rock elevations, the estimated pile length varies from 72 ft. To 129 ft.

The benefits of integral abutments include elimination of expansion joints, elimination of expansion bearings, improved long term serviceability of the structure, and reduced future maintenance. When expansion joints are eliminated, the abutment must still be capable of accommodating the thermal movements induced by the bridge superstructure. This is achieved by providing flexible foundations capable of accommodating the required thermal movements.

The foundation was designed using the foundation loads provided by Structures (JMT of New York, Inc.). The structural design of the piles was performed using an inelastic design approach recommended by the Vermont Agency of Transportation (VTrans) guidelines for integral abutments. This approach matches with the guidelines provided by the NYSDOT GDM Section 11.9.2.7.11 and AASHTO LRFD Bridge Design Specification, Section 4.4.

The group of piles were first modeled in the GROUP program with pile-to-pile cap connections as fixed. Vertical load, temperature displacement, and rotation due to live load and superimposed dead load were applied to the model. Based on this model, the maximum individual pile loading requirements were determined. Since the analysis showed plastic hinge formation at the top of the pile, a second model was created in LPILE for a single pile with a pin at the pile head with moment restraint equal to the plastic moment capacity of the pile. Design checks were performed to ensure the pile remains in elastic state after the formation of plastic hinge at the top to avoid the formation of second plastic hinge within the pile and to confirm pile stability.

Refer to Foundation Design Methodology in Appendix D.1 for detailed design steps.

Based on our review of the drawings, an approximately 4 ft high fill is proposed as part of the regrading at the abutment locations. Due to the presence of very soft and thick clayey soil layers, any additional placement of fill at the existing ground elevation will result in consolidation settlement and in turn would induce down drag loads on the piles. As per discussions with JMT, it has been decided to use light weight fill for the proposed regarding and to ensure a net zero change in the vertical stress. With this arrangement and based on the presumption that the existing subsurface soils would not be subject to any subsequent settlement, the piles are analyzed with no down drag loads. Any changes to this presumption should be brought to the attention of KCE for review and revised pile foundation analysis

Earth pressure on the abutments of continuous span bridge will produce additional vertical load on the abutment piles, in addition to the gravity loads, and needs to be accounted for in the pile design. The additional vertical load has been calculated by assuming that the spans are

separated and are simply supported at the center pier. See Appendix D.1 for the detailed calculations.

Table 5 – Pile Design Summary- West/Begin Abutment

Pile Size	HP14x117
Pile Cut off Elevation	~157.33 ft
Estimated Pile Length	~72 ft
Estimated Pile Tip Elevation	~85.33 ft
Minimum Pile Tip Elevation	~89.33 ft
Factored Geotechnical Capacity	331 kip
Max. Lateral Deflection at Top of Pile (Temperature Displacement) (Service)	1.07 in
Maximum Axial Load (Strength)	175.3 kip
Maximum Resultant Moment (Strength)	301.7 kip.ft
Maximum Resultant Shear (Strength)	131.0 kip

Table 6 – Pile Design Summary – East/End Abutment

Pile Size	HP14x117
Pile Cut off Elevation	~157.33 ft
Estimated Pile Length	~129 ft
Estimated Pile Tip Elevation	~28.33 ft
Minimum Pile Tip Elevation	~29.33 ft
Factored Geotechnical Capacity	331 kip
Max. Lateral Deflection at Top of Pile (Temperature Displacement) (Service)	1.07 in
Maximum Axial Load (Strength)	167.8 kip
Maximum Resultant Moment (Strength)	256.2 kip. ft
Maximum Resultant Shear (Strength)	127.6 kip

3.3.2 Center Pier

The replacement bridge is proposed to have a solid wall pier supported by H piles for the center pier. The piles were designed with the tip bearing on sound rock and hence the pile capacity is controlled by the structural limit states and the axial geotechnical capacity doesn't govern.

The subsurface condition at the pier site also indicates a very thick clayey soil layer. Our review of the plans indicate that there'll be no additional fill at the pier location. Due to absence of any vertical movement of the subsurface soil layer, there'll be no downdrag load acting on the piles. Hence, downdrag load was not considered for the pile design at the pier location.

Per NYSDOT GDM 11.9.2.3.6.3, settlement should be checked for both individual piles and pile groups when not driven to a bearing layer or rock. Since the piles are bearing on rock, no long-term and time-related settlements are expected.

The lateral geotechnical analysis of piles was performed in GROUP software by applying the anticipated structure loads and ensuring that the lateral deflection of piles is less than the maximum tolerable limit of 0.5 inches as stated in the NYSDOT GDM. P-multipliers values were applied based on Table 10.7.2.4-1. The design parameters in the GROUP program, foundation loadings, fixity conditions, and results obtained from the analysis are provided in Appendix C.

The structural design of the piles was performed based on the procedures outlined in Section 6 of AASHTO LRFD Specifications. The structural capacity was checked for the fixed and pinned conditions using the envelope approach as per NYSDOT Bridge Manual. The effective length factor k was applied based on AASHTO Table C4.6.2.5-1. Resistance factors for the strength limit state were taken as specified in AASHTO section 6.5.4.2. The piles were checked for flexure, axial, shear load and combined effect of axial and bending.

Table 7 – Pile Design Summary – Center Pier

Pile Size	HP14x117
Pile Cut off Elevation	139.52 ft
Estimated Pile Length	77.0 ft (Vertical), 78.0 ft (Battered)
Estimated Pile Tip Elevation	62.52 ft
Minimum Pile Tip Elevation	68.0 ft
Factored Geotechnical Capacity	399.0 Kips
Max. Lateral Deflection at Top of Pile	0.046 in
Maximum Axial Load (Strength)	239.5 Kips
Maximum Resultant Moment (Strength)	53.7 Kip. ft
Maximum Resultant Shear (Strength)	17.1 Kips

4.0 Construction Considerations

4.1 Pile Installation Requirements

4.1.1 Pile Driving

During pile driving, piles shall be truly vertical or battered as indicated on the contract plans. The top of any pile shall not vary from the plan location by more than 1 inch (for East and West Abutments) and 3 inches (for center pier). In addition, the tip of piles shall not have a variation of more than ¼" per foot (2% slope) from the vertical shown on the plan. If the installation location of the piles exceeds the tolerance limit of 1 inch (for East and West Abutments) and 3 inches (for center pier), a revised foundation analysis shall be performed to verify the adequacy of the installed piles. Installation of piles shall be inspected to confirm the pile length, pile alignment, pile tolerance limits, tip elevation, and driving criteria in terms of blows per inch. All piles shall be provided with pile shoe. Contractor shall perform pile driveability analysis to determine the hammer suitable to drive the piles to the required nominal capacity while keeping the driving stress within allowable limits. The pile driveability analysis shall also establish initial driving criteria in terms of blows per inch.

4.1.2 PDA Testing

Dynamic pile load testing (PDA) shall be performed as per contract plans to verify the design capacity of the piles and to develop pile installation driving criteria in terms of blows/inch. The Pile Driving Analyzer (PDA) shall be used to measure the hammer energy, and the Case Pile Wave Analysis (CAPWAP) shall be used to analyze the data on the test pile. Dynamic pile testing shall be performed in accordance with ASTM D 4945 – Standard Method for High-Strain Dynamic Testing of Piles.

4.1.3 Obstructions

If any obstructions are encountered during installation of piles, contractor shall use suitable means and methods to overcome such obstructions and install the piles to the required capacity and tip elevation. If the pile needs to be relocated due to site constraints, revised analysis shall be performed based on as-built conditions to confirm adequacy of the pile foundation. Piles shall be extended to the required tip elevation past any weak and weathered rock obstructions.

4.1.4 Utilities

Contractor shall verify the location of existing utilities and ensure that the foundation is clear of any such utilities at the time of installation. Where overhead utilities are present, location shall be verified by Contractor during installation of piles and keep required safe distance. Utilities to be relocated if required, to avoid any conflict.

4.2 Groundwater Control

Based on groundwater levels measured in the borings, groundwater issues are not anticipated during the placement of concrete for the abutment and pier. Contractor shall maintain dry conditions during placement of concrete for the abutments and pier and take necessary measures if required.

4.3 Excavation Consideration

All excavations shall be supported by installing the required temporary support of excavation (SOE). SOE shall be designed for the maximum height of soil retainment and any additional surcharge from construction equipment. Any required temporary excavations shall be conducted in accordance with OSHA safety guidelines.

4.4 Control of Surface Water

The control of surface runoff will be necessary to prevent and control erosion of exposed soils, especially on slopes, and the softening of exposed subgrades in excavations. Berms, ditches, trench drains, and pumping from sumps should be utilized as needed to readily remove any surface water, where needed.

5.0 Limitations

This report presents our findings, recommendations and considerations for the proposed design and construction as discussed in Section 1.0. It has been prepared in accordance with accepted engineering practice and in a manner consistent with the level of care and skill for this type of project within this geographic area. No warranty, expressed or implied, is made relative to liability for direct, indirect incidental, consequential or special loss or damage or other liability of any nature from said party's use of such report or reliance upon any of its content.

The conclusions and recommendations presented herein are based on field reconnaissance, research and available literature, the results of field exploration and laboratory materials testing,

and the results of engineering analyses. KC Engineering and Land Surveying should be immediately contacted should subsurface conditions be encountered that are materially different than those identified at the boring locations. Subsurface conditions that are materially different may require further investigation and supplemental recommendations.

Geotechnical engineering and the geologic sciences are characterized by uncertainty. Professional judgements presented herein are based partly on our understanding of the proposed construction, partly on our general experience, and on the state of the practice at the time of this writing.

FIGURES

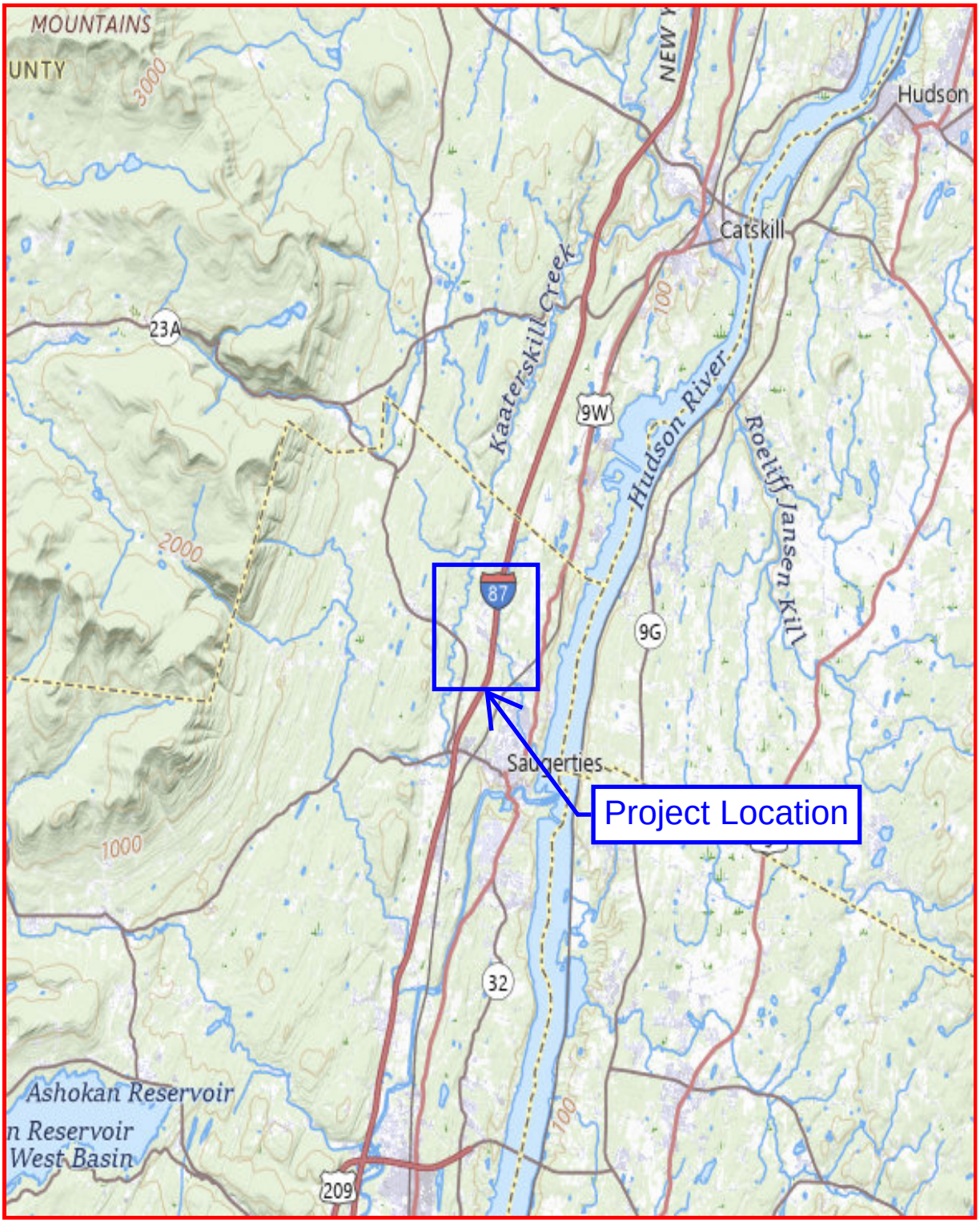

Engineering and Land Surveying, P.C.

FIGURE 1
PROJECT LOCATION MAP

PROJECT NO:

D214866

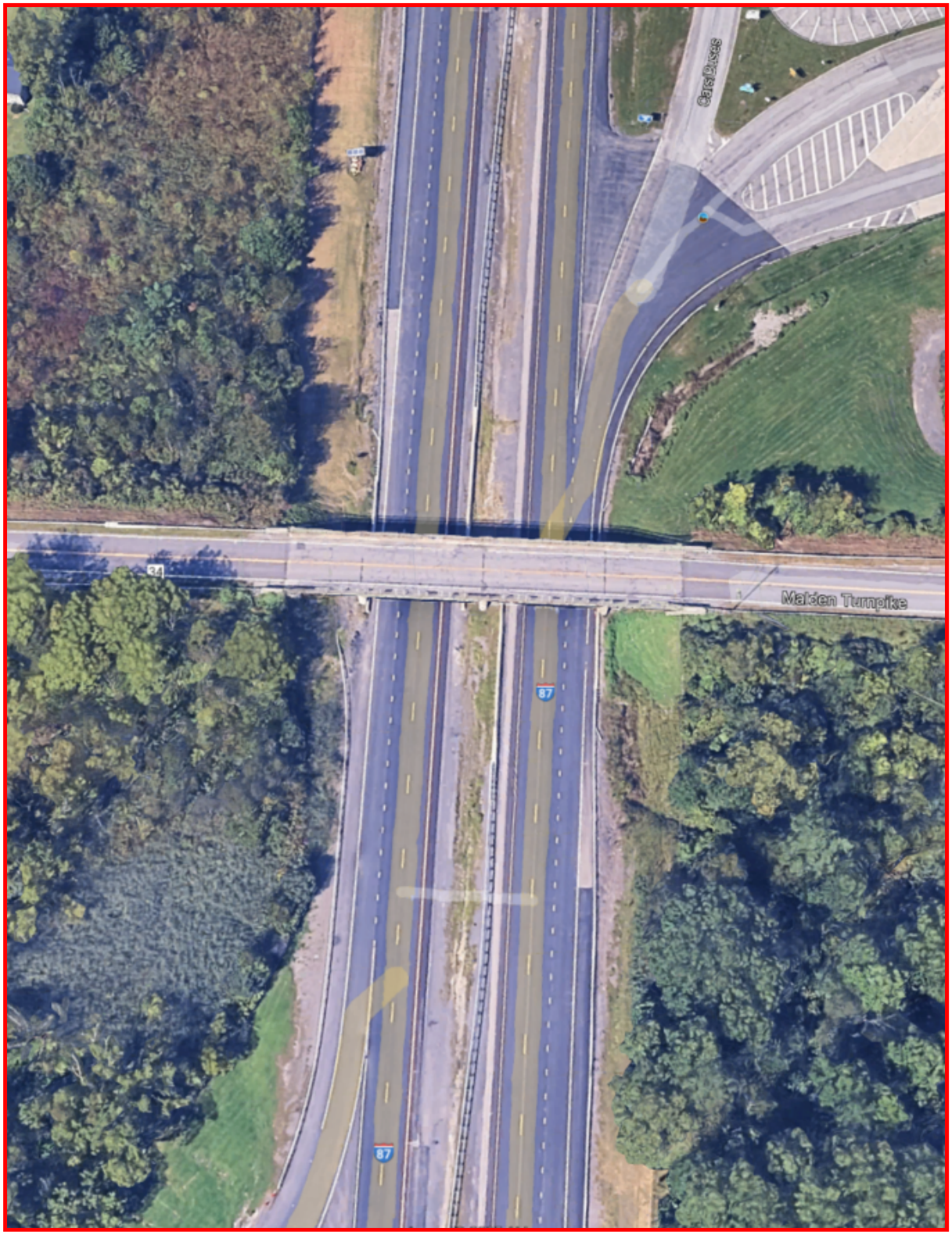

N

Engineering and Land Surveying, P.C.

FIGURE 2
PROJECT AERIAL MAP

PROJECT NO:

D214866

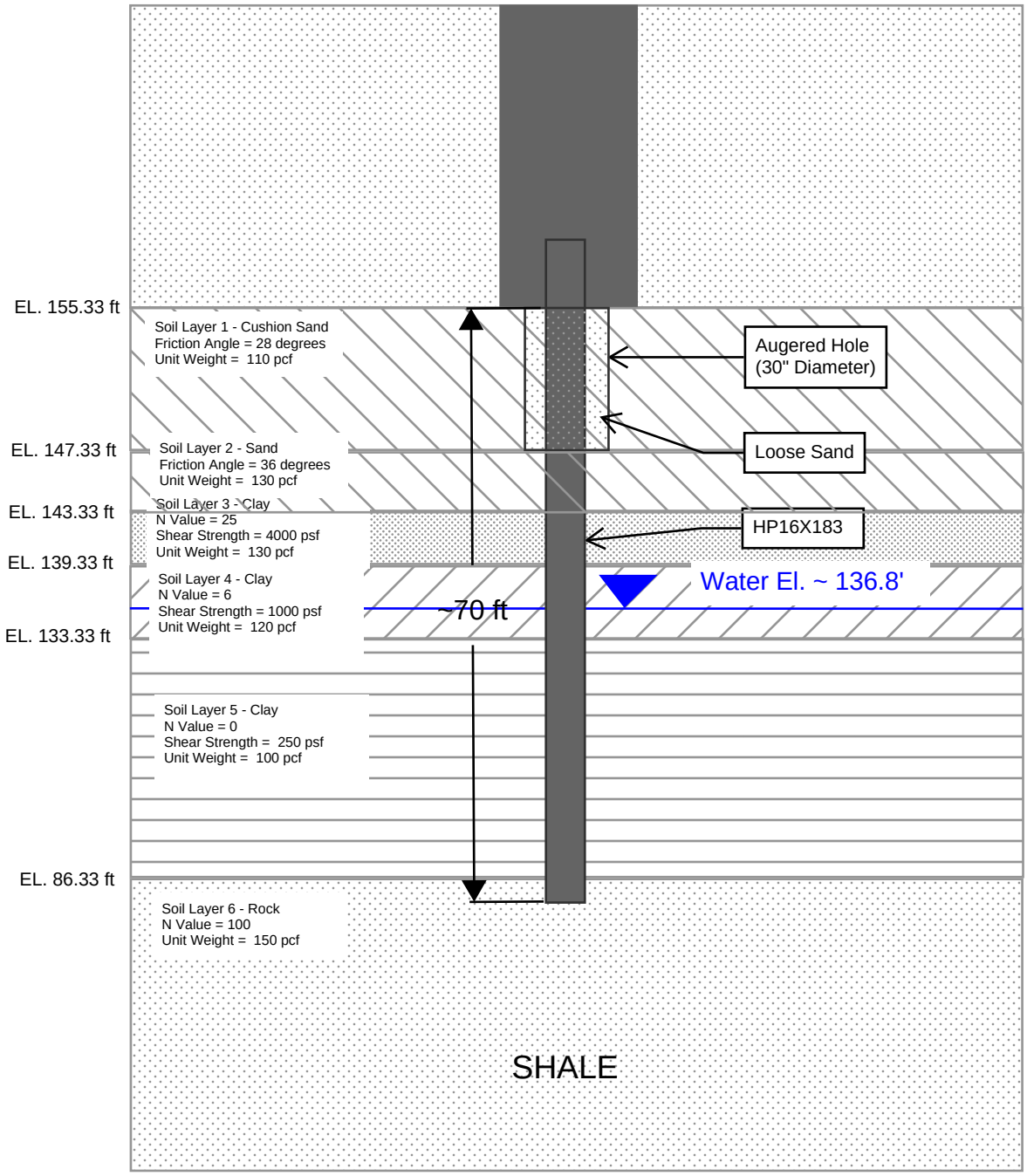

Engineering and Land Surveying, P.C.

FIGURE 3:
IDEALIZED SOIL CROSS SECTION
AT BEGIN/WEST ABUTMENT

PROJECT NO:
D214866

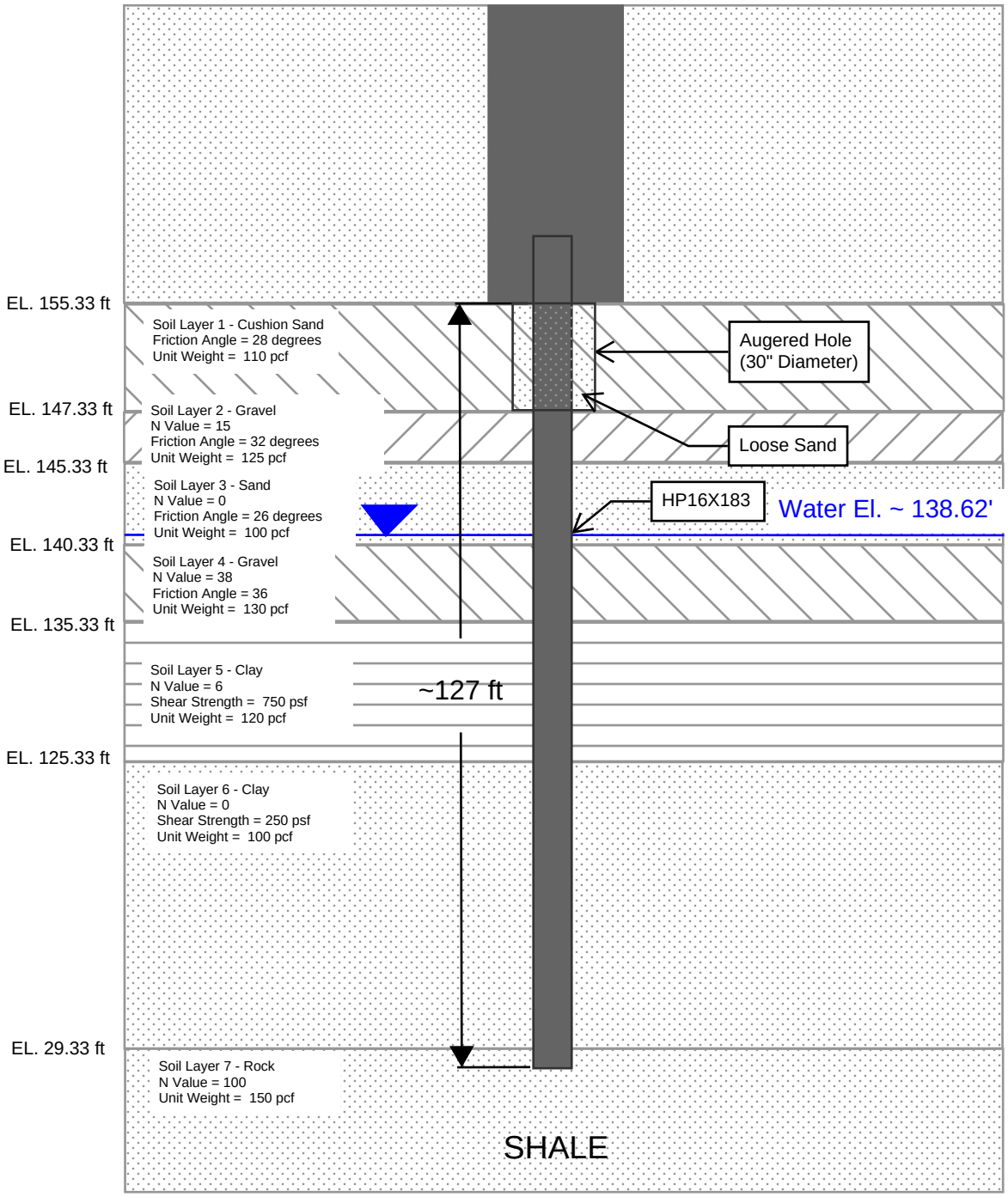

Engineering and Land Surveying, P.C.	FIGURE 4: IDEALIZED SOIL CROSS SECTION AT END/EAST ABUTMENT	PROJECT NO: D214866

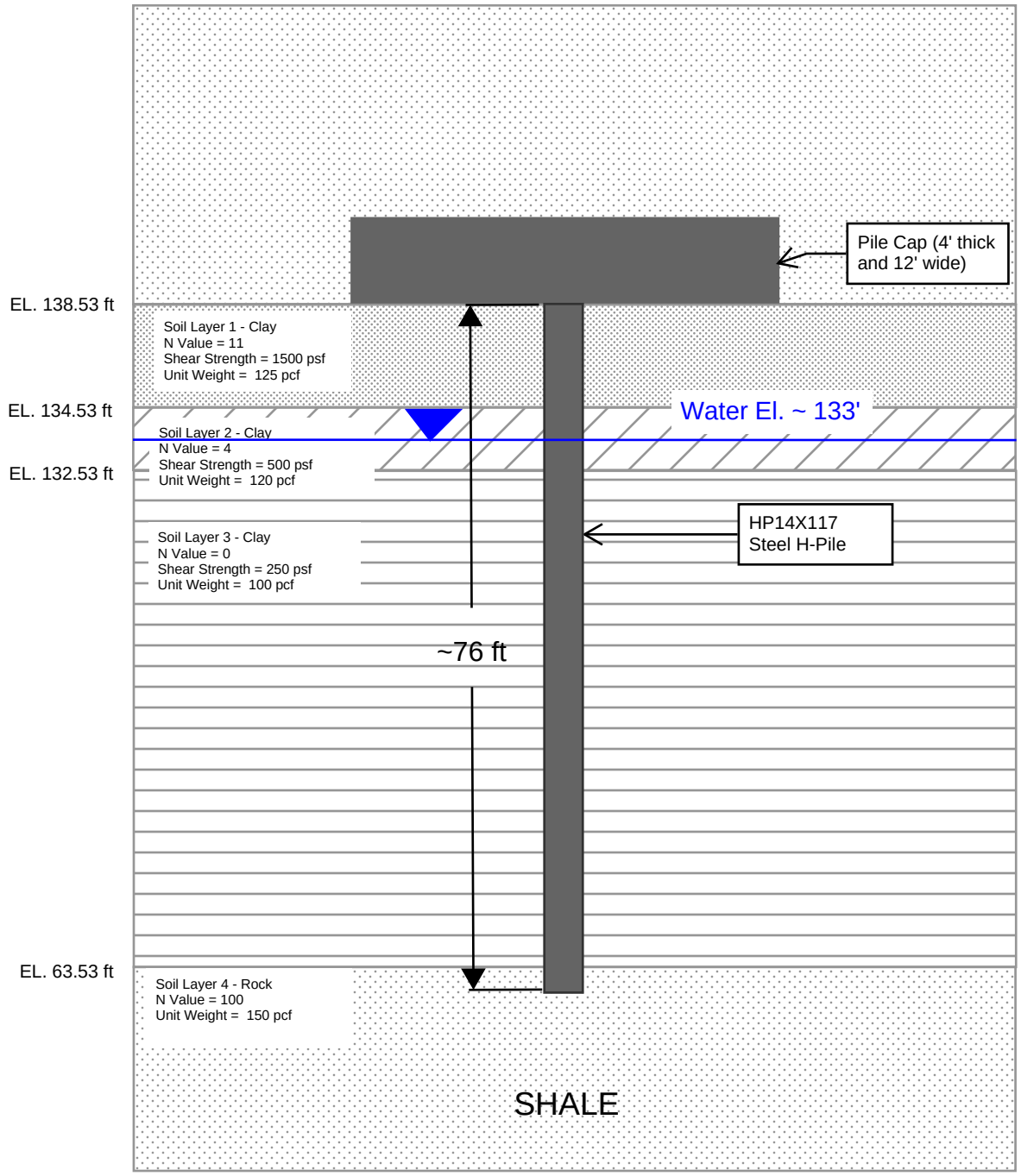

Engineering and Land Surveying, P.C.

FIGURE 5:
IDEALIZED SOIL CROSS SECTION
AT CENTER PIER

PROJECT NO:
D214866

APPENDIX A – GEOTECHNICAL INVESTIGATION

Boring Location Plan

Subsurface Exploration Logs

Laboratory Test Results

BORING LOCATION PLAN

This page is an excerpt from the Project Geotech Report prepared by Atlantic Testing Laboratories (ATL) and is included here for reference purpose only. KC Engineering assumes no liability for the information presented in these referenced pages.

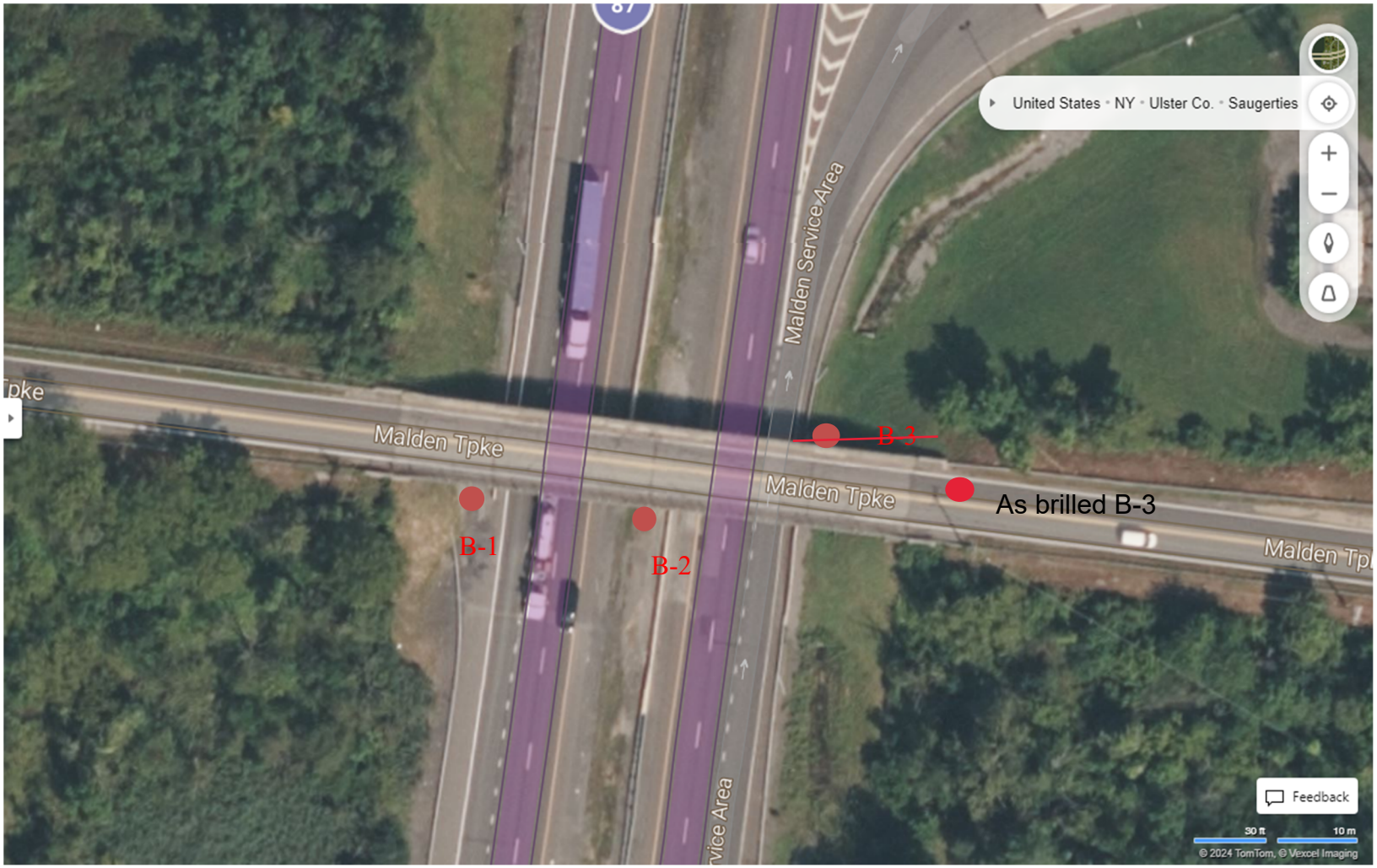

North

Boring Location Plan	Drawn by: AJS	Scale: Not to scale	Project No.: CD10733	Date: March 2024
Malden Turnpike Bridge Replacement Saugerties, New York	***ATLANTIC TESTING LABORATORIES*, Limited**			
	Albany, NY	Binghamton, NY	Canton, NY	Elmira, NY	Plattsburgh, NY
	Poughkeepsie, NY	Syracuse, NY	Rochester, NY	Utica, NY	Watertown, NY

CD-05
pdrive:Forms\CD-Subsurface\Boring Location Plan rev 2: 2-22-.22

SUBSURFACE EXPLORATION LOGS

This page is an excerpt from the Project Geotech Report prepared by Atlantic Testing Laboratories (ATL) and is included here for reference purpose only. KC Engineering assumes no liability for the information presented in these referenced pages.

SM 282 E 12/02

NEW YORK STATE THRUWAY AUTHORITY
NEW YORK STATE CANAL CORPORATION

SUBSURFACE EXPLORATION LOG

PSN | BORNUM B-1
DIVISION Albany
COUNTY Ulster
PIN
ROUTE Thruway Mainline
MILEPOST 103.16
PROJECT Assignment 2 - NYSTA CR34 over Thruway Mainline Bridge Replacement

HOLE DN-B
LINE SB West Shoulder
STA
OFFSET ft
SURF. ELEV. 143.4595, NAD 88
DEPTH TO WATER

COORDINATES (Lat) 42.108306°N (Long) 73.958204°W
DATE START 3/27/2024 **DATE FINISH** 3/28/2024

AUGER
CASING O. D. 4-1/2 in I. D. 4 in
SAMPLER O. D. 2 in I. D. 1-3/8 in

WT OF HAMMER-CASING lb **HAMMER FALL-CASING** in
WT OF HAMMER-SAMPLER 140 lb **HAMMER FALL-SAMPLER** 30 in
HAMMER TYPE Automatic

CASING BLOWS/ft	DEPTH (ft.) BELOW SURFACE	SAMPLE NO.	BLOWS ON SAMPLER (in.) 0/6	6/12	12/18	18/24	MOIST. CONT. (%)	Soil Recovery (in.)	Rock Recovery (ft.)	DESCRIPTION OF SOIL AND ROCK	
	0.0	SS1	5	9	16	19		19		4" CRUSHED STONE FILL Brown Silty CLAY; some cf Gravel; little cmf Sand	M - PL
		SS2	50/3"				6.5%	3		Dark Brown cmf SAND; little cf Gravel; trace Silt; trace Organic Material (root hairs)	M - NPL
	5.0	SS3	3	2	3	5	29.0%	12		Brownish-Grey CLAY; trace mf Sand; trace Organic Material (root hairs)	M - PL
		SS4	10	8	7	7	34.2%	18		Brown CLAY; trace mf Sand; trace Silt	M - PL
	10.0	SS5	3	4	3	4	42.0%	16		Brown CLAY; trace cmf Sand; trace Silt	M - PL
		SS6	WH	1	1	1	47.3%	24		Grey CLAY; trace f Sand; trace Silt	W - PL
		SS7	WH	1	WH	1		24		Greyish-Brown CLAY; trace f Sand; trace Silt	W - PL
	15.0	SS8	WH/24"				47.5%	24		Grey CLAY; trace Silt LL = 47, PL = 21, PI = 26	S - PL
	20.0	SS9	WH/24"				64.7%	24		Grey CLAY; trace Silt	S - PL
	25.0	SS10	WH/24"				67.4%	24		Grey CLAY; trace Silt	S - PL

The subsurface information shown here was obtained for design and estimate purposes. It is made available so that users may have access to the same information available to the State. It is presented in good faith. By the nature of the exploration process, the information represents only a small fraction of the total volume of the material at the site. Interpolation between data samples may not be indicative of the actual material encountered.

DRILL RIG OPERATOR Robert Drake; Michael Keleher
SOIL & ROCK DESCRIPTION Jesse O'Dell (ATL)
INSPECTOR Jesse O'Dell (ATL)
BIN
STRUCTURE NAME

CONTRACT D214866 **CONTRACTOR** ATL

SHEET 1 OF 3 HOLE DN-B

TWY-CAN SUBSURF EXPLORATION CD10733.JMT THRUWAY - SAUGERTIES.GPJ TWYSE1TMPL_V05.GDT 8/1/24

This page is an excerpt from the Project Geotech Report prepared by Atlantic Testing Laboratories (ATL) and is included here for reference purpose only. KC Engineering assumes no liability for the information presented in these referenced pages.

SM 282 E 12/02

NEW YORK STATE THRUWAY AUTHORITY
NEW YORK STATE CANAL CORPORATION

SUBSURFACE EXPLORATION LOG

PSN | BORNUM B-1
DIVISION Albany
COUNTY Ulster
PIN
ROUTE Thruway Mainline
MILEPOST 103.16
PROJECT Assignment 2 - NYSTA CR34 over Thruway Mainline Bridge Replacement

HOLE DN-B
LINE SB West Shoulder
STA
OFFSET ft
SURF. ELEV. 143.4595, NAD 88
DEPTH TO WATER

COORDINATES (Lat) 42.108306°N (Long) 73.958204°W
DATE START 3/27/2024 **DATE FINISH** 3/28/2024

AUGER
CASING O. D. 4-1/2 in I. D. 4 in
SAMPLER O. D. 2 in I. D. 1-3/8 in

WT OF HAMMER-CASING lb **HAMMER FALL-CASING** in
WT OF HAMMER-SAMPLER 140 lb **HAMMER FALL-SAMPLER** 30 in
HAMMER TYPE Automatic

CASING BLOWS/ft	DEPTH (ft.) BELOW SURFACE	SAMPLE NO.	BLOWS ON SAMPLER (in.) 0/6 6/12 12/18 18/24	MOIST. CONT. (%)	Soil Recovery (in.)	Rock Recovery (ft.)	DESCRIPTION OF SOIL AND ROCK	
	25.0							
		SS11	WH/24"	55.1%	24		Grey CLAY; trace Silt	S - PL
	30.0							
		SS12	WH/24"	39.4%	24		Grey CLAY; trace Silt LL = 43, PL = 19, PI = 24	S - PL
	35.0							
		SS13	WH/24"		24		Grey CLAY; trace Silt	S - PL
	40.0							
		SS14	WR/24"		24		Grey CLAY; trace Silt	W - PL
	45.0							
		SS15	WR/24"		24		Grey CLAY; trace Silt	W - PL
	50.0							

The subsurface information shown here was obtained for design and estimate purposes. It is made available so that users may have access to the same information available to the State. It is presented in good faith. By the nature of the exploration process, the information represents only a small fraction of the total volume of the material at the site. Interpolation between data samples may not be indicative of the actual material encountered.

DRILL RIG OPERATOR Robert Drake; Michael Keleher
SOIL & ROCK DESCRIPTION Jesse O'Dell (ATL)
INSPECTOR Jesse O'Dell (ATL)
BIN
STRUCTURE NAME

CONTRACT D214866 **CONTRACTOR** ATL

SHEET 2 OF 3 HOLE DN-B

TWY-CAN SUBSURF EXPLORATION CD10733.JMT THRUWAY - SAUGERTIES.GPJ TWYSE1TMPL_V05.GDT 8/1/24

This page is an excerpt from the Project Geotech Report prepared by Atlantic Testing Laboratories (ATL) and is included here for reference purpose only. KC Engineering assumes no liability for the information presented in these referenced pages.

SM 282 E 12/02

NEW YORK STATE THRUWAY AUTHORITY
NEW YORK STATE CANAL CORPORATION

SUBSURFACE EXPLORATION LOG

PSN | BORNUM B-1
DIVISION Albany
COUNTY Ulster
PIN
ROUTE Thruway Mainline
MILEPOST 103.16
PROJECT Assignment 2 - NYSTA CR34 over Thruway Mainline Bridge Replacement

HOLE DN-B
LINE SB West Shoulder
STA
OFFSET ft
SURF. ELEV. 143.4595, NAD 88
DEPTH TO WATER

COORDINATES (Lat) 42.108306°N (Long) 73.958204°W
DATE START 3/27/2024 **DATE FINISH** 3/28/2024

AUGER
CASING O. D. 4-1/2 in I. D. 4 in
SAMPLER O. D. 2 in I. D. 1-3/8 in

WT OF HAMMER-CASING lb **HAMMER FALL-CASING** in
WT OF HAMMER-SAMPLER 140 lb **HAMMER FALL-SAMPLER** 30 in
HAMMER TYPE Automatic

CASING BLOWS/ft	DEPTH (ft.) BELOW SURFACE	SAMPLE NO.	BLOWS ON SAMPLER (in.) 0/6	6/12	12/18	18/24	MOIST. CONT. (%)	Soil Recovery (in.)	Rock Recovery (ft.)	DESCRIPTION OF SOIL AND ROCK
	50.0									
		SS16	7	50/5"				13		Grey CLAY; and cf Gravel; little cmf Sand; trace Silt — W - PL
	55.0									Possible WEATHERED BEDROCK — -
										Encountered possible WEATHERED ROCK at 54.5 feet. Advanced 3 7/8" tri-cone roller bit to 57.0 feet and began coring.
		RUN1							54	Black SHALE — -
										54" or 90% Recovery 8 Pieces (40") - 26% Chips and Fragments 4 Pieces longer than 4" (33") - RQD = 55%
	60.0									

BOTTOM OF HOLE AT 62.00 ft

Notes:
1. Borehole backfilled with on-site soils.

DATE	TIME	DEPTH (ft.) HOLE	CASING	WATER	ARTESIAN HEAD HEIGHT ABOVE GROUND	FILLED WITH WATER AT END OF DAY
27-Mar-24	16:20	44.00	10.00	9.10		
28-Mar-24	07:30	44.00	10.00	4.40		

The subsurface information shown here was obtained for design and estimate purposes. It is made available so that users may have access to the same information available to the State. It is presented in good faith. By the nature of the exploration process, the information represents only a small fraction of the total volume of the material at the site. Interpolation between data samples may not be indicative of the actual material encountered.

DRILL RIG OPERATOR Robert Drake; Michael Keleher
SOIL & ROCK DESCRIPTION Jesse O'Dell (ATL)
INSPECTOR Jesse O'Dell (ATL)
BIN
STRUCTURE NAME

CONTRACT D214866 **CONTRACTOR** ATL

SHEET 3 OF 3 HOLE DN-B

TWY-CAN SUBSURF EXPLORATION CD10733 JMT THRUWAY - SAUGERTIES.GPJ TWYSE1TMPL_V05.GDT 8/1/24

This page is an excerpt from the Project Geotech Report prepared by Atlantic Testing Laboratories (ATL) and is included here for reference purpose only. KC Engineering assumes no liability for the information presented in these referenced pages.

SM 282 E 12/02

NEW YORK STATE THRUWAY AUTHORITY
NEW YORK STATE CANAL CORPORATION

SUBSURFACE EXPLORATION LOG

PSN | BORNUM B-2
DIVISION Albany
COUNTY Ulster
PIN
ROUTE Thruway Mainline
MILEPOST 103.16
PROJECT Assignment 2 - NYSTA CR34 over Thruway Mainline Bridge Replacement

HOLE DN-B
LINE Median
STA
OFFSET ft
SURF. ELEV. 143.0341, NAD 88
DEPTH TO WATER

COORDINATES (Lat) 42.108540°N (Long) 73.957890°W
DATE START 3/26/2024 **DATE FINISH** 3/26/2024

AUGER
CASING O. D. 4-1/2 in I. D. 4 in
SAMPLER O. D. 2 in I. D. 1-3/8 in

WT OF HAMMER-CASING lb **HAMMER FALL-CASING** in
WT OF HAMMER-SAMPLER 140 lb **HAMMER FALL-SAMPLER** 30 in
HAMMER TYPE Automatic

CASING BLOWS/ft	DEPTH (ft.) BELOW SURFACE	SAMPLE NO.	BLOWS ON SAMPLER (in.) 0/6	6/12	12/18	18/24	MOIST. CONT. (%)	Soil Recovery (in.)	Rock Recovery (ft.)	DESCRIPTION OF SOIL AND ROCK	
	0.0	SS1	4	6	33	11		19		4" CRUSHED STONE FILL Light Brown CLAY & SILT; some cmf Sand; little f Gravel	M - LPL
		SS2	8	10	10	14	20.6%	20		Brown Silty CLAY; trace f Gravel; trace mf Sand	M - PL
	5.0	SS3	3	4	5	8	32.5%	24		Brown CLAY; trace mf Sand; trace Silt	M - PL
		SS4	6	7	7	10	32.3%	24		Brown CLAY; trace f Sand; trace Silt	M - PL
	10.0	SS5	3	1	3	4	40.1%	13		Brown CLAY; trace f Sand; trace Silt	W - PL
		SS6	WH/24"				49.1%	24		Grey CLAY; trace f Sand; trace Silt	W - PL
		SS7	WH/24"					24		Grey CLAY; trace f Sand; trace Silt	W - PL
	15.0	SS8	WH/24"					24		Grey CLAY; trace f Sand; trace Silt	W - PL
	20.0	SS9	WH/24"					24		Grey CLAY; trace f Sand; trace Silt	W - PL
	25.0	SS10	WH/24"					24		Grey CLAY; trace f Sand; trace Silt	W - PL

The subsurface information shown here was obtained for design and estimate purposes. It is made available so that users may have access to the same information available to the State. It is presented in good faith. By the nature of the exploration process, the information represents only a small fraction of the total volume of the material at the site. Interpolation between data samples may not be indicative of the actual material encountered.

DRILL RIG OPERATOR Robert Drake; Michael Keleher
SOIL & ROCK DESCRIPTION Jesse O'Dell (ATL)
INSPECTOR Jesse O'Dell (ATL)
BIN
STRUCTURE NAME

CONTRACT D214866 **CONTRACTOR** ATL

SHEET 1 OF 4 HOLE DN-B

TWY-CAN SUBSURF EXPLORATION CD10733.JMT THRUWAY - SAUGERTIES.GPJ TWYSE1TMPL_V05.GDT 8/1/24

This page is an excerpt from the Project Geotech Report prepared by Atlantic Testing Laboratories (ATL) and is included here for reference purpose only. KC Engineering assumes no liability for the information presented in these referenced pages.

SM 282 E 12/02

NEW YORK STATE THRUWAY AUTHORITY
NEW YORK STATE CANAL CORPORATION

SUBSURFACE EXPLORATION LOG

PSN _____ BORNUM B-2
DIVISION Albany
COUNTY Ulster
PIN
ROUTE Thruway Mainline
MILEPOST 103.16
PROJECT Assignment 2 - NYSTA CR34 over Thruway Mainline Bridge Replacement

HOLE DN-B
LINE Median
STA
OFFSET ft
SURF. ELEV. 143.0341, NAD 88
DEPTH TO WATER

COORDINATES (Lat) 42.108540°N (Long) 73.957890°W
DATE START 3/26/2024 **DATE FINISH** 3/26/2024

AUGER
CASING O. D. 4-1/2 in I. D. 4 in
SAMPLER O. D. 2 in I. D. 1-3/8 in

WT OF HAMMER-CASING lb **HAMMER FALL-CASING** in
WT OF HAMMER-SAMPLER 140 lb **HAMMER FALL-SAMPLER** 30 in
HAMMER TYPE Automatic

CASING BLOWS/ft	DEPTH (ft.) BELOW SURFACE	SAMPLE NO.	BLOWS ON SAMPLER (in.) 0/6	6/12	12/18	18/24	MOIST. CONT. (%)	Soil Recovery (in.)	Rock Recovery (ft.)	DESCRIPTION OF SOIL AND ROCK	
	25.0										
		SS11	WH/24"					24		Grey CLAY; trace f Sand; trace Silt	W - PL
	30.0										
		SS12	WR/12"					24		Grey CLAY; trace f Sand; trace Silt	W - PL
	35.0				WH/12"						
		SS13	WR/18"					24		Grey CLAY; trace f Sand; trace Silt	W - PL
	40.0					WH					
		SS14	WR/18"					24		Grey CLAY; trace f Sand; trace Silt	W - PL
	45.0					WH					
		SS15	WR/18"					24		Grey CLAY; trace f Sand; trace Silt	W - PL
	50.0										

The subsurface information shown here was obtained for design and estimate purposes. It is made available so that users may have access to the same information available to the State. It is presented in good faith. By the nature of the exploration process, the information represents only a small fraction of the total volume of the material at the site. Interpolation between data samples may not be indicative of the actual material encountered.

DRILL RIG OPERATOR Robert Drake; Michael Keleher
SOIL & ROCK DESCRIPTION Jesse O'Dell (ATL)
INSPECTOR Jesse O'Dell (ATL)
BIN
STRUCTURE NAME

CONTRACT D214866 **CONTRACTOR** ATL

SHEET 2 OF 4 HOLE DN-B

TWY-CAN SUBSURF EXPLORATION CD10733.JMT THRUWAY - SAUGERTIES.GPJ TWYSE1TMPL_V05.GDT 8/1/24

This page is an excerpt from the Project Geotech Report prepared by Atlantic Testing Laboratories (ATL) and is included here for reference purpose only. KC Engineering assumes no liability for the information presented in these referenced pages.

SM 282 E 12/02

NEW YORK STATE THRUWAY AUTHORITY
NEW YORK STATE CANAL CORPORATION

SUBSURFACE EXPLORATION LOG

PSN _____ BORNUM B-2
DIVISION Albany
COUNTY Ulster
PIN
ROUTE Thruway Mainline
MILEPOST 103.16
PROJECT Assignment 2 - NYSTA CR34 over Thruway Mainline Bridge Replacement

HOLE DN-B
LINE Median
STA
OFFSET ft
SURF. ELEV. 143.0341, NAD 88
DEPTH TO WATER

COORDINATES (Lat) 42.108540°N (Long) 73.957890°W
DATE START 3/26/2024 **DATE FINISH** 3/26/2024

AUGER
CASING O. D. 4-1/2 in I. D. 4 in
SAMPLER O. D. 2 in I. D. 1-3/8 in

WT OF HAMMER-CASING lb **HAMMER FALL-CASING** in
WT OF HAMMER-SAMPLER 140 lb **HAMMER FALL-SAMPLER** 30 in
HAMMER TYPE Automatic

CASING BLOWS/ft	DEPTH (ft.) BELOW SURFACE	SAMPLE NO.	BLOWS ON SAMPLER (in.) 0/6	6/12	12/18	18/24	MOIST. CONT. (%)	Soil Recovery (in.)	Rock Recovery (ft.)	DESCRIPTION OF SOIL AND ROCK	
	50.0					WH					
		SS16	WR/18"					24		Grey CLAY; trace f Sand; trace Silt	W - PL
	55.0					WH					
		SH1								Grey CLAY; trace f Sand; trace Silt	W - PL
	60.0										
		SS17	WR/24"					24		Grey CLAY; trace f Sand; trace Silt	S - PL
	65.0										
		SS18	WR/24"					24		Grey CLAY; trace f Sand; trace Silt	S - PL
	70.0										
		SS19	WH	50/5"				5		Grey CLAY; and cf Gravel; some cmf Sand; trace Silt;	S - PL
	75.0										

The subsurface information shown here was obtained for design and estimate purposes. It is made available so that users may have access to the same information available to the State. It is presented in good faith. By the nature of the exploration process, the information represents only a small fraction of the total volume of the material at the site. Interpolation between data samples may not be indicative of the actual material encountered.

DRILL RIG OPERATOR Robert Drake; Michael Keleher
SOIL & ROCK DESCRIPTION Jesse O'Dell (ATL)
INSPECTOR Jesse O'Dell (ATL)
BIN
STRUCTURE NAME

CONTRACT D214866 **CONTRACTOR** ATL

SHEET 3 OF 4 HOLE DN-B

TWY-CAN SUBSURF EXPLORATION CD10733.JMT THRUWAY - SAUGERTIES.GPJ TWYSE1TMPL_V05.GDT 8/1/24

This page is an excerpt from the Project Geotech Report prepared by Atlantic Testing Laboratories (ATL) and is included here for reference purpose only. KC Engineering assumes no liability for the information presented in these referenced pages.

SM 282 E 12/02

NEW YORK STATE THRUWAY AUTHORITY
NEW YORK STATE CANAL CORPORATION

SUBSURFACE EXPLORATION LOG

PSN | BORNUM B-2
DIVISION Albany
COUNTY Ulster
PIN
ROUTE Thruway Mainline
MILEPOST 103.16
PROJECT Assignment 2 - NYSTA CR34 over Thruway Mainline Bridge Replacement

HOLE DN-B
LINE Median
STA
OFFSET ft
SURF. ELEV. 143.0341, NAD 88
DEPTH TO WATER

COORDINATES (Lat) 42.108540°N (Long) 73.957890°W
DATE START 3/26/2024 **DATE FINISH** 3/26/2024

AUGER
CASING O. D. 4-1/2 in I. D. 4 in
SAMPLER O. D. 2 in I. D. 1-3/8 in

WT OF HAMMER-CASING lb **HAMMER FALL-CASING** in
WT OF HAMMER-SAMPLER 140 lb **HAMMER FALL-SAMPLER** 30 in
HAMMER TYPE Automatic

CASING BLOWS/ft	DEPTH (ft.) BELOW SURFACE	SAMPLE NO.	BLOWS ON SAMPLER (in.) 0/6	6/12	12/18	18/24	MOIST. CONT. (%)	Soil Recovery (in.)	Rock Recovery (ft.)	DESCRIPTION OF SOIL AND ROCK
	75.0									Possible WEATHERED BEDROCK Encountered possible WEATHERED ROCK at 74.4 feet. Advanced 3 7/8" tri-cone roller bit to 79.0 feet and began coring.
	80.0	RUN1							57	Black SHALE 57" or 95% Recovery 6 Pieces (54") - 5.2% Chips and Fragments 5 Pieces longer than 4" (51") - RQD = 85%

BOTTOM OF HOLE AT 84.00 ft

Notes:
1. Borehole backfilled with on-site soils.

DATE	TIME	DEPTH (ft.) HOLE	CASING	WATER	ARTESIAN HEAD HEIGHT ABOVE GROUND	FILLED WITH WATER AT END OF DAY
26-Mar-24	08:40	10.00	10.00	6.00		
26-Mar-24	09:30	26.00	10.00	6.00		
26-Mar-24	14:10	79.00	10.00	10.80		
26-Mar-24	15:10	84.00	10.00	13.00		
26-Mar-24	15:15	84.00	OPEN	13.00		

The subsurface information shown here was obtained for design and estimate purposes. It is made available so that users may have access to the same information available to the State. It is presented in good faith. By the nature of the exploration process, the information represents only a small fraction of the total volume of the material at the site. Interpolation between data samples may not be indicative of the actual material encountered.

DRILL RIG OPERATOR Robert Drake; Michael Keleher
SOIL & ROCK DESCRIPTION Jesse O'Dell (ATL)
INSPECTOR Jesse O'Dell (ATL)
BIN
STRUCTURE NAME

CONTRACT D214866 **CONTRACTOR** ATL

SHEET 4 OF 4 HOLE DN-B

TWY-CAN SUBSURF EXPLORATION CD10733 JMT THRUWAY - SAUGERTIES.GPJ TWYSE1TMPL_V05.GDT 8/1/24

This page is an excerpt from the Project Geotech Report prepared by Atlantic Testing Laboratories (ATL) and is included here for reference purpose only. KC Engineering assumes no liability for the information presented in these referenced pages.

SM 282 E 12/02

NEW YORK STATE THRUWAY AUTHORITY
NEW YORK STATE CANAL CORPORATION

SUBSURFACE EXPLORATION LOG

PSN | BORNUM B-3
DIVISION Albany
COUNTY Ulster
PIN
ROUTE Thruway Mainline
MILEPOST 103.16
PROJECT Assignment 2 - NYSTA CR34 over Thruway Mainline Bridge Replacement

HOLE DN-B
LINE NB East Shoulder
STA
OFFSET ft
SURF. ELEV. 159.1205, NAD 88
DEPTH TO WATER

COORDINATES (Lat) 42.108384°N (Long) 73.957309°W
DATE START 3/28/2024 **DATE FINISH** 4/2/2024

AUGER | **WT OF HAMMER-CASING** lb | **HAMMER FALL-CASING** in
CASING O. D. 4-1/2 in I. D. 4 in | **WT OF HAMMER-SAMPLER** 140 lb | **HAMMER FALL-SAMPLER** 30 in
SAMPLER O. D. 2 in I. D. 1-3/8 in | **HAMMER TYPE** Automatic

CASING BLOWS/ft	DEPTH (ft.) BELOW SURFACE	SAMPLE NO.	BLOWS ON SAMPLER (in.) 0/6	6/12	12/18	18/24	MOIST. CONT. (%)	Soil Recovery (in.)	Rock Recovery (ft.)	DESCRIPTION OF SOIL AND ROCK	
	0.0	SS1	7	10	9	7		18		Dark Brown cmf SAND; some Silt & Clay; little cf Gravel; Fill	M - LPL
		SS2	7	10	18	14		14		Dark Brown cf GRAVEL; and cmf Sand; trace Silt & Clay; Fill	M - LPL
	5.0	SS3	7	10	6	7		13		Brown CLAY; some cmf Sand; trace f Gravel; trace Silt; Fill	W - PL
		SS4	13	12	29	27		10		Brown CLAY; and cf Gravel; some cmf Sand; trace Silt; Cobble Fragments; Fill	W - PL
	10.0	SS5	11	14	17	24		7		Brown cf GRAVEL; and cmf Sand; little Silt & Clay; Fill	W - LPL
		SS6	9	7	12	11		15		Brown cf GRAVEL; and cmf Sand; little Silt & Clay; Fill	W - LPL
		SS7	9	7	4	2		9		Brown cmf SAND; some f Gravel; little Silt & Clay; Fill	S - LPL
	15.0	SS8	WH	WR/18"				0		NO RECOVERY	-
	20.0	SS9	16	18	20	14		8		Brown cf GRAVEL; some cmf Sand; trace clayey Silt; Fill	S - LPL
	25.0	SS10	2	4				18		Brown CLAY & SILT; trace f Sand	W - PL

The subsurface information shown here was obtained for design and estimate purposes. It is made available so that users may have access to the same information available to the State. It is presented in good faith. By the nature of the exploration process, the information represents only a small fraction of the total volume of the material at the site. Interpolation between data samples may not be indicative of the actual material encountered.

DRILL RIG OPERATOR Robert Drake; Michael Keleher
SOIL & ROCK DESCRIPTION Jesse O'Dell (ATL)
INSPECTOR Jesse O'Dell (ATL)
BIN
STRUCTURE NAME

CONTRACT D214866 **CONTRACTOR** ATL

SHEET 1 OF 6 HOLE DN-B

TWY-CAN SUBSURF EXPLORATION CD10733 JMT THRUWAY - SAUGERTIES.GPJ TWYSE1TMPL_V05.GDT 8/1/24

This page is an excerpt from the Project Geotech Report prepared by Atlantic Testing Laboratories (ATL) and is included here for reference purpose only. KC Engineering assumes no liability for the information presented in these referenced pages.

SM 282 E 12/02

NEW YORK STATE THRUWAY AUTHORITY
NEW YORK STATE CANAL CORPORATION

SUBSURFACE EXPLORATION LOG

PSN | BORNUM B-3
DIVISION Albany
COUNTY Ulster
PIN
ROUTE Thruway Mainline
MILEPOST 103.16
PROJECT Assignment 2 - NYSTA CR34 over Thruway Mainline Bridge Replacement

HOLE DN-B
LINE NB East Shoulder
STA
OFFSET ft
SURF. ELEV. 159.1205, NAD 88
DEPTH TO WATER

COORDINATES (Lat) 42.108384°N (Long) 73.957309°W
DATE START 3/28/2024 **DATE FINISH** 4/2/2024

AUGER
CASING O. D. 4-1/2 in I. D. 4 in
SAMPLER O. D. 2 in I. D. 1-3/8 in

WT OF HAMMER-CASING lb **HAMMER FALL-CASING** in
WT OF HAMMER-SAMPLER 140 lb **HAMMER FALL-SAMPLER** 30 in
HAMMER TYPE Automatic

CASING BLOWS/ft	DEPTH (ft.) BELOW SURFACE	SAMPLE NO.	BLOWS ON SAMPLER (in.) 0/6	6/12	12/18	18/24	MOIST. CONT. (%)	Soil Recovery (in.)	Rock Recovery (ft.)	DESCRIPTION OF SOIL AND ROCK	
	25.0				4	7					
	30.0	SS11	2	2	2	4		24		Brown CLAY; trace f Sand; trace SILT	M - PL
	35.0	SS12	WR	WH/18"			45.4%	24		Greyish-Brown CLAY; trace mf Sand; trace SILT LL = 46, PL = 23, PI = 23	W - PL
	40.0	SS13	WR/24"				53.3%	24		Grey CLAY; trace f Sand; trace SILT	W - PL
	45.0	SS14	WR/24"				50.6%	24		Greyish-Brown CLAY & SILT; trace f Sand	W - PL
	50.0	SS15	WR/24"				52.7%	24		Greyish-Brown Silty CLAY; trace f Sand	W - PL

The subsurface information shown here was obtained for design and estimate purposes. It is made available so that users may have access to the same information available to the State. It is presented in good faith. By the nature of the exploration process, the information represents only a small fraction of the total volume of the material at the site. Interpolation between data samples may not be indicative of the actual material encountered.

DRILL RIG OPERATOR Robert Drake; Michael Keleher
SOIL & ROCK DESCRIPTION Jesse O'Dell (ATL)
INSPECTOR Jesse O'Dell (ATL)
BIN
STRUCTURE NAME

CONTRACT D214866 **CONTRACTOR** ATL

SHEET 2 OF 6 HOLE DN-B

TWY-CAN SUBSURF EXPLORATION CD10733.JMT THRUWAY - SAUGERTIES.GPJ TWYSE1TMPL_V05.GDT 8/1/24

This page is an excerpt from the Project Geotech Report prepared by Atlantic Testing Laboratories (ATL) and is included here for reference purpose only. KC Engineering assumes no liability for the information presented in these referenced pages.

SM 282 E 12/02

NEW YORK STATE THRUWAY AUTHORITY
NEW YORK STATE CANAL CORPORATION

SUBSURFACE EXPLORATION LOG

PSN | BORNUM B-3
DIVISION Albany
COUNTY Ulster
PIN
ROUTE Thruway Mainline
MILEPOST 103.16
PROJECT Assignment 2 - NYSTA CR34 over Thruway Mainline Bridge Replacement

HOLE DN-B
LINE NB East Shoulder
STA
OFFSET ft
SURF. ELEV. 159.1205, NAD 88
DEPTH TO WATER

COORDINATES (Lat) 42.108384°N (Long) 73.957309°W
DATE START 3/28/2024 **DATE FINISH** 4/2/2024

AUGER
CASING O. D. 4-1/2 in I. D. 4 in
SAMPLER O. D. 2 in I. D. 1-3/8 in

WT OF HAMMER-CASING lb **HAMMER FALL-CASING** in
WT OF HAMMER-SAMPLER 140 lb **HAMMER FALL-SAMPLER** 30 in
HAMMER TYPE Automatic

CASING BLOWS/ft	DEPTH (ft.) BELOW SURFACE	SAMPLE NO.	BLOWS ON SAMPLER (in.) 0/6 6/12 12/18 18/24	MOIST. CONT. (%)	Soil Recovery (in.)	Rock Recovery (ft.)	DESCRIPTION OF SOIL AND ROCK	
	50.0							
		SS16	WR/24"		24		Greyish-Brown Silty CLAY; trace f Sand	W - PL
	55.0							
		SS17	WR/24"		24		Grey CLAY; trace f Sand; trace SILT	W - PL
	60.0							
		SS18	WR/24"		24		Grey CLAY; trace f Sand; trace SILT	W - PL
	65.0							
		SS19	WR/24"		24		Grey CLAY; trace f Sand; trace SILT	W - PL
	70.0							
		SS20	WR/24"	44.7%	24		Grey CLAY; trace f Sand; trace SILT LL = 60, PL = 30, PI = 30	S - PL
	75.0							

The subsurface information shown here was obtained for design and estimate purposes. It is made available so that users may have access to the same information available to the State. It is presented in good faith. By the nature of the exploration process, the information represents only a small fraction of the total volume of the material at the site. Interpolation between data samples may not be indicative of the actual material encountered.

DRILL RIG OPERATOR Robert Drake; Michael Keleher
SOIL & ROCK DESCRIPTION Jesse O'Dell (ATL)
INSPECTOR Jesse O'Dell (ATL)
BIN
STRUCTURE NAME

CONTRACT D214866 **CONTRACTOR** ATL

SHEET 3 OF 6 HOLE DN-B

TWY-CAN SUBSURF EXPLORATION CD10733.JMT THRUWAY - SAUGERTIES.GPJ TWYSE1TMPL_V05.GDT 8/1/24

This page is an excerpt from the Project Geotech Report prepared by Atlantic Testing Laboratories (ATL) and is included here for reference purpose only. KC Engineering assumes no liability for the information presented in these referenced pages.

SM 282 E 12/02

NEW YORK STATE THRUWAY AUTHORITY
NEW YORK STATE CANAL CORPORATION

SUBSURFACE EXPLORATION LOG

PSN | BORNUM B-3
DIVISION Albany
COUNTY Ulster
PIN
ROUTE Thruway Mainline
MILEPOST 103.16
PROJECT Assignment 2 - NYSTA CR34 over Thruway Mainline Bridge Replacement

HOLE DN-B
LINE NB East Shoulder
STA
OFFSET ft
SURF. ELEV. 159.1205, NAD 88
DEPTH TO WATER

COORDINATES (Lat) 42.108384°N (Long) 73.957309°W
DATE START 3/28/2024 **DATE FINISH** 4/2/2024

AUGER
CASING O. D. 4-1/2 in I. D. 4 in
SAMPLER O. D. 2 in I. D. 1-3/8 in

WT OF HAMMER-CASING lb **HAMMER FALL-CASING** in
WT OF HAMMER-SAMPLER 140 lb **HAMMER FALL-SAMPLER** 30 in
HAMMER TYPE Automatic

CASING BLOWS/ft	DEPTH (ft.) BELOW SURFACE	SAMPLE NO.	BLOWS ON SAMPLER (in.) 0/6 6/12 12/18 18/24	MOIST. CONT. (%)	Soil Recovery (in.)	Rock Recovery (ft.)	DESCRIPTION OF SOIL AND ROCK	
	75.0							
		SS21	WR/24"		24		Grey Silty CLAY; trace f Sand	S - PL
	80.0							
		SS22	WR/24"		24		Grey CLAY; trace f Sand; trace SILT	W - LPL
	85.0							
		SS23	WR/24"		24		Grey CLAY; trace f Sand; trace SILT	S - PL
	90.0							
		SS24	WR/24"		12		Grey CLAY; trace f Sand; trace SILT	S - PL
	95.0							
		SS25	WR/24"		24		Grey CLAY; trace f Sand; trace SILT	S - PL
	100.0							

The subsurface information shown here was obtained for design and estimate purposes. It is made available so that users may have access to the same information available to the State. It is presented in good faith. By the nature of the exploration process, the information represents only a small fraction of the total volume of the material at the site. Interpolation between data samples may not be indicative of the actual material encountered.

DRILL RIG OPERATOR Robert Drake; Michael Keleher
SOIL & ROCK DESCRIPTION Jesse O'Dell (ATL)
INSPECTOR Jesse O'Dell (ATL)
BIN
STRUCTURE NAME

CONTRACT D214866 **CONTRACTOR** ATL

SHEET 4 OF 6 HOLE DN-B

TWY-CAN SUBSURF EXPLORATION CD10733.JMT THRUWAY - SAUGERTIES.GPJ TWYSE1TMPL_V05.GDT 8/1/24

This page is an excerpt from the Project Geotech Report prepared by Atlantic Testing Laboratories (ATL) and is included here for reference purpose only. KC Engineering assumes no liability for the information presented in these referenced pages.

SM 282 E 12/02

NEW YORK STATE THRUWAY AUTHORITY
NEW YORK STATE CANAL CORPORATION

SUBSURFACE EXPLORATION LOG

PSN | BORNUM B-3
DIVISION Albany
COUNTY Ulster
PIN
ROUTE Thruway Mainline
MILEPOST 103.16
PROJECT Assignment 2 - NYSTA CR34 over Thruway Mainline Bridge Replacement

HOLE DN-B
LINE NB East Shoulder
STA
OFFSET ft
SURF. ELEV. 159.1205, NAD 88
DEPTH TO WATER

COORDINATES (Lat) 42.108384°N (Long) 73.957309°W
DATE START 3/28/2024 **DATE FINISH** 4/2/2024

AUGER
CASING O. D. 4-1/2 in I. D. 4 in
SAMPLER O. D. 2 in I. D. 1-3/8 in

WT OF HAMMER-CASING lb **HAMMER FALL-CASING** in
WT OF HAMMER-SAMPLER 140 lb **HAMMER FALL-SAMPLER** 30 in
HAMMER TYPE Automatic

CASING BLOWS/ft	DEPTH (ft.) BELOW SURFACE	SAMPLE NO.	BLOWS ON SAMPLER (in.) 0/6 6/12 12/18 18/24	MOIST. CONT. (%)	Soil Recovery (in.)	Rock Recovery (ft.)	DESCRIPTION OF SOIL AND ROCK	
	100.0							
		SS26	WR/24"		24		Grey CLAY; trace f Sand; trace SILT	S - PL
	105.0							
		SS27	WR/24"		24		Grey CLAY; trace f Sand; trace SILT	S - PL
	110.0							
		SS28	WR/24"		24		Grey CLAY; trace f Sand; trace SILT	S - PL
	115.0							
		SS29	WR/24"		24		Grey CLAY; trace f Sand; trace SILT	S - PL
	120.0							
		SS30	WR/24"		24		Grey CLAY; trace f Sand; trace SILT	S - PL
	125.0							

The subsurface information shown here was obtained for design and estimate purposes. It is made available so that users may have access to the same information available to the State. It is presented in good faith. By the nature of the exploration process, the information represents only a small fraction of the total volume of the material at the site. Interpolation between data samples may not be indicative of the actual material encountered.

DRILL RIG OPERATOR Robert Drake; Michael Keleher
SOIL & ROCK DESCRIPTION Jesse O'Dell (ATL)
INSPECTOR Jesse O'Dell (ATL)
BIN
STRUCTURE NAME

CONTRACT D214866 **CONTRACTOR** ATL

SHEET 5 OF 6 HOLE DN-B

TWY-CAN SUBSURF EXPLORATION CD10733.JMT THRUWAY - SAUGERTIES.GPJ TWYSE1TMPL_V05.GDT 8/1/24

This page is an excerpt from the Project Geotech Report prepared by Atlantic Testing Laboratories (ATL) and is included here for reference purpose only. KC Engineering assumes no liability for the information presented in these referenced pages.

SM 282 E 12/02

NEW YORK STATE THRUWAY AUTHORITY
NEW YORK STATE CANAL CORPORATION

SUBSURFACE EXPLORATION LOG

PSN | BORNUM B-3
DIVISION Albany
COUNTY Ulster
PIN
ROUTE Thruway Mainline
MILEPOST 103.16
PROJECT Assignment 2 - NYSTA CR34 over Thruway Mainline Bridge Replacement

HOLE DN-B
LINE NB East Shoulder
STA
OFFSET ft
SURF. ELEV. 159.1205, NAD 88
DEPTH TO WATER

COORDINATES (Lat) 42.108384°N (Long) 73.957309°W
DATE START 3/28/2024 **DATE FINISH** 4/2/2024

AUGER
CASING O. D. 4-1/2 in I. D. 4 in
SAMPLER O. D. 2 in I. D. 1-3/8 in

WT OF HAMMER-CASING lb **HAMMER FALL-CASING** in
WT OF HAMMER-SAMPLER 140 lb **HAMMER FALL-SAMPLER** 30 in
HAMMER TYPE Automatic

CASING BLOWS/ft	DEPTH (ft.) BELOW SURFACE	SAMPLE NO.	BLOWS ON SAMPLER (in.) 0/6	6/12	12/18	18/24	MOIST. CONT. (%)	Soil Recovery (in.)	Rock Recovery (ft.)	DESCRIPTION OF SOIL AND ROCK
	125.0									Advanced 3 7/8" tri-cone roller bit to 130.0 feet. Encountered bedrock at 130.0 feet, however borehole caved and casing broke before rock was able to be cored.
	130.0									

BOTTOM OF HOLE AT 130.00 ft

Notes:
1. Borehole backfilled with on-site soils.

DATE	TIME	DEPTH (ft.) HOLE	CASING	WATER	ARTESIAN HEAD HEIGHT ABOVE GROUND	FILLED WITH WATER AT END OF DAY
28-Mar-24	12:00	14.00	14.00	5.00		
29-Mar-24	08:00	14.00	14.00	DRY		
29-Mar-24	12:30	CAVED	25.00	DRY		
02-Apr-24	08:00	126.00	25.00	36.00		

The subsurface information shown here was obtained for design and estimate purposes. It is made available so that users may have access to the same information available to the State. It is presented in good faith. By the nature of the exploration process, the information represents only a small fraction of the total volume of the material at the site. Interpolation between data samples may not be indicative of the actual material encountered.

DRILL RIG OPERATOR Robert Drake; Michael Keleher
SOIL & ROCK DESCRIPTION Jesse O'Dell (ATL)
INSPECTOR Jesse O'Dell (ATL)
BIN
STRUCTURE NAME

CONTRACT D214866 **CONTRACTOR** ATL

SHEET 6 OF 6 HOLE DN-B

TWY-CAN SUBSURF EXPLORATION CD10733 JMT THRUWAY - SAUGERTIES.GPJ TWYSE1TMPL_V05.GDT 8/1/24

ROCK CORE PHOTOGRAPHIC LOG

Photograph

This page is an excerpt from the Project Geotech Report prepared by Atlantic Testing Laboratories (ATL) and is included here for reference purpose only. KC Engineering assumes no liability for the information presented in these referenced pages.

LABORATORY TEST RESULTS

This page is an excerpt from the Project Geotech Report prepared by Atlantic Testing Laboratories (ATL) and is included here for reference purpose only. KC Engineering assumes no liability for the information presented in these referenced pages.

ATLANTIC TESTING LABORATORIES

WBE certified company

LABORATORY DETERMINATION OF MOISTURE CONTENT OF SOILS
ASTM D 2216

PROJECT INFORMATION

Client:	JMT of New York INC.	**ATL Report No.:**	CD10733SL-01-04-24
Project:	NYSTA CR34 over Thruway mainline Bridge Replace	**Report Date:**	July 30, 2024
		Date Received:	July 24, 2024

TEST DATA

Boring No.	Sample No.	Depth (ft)	Moisture Content (%)
B-1	S - 2	2.0 - 4.0	6.5
	S - 3	4.0 - 6.0	29.0
	S - 4	6.0 - 8.0	34.2
	S - 5	8.0 - 10.0	42.0
	S - 6	10.0 - 12.0	47.3
	S - 8	14.0 - 16.0	47.5
	S - 9	19.0 - 21.0	64.7
	S - 10	24.0 - 26.0	67.4
	S - 11	29.0 - 31.0	55.1
	S - 12	34.0 - 36.0	39.4
B-2	S - 2	2.0 - 4.0	20.6
	S - 3	4.0 - 6.0	32.5
	S - 4	6.0 - 8.0	32.3
	S - 5	8.0 - 10.0	40.1
	S - 6	10.0 - 10.8	49.1
B-3	S - 12	34.0 - 36.0	45.4
	S - 13	39.0 - 41.0	53.3
	S - 14	44.0 - 46.0	50.6
	S - 15	49.0 - 51.0	52.7
	S - 20	74.0 - 76.0	44.7

REMARKS

1. Sample mass was less than the minimum mass outlined in the referenced test method.

Reviewed By: _____ Date: 7/30/2024

This page is an excerpt from the Project Geotech Report prepared by Atlantic Testing Laboratories (ATL) and is included here for reference purpose only. KC Engineering assumes no liability for the information presented in these referenced pages.

ATLANTIC TESTING LABORATORIES

Particle Size Distribution Report

ASTM D 422

Project: NYSTA CR34 over Thruway mainline Bridge Replace **Report No.:** CD10733SL-01-04-24

Client: JMT of New York INC. **Test Date:** 4/15/2024

Sample No: B-1, S-3 **Source of Sample:** Boring Sample

Location: In-place **Elev./Depth (ft):** 4.0 - 6.0

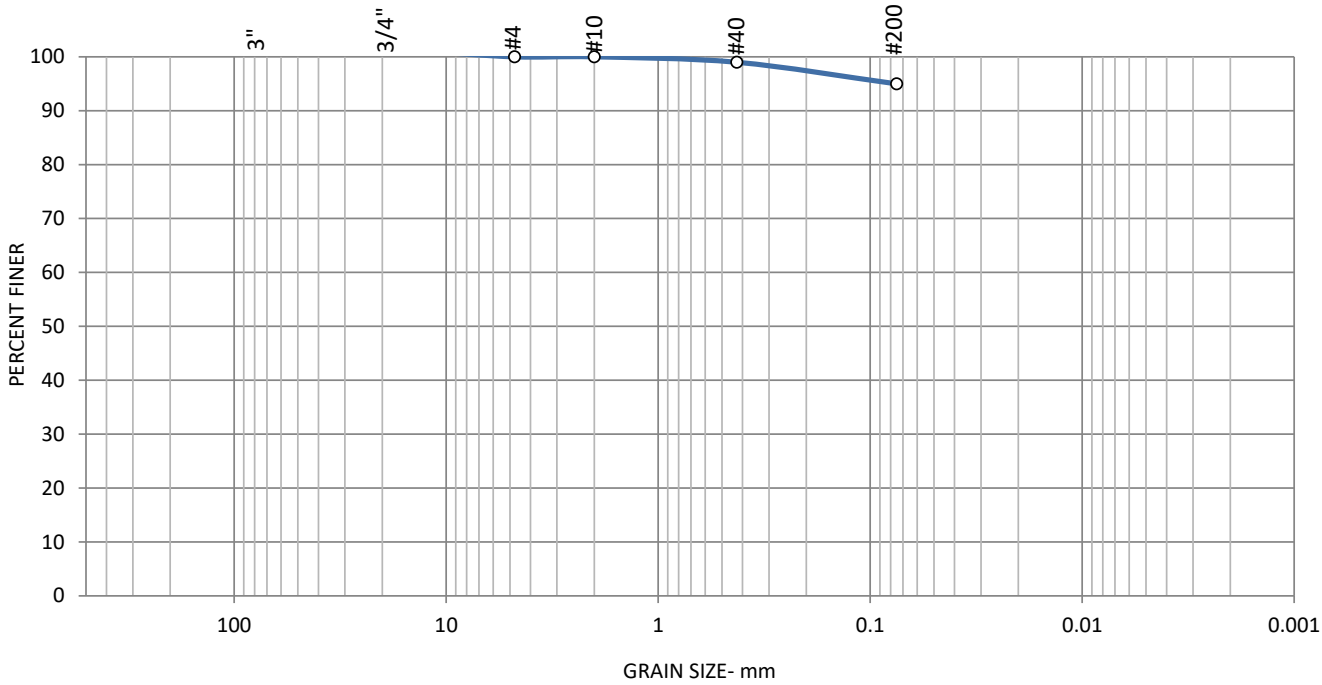

% Cobbles	% Gravel		% Sand			% Fines	
						95	
	Coarse	Fine	Coarse	Medium	Fine	Silt	Clay
				1	4		

SIEVE SIZE	PERCENT FINER	SPEC. PERCENT	OUT OF SPEC.
4"			
3"			
2"			
1"			
3/4"			
1/2"			
#4	100		
#10	100		
#40	99		
#200	95		

Soil Description

Brownish-Grey CLAY; trace mf Sand; trace Organic Material (root hairs)

Moisture Content = 29.0%

Atterburg Limits

PL= LL= PI=

Coefficients

D_{60}= D_{30}= D_{10}=

C_u= NA C_c= NA

Classification

USCS= AASHTO=

Remarks

ATLANTIC TESTING LABORITORIES, LIMITED

Reviewed by: Date: 7/30/2024

This page is an excerpt from the Project Geotech Report prepared by Atlantic Testing Laboratories (ATL) and is included here for reference purpose only. KC Engineering assumes no liability for the information presented in these referenced pages.

ATLANTIC TESTING LABORATORIES

Particle Size Distribution Report

ASTM D 422

Project: NYSTA CR34 over Thruway mainline Bridge Replace **Report No.:** CD10733SL-01-04-24

Client: JMT of New York INC. **Test Date:** 4/15/2024

Sample No: B-2, S-2 **Source of Sample:** Boring Sample

Location: In-place **Elev./Depth (ft):** 2.0 - 4.0

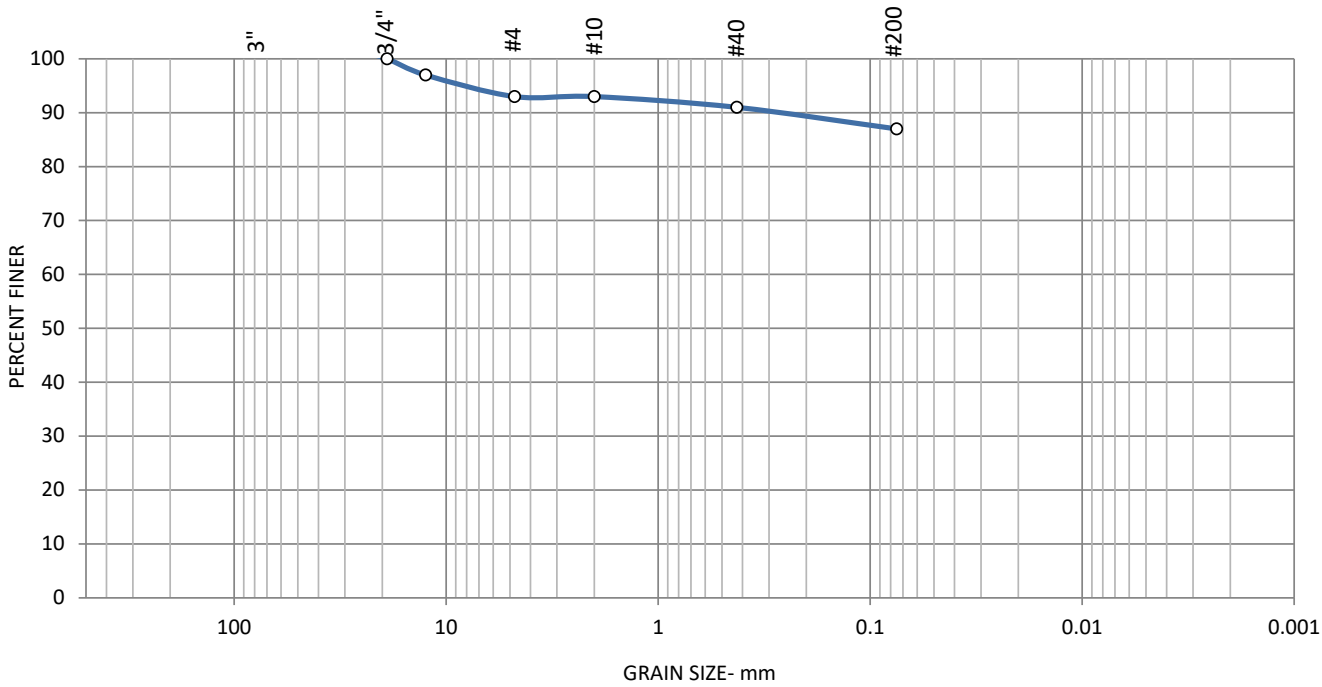

% Cobbles	% Gravel		% Sand			% Fines	
						87	
	Coarse	Fine	Coarse	Medium	Fine	Silt	Clay
		7	0	2	4		

SIEVE SIZE	PERCENT FINER	SPEC. PERCENT	OUT OF SPEC.
4"			
3"			
2"			
1"			
3/4"	100		
1/2"	97		
#4	93		
#10	93		
#40	91		
#200	87		

Soil Description

Brown Silty CLAY; trace f Gravel; trace mf Sand

Moisture Content = 20.6%

Atterburg Limits

PL= LL= PI=

Coefficients

D_{60}= D_{30}= D_{10}=

C_u= NA C_c= NA

Classification

USCS= AASHTO=

Remarks

ATLANTIC TESTING LABORITORIES, LIMITED

Reviewed by: Date: 7/30/2024

This page is an excerpt from the Project Geotech Report prepared by Atlantic Testing Laboratories (ATL) and is included here for reference purpose only. KC Engineering assumes no liability for the information presented in these referenced pages.

ATLANTIC TESTING LABORATORIES

WBE certified company

LIQUID LIMIT, PLASTIC LIMIT, AND PLASTICITY INDEX OF SOIL
ASTM D 4318

PROJECT INFORMATION

Client: JMT of New York Inc.
Project: NYSTA CR34 over Thruway Mainline Bridge Replacement

ATL Report No.: CD10733SL-01-04-24
Report Date: July 30, 2024
Date Received: July 24, 2024

TEST DATA

Boring No.	Sample No.	As Received Moisture Content (%)	LL	PL	PI
B-1	S-8	47.5	47	21	26
B-1	S-12	39.4	43	19	24
B-3	S-12	45.4	46	23	23
B-3	S-20	44.7	60	30	30

SAMPLE INFORMATION

Boring No.	Sample No.	Maximum Grain Size (mm)	Estimated Amount of Sample Retained on No. 40 Sieve (%)	Preparation	Method of Removing Oversized Material
B-1	S-8	0.3	0	Wet	Hand Picking
B-1	S-12	0.3	0	Wet	Hand Picking
B-3	S-12	0.3	0	Wet	Hand Picking
B-3	S-20	2	0	Wet	Hand Picking

EQUIPMENT INFORMATION

Liquid Limit Procedure:	Multipoint - Method A	X	Single Point - Method B	
Liquid Limit Apparatus:	Manual	X	Motor Driven	
Liquid Limit Grooving Tool Material:	Plastic	X	Metal	
Liquid Limit Grooving Tool Shape:	Flat	X	Curved (AASHTO Only)	
Plastic Limit:	Hand Rolled	X	Mechanical Rolling Device	

Reviewed By: _____ Date: 7/30/2024

This page is an excerpt from the Project Geotech Report prepared by Atlantic Testing Laboratories (ATL) and is included here for reference purpose only. KC Engineering assumes no liability for the information presented in these referenced pages.

ATLANTIC TESTING LABORATORIES

WBE certified company

PROJECT INFORMATION

Client: JMT of New York Inc.
Project: NYSTA CR34 over Thruway Mainline Bridge Replacement

ATL Report No.: CD10733SL-02-01-25
Report Date: January 14, 2025

UNCONFINED COMPRESSIVE STRENGTH OF INTACT ROCK CORE SPECIMENS

ASTM D 7012, Method C

Core ID	Depth (ft)	Diameter (in)	Length (in)	Load Rate (psi/sec)	Total Load (lbs)	Area (in^2)	Compressive Strength (psi)	Calculated Density (pcf)
B-1; Run 1	59.4-59.7	1.97	4.03	80	48672	3.05	15,960	170.8
B-2; Run 1	80.8-81.1	1.97	3.99	80	51,288	3.05	16,820	172.8

Failure Pictures

B-1; Run 1

B-2; Run 1

Reviewed By: _____ Date: _____

APPENDIX B – SUBSURFACE EVALUATION

Soil Properties Determination

SPT Corrections

Engineering and Land Surveying, P.C

Project:	Malden Turnpike Bridge West Abutment	Computed:	HE	Date:	9/3/2025
Subject:	Soil Parameters	Checked:		Date:	9/3/2025
Task:	Determine soil properties for the design of the West Abutment	Page:		of:	
Job #:		No:			

Boring Tag:	**B-1**	
Ground Surf. Elevation (ft):	**143.5**	
Water Elevation (ft):	**136.8**	
Borehole diameter (in):		
SPT Hammer Energy Ratio:	**0.8**	(For Automatic Hammer)

Layer	Depth at bottom of layer (ft)	Approx. Elevation		Soil	Plasticity	Average Measured SPT ($N_{measured}$)	Energy Correction Factor (C_E)[1]	N_{60} (bpf)				γ' (pcf)	σ'_v (psf)	Other SPT Correction Factors[1]			$N^*_{1,60}$ (bpf)	NYSDOT GDM-8		Design Soil Properties			Design Rock Properties				Lateral Soil Model[4]		
		From	To						γ (pcf)	φ (deg)	c (psf)			Overburden Correction Factor (C_N)	Rod Length Correction Factor (C_R)	Borehole Dia Correction Factor (C_B)		φ^2 (deg)	c^3 (psf)	γ (pcf)	φ (deg)	c (psf)	q_u (psi)	Strain Factor K rm	Initial Mod of Rock Mass (psi)	RQD %	Soil Model	Soil Modulus Parameter K	Soil Strain Parameter E50
1	4	143.5	139.5	COHESIVE	Low	25	1.33	33	135	0	4000	135	270	1.6	0.87	1	46	0	2475	130	0	4000					Stiff Clay w/o Water (Reese)	2000	0.004
2	10	139.5	133.5	COHESIVE	High	6	1.33	8	125	0	1000	62.6	459	1.6	0.93	1	12	0	1200	120	0	1000					Stiff Caly with Water (Reese)	100	0.01
3	57	133.5	86.5	COHESIVE	High	0	1.33	0	100	0	100	37.6	1343	1.2	1.00	1	0	0	0	100	0	250					Soft Clay (Matlock)	30	0.02
4	62	86.5	81.5	ROCK	-	100	1.33	133	135	0	4000	72.6	1526	1.1	1.00	1	153	0	4000	150	0	0	15000			55	Weak Rock (Reese)	2000	0.004
5																													
6																													
7																													
8																													

1. SPT Correction factors are based on NYSDOT GDM Section 8.4.1
2. NYSDOT GDM Equation 8-41: $\phi' = (15.4N^*_{1,60})^{0.5} + 20^\circ$
3. NYSDOT GDM Equation 8-30 for low plastic clay $\tau = C = 0.075N_{60}$ and Equation 8-31 for medium to high plastic clay $\tau = C = 0.15N_{60}$
4. Soil parameters for lateral soil model are based on LPILE v2022 User's Manual

Engineering and Land Surveying, P.C.

Project: Malden Turnpike Bridge East Abutment	Computed: HE	Date:	9/3/2025
Subject: Soil Parameters	Checked:	Date:	9/3/2025
Task: Determine soil properties for the design of the East Abutment	Page:	of:	
Job #:	No:		

Boring Tag:	**B-3**	
Ground Surf. Elevation (ft):	**159.1**	
Water Elevation (ft):	**138.6**	
Borehole diameter (in):		
SPT Hammer Energy Ratio:	**0.8**	(For Automatic Hammer)

Layer	Depth at bottom of layer (ft)	Approx. Elevation		Soil	Plasticity	Average Measured SPT ($N_{measured}$)	Energy Correction Factor (C_E)[1]	N_{60} (bpf)				γ' (pcf)	σ'_v (psf)	Other SPT Correction Factors[1]			$N^*_{1,60}$ (bpf)	NYSDOT GDM-8		Design Soil Properties			Design Rock Properties				Lateral Soil Model[4]		
		From	To						γ (pcf)	φ (deg)	c (psf)			Overburden Correction Factor (C_N)	Rod Length Correction Factor (C_R)	Borehole Dia Correction Factor (C_B)		φ[2] (deg)	c[3] (psf)	γ (pcf)	φ (deg)	c (psf)	q_u (psi)	Strain Factor K rm	Initial Mod of Rock Mass (psi)	RQD %	Soil Model	Soil Modulus Parameter K	Soil Strain Parameter E50
1	4	159.1	155.1	COHESIONLESS	Low	24	1.33	32	130	34	0	130	260	1.6	0.87	1	45	40	0	130	32	0					Sand (Reese)	225	
2	8	155.1	151.1	COHESIVE	High	16	1.33	21	130	0	2800	130	520	1.6	0.91	1	31	0	3150	130	0	3000					Stiff Clay w/o Water (Reese)	1000	0.005
3	14	151.1	145.1	COHESIONLESS	Low	15	1.33	20	123	31	0	122.5	888	1.5	0.96	1	29	38	0	125	32	0					Sand (Reese)	90	
4	19	145.1	140.1	COHESIONLESS	-	0	1.33	0	100	26	0	100	1138	1.3	0.97	1	0	20	0	100	26	0					Sand (Reese)	25	-
5	24	140.1	135.1	COHESIONLESS	Low	38	1.33	51	135	36	0	72.7	1319	1.2	0.98	1	61	40	0	130	36	0					Sand (Reese)	125	-
6	34	135.1	125.1	COHESIVE	High	6	1.33	8	125	0	1000	62.6	1632	1.1	0.99	1	9	0	1200	120	0	750					Stiff Caly with Water (Reese)	100	0.01
7	130	125.1	29.1	COHESIVE	High	0	1.33	0	100	0	100	37.6	3437	0.8	1.00	1	0	0	0	100	0	250					Soft Clay (Matlock)	30	0.02
8																													

1. SPT Correction factors are based on NYSDOT GDM Section 8.4.1
2. NYSDOT GDM Equation 8-41: $\phi' = (15.4N^*_{1,60})^{0.5} + 20^\circ$
3. NYSDOT GDM Equation 8-30 for low plastic clay $\tau = C = 0.075N_{60}$ and Equation 8-31 for medium to high plastic clay $\tau = C = 0.15N_{60}$
4. Soil parameters for lateral soil model are based on LPILE v2022 User's Manual

Engineering and Land Surveying, P.C

Project:	Malden Turnpike Bridge	Computed:	HE	Date:	9/3/2025
Subject:	Soil Parameters	Checked:		Date:	9/3/2025
Task:	Determine soil properties for the design of the Center Pier	Page:		of:	
Job #:		No:			

Boring Tag:	**B-2**	
Ground Surf. Elevation (ft):	**143.0**	
Water Elevation (ft):	**133.0**	
Borehole diameter (in):		
SPT Hammer Energy Ratio:	**0.8**	(For Automatic Hammer)

Layer	Depth at bottom of layer (ft)	Approx. Elevation		Soil	Plasticity	Average Measured SPT ($N_{measured}$)	Energy Correction Factor (C_E)[1]	N_{60} (bpf)				γ' (pcf)	σ'_v (psf)	Other SPT Correction Factors[1]			$N^*_{1,60}$ (bpf)	NYSDOT GDM-8		Design Soil Properties			Design Rock Properties				Lateral Soil Model[4]		
		From	To						γ (pcf)	φ (deg)	c (psf)			Overburden Correction Factor (C_N)	Rod Length Correction Factor (C_R)	Borehole Dia Correction Factor (C_B)		φ^2 (deg)	c^3 (psf)	γ (pcf)	φ (deg)	c (psf)	q_u (psi)	Strain Factor K rm	Initial Mod of Rock Mass (psi)	RQD %	Soil Model	Soil Modulus Parameter K	Soil Strain Parameter E50
1	8	143.0	135.0	COHESIVE	Low	11	1.33	15	130	0	2000	130	520	1.6	0.91	1	21	0	1125	125	0	1500					Stiff Clay w/o Water (Reese)	500	0.007
2	10	139.5	133.0	COHESIVE	High	4	1.33	5	120	0	600	120	908	1.5	0.93	1	7	0	750	120	0	500					Soft Clay (Matlock)	100	0.01
3	79	133.5	64.0	COHESIVE	High	0	1.33	0	100	0	100	37.6	2214	1.0	1.00	1	0	0	0	100	0	250					Soft Clay (Matlock)	30	0.02
4	90	86.5	53.0	ROCK	-	100	1.33	133	135	0	4000	72.6	3429	0.8	1.00	1	102	0	4000	150	0	0	15000			55	Weak Rock (Reese)	2000	0.004
5																													
6																													
7																													
8																													

1. SPT Correction factors are based on NYSDOT GDM Section 8.4.1
2. NYSDOT GDM Equation 8-41: $\phi' = (15.4N^*_{1,60})^{0.5} + 20^\circ$
3. NYSDOT GDM Equation 8-30 for low plastic clay $\tau = C = 0.075N_{60}$ and Equation 8-31 for medium to high plastic clay $\tau = C = 0.15N_{60}$
4. Soil parameters for lateral soil model are based on LPILE v2022 User's Manual

Many correlations exist that relate the corrected N-values (sampler blow counts) to relative density (D_r), peak effective angle of internal friction (φ'), undrained shear strength (S_u), and other parameters; therefore it is incumbent upon the designer to understand the correlations being used and the requirements of the correlations for corrected N-values. Design methods are also available for using corrected N-values directly in the design of driven piles, embankments, spread footings, and drilled shafts. N-value corrections are especially important in liquefaction potential assessments (NYSDOT GDM Chapter 9). Design calculations using SPT N-value correlations should be performed using corrected N-values, however, only the actual field SPT blow count (N_{meas}) values should be plotted on the soil logs and profiles depicting the results of SPT borings. Inclusion of the hammer type on the soil logs allows the geotechnical designer to determine the corrected N-values. Each of the corrections is discussed in greater detail in the following sections.

8.4.1.1 Energy Correction (C_E)

Drop hammers used for soil penetration testing and sampling in test borings are typically donut, safety or automatic hammers. The type of hammer used to collect split-spoon samples must be noted on the boring logs. Typically correlations used between soil parameters and N-values are based on a hammer having an energy potential of 60 percent of the theoretical maximum. The energy ratio (ER) is the measured energy divided by the theoretical maximum (i.e. 140-pound hammer dropping 30 inches or 4,200 inch-pounds). A split-spoon sampler advanced with a manual safety hammer will have an approximate energy level of 60 percent (ER ≈ 60%).

Split-spoon samples are also advanced with either an automatic hammer (ER ≈ 90%) or a donut hammer (ER ≈ 45%) **[Reminder:** ***The NYSDOT retrofitted their drill rigs with automatic hammers for safety reasons*****]**. The corrections for the donut hammer are provided for information only because some past projects were performed using the donut hammer. N-values obtained using either the automatic or the donut hammer will require correction prior to being used in engineering analysis. The energy correction factor (C_E) shall be determined using the following equation. Typical C_E values are provided in Table 8-1 for each hammer type. These correction factors should only be used when the actual hammer energy has not been previously measured.

Equation 8-1

$$C_E = \frac{ER}{60}$$

Where ER is the measured energy expressed as an integer (i.e. 90 percent energy is ER = 90).

Hammer Type	Energy Ratio (ER) %	C_E
Automatic	80	1.33
Safety	60	1.00
Donut	45	0.75

Table 8-1 Energy Ratio by Hammer Type (CE)

8.4.1.1.1 NYSDOT Hammer Study

The geotechnical design recommendations prepared by the Geotechnical Engineering Bureau are largely based on the information obtained by progressing subsurface explorations. In addition to the actual samples, information regarding the resistance of the soil to sampler driving is also obtained. Historically, the Geotechnical Engineering Bureau has used what is termed as a 300 lb. donut hammer with a drop height of 18 in. to drive the casing and sampler. This method was originally recommended by the Anny Corps of Engineers. It had been used by the New York State Department of Transportation and its predecessor, the Department of Public Works, since 1946. In 2001, it was noted that the industry has adopted the Standard Penetration Test (SPT) to advance the sampler. This consists of driving the sampler with a 140 lb. hammer using a 30 in. drop. This method was officially accepted by ASTM and designated D1586 "Standard Test Method for Penetration Test and Split-Barrel Sampling of Soils".

The Geotechnical Engineering Bureau progressed a hammer study to investigate the differences between the historical method vs. the SPT method of progressing a hole. This study determined, consistent with the work of others, that the ASTM Standard Penetration Test provides results very consistent with those obtained using the 300 lb. donut hammer. The important distinction being that an automatic hammer is used with the SPT. The actual energy imparted through the drill rods to the sampler with the automatic hammer was found to be equal or slightly greater than that transmitted through the drill rods with the 300 lb. donut hammer. For this study, the 140 lb. automatic hammer required approximately 95% of the blows required by the 300 lb. donut hammer when sampling similar soils.

The automatic hammer also provides for increased safety to the user in that it is a "hands free" operation. Numerous injuries have occurred over the years due to the free fall nature of the dropping 300 lb. weight onto an exposed impact plate. The automatic hammer has an enclosed striking point which minimizes the potential for injury.

The Standard Penetration Test (SPT) was adopted in 2002 by the NYSDOT as the standard method for obtaining split-spoon samples for its projects. However, the Departmental Geotechnical Engineer should always check the subsurface exploration log to confirm the hammer type.

8.4.1.2 Overburden Correction (C_N)

N_{meas} values will increase with depth due to increasing overburden pressure. The overburden correction is used to standardize all N-values to a reference overburden pressure. The reference overburden pressure is 1 ton per square foot (tsf) (1 atmosphere). The overburden correction factor (C_N) (Cetin et al., 2004) is provided below.

Equation 8-2

$$C_N = \left(\frac{1}{\sigma'_v}\right)^{0.5} \leq 1.6$$

Where,
C_N = Overburden correction factor
σ'_v = actual effective overburden stress at the depth of the in-situ SPT (atmospheres)

8.4.1.3 Rod Length Correction (C_R)

N_{meas} values measured in the field should be corrected for the length of the rod used to obtain the sample. The original N_{60} value measurements were obtained using long rods (i.e. rod length greater than 33 feet); therefore, a correction to obtain "equivalent" N_{60} values for short rod length (i.e. rod length less than 33 feet) is required. Typically the rod length will be the depth of the sample (d) plus an assumed 7 feet of stick up above the ground surface. The rod length correction factor (C_R) equation is provided below with typical values presented in Table 8-2 (McGregor and Duncan, 1998).

Equation 8-3

$$C_R = e^{-e^{(-0.11d-0.77)}}$$

Where,
C_R = Rod length correction factor
e = Euler's number (constant) ≈ 2.71828183
d = rod length

Rod Length (ft.)	C_R
<13	0.75
13 - 20	0.85
20.1 - 33	0.95
>33	1.00

Table 8-2 Rod Length Correction (C_R)

$$N_{60} = (\frac{ER}{60\%})N \qquad (10.4.6.2.4\text{-}2)$$

where:

N_{60} = *SPT* blow count corrected for hammer efficiency (blows/ft)
ER = hammer efficiency expressed as percent of theoretical free fall energy delivered by the hammer system actually used (dim)
N = uncorrected *SPT* blow count (blows/ft)

When *SPT* blow counts have been corrected for both overburden effects and hammer efficiency effects, the resulting corrected blow count shall be denoted as $N1_{60}$, determined as:

$$N1_{60} = C_N N_{60} \qquad (10.4.6.2.4\text{-}3)$$

The drained friction angle of granular deposits should be determined based on the following correlation.

Table 10.4.6.2.4-1—Correlation of *SPT* $N1_{60}$ Values to Drained Friction Angle of Granular Soils (modified after Bowles, 1977)

$N1_{60}$	ϕ_f
<4	25–30
4	27–32
10	30–35
30	35–40
50	38–43

For gravels and rock fill materials where *SPT* testing is not reliable, Figure 10.4.6.2.4-1 should be used to estimate the drained friction angle.

Rock Fill Grade	Particle Unconfined Compressive Strength (ksf)
A	>4,610
B	3,460–4,610
C	2,590– 3,460
D	1,730– 2,590
E	≤1,730

reflect the greater energy delivered to the sampler by these systems.

Hammer efficiency (*ER*) for specific hammer systems used in local practice may be used in lieu of the values provided. If used, specific hammer system efficiencies shall be developed in general accordance with ASTM D4945 for dynamic analysis of driven piles or other accepted procedure.

The following values for *ER* may be assumed if hammer specific data are not available, e.g., from older boring logs:

ER = 60 percent for conventional drop hammer using rope and cathead
ER = 80 percent for automatic trip hammer

Corrections for rod length, hole size, and use of a liner may also be made if appropriate. In general, these are only significant in unusual cases or where there is significant variation from standard procedures. These corrections may be significant for evaluation of liquefaction. Information on these additional corrections may be found in Youd and Idriss (1997).

The $N1_{60}$-ϕ_f correlation used is modified after Bowles (1977). The correlation of Peck, Hanson, and Thornburn (1974) falls within the ranges specified. Experience should be used to select specific values within the ranges. In general, finer materials or materials with significant silt-sized material will fall in the lower portion of the range. Coarser materials with less than five percent fines will fall in the upper portion of the ranges. The geologic history and angularity of the particles may also need to be considered when selecting a value for ϕ_f.

Care should be exercised when using other correlations of *SPT* results to soil parameters. Some published correlations are based on corrected values ($N1_{60}$) and some are based on uncorrected values (*N*).

The designer should ascertain the basis of the correlation and use either $N1_{60}$ or *N* as appropriate.

Care should also be exercised when using *SPT* blow counts to estimate soil shear strength if in soils with coarse gravel, cobbles, or boulders. Large gravels, cobbles, or boulders could cause the *SPT* blow counts to be unrealistically high.

The secant friction angle derived from the procedure to estimate the drained friction angle of gravels and rock fill materials depicted in Figure 10.4.6.2.4-1 is based on a straight line from the origin of a Mohr diagram to the intersection with the strength envelope at the effective normal stress. Thus, the angle derived is applicable only to analysis of field conditions subject to similar normal stresses. See Terzaghi, Peck, and Mesri (1996) for additional details regarding this procedure.

© 2020 by the American Association of State Highway and Transportation Officials.
All rights reserved. Duplication is a violation of applicable law.

APPENDIX C – SEISMIC ANALYSIS

All References are to AASHTO Guide Specifications for LRFD Seismic Bridge Design, 2nd Edition, 2011.

This section determines the seismic design criteria and evaluates the need for liquefaction analysis based on AASHTO Guide Specification for LRFD Seismic Bridge Design, 2nd Edition, 2011.

Seismic Site Class has been determined based on the Average SPT as per Section 3.4.2.1-1. The average SPT of overburden soil for Boring DN-B-3 is equal to 1.36. As per Section 3.4.2.1-1, the bridge site is 'E'.

Figure 3.4.1-4b was used to determine 1-sec period sectral acceleration coeficient (S1). The seismic Design Category as per Table 3.5-1 is 'B'.

As per Section 3.5, liquefaction assesment is recommended in certain conditions. Our review of the boring logs indicate the absence of loose to very loose sands. Additionally, the project site is subjected to limited seismic activity. Therefore, liquefaction assesment is not required as per Section 6.8.

1-2 AASHTO GUIDE SPECIFICATIONS FOR LRFD SEISMIC BRIDGE DESIGN

SDC B

- Implicit displacement capacity check required (i.e., use a closed form solution formula)
- Capacity checks suggested
- SDC B level of detailing
- Liquefaction assessment recommended for certain conditions

SECTION 6: FOUNDATION AND ABUTMENT DESIGN

Where loose to very loose saturated sands are within the subsurface soil profile such that liquefaction of these soils could impact the stability of the structure, the potential for liquefaction in SDC B should also be considered as discussed in the commentary.

For sites that require an assessment of liquefaction, the potential effects of liquefaction on soils and foundations shall be evaluated. The assessment shall consider the following effects of liquefaction:

All References are to AASHTO Guide Specifications for LRFD Seismic Bridge Design, 2nd Edition, 2011.

Seismic Site Classification (Section 3.4.2.1-1)

Enter SPT Value of Upper 100ft from the boring:

Boring DM-B-3			
Sample	SPT N (bpf)	Soil layer thickness d (ft)	d/N
1	19	2	0.105
2	28	2	0.071
3	16	2	0.125
4	41	2	0.049
5	31	2	0.065
6	19	2	0.105
7	11	2	0.182
8	1	5	5.000
9	38	5	0.132
10	8	5	0.625
11	4	5	1.250
12	1	5	5.000
13	1	5	5.000
14	1	5	5.000
15	1	5	5.000
16	1	5	5.000
17	1	5	5.000
18	1	5	5.000
19	1	5	5.000
20	1	5	5.000
21	1	5	5.000
22	1	5	5.000
23	1	5	5.000
24	1	5	5.000
25	1	1	1.000
	Sum:	100	73.709

SPT_{avg} =	1.36

Site Class:	E

Seismic Ground Motion

S_1 =	0.045	(Mapped 1-sec period sectral acceleration coeficient, Figure 3.4.1-4b)
F_v =	3.5	(Table 3.4.2.3-2)
S_{D1} =	0.16	(1-sec period design spectral acceleration, $S_{D1} = F_v*S_1$)

SDC:	B	(Seismic Design Category, Table 3.5-1)

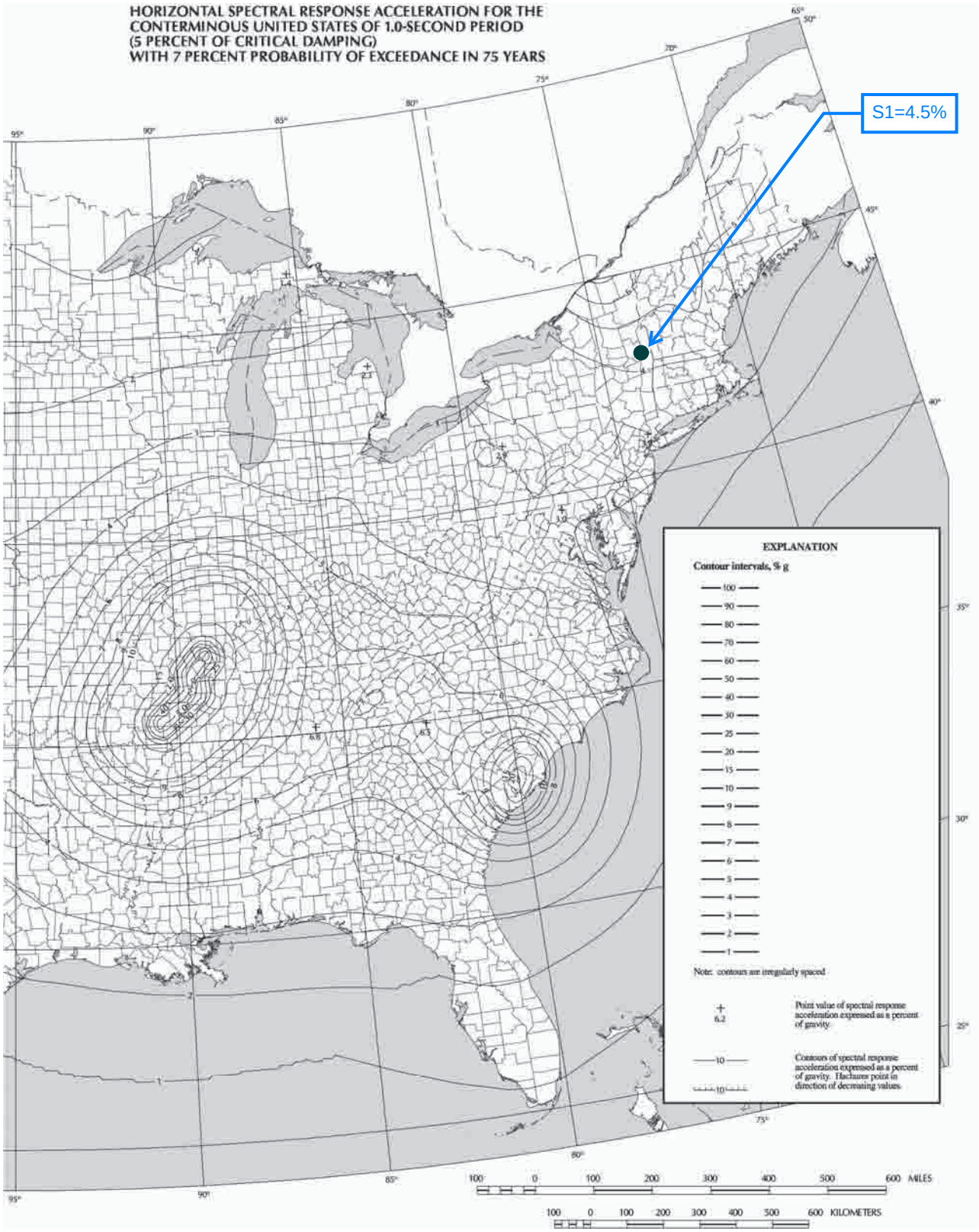

Figure 3.4.1-4b—Horizontal Response Spectral Acceleration Coefficient for the Conterminous United States at Period of 1.0-sec (S_1) with Seven Percent Probability of Exceedance in 75 yr (Approx. 1000-yr Return Period) and Five Percent Critical Damping

© 2011 by the American Association of State Highway and Transportation Officials.
All rights reserved. Duplication is a violation of applicable law.

APPENDIX D – FOUNDATION DESIGN

Abutments

Center Pier

Pile Shoe Cut Sheet

APPENDIX D.1 – ABUTMENTS

TABLE OF CONTENTS

FOUNDATION DESIGN METHODOLOGY....61
FOUNDATION LOADS....70
SOIL PROFILE AND PROPERTIES....78
ANALYSES SUMMARY....89
PILE MODELING IN GROUP AND LPILE....91

BEGIN ABUTMENT

GEOTECHNICAL DESIGN....101
ANALYSIS GRAPHS....104
PILE STRUCTURAL DESIGN....109
FIRST SEGMENT (FIRST ANALYSIS)....110
FIRST SEGMENT (SECOND ANALYSIS)....119
SECOND SEGMENT (SECOND ANALYSIS)....125
LOWER ZONE....136
DUCTILITY....141
EARTH PRESSURE LOAD....143
FIRST ANALYSIS (GROUP PROGRAM) INPUT....146
FIRST ANALYSIS (GROUP PROGRAM) OUTPUT....155
SECOND ANALYSIS (LPILE) INPUT & OUTPUT....165

END ABUTMENT

GEOTECHNICAL DESIGN....185
ANALYSIS GRAPHS....188
PILE STRUCTURAL DESIGN....193
FIRST SEGMENT (FIRST ANALYSIS)....194
FIRST SEGMENT (SECOND ANALYSIS)....203
SECOND SEGMENT (SECOND ANALYSIS)....209
LOWER ZONE....220

DUCTILITY 225
EARTH PRESSURE LOAD 227
FIRST ANALYSIS (GROUP PROGRAM) INPUT 230
FIRST ANALYSIS (GROUP PROGRAM) OUTPUT 240
SECOND ANALYSIS (LPILE) INPUT & OUTPUT 250

FOUNDATION DESIGN METHODOLOGY

Foundation Design Methodology

Begin and End Integral Abutments

Prepared by: HE
Reviewed by: KR

NYSDOT follows an inelastic design approach for integral abutment piles that allows the formation of a plastic hinge at the top of the pile and redistribution of the forces within the pile.

From NYSDOT GDM Section 11.9.2.7.11

"For integral abutments, a combined axial and lateral loading analysis must be performed on the piles including the thermal bridge movements. For the pile capacity due to combined loading, see NYSDOT LRFD Bridge Design Specifications Article 6 Steel Structures. NYSDOT GEB uses the P-Y method in evaluating the combined axial and lateral loadings due to thermal bridge movements. For purposes of this analysis, one half of the thermal contraction and expansion movements are assumed to occur at each abutment, assuming similar sized abutment stems. For short spans, generally less than 100 feet, this analysis typically results in elastic pile behavior, and therefore, most H-piles, CIP piles, or micropiles are feasible.

For longer spans, the combined loading analysis may result in a plastic hinge forming just below the stem. Initially, the pile connections are modeled as fixed. If the analysis shows plastic yielding occurring, an elastic restraint equal to the plastic pile moment is added in the above mentioned analysis to refine the moments within the pile. In these cases the piles must be evaluated for ductility."

This inelastic design approach for integral abutment piles is presented in greater detail in the Vermont Agency of Transportation (VTrans) guidelines for Integral abutment, which is followed closely in the foundation design and analysis of this bridge. This approach is also in agreement with AASHTO LRFD Bridge Design Specification, Section 4.4.

Two different analyses were performed for the foundation design and are summarized below:

First Analysis (in GROUP Program)

a. Pile to Pile cap connection was modeled as fixed.
b. Vertical load, temperature displacement, and girder rotation due to live load and superimposed dead load were applied to the pile cap to obtain the pile axial load and strong axis moment in pile.

The bending moment along the pile strong axis from GROUP analysis exceeded the plastic moment capacity of pile. Since the piles are compact, this resulted in plastic hinge formation just below the pile cap and redistribution of the forces. The hinge moment capacity is equal to plastic moment capacity of the pile. Therefore, after the formation of the plastic hinge, the maximum moment applied to the top of the pile is equal to its plastic moment capacity.

Second Analysis (in LPILE Program)

a. Due to the formation of the plastic hinge at the pile head, Pile to Pile cap connection was modeled as pinned with a moment equal to the plastic moment capacity of the pile applied at the top.
b. Temperature displacement was applied at the pile head.
c. Pile axial load demand obtained from the first analysis was used for the design.

For the design purpose, the total pile length was divided into two zones: Upper zone and Lower zone. The upper zone is from pile top to the point of second zero moment. The Lower zone is from point of second zero moment to pile tip and sees negligible bending moment. The upper zone was checked for the combined effect of axial force and bending moment while lower zone was only checked for axial force effects. The upper zone was further divided into two segments: Top segment and 2nd segment. The top segment is from pile top to point of first zero moment. The 2nd segment is between points of zero moment.

The pile forces and unbraced lengths were determined from the first analysis for both top and 2nd segment. For the top segment, plastic moment capacity was calculated based on the interaction equation from AASHTO Section 6.9.2.2 and was compared against the bending moment obtained from the analysis. Since the bending moment at the pile head exceeded the plastic moment capacity, a plastic hinge was assigned at the top with moment capacity equal to pile's plastic moment capacity. For the second segment, the design was checked to ensure that the combined axial and bending criteria based on interaction equation from AASHTO Section 6.9.2.2 was met. Failure to meet this requirement would result in a second hinge forming within the second segment and instability of the pile.

Next, the revised unbraced lengths for both segments and maximum bending moment in the second segment were obtained from the second analysis (with pinned pile head). Axial pile capacities were calculated for the top segment and 2nd segment using the revised unbraced length. For the top segment, this axial capacity was used to compare against the axial pile load demand. For the second segment, the design was checked to ensure that the interaction equation from AASHTO Section 6.9.2.2 was satisfied to prevent formation of a second hinge within the pile.

The lower zone was checked for the axial force effects with unbraced length equal to zero.

Lastly, the design was checked to ensure the ductility of the pile by using the guidance provided by NYSDOT GDM Section 11.9.2.7.11.

Refer to the attached reference pages from Vermont Agency of Transportation, Integral Abutment Foundation Design Guidelines for detailed analysis and design methods.

Figures from Vermont Agency of Transportation, Integral Abutment Design Guidelines:

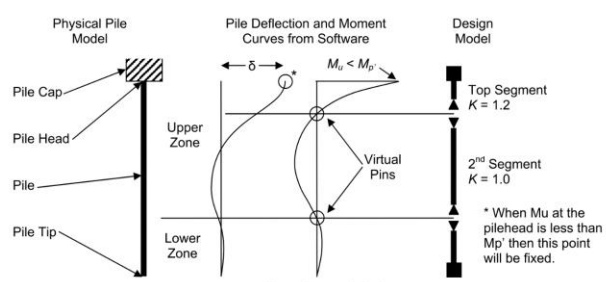

Figure 4.5.2-1 Pile Design Model when $M_u<M_p'$.

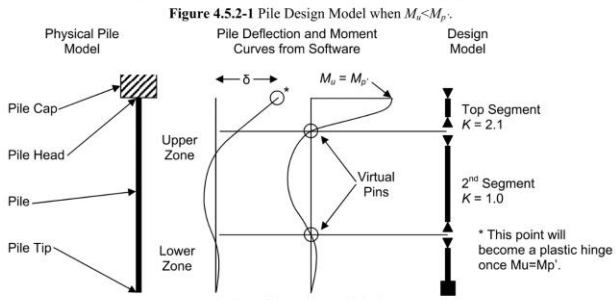

Figure 4.5.2-2 Pile Design Model when $M_u=M_p'$.

Pages from Vermont Agency of Transportation, Integral Abutment Design Guidelines

SECTION 4 STRUCTURAL ANALYSIS AND EVALUATION

4.1 GENERAL INFORMATION

The following is intended to provide the designer guidance in performing an integral abutment design. The reader is directed to the list of references at the end of the guideline for more detailed information regarding integral abutment design. In Appendix B of the guideline, a complete design example of the *Simplified Design Method* is provided for reference. Other references are available through members of the VTrans Integral Abutment Committee.

4.2 STRUCTURAL DESIGN CRITERIA

In addition to the requirements of Section 2.2.1 the following criteria shall be followed for the *Simplified Design Method*:

- The pile unbraced length shall be limited to 22 ft (*6.7 m*) or less.
- The non-composite dead load rotation at the end of girders shall be limited to 0.02 radians or less. (see section 6.2)

4.3 DESIGN METHODOLOGY

In accordance with NYSDOT Bridge Manual Section 11.2.1. Usage Requirements, negative moments are not calculated

4.3.1 Simplified Design Method

The *Simplified Design Method* is provided to ease the design process of integral abutment bridges. To date, most integral abutment bridges built by the State of Vermont have complied with the *Simplified Design* criteria (see sections 2.2.1 and 4.2). The criteria have been developed from proven experience. From this experience, some general assumptions have been made such as:

- all loads are applied on a simply supported structure for superstructure load effects;
- all loads are applied on a frame for calculating the negative bridge end moments;
- skews 20° or less have no effect on the behavior of the structure;
- steel H-Piles will be made of 50 ksi (*345 MPa*) steel; and
- small dead and live load rotations have minimal effects on the structure.

A vital assumption in the *Simplified Design Method* is the plastic moment of the pile section is effected by the applied axial load. As the axial load on the pile increases, the moment ($M_{p'}$) which causes a plastic hinge will decrease. Once the plastic hinge is formed, the pile head could be considered a pin with a constant moment applied. (See Section 4.5.2.) All axial forces will transfer through the plastic hinge as determined by the interaction equation in LRFD Section 6.9.2.2 using $M_{p'}$ as a limiting condition for the applied moment.

Several details have been provided in the guideline that will aid in developing a set of plans for an integral abutment structure. For example, bearing schemes for prestressed concrete and steel structures are provided. These are proven details and may be used on integral abutment designs meeting the *Simplified Design Method*.

Bridges designed by this process may be slightly more conservative than from a more detailed design process. Structures that do not meet the criteria for the *Simplified Design Method* shall be designed with greater detail. The extent of the detailed design depends on how much of the criteria are met. If the bridge does not meet one criterion then the detailed design will only be related to that criterion. All other assumptions presented in this guide may be used without alteration.

Dead load and live load rotations are included in the design of the pile

© 2009 by the Structures Section, Program Development Division
Vermont Agency of Transportation

Pages from Vermont Agency of Transportation, Integral Abutment Design Guidelines

MET K=2.1	Table 4.5.1.5-5 (*cont.*) Primary Bending in Strong Axis													
	Unbraced Length (*m*)													
Pile[12]	0.6	1.2	1.8	2.4	3.0	3.6	4.2	4.8	5.4	6.0	6.6	7.2	7.8	8.4
360x174	**7618**	**7504**	**7318**	**7065**	**6752**	**6388**	**5984**	**5549**	**5094**	**4630**	**4165**	**3710**	**3272**	**2839**
360x152	**6643**	**6543**	**6378**	**6154**	**5878**	**5558**	**5201**	**4818**	**4418**	**4010**	**3603**	**3204**	**2821**	**2443**
360x132	5779	5690	5545	5348	5105	4823	4510	4173	3822	3465	3108	2760	2425	2097
310x125	**5439**	**5329**	**5152**	**4914**	**4624**	**4292**	**3931**	**3551**	**3166**	**2784**	**2415**	**2055**	**1751**	**1510**
310x110	**4819**	**4721**	**4562**	**4349**	**4089**	**3793**	**3470**	**3131**	**2787**	**2447**	**2120**	**1800**	**1534**	**1323**
310x 93	4067	3983	3846	3663	3440	3185	2909	2620	2327	2038	1760	1490	1270	1095
250x 85	**3701**	**3589**	**3410**	**3175**	**2896**	**2588**	**2265**	**1943**	**1633**	**1337**	**1105**	**928**	**791**	**682**
250x 62	2731	2647	2512	2334	2124	1893	1652	1412	1181	963	796	669	570	491
200x 53	2322	2215	2046	1831	1588	1334	1086	852	673	545	450	378	322	278

4.5.1.6 Pile Orientation

For bridges that meet the criteria in Section 2.2, piles should be oriented for weak axis bending with the webs of the piles detailed parallel to the centerline of bearing as shown in Figure 4.5.1.6-1. Bridges with a skew exceeding the limits in Section 2.2 may require the webs of the piles oriented perpendicular to the centerline of the bridge.

In accordance with NYSDOT Bridge Manual Section 11.2.1. Pile Requirements, all piles are placed with web parallel to direction of movement.

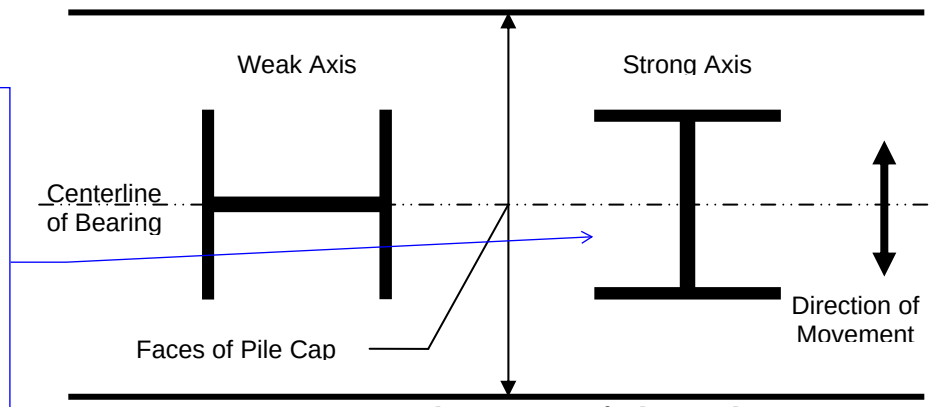

Figure 4.5.1.6-1 Typical orientation of piles in pile cap.

4.5.2 Pile Design

Referring to LRFD Section 6.15.2 commentary, the pile can be divided into two primary zones. The upper zone is subjected to flexure and axial loads. The lower zone is only subjected to axial loads as the flexural loads have been fully resisted in the upper zone. The pile is fully braced by the surrounding soil. Where the upper zone experiences very little damage due to driving, the lower zone may become damaged to some extent, especially if driven to bedrock.

In the upper zone, a plastic hinge may form at the point the pile enters the pile cap. This is a result of the pile cap displacing horizontally or rotation due to thermal, dead or live loads or various combinations of the three. A plastic hinge is an acceptable boundary condition for column design. To design a pile with a plastic hinge, assume the pile is pinned with a constant moment at the pile cap and pinned at the point of the first zero (0) moment. This is the first pile segment to analyze. The second segment will be between the top two zero (0) moments. The segment with the controlling axial strength will be used in determining the pile size to use in the design. Refer to the AISI, Highway Structures Design Handbook, Integral Abutments for Steel Bridges for more information. Refer to **Figure 4.5.2-1** .

The pile's axial capacity is determined by the controlling condition of the following (assuming uniaxial bending):

With L-Pile, apply the lateral deflection (δ), determined by the thermal displacement, shrinkage and creep; the axial load (P_u) applied to the pile and a fixed zero rotation of the pile cap.

The preferred ratio of the applied axial load (P_u) to the calculated compressive structural pile resistance (SPR)

© 2009 by the Structures Section, Program Development Division
Vermont Agency of Transportation

Pages from Vermont Agency of Transportation, Integral Abutment Design Guidelines

(P_r) shall be greater then 0.2; otherwise the pile will be unnecessarily large.

$$P_u < P_r = \phi_c P_n \tag{4.5.2-1}$$

$$\frac{P_u}{P_r} \geq 0.2 \tag{4.5.2-2}$$

1. **Top Segment:** Enter the interaction equation in LRFD Section 6.9.2.2 (equation 1 below) with the applied axial load (P_u), the calculated SPR (P_r) and flexural (M_r) strengths based on the unbraced length of the top segment of the pile and equate to one. Solve for the applied moment. An axial load on a column will reduce the magnitude of the plastic moment (M_p). This resulting moment ($M_{p'}$) will be what creates a plastic hinge at the pile head. The applied moment will not be able to exceed this limit. For this portion of the pile, the axial resistance will be reduced by ϕ_c = 0.70 and the flexure resistance will be factored with ϕ_f = 1.00.

$$\frac{P_u}{P_r} + \frac{8}{9}\left(\frac{M_u}{M_r}\right) = 1.0 \tag{4.5.2-3}$$

Solve for M_u and equate to $M_{p'}$

$$M_u = M_{p'} = \frac{9.0}{8.0}\left(1.0 - \frac{P_u}{P_r}\right)M_r \tag{4.5.2-4}$$

2. If the applied moment (M_u) is greater then $M_{p'}$ a plastic hinge will form. A new analysis will need to be done using the lateral deflection and the axial load from step 1 and $M_{p'}$ calculated in step 2. This analysis will be used to revise the unbraced lengths of the pile. Recalculate the pile axial capacity in both the top segment and the second segment using the revised unbraced lengths. If M_u remains below $M_{p'}$ then the pile is still in the elastic range – no additional analysis is required.

3. **Second Segment:** From either the initial analysis or revised analysis obtain the maximum moment in the second segment. With this moment, the unbraced length of the second segment and the same axial load applied in step 1, ensure that LRFD Section 6.9.2.2 is satisfied for this segment. Use the same resistance factors as in step 1.

Lower Zone: For the lower zone of the pile, only calculate the axial capacity. The axial resistance is based on an unbraced length of zero and will be reduced by ϕ_c = 0.50 if the use of a pile tip is required (i.e. driving to bedrock) or ϕ_c = 0.60 if a pile tip is not required.

The controlling SPR will be the lowest axial capacity (P_r) of the top segment or the second segment of the upper zone or the lower zone of the pile. The SPR will be compared with the applied axial load.

The controlling Nominal Structural Pile Resistance (NSPR), will be the lowest nominal axial capacity (P_n) of the top segment or the second segment of the upper zone or the lower zone of the pile. The NSPR will be required for the drivability check (See Section 10.4.1).

Check the pile for flange and web buckling.

When M_u exceeds $M_{p'}$ at the pile head, the pile will develop a plastic hinge. The hinge allows the pile head to rotate with a constant moment ($M_{p'}$). The pile head transforms from a fixed connection to a pinned connection, thereby changing the effective length of the top segment for stability checks. The capacity of the top segment of the pile is enhanced if the plastic moment forms as described.

© 2009 by the Structures Section, Program Development Division
Vermont Agency of Transportation

Pages from Vermont Agency of Transportation, Integral Abutment Design Guidelines

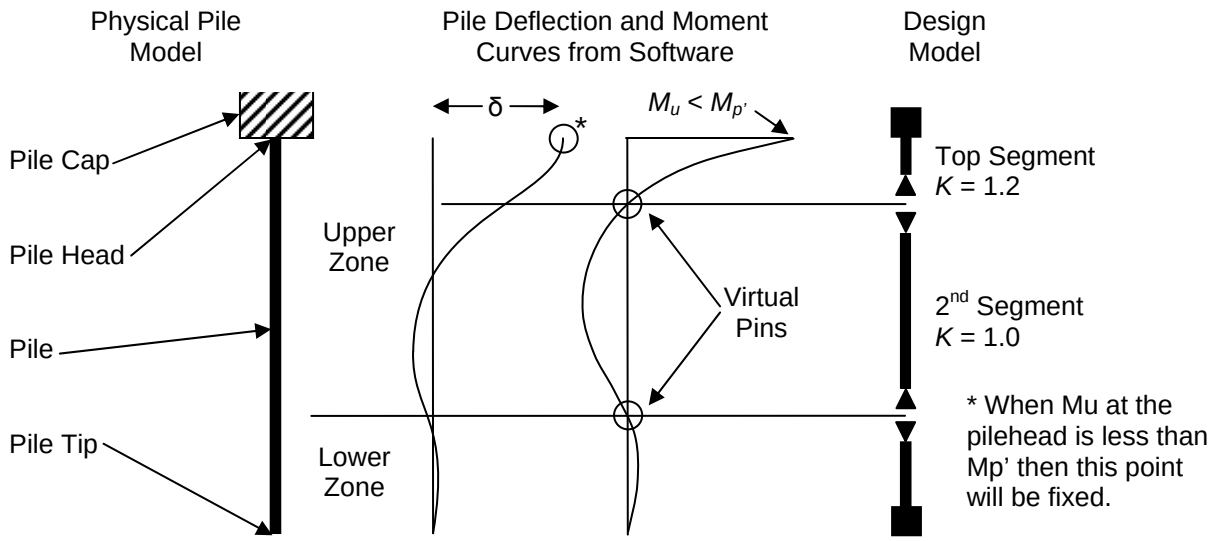

Figure 4.5.2-1 Pile Design Model when $M_u<M_{p'}$.

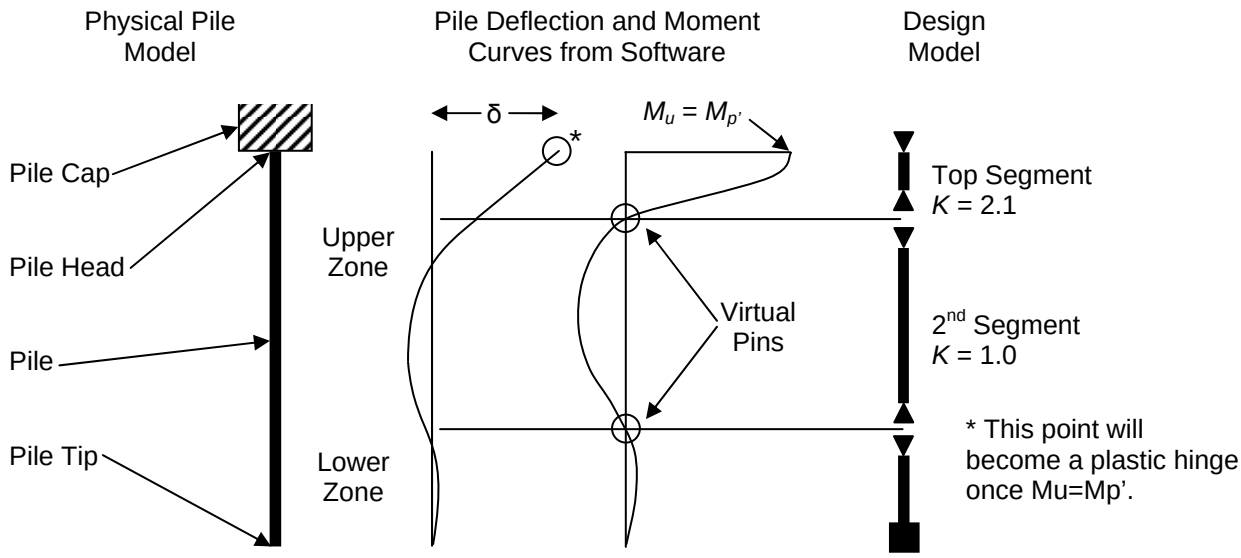

Figure 4.5.2-2 Pile Design Model when $M_u=M_{p'}$.

4.5.2.1 L-Pile® Software Analysis

The L-Pile® design software is available to the designer. This software is used to analyze pile-soil interaction in determining the moment developed throughout the pile due to the thermal movement demand of the structure. L-Pile® allows loads and deflections (lateral and rotational) to be included in a single load case for analysis. Typically, the Geotechnical Engineer will have developed an L-Pile® input file as part of the foundation analysis. Once the file is set up, the designer can use the file to make minor modifications, as necessary, to the pile geometry, orientation and soil profile to analyze the scour condition. The important elements of the design that are drawn from this output are the following:

4.5.2.1.1 Lateral Load at Pile Head

This is the lateral load required to generate the design thermal movement demand, or deflection, due to temperature loading.

4.5.2.1.2 Pile Deflection and Moment

The deflection and moment throughout the pile due to temperature loading can be output both in graphical (**Figure 4.5.2.1-1** and Figure 4.5.2.1-2) and tabular (Figure 4.5.2.1-3) formats. Included in the tabular output are the maximum negative moment at the pile head (X = 0 in.) and the maximum positive moment within the pile unbraced length. The location of the maximum positive moment is dependent upon the soil conditions and will vary from

© 2009 by the Structures Section, Program Development Division
Vermont Agency of Transportation

Pages from Vermont Agency of Transportation, Integral Abutment Design Guidelines

project to project.

4.5.2.1.3 *Unbraced Lengths*

The lengths along the pile:

- between the top of the pile (plastic hinge) and the first point of zero moment, or
- between the first and second points of zero moments (see **Figure 4.5.2.1-2** and **Figure 4.5.2.1-3**). This is the length used to calculate buckling stresses in the pile.

4.5.2.1.4 *Depth to Fixity*

Depth to fixity is the effective pile length or the depth to zero deflection in the pile. (See **Figure 4.5.2.1-1**). The effective pile length should be between the bottom of the pile cap to the depth of fixity.

© 2009 by the Structures Section, Program Development Division
Vermont Agency of Transportation

Pages from Vermont Agency of Transportation, Integral Abutment Design Guidelines

per abutment or 5 piles per abutment and a pier – ϕ_{dyn} = 0.65.

- NAPR is being verified by static analysis with bearing on bedrock – ϕ_{stat} = 0.45

10.6 DESIGN STEPS FOR PILES

The following steps shall be followed for the design and verification of the pile design for integral abutment bridges. Refer to Appendix B for a design example that follows this outline:

- Determine foundation displacements (δ) and load effects (P_u and M_u) from the superstructure and substructure designs (LRFD Section 10.7.1.6).
- If applicable, determine the magnitude of scour and liquefaction susceptibility (Refer to the Hydraulics and Geotechnical Reports).
- Determine if downdrag loadings (*DD*) should be considered. (Refer to the Geotechnical Report).
- Select preliminary pile size and pile layout (LRFD Section 10.7.1.2).
- Estimate Pile Length (typically to bedrock).
- Determine the Nominal Structural Pile Resistance (NSPR) (P_n) (LRFD Section 6.9.4.1).
- Determine Structural Flexural Resistance (H-Pile Weak Axis – LRFD Section 6.12.2.2).
- Run L-Pile to determine pile design unbraced lengths (l_b) and internal moments.
- Determine resistance factors (ϕ_c and ϕ_f) for the structural strength for the upper and lower zone of the pile (LRFD Sections 6.15.2 and 6.5.4.2).
- Determine the Nominal Axial Pile Resistance (NAPR) (R_n) (Applied loads, P_u, divided by ϕ_c).
- Determine if the applied moment on the pile will cause the pile head to enter plastic deformation by using the interaction of the combined axial & flexural load effects of a single pile (LRFD Section 6.9.2.2).
- Maximum shear load effect for a single pile (Refer L-Pile® Results).
- Determine Structural Shear Resistance (H-Pile Weak Axis – AISC G7).
- Determine method for pile driving acceptance criteria (LRFD Section 10.5.5).
- Determine Resistance Factor for Geotechnical Strength (ϕ_{mon}) (LRFD Section 10.5.5.2.3).
- Determine Nominal Pile Driving Resistance (NPDR) or also called the Geotechnical Resistance for a single pile (LRFD Section 10.7.3.13).
- Review the final design with L-Pile®.
- Show proper Pile Data on Plan Sheets.

© 2009 by the Structures Section, Program Development Division
Vermont Agency of Transportation

FOUNDATION LOADS

PROJECT:	Assignment No. 2 - Bridge Replacement	**JMT ID:**	21-03935-002	
LOC.:	Malden Turnpike over MP 103.16 I-87	Done By:	RDH	8/18/2025
CLIENT:	NYS Thruway Authority	Check By:	NJT	8/18/2025
CLIENT ID:	A72190	Correct By:	RDH	8/18/2025
SUBJECT:	Max. Thermal Movement at Abutment for Integral Pile Eccentricity	Verify By:	NJT	8/19/2025

PURPOSE: Determine the maximum thermal movement for eccentricty in piles at strength & service.

REFERENCE: AASHTO LRFD Bridge Design Manual 9th Edition
NYSDOT Blue Pages

ASSUMPTIONS: Use the worst case movement based on 70° set of girders.

Inputs

Minimum Temperature	-20	degrees F, AASHTO Fig. 3.12.2.2-2 & NYSBP
Maximum Temperature	70	assumed
αT	6.50E-06	in/in/degF, thermal coefficient of expansion, AASHTO 6.4.1
TU	1.2	load factor, Table 3.4.1-1

Determine Total Expansion at SB Structure, South Fascia

$$\Delta_T = \alpha\ L\ (T_{MaxDesign} - T_{MinDesign}) \qquad (3.12.2.3\text{-}1)$$

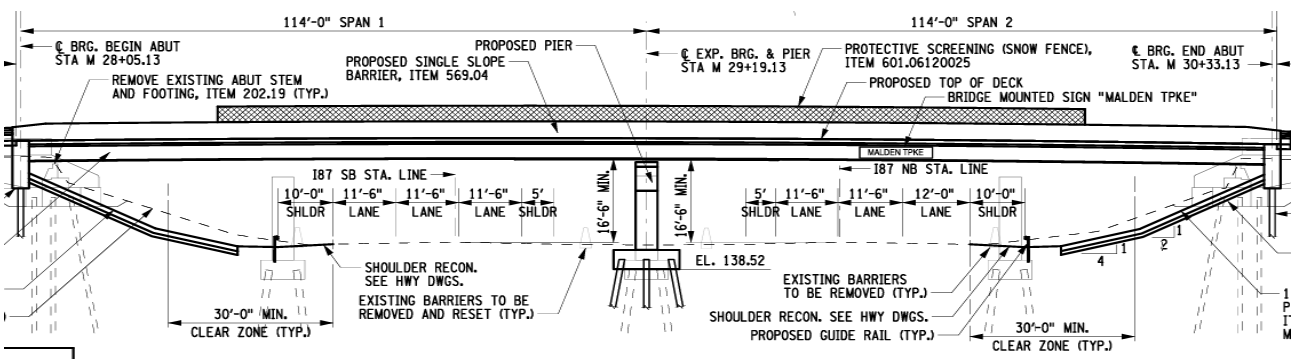

$T_{MaxDesign} - T_{MinDesign}$	90	degrees F
STA_{Beg}	28+05.13	begin abutment CL bearings
STA_{End}	30+33.13	end abutment CL bearing
STA_{Diff}	228.00	difference

Pier will have an expansion bearing, designed in accordance with NYSDOT BM 12.2.6, fixity between the abutments will be assumed to be the 1/3 to 2/3 length of the bridge.

L_{max}	152	ft, value is 2/3 of the diff. Rounded up to account for the dist. btwn CL Bearings
$\Delta_{service}$	1.07	in, total deflection unfactored for service case
Δ_{str}	1.28	in, factored deflection for strength case

PROJECT:	Assignment No. 2 - Bridge Replacement	**JMT ID:**	21-03935-002	
LOC.:	Malden Turnpike over MP 103.16 I-87	Done By:	TRB	8/18/2025
CLIENT:	NYS Thruway Authority	Check By:	RDH	8/19/2025
CLIENT ID:	A72190	Correct By:	TRB	8/19/2025
SUBJECT:	Abutment Piles Load Summary	Verify By:	RDH	8/19/2025

PURPOSE: Summary of Dead and Live Loads on Abutment Piles

REFERENCE: AAHSTO LRFD Bridge Design and NYSDOT Bridge Manual

ASSUMPTIONS:

Load Factors

D_C	1.25	Component and Attachments
D_W	1.5	Future Wearing Surface
L_L	1.75	Live Load
I	33%	%, Impact Percentage

Begin Abutment Loading

	Unfactored	Factored
D_C	571.17	713.97
D_W	41.80	62.70
L_L	243.24	425.66
Total	856.21	1202.33

End Abutment Loading

	Unfactored	Factored
D_C	548.80	686.00
D_W	41.80	62.70
L_L	243.24	425.66
Total	833.83	1174.36

	PROJECT:	Assignment No. 2 - Bridge Replacement	**JMT ID:**	21-03935-002	
	LOC.:	Malden Turnpike over MP 103.16 I-87	Done By:	TRB	8/18/2025
	CLIENT:	NYS Thruway Authority	Check By:	RDH	8/19/2025
	CLIENT ID:	A72190	Correct By:	TRB	8/19/2025
SUBJECT:	Abutment Piles Dead Loads		Verify By:	RDH	8/19/2025

PURPOSE: Determine the dead load applied to the abutment piles

REFERENCE: AAHSTO LRFD Bridge Design and NYSDOT Bridge Manual

ASSUMPTIONS:

Dead Loads

γ_c	150	pcf, Unit Weight of Concrete
γ_s	140	pcf, Unit Weight of Soil

Reactions from Merlin Table 1.2.7.2

R_E	67.35	kips, Exterior Girder Reactions (Unfactored)
R_I	70.83	kips, Interior Girder Reactions (Unfactored)
N_E	2	Number Exterior Girders
N_I	3	Number Interior Girders
R_{ET}	134.7	kips, total applied reactions per abutment
R_{IT}	212.49	kips, total applied reactions per abutment

Approach Slab

W	31.667	ft, Width of Approach Slab
L	9	ft, Length of Approach Slab (rounded up greater than half)
T	1	ft,Thickness of Approach Slab
Weight	42.75	kips, Weight of Approach Slab

Begin Abutment - Lower Portion

W	3	ft, Width of Abutment
L	56.5	ft, Length of Abutment
T	4.67	ft,Thickness of Abutment
Weight	118.73	kips, Weight of Abutment Lower Portion

Begin Abutment - Upper Portion Middle

W	3	ft, Width of Abutment
L	35	ft, Length of Abutment
T	4.21	ft,Thickness of Abutment
Weight	66.31	kips, Weight of Abutment Upper Portion Middle

PROJECT:	Assignment No. 2 - Bridge Replacement	**JMT ID:**	21-03935-002	
LOC.:	Malden Turnpike over MP 103.16 I-87	Done By:	TRB	8/18/2025
CLIENT:	NYS Thruway Authority	Check By:	RDH	8/19/2025
CLIENT ID:	A72190	Correct By:	TRB	8/19/2025
SUBJECT: Abutment Piles Dead Loads		Verify By:	RDH	8/19/2025

Begin Abutment - Upper Portion Wingwalls

W_1	3	ft, Width of Wingwall Vertical Straight Portion
L_1	0.75	ft, Length of Wingwall Vertical Straight Portion
T_1	5.44	ft,Thickness of Wingwall Vertical Straight Portion
Weight	1.836	kips, Weight of Abutment Upper Portion Wingwall VS Portion

W_2	3	ft, Width of Wingwall Horizontal Straight Portion
L_2	10	ft, Length of Wingwall Horizontal Straight Portion
T_2	0.92	ft,Thickness of Wingwall Horizontal Straight Portion
Weight	4.14	kips, Weight of Abutment Upper Portion Wingwall HS Portion

W_3	3	ft, Width of Wingwall Triangular Portion
L_3	10	ft, Length of Wingwall Triangular Portion
T_3	4.52	ft,Thickness of Wingwall Triangular Portion
Weight	10.17	kips, Weight of Abutment Upper Portion Wingwall Triangular Portion

Weight Total	32.29	kips, Weight of Abutment Upper Portion Wingwalls (times two)

End Abutment - Lower Portion

W	3	ft, Width of Abutment
L	54.5	ft, Length of Abutment
T	3.92	ft,Thickness of Abutment

Weight	96.14	kips, Weight of Abutment Lower Portion

End Abutment - Upper Portion Middle

W	3	ft, Width of Abutment
L	35	ft, Length of Abutment
T	4.23	ft,Thickness of Abutment

Weight	66.62	kips, Weight of Abutment Upper Portion Middle

End Abutment - Upper Portion Wingwalls

W_1	3	ft, Width of Wingwall Vertical Straight Portion
L_1	0.75	ft, Length of Wingwall Vertical Straight Portion
T_1	5.46	ft,Thickness of Wingwall Vertical Straight Portion
Weight	1.84	kips, Weight of Abutment Upper Portion Wingwall VS Portion

W_2	3	ft, Width of Wingwall Horizontal Straight Portion
L_2	9	ft, Length of Wingwall Horizontal Straight Portion
T_2	1.58	ft,Thickness of Wingwall Horizontal Straight Portion
Weight	6.40	kips, Weight of Abutment Upper Portion Wingwall HS Portion

W_3	3	ft, Width of Wingwall Triangular Portion
L_3	9	ft, Length of Wingwall Triangular Portion
T_3	3.88	ft,Thickness of Wingwall Triangular Portion
Weight	7.86	kips, Weight of Abutment Upper Portion Wingwall Triangular Portion

Weight Total	32.20	kips, Weight of Abutment Upper Portion Wingwalls (times two)

Approach Slab - Future Wearing Surface

L	9	ft, Length of Approach Slab
W	31.667	ft, Width of Approach Slab
δ_{ws}	20	psf, Weight of Future Wearing Surface (NYSDOT BM Section 5.1.1)
Weight	5.70	kips, Weight of Approach FWS

Deck - Future Wearing Surface

L	57	ft, Length of Approach Slab
W	31.667	ft, Width of Approach Slab
δ_{ws}	20	psf, Weight of Future Wearing Surface (NYSDOT BM Section 5.1.1)
Weight	36.10	kips, Weight of Deck FWS

	PROJECT:	Assignment No. 2 - Bridge Replacement	**JMT ID:**	21-03935-002	
	LOC.:	Malden Turnpike over MP 103.16 I-87	Done By:	TRB	8/18/2025
	CLIENT:	NYS Thruway Authority	Check By:	RDH	8/19/2025
	CLIENT ID:	A72190	Correct By:	TRB	8/19/2025
SUBJECT:	Abutment Piles Live Loads		Verify By:	RDH	8/19/2025

PURPOSE: Determine the live load applied to the abutment piles

REFERENCE: AAHSTO LRFD Bridge Design and NYSDOT Bridge Manual

ASSUMPTIONS:

Live Loads

I	33%	%, Impact Percentage

Approach Slab

N_L	2	Number of Lanes
L	9	ft, Length of Approach Slab (rounded up greater than half)
L_L	0.64	Lane Load
Total	11.52	kips, Lane Load on Approach Slab

Abutments

L_L	31.31	kips, Lane Load at abutment
T_L	63.57	kips, Truck Load at abutment
N_L	2	Number of Lanes
Total	231.72	kips, Live Load on Abutment

	PROJECT:	Assignment No. 2 - Bridge Replacement	**JMT ID:**	21-03935-002	
	LOC.:	Malden Turnpike over MP 103.16 I-87	Done By:	RDH	8/19/2025
	CLIENT:	NYS Thruway Authority	Check By:		
	CLIENT ID:	A72190	Correct By:		
SUBJECT:	Max. Rotation at the Integral Abutments for Pile Analysis		Verify By:		

PURPOSE: Determine rotations at the abutment due to all loading after connection with superstructure

REFERENCE: NYSDOT Bridge Manual, 2021
AASHTO LRFD Bridge Design Specification, 9th Ed.
Merling Dash outputs for design including FWS

ASSUMPTIONS: Assume that the temporary steel girder support does not provide a fixed connection to abutment
The deflection at the first tenth point will be used to determine the dead load rotations at abutment
As requested by geotechnical engineers, rotations will be provide factored and unfactored

DETERMINE MAX. ROTATIONS AT INTEGRAL ABUTMENTS

Composite Deflections and Rotation (Merlin Table 1.2.8.1)

$d_{0.05L}$	5.70	ft, distance to first twenthy point along the girder
$d_{0.05L}$	68.40	in, distance to first twenthy point along the girder

	Exterior	Interior	
δ_{CompDL}	0.1000	0.0942	in, deflection at first 20th point
θ_{CompDL}	0.00146	0.00138	radians, unfactored rotation at abutment

Live Load Rotation (Unfactored) at Abutment (Merlin Table 1.2.8.2)

IM	1.33	impact factor, AASHTO Table 3.6.2.1-1

	Exterior	Interior	
θ_{LL}	0.00461	0.00434	radians, unfactored rotation at abutment
θ_{LL+I}	0.00613	0.00577	radians, unfactored rotation at abutment with impact

Combined Rotation at Abutments for Service & Limit States

γ_{DW}	1.50	load factor for future wearing surface, conservative
γ_{LL}	1.75	live load factor

	Exterior	Interior	
$\theta_{Service}$	**0.00759**	**0.00715**	radians, unfactored rotation for service
$\theta_{Strength}$	**0.01292**	**0.01217**	radians, factored rotation for strength

SOIL PROFILE AND PROPERTIES
BEGIN ABUTMENT

SM 282 E 12/02

NEW YORK STATE THRUWAY AUTHORITY
NEW YORK STATE CANAL CORPORATION

SUBSURFACE EXPLORATION LOG

PSN		BORNUM B-1	
DIVISION	Albany	**HOLE**	DN-B
COUNTY	Ulster	**LINE**	SB West Shoulder
PIN		**STA**	
ROUTE	Thruway Mainline	**OFFSET**	ft
MILEPOST	103.16	**SURF. ELEV.**	143.4595, NAD 88
PROJECT	Assignment 2 - NY[redacted]	**DEPTH TO WATER**	

COORDINATES (L[redacted]

3/28/2024

AUGER 155.33' [redacted] lb **HAMMER FALL-CASING** in

CASING O. [redacted] I. D. 4 in W[redacted] **HAMMER-SAMPLER** 140 lb **HAMMER FALL-SAMPLER** 30 in

SAMPLER O. D. 2 in I. D. 1-3/8 in HA[redacted]R TYPE Automatic

CASING BLOWS/ft	DEPTH (ft.) BELOW SURFACE	SAMPLE NO.	BLOWS ON SAMPLER (in.) 0/6	6/12	12/18	18/24	MOIST. CONT. (%)	Soil Recovery (in.)	DESCRIPTION OF SOIL AND ROCK	
	0.0	SS1	5	9	16	19		19	4" CRUSHED STONE FILL Brown Silty CLAY; some cf Gravel; little cmf Sand Navg = 25, γ' = 130pcf, φ = 0deg, c = 4000psf	M - PL
		SS2	50/3"				6.5%	3	Dark Brown cmf SAND; little cf Gravel; trace Silt; trace Organic Material (root hairs)	M - NPL
	5.0	SS3	3	2	3	5	29.0%	12	Brownish-Grey CLAY; trace mf Sand; trace Organic Material (root hairs) Navg = 6, γ' = 120pcf, φ = 0deg, c = 1000psf	M - PL
		SS4	10	[illegible]			34.2%	18	Brown CLAY; trace mf Sand; trace Silt	M - PL
			Approx water elev. = 136.8'							
	10.0	SS5	3	4	3	4	42.0%	16	Brown CLAY; trace cmf Sand; trace Silt	M - PL
		SS6	WH	1	1	1	47.3%	24	Grey CLAY; trace f Sand; trace Silt	W - PL
		SS7	WH	1	WH	1		24	Greyish-Brown CLAY; trace f Sand; trace Silt Navg = 0, γ' = 37.6pcf, φ = 0deg, c = 250psf	W - PL
	15.0	SS8	WH/24"				47.5%	24	Grey CLAY; trace Silt LL = 47, PL = 21, PI = 26	S - PL
	20.0	SS9	WH/24"				64.7%	24	Grey CLAY; trace Silt	S - PL
	25.0	SS10	WH/24"				67.4%	24	Grey CLAY; trace Silt	S - PL

The subsurface information shown here was obtained for design and estimate purposes. It is made available so that users may have access to the same information available to the State. It is presented in good faith. By the nature of the exploration process, the information represents only a small fraction of the total volume of the material at the site. Interpolation between data samples may not be indicative of the actual material encountered.

DRILL RIG OPERATOR Robert Drake; Michael Keleher
SOIL & ROCK DESCRIPTION Jesse O'Dell (ATL)
INSPECTOR Jesse O'Dell (ATL)
BIN
STRUCTURE NAME

CONTRACT D214866 **CONTRACTOR** ATL

SHEET 1 OF 3 HOLE DN-B

TWY-CAN SUBSURF EXPLORATION CD10733.JMT THRUWAY - SAUGERTIES.GPJ TWYSE1TMPL_V05.GDT 8/1/24

SM 282 E 12/02

NEW YORK STATE THRUWAY AUTHORITY
NEW YORK STATE CANAL CORPORATION

SUBSURFACE EXPLORATION LOG

PSN _____ BORNUM B-1
DIVISION Albany
COUNTY Ulster
PIN
ROUTE Thruway Mainline
MILEPOST 103.16
PROJECT Assignment 2 - NYSTA CR34 over Thruway Mainline Bridge Replacement

HOLE DN-B
LINE SB West Shoulder
STA
OFFSET ft
SURF. ELEV. 143.4595, NAD 88
DEPTH TO WATER

COORDINATES (Lat) 42.108306°N (Long) 73.958204°W
DATE START 3/27/2024 **DATE FINISH** 3/28/2024

AUGER
CASING O. D. 4-1/2 in I. D. 4 in
SAMPLER O. D. 2 in I. D. 1-3/8 in

WT OF HAMMER-CASING lb **HAMMER FALL-CASING** in
WT OF HAMMER-SAMPLER 140 lb **HAMMER FALL-SAMPLER** 30 in
HAMMER TYPE Automatic

CASING BLOWS/ft	DEPTH (ft.) BELOW SURFACE	SAMPLE NO.	BLOWS ON SAMPLER (in.) 0/6 6/12 12/18 18/24	MOIST. CONT. (%)	Soil Recovery (in.)	Rock Recovery (ft.)	DESCRIPTION OF SOIL AND ROCK	
	25.0							
		SS11	WH/24"	55.1%	24		Grey CLAY; trace Silt	S - PL
	30.0							
		SS12	WH/24"	39.4%	24		Grey CLAY; trace Silt LL = 43, PL = 19, PI = 24	S - PL
	35.0							
		SS13	WH/24"		24		Grey CLAY; trace Silt	S - PL
	40.0							
		SS14	WR/24"		24		Grey CLAY; trace Silt	W - PL
	45.0							
		SS15	WR/24"		24		Grey CLAY; trace Silt	W - PL
	50.0							

The subsurface information shown here was obtained for design and estimate purposes. It is made available so that users may have access to the same information available to the State. It is presented in good faith. By the nature of the exploration process, the information represents only a small fraction of the total volume of the material at the site. Interpolation between data samples may not be indicative of the actual material encountered.

DRILL RIG OPERATOR Robert Drake; Michael Keleher
SOIL & ROCK DESCRIPTION Jesse O'Dell (ATL)
INSPECTOR Jesse O'Dell (ATL)
BIN
STRUCTURE NAME

CONTRACT D214866 **CONTRACTOR** ATL

SHEET 2 OF 3 HOLE DN-B

TWY-CAN SUBSURF EXPLORATION CD10733.JMT THRUWAY - SAUGERTIES.GPJ TWYSE1TMPL_V05.GDT 8/1/24

SM 282 E 12/02

NEW YORK STATE THRUWAY AUTHORITY
NEW YORK STATE CANAL CORPORATION

SUBSURFACE EXPLORATION LOG

PSN		BORNUM B-1	
DIVISION	Albany	**HOLE**	DN-B
COUNTY	Ulster	**LINE**	SB West Shoulder
PIN		**STA**	
ROUTE	Thruway Mainline	**OFFSET**	ft
MILEPOST	103.16	**SURF. ELEV.**	143.4595, NAD 88
PROJECT	Assignment 2 - NYSTA CR34 over Thruway Mainline Bridge Replacement	**DEPTH TO WATER**	

COORDINATES (Lat) 42.108306°N (Long) 73.958204°W

DATE START 3/27/2024 **DATE FINISH** 3/28/2024

AUGER						**WT OF HAMMER-CASING**		lb	**HAMMER FALL-CASING**		in
CASING	**O. D.**	4-1/2	in	**I. D.**	4	in	**WT OF HAMMER-SAMPLER**	140	lb	**HAMMER FALL-SAMPLER**	30	in
SAMPLER	**O. D.**	2	in	**I. D.**	1-3/8	in	**HAMMER TYPE**	Automatic				

CASING BLOWS/ft	DEPTH (ft.) BELOW SURFACE	SAMPLE NO.	BLOWS ON SAMPLER (in.) 0/6	6/12	12/18	18/24	MOIST. CONT. (%)	Soil Recovery (in.)	Rock Recovery (ft.)	DESCRIPTION OF SOIL AND ROCK	
	50.0										
		SS16	7					13		Grey CLAY; and cf Gravel; little cmf Sand; trace Silt	W - PL
	55.0			50/5"						Possible WEATHERED BEDROCK	-
										Encountered possible WEATHERED ROCK at 54.5 feet. Advanced 3 7/8" tri-cone roller bit to 57.0 feet and began coring.	
										Assumed Top of Sound rock	
		RUN1								Black SHALE	-
										54" or 90% Recovery	
										8 Pieces (40") - 26% Chips and Fragments	
										4 Pieces longer than 4" (33") - RQD = 55%	
	60.0									SHALE, γ' = 87.6pcf, qu = 15000psi	

BOTTOM OF HOLE AT 62.00 ft

Notes:
1. Borehole backfilled with on-site soils.

DATE	TIME	DEPTH (ft.) HOLE	CASING	WATER	ARTESIAN HEAD HEIGHT ABOVE GROUND	FILLED WITH WATER AT END OF DAY
27-Mar-24	16:20	44.00	10.00	9.10		
28-Mar-24	07:30	44.00	10.00	4.40		

The subsurface information shown here was obtained for design and estimate purposes. It is made available so that users may have access to the same information available to the State. It is presented in good faith. By the nature of the exploration process, the information represents only a small fraction of the total volume of the material at the site. Interpolation between data samples may not be indicative of the actual material encountered.

DRILL RIG OPERATOR Robert Drake; Michael Keleher
SOIL & ROCK DESCRIPTION Jesse O'Dell (ATL)
INSPECTOR Jesse O'Dell (ATL)
BIN
STRUCTURE NAME

CONTRACT D214866 **CONTRACTOR** ATL

SHEET 3 OF 3 HOLE DN-B

TWY-CAN SUBSURF EXPLORATION CD10733 JMT THRUWAY - SAUGERTIES.GPJ TWYSE1TMPL_V05.GDT 8/1/24

SOIL PROFILE AND PROPERTIES
END ABUTMENT

SM 282 E 12/02

NEW YORK STATE THRUWAY AUTHORITY
NEW YORK STATE CANAL CORPORATION

SUBSURFACE EXPLORATION LOG

PSN		BORNUM	B-3
DIVISION	Albany	**HOLE**	DN-B
COUNTY	Ulster	**LINE**	NB East Shoulder
PIN		**STA**	
ROUTE	Thruway Mainline	**OFFSET**	ft
MILEPOST	103.16	**SURF. ELEV.**	159.1205, NAD 88
PROJECT	Assignment 2 - NYSTA CR34 over Thruway Mainline Bridge Replacement	**DEPTH TO WATER**	

COORDINATES (Lat) 42.108384°N (Long) 73.957309°W

DATE START 3/28/2024 **DATE FINISH** 4/2/2024

AUGER							**WT OF HAMMER-CASING**		lb	**HAMMER FALL-CASING**	in
CASING	**O. D.**	4-1/2	in	**I. D.**	4	in	**WT OF HAMMER-SAMPLER**	140	lb	**HAMMER FALL-SAMPLER**	30 in
SAMPLER	**O. D.**	2	in	**I. D.**	1-3/8	in	**HAMMER TYPE**	Automatic			

CASING BLOWS/ft	DEPTH (ft.) BELOW SURFACE	SAMPLE NO.	BLOWS ON SAMPLER (in.) 0-6	6-12	12-18	18-24	MOIST. CONT. (%)	Soil Recovery (in.)	Rock Recovery (ft.)	DESCRIPTION OF SOIL AND ROCK	
										Pile Cap	
	0.0	SS1	7	10	9	7		18		Dark Brown cmf SAND; some Silt & Clay; little cf Gravel; Fill	M - LPL
		SS2	7	10	18	14		14		Dark Brown cf GRAVEL; and cmf Sand; trace Silt & Clay; Fill	M - LPL
	5.0	SS3	7	10	6	7				Brown CLAY; some cmf Sand; trace f Gravel; trace Silt; Fill	W - PL
										BOF 155.33'	
										Navg = 16, γ' = 130pcf, φ = 0deg, c = 3000psf	
		SS4	13	12	29	27		10		Brown CLAY; and cf Gravel; some cmf Sand; trace Silt; Cobble Fragments; Fill	W - PL
	10.0	SS5	11	14	17	24		7		Brown cf GRAVEL; and cmf Sand; little Silt & Clay; Fill	W - LPL
										Navg = 15, γ' = 125pcf, φ = 32deg, c = 0psf	
		SS6	9	7	12	11		15		Brown cf GRAVEL; and cmf Sand; little Silt & Clay; Fill	W - LPL
		SS7	9	7	4	2		9		Brown cmf SAND; some f Gravel; little Silt & Clay; Fill	S - LPL
	15.0	SS8	WH	WR/18"				0		NO RECOVERY	-
										Navg = 0, γ' = 100pcf, φ = 26deg, c = 0psf	
	20.0	SS9	16	18	20	14		8		Brown cf GRAVEL; some cmf Sand; trace clayey Silt; Fill	S - LPL
										Approximate water elev. = 138.62'	
										Navg = 38, γ' = 67.5pcf, φ = 36deg, c = 0psf	
	25.0	SS10	2	4				18		Brown CLAY & SILT; trace f Sand	W - PL
										Navg = 6, γ' = 57.6pcf, φ = 0deg, c = 750psf	

The subsurface information shown here was obtained for design and estimate purposes. It is made available so that users may have access to the same information available to the State. It is presented in good faith. By the nature of the exploration process, the information represents only a small fraction of the total volume of the material at the site. Interpolation between data samples may not be indicative of the actual material encountered.

DRILL RIG OPERATOR Robert Drake; Michael Keleher
SOIL & ROCK DESCRIPTION Jesse O'Dell (ATL)
INSPECTOR Jesse O'Dell (ATL)
BIN
STRUCTURE NAME

CONTRACT D214866 **CONTRACTOR** ATL

SHEET 1 OF 6 HOLE DN-B

TWY-CAN SUBSURF EXPLORATION CD10733.JMT THRUWAY - SAUGERTIES.GPJ TWYSE1TMPL_V05.GDT 8/1/24

SM 282 E 12/02

NEW YORK STATE THRUWAY AUTHORITY
NEW YORK STATE CANAL CORPORATION

SUBSURFACE EXPLORATION LOG

PSN		BORNUM B-3	
DIVISION	Albany	**HOLE**	DN-B
COUNTY	Ulster	**LINE**	NB East Shoulder
PIN		**STA**	
ROUTE	Thruway Mainline	**OFFSET**	ft
MILEPOST	103.16	**SURF. ELEV.**	159.1205, NAD 88
PROJECT	Assignment 2 - NYSTA CR34 over Thruway Mainline Bridge Replacement	**DEPTH TO WATER**	

COORDINATES (Lat) 42.108384°N (Long) 73.957309°W

DATE START 3/28/2024 **DATE FINISH** 4/2/2024

AUGER						**WT OF HAMMER-CASING**		lb	**HAMMER FALL-CASING**		in
CASING	**O. D.**	4-1/2	in	**I. D.**	4	in	**WT OF HAMMER-SAMPLER**	140	lb	**HAMMER FALL-SAMPLER**	30 in
SAMPLER	**O. D.**	2	in	**I. D.**	1-3/8	in	**HAMMER TYPE**	Automatic			

CASING BLOWS/ft	DEPTH (ft.) BELOW SURFACE	SAMPLE NO.	BLOWS ON SAMPLER (in.) 0/6	6/12	12/18	18/24	MOIST. CONT. (%)	Soil Recovery (in.)	Rock Recovery (ft.)	DESCRIPTION OF SOIL AND ROCK	
	25.0				4	7					
	30.0	SS11	2	2	2	4		24		Brown CLAY; trace f Sand; trace SILT	M - PL
	35.0	SS12	WR	WH/18"			45.4%	24		Greyish-Brown CLAY; trace mf Sand; trace SILT LL = 46, PL = 23, PI = 23 N_{avg} = 0, γ' = 37.6pcf, φ = 0deg, c = 250psf	W - PL
	40.0	SS13	WR/24"				53.3%	24		Grey CLAY; trace f Sand; trace SILT	W - PL
	45.0	SS14	WR/24"				50.6%	24		Greyish-Brown CLAY & SILT; trace f Sand	W - PL
	50.0	SS15	WR/24"				52.7%	24		Greyish-Brown Silty CLAY; trace f Sand	W - PL

The subsurface information shown here was obtained for design and estimate purposes. It is made available so that users may have access to the same information available to the State. It is presented in good faith. By the nature of the exploration process, the information represents only a small fraction of the total volume of the material at the site. Interpolation between data samples may not be indicative of the actual material encountered.

DRILL RIG OPERATOR Robert Drake; Michael Keleher
SOIL & ROCK DESCRIPTION Jesse O'Dell (ATL)
INSPECTOR Jesse O'Dell (ATL)
BIN
STRUCTURE NAME

CONTRACT D214866 **CONTRACTOR** ATL

SHEET 2 OF 6 HOLE DN-B

TWY-CAN SUBSURF EXPLORATION CD10733.JMT THRUWAY - SAUGERTIES.GPJ TWYSE1TMPL_V05.GDT 8/1/24

SM 282 E 12/02

NEW YORK STATE THRUWAY AUTHORITY
NEW YORK STATE CANAL CORPORATION

SUBSURFACE EXPLORATION LOG

PSN _____ BORNUM B-3
DIVISION Albany
COUNTY Ulster
PIN
ROUTE Thruway Mainline
MILEPOST 103.16
PROJECT Assignment 2 - NYSTA CR34 over Thruway Mainline Bridge Replacement

HOLE DN-B
LINE NB East Shoulder
STA
OFFSET ft
SURF. ELEV. 159.1205, NAD 88
DEPTH TO WATER

COORDINATES (Lat) 42.108384°N (Long) 73.957309°W
DATE START 3/28/2024 **DATE FINISH** 4/2/2024

AUGER
CASING O. D. 4-1/2 in I. D. 4 in
SAMPLER O. D. 2 in I. D. 1-3/8 in

WT OF HAMMER-CASING lb **HAMMER FALL-CASING** in
WT OF HAMMER-SAMPLER 140 lb **HAMMER FALL-SAMPLER** 30 in
HAMMER TYPE Automatic

CASING BLOWS/ft	DEPTH (ft.) BELOW SURFACE	SAMPLE NO.	BLOWS ON SAMPLER (in.) 0/6 6/12 12/18 18/24	MOIST. CONT. (%)	Soil Recovery (in.)	Rock Recovery (ft.)	DESCRIPTION OF SOIL AND ROCK	
	50.0							
		SS16	WR/24"		24		Greyish-Brown Silty CLAY; trace f Sand	W - PL
	55.0							
		SS17	WR/24"		24		Grey CLAY; trace f Sand; trace SILT	W - PL
	60.0							
		SS18	WR/24"		24		Grey CLAY; trace f Sand; trace SILT	W - PL
	65.0							
		SS19	WR/24"		24		Grey CLAY; trace f Sand; trace SILT	W - PL
	70.0							
		SS20	WR/24"	44.7%	24		Grey CLAY; trace f Sand; trace SILT LL = 60, PL = 30, PI = 30	S - PL
	75.0							

The subsurface information shown here was obtained for design and estimate purposes. It is made available so that users may have access to the same information available to the State. It is presented in good faith. By the nature of the exploration process, the information represents only a small fraction of the total volume of the material at the site. Interpolation between data samples may not be indicative of the actual material encountered.

DRILL RIG OPERATOR Robert Drake; Michael Keleher
SOIL & ROCK DESCRIPTION Jesse O'Dell (ATL)
INSPECTOR Jesse O'Dell (ATL)
BIN
STRUCTURE NAME

CONTRACT D214866 **CONTRACTOR** ATL

SHEET 3 OF 6 HOLE DN-B

TWY-CAN SUBSURF EXPLORATION CD10733.JMT THRUWAY - SAUGERTIES.GPJ TWYSE1TMPL_V05.GDT 8/1/24

SM 282 E 12/02

NEW YORK STATE THRUWAY AUTHORITY
NEW YORK STATE CANAL CORPORATION

SUBSURFACE EXPLORATION LOG

PSN _____ BORNUM B-3
DIVISION Albany
COUNTY Ulster
PIN
ROUTE Thruway Mainline
MILEPOST 103.16
PROJECT Assignment 2 - NYSTA CR34 over Thruway Mainline Bridge Replacement

HOLE DN-B
LINE NB East Shoulder
STA
OFFSET ft
SURF. ELEV. 159.1205, NAD 88
DEPTH TO WATER

COORDINATES (Lat) 42.108384°N (Long) 73.957309°W
DATE START 3/28/2024 **DATE FINISH** 4/2/2024

AUGER
CASING O. D. 4-1/2 in I. D. 4 in
SAMPLER O. D. 2 in I. D. 1-3/8 in

WT OF HAMMER-CASING lb **HAMMER FALL-CASING** in
WT OF HAMMER-SAMPLER 140 lb **HAMMER FALL-SAMPLER** 30 in
HAMMER TYPE Automatic

CASING BLOWS/ft	DEPTH (ft.) BELOW SURFACE	SAMPLE NO.	BLOWS ON SAMPLER (in.) 0/6 6/12 12/18 18/24	MOIST. CONT. (%)	Soil Recovery (in.)	Rock Recovery (ft.)	DESCRIPTION OF SOIL AND ROCK	
	75.0							
		SS21	WR/24"		24		Grey Silty CLAY; trace f Sand	S - PL
	80.0							
		SS22	WR/24"		24		Grey CLAY; trace f Sand; trace SILT	W - LPL
	85.0							
		SS23	WR/24"		24		Grey CLAY; trace f Sand; trace SILT	S - PL
	90.0							
		SS24	WR/24"		12		Grey CLAY; trace f Sand; trace SILT	S - PL
	95.0							
		SS25	WR/24"		24		Grey CLAY; trace f Sand; trace SILT	S - PL
	100.0							

The subsurface information shown here was obtained for design and estimate purposes. It is made available so that users may have access to the same information available to the State. It is presented in good faith. By the nature of the exploration process, the information represents only a small fraction of the total volume of the material at the site. Interpolation between data samples may not be indicative of the actual material encountered.

DRILL RIG OPERATOR Robert Drake; Michael Keleher
SOIL & ROCK DESCRIPTION Jesse O'Dell (ATL)
INSPECTOR Jesse O'Dell (ATL)
BIN
STRUCTURE NAME

CONTRACT D214866 **CONTRACTOR** ATL

SHEET 4 OF 6 HOLE DN-B

TWY-CAN SUBSURF EXPLORATION CD10733.JMT THRUWAY - SAUGERTIES.GPJ TWYSE1TMPL_V05.GDT 8/1/24

SM 282 E 12/02

NEW YORK STATE THRUWAY AUTHORITY
NEW YORK STATE CANAL CORPORATION

SUBSURFACE EXPLORATION LOG

PSN _____ BORNUM B-3
DIVISION Albany
COUNTY Ulster
PIN
ROUTE Thruway Mainline
MILEPOST 103.16
PROJECT Assignment 2 - NYSTA CR34 over Thruway Mainline Bridge Replacement

HOLE DN-B
LINE NB East Shoulder
STA
OFFSET ft
SURF. ELEV. 159.1205, NAD 88
DEPTH TO WATER

COORDINATES (Lat) 42.108384°N (Long) 73.957309°W
DATE START 3/28/2024 **DATE FINISH** 4/2/2024

AUGER
CASING O. D. 4-1/2 in I. D. 4 in
SAMPLER O. D. 2 in I. D. 1-3/8 in

WT OF HAMMER-CASING lb **HAMMER FALL-CASING** in
WT OF HAMMER-SAMPLER 140 lb **HAMMER FALL-SAMPLER** 30 in
HAMMER TYPE Automatic

CASING BLOWS/ft	DEPTH (ft.) BELOW SURFACE	SAMPLE NO.	BLOWS ON SAMPLER (in.) 0/6 6/12 12/18 18/24	MOIST. CONT. (%)	Soil Recovery (in.)	Rock Recovery (ft.)	DESCRIPTION OF SOIL AND ROCK	
	100.0							
		SS26	WR/24"		24		Grey CLAY; trace f Sand; trace SILT	S - PL
	105.0							
		SS27	WR/24"		24		Grey CLAY; trace f Sand; trace SILT	S - PL
	110.0							
		SS28	WR/24"		24		Grey CLAY; trace f Sand; trace SILT	S - PL
	115.0							
		SS29	WR/24"		24		Grey CLAY; trace f Sand; trace SILT	S - PL
	120.0							
		SS30	WR/24"		24		Grey CLAY; trace f Sand; trace SILT	S - PL
	125.0							

The subsurface information shown here was obtained for design and estimate purposes. It is made available so that users may have access to the same information available to the State. It is presented in good faith. By the nature of the exploration process, the information represents only a small fraction of the total volume of the material at the site. Interpolation between data samples may not be indicative of the actual material encountered.

DRILL RIG OPERATOR Robert Drake; Michael Keleher
SOIL & ROCK DESCRIPTION Jesse O'Dell (ATL)
INSPECTOR Jesse O'Dell (ATL)
BIN
STRUCTURE NAME

CONTRACT D214866 **CONTRACTOR** ATL

SHEET 5 OF 6 HOLE DN-B

TWY-CAN SUBSURF EXPLORATION CD10733.JMT THRUWAY - SAUGERTIES.GPJ TWYSE1TMPL_V05.GDT 8/1/24

SM 282 E 12/02

NEW YORK STATE THRUWAY AUTHORITY
NEW YORK STATE CANAL CORPORATION

SUBSURFACE EXPLORATION LOG

PSN		BORNUM B-3	
DIVISION	Albany	**HOLE**	DN-B
COUNTY	Ulster	**LINE**	NB East Shoulder
PIN		**STA**	
ROUTE	Thruway Mainline	**OFFSET**	ft
MILEPOST	103.16	**SURF. ELEV.**	159.1205, NAD 88
PROJECT	Assignment 2 - NYSTA CR34 over Thruway Mainline Bridge Replacement	**DEPTH TO WATER**	

COORDINATES (Lat) 42.108384°N (Long) 73.957309°W

DATE START 3/28/2024 **DATE FINISH** 4/2/2024

AUGER							**WT OF HAMMER-CASING**		lb	**HAMMER FALL-CASING**	in
CASING	**O. D.**	4-1/2	in	**I. D.**	4	in	**WT OF HAMMER-SAMPLER**	140	lb	**HAMMER FALL-SAMPLER**	30 in
SAMPLER	**O. D.**	2	in	**I. D.**	1-3/8	in	**HAMMER TYPE**	Automatic			

CASING BLOWS/ft	DEPTH (ft.) BELOW SURFACE	SAMPLE NO.	BLOWS ON SAMPLER (in.) 0/6	6/12	12/18	18/24	MOIST. CONT. (%)	Soil Recovery (in.)	Rock Recovery (ft.)	DESCRIPTION OF SOIL AND ROCK
	125.0									Advanced 3 7/8" tri-cone roller bit to 130.0 feet. Encountered bedrock at 130.0 feet, however borehole caved and casing broke before rock was able to be cored.
	130.0									BOTTOM OF HOLE AT 130.00 ft

Bedrock

Notes:
1. Borehole backfilled with on-site soils.

DATE	TIME	DEPTH (ft.) HOLE	CASING	WATER	ARTESIAN HEAD HEIGHT ABOVE GROUND	FILLED WITH WATER AT END OF DAY
28-Mar-24	12:00	14.00	14.00	5.00		
29-Mar-24	08:00	14.00	14.00	DRY		
29-Mar-24	12:30	CAVED	25.00	DRY		
02-Apr-24	08:00	126.00	25.00	36.00		

The subsurface information shown here was obtained for design and estimate purposes. It is made available so that users may have access to the same information available to the State. It is presented in good faith. By the nature of the exploration process, the information represents only a small fraction of the total volume of the material at the site. Interpolation between data samples may not be indicative of the actual material encountered.

DRILL RIG OPERATOR Robert Drake; Michael Keleher
SOIL & ROCK DESCRIPTION Jesse O'Dell (ATL)
INSPECTOR Jesse O'Dell (ATL)
BIN
STRUCTURE NAME

CONTRACT D214866 **CONTRACTOR** ATL

SHEET 6 OF 6 HOLE DN-B

TWY-CAN SUBSURF EXPLORATION CD10733 JMT THRUWAY - SAUGERTIES.GPJ TWYSE1TMPL_V05.GDT 8/1/24

ANALYSES SUMMARY

Analyses Summary (Begin Abutment)

1. First Analysis (GROUP)

Symbol	Value	Unit	Description	Output from:
P =	175.29	Kips	Maximum pile axial load demand	Load Case 1
M_{z1} =	1598.3	Kip.ft	Maximum pile strong axis moment in top segment	Load Case 1
M_{z2} =	351	Kip.ft	Maximum pile strong axis moment in second segment	Load Case 1
My =	0.00	Kip.ft	Maximum pile weak axis moment	Load Case 1
L_1 =	7.3	ft	Unbraced length for top segment	Load Case 1
L_2 =	23.36	ft	Unbraced length for second segment	Load Case 1
Δ_x =	0.1249	in	Pile Settlement	Load Case 1
Δ_y =	1.07	in	Pile displacement in Y axis (Temperature movement)	From Structures
Δ_z =	0	in	Pile displacement in Z axis	Load Case 1

2. Second Analysis (LPILE)

Symbol	Value	Unit	Description
M_{z2} =	301.7	Kip.ft	Maximum pile strong axis moment in second segment
L_1 =	3.9	ft	Unbraced length for top segment
L_2 =	18.6	ft	Unbraced length for second segment
V =	131	Kips	Maximum shear force in pile

Analyses Summary (End Abutment)

1. First Analysis (GROUP)

Symbol	Value	Unit	Description	Output from:
P =	167.8	Kips	Maximum pile axial load demand	Load Case 1
M_{z1} =	1517.2	Kip.ft	Maximum pile strong axis moment in top segment	Load Case 1
M_{z2} =	298.0	Kip.ft	Maximum pile strong axis moment in second segment	Load Case 1
My =	0.00	Kip.ft	Maximum pile weak axis moment	Load Case 1
L_1 =	7.8	ft	Unbraced length for top segment	Load Case 1
L_2 =	18.62	ft	Unbraced length for second segment	Load Case 1
Δ_x =	0.0902	in	Pile Settlement	Load Case 1
Δ_y =	1.07	in	Pile displacement in Y axis (Temperature movement)	From Structures
Δ_z =	0	in	Pile displacement in Z axis	Load Case 1

2. Second Analysis (LPILE)

Symbol	Value	Unit	Description
M_{z2} =	256.2	Kip.ft	Maximum pile strong axis moment in second segment
L_1 =	4	ft	Unbraced length for top segment
L_2 =	18.8	ft	Unbraced length for second segment
V =	127.6	Kips	Maximum shear force in pile

PILE MODELING IN GROUP AND LPILE

PILE SECTION DEFINITION

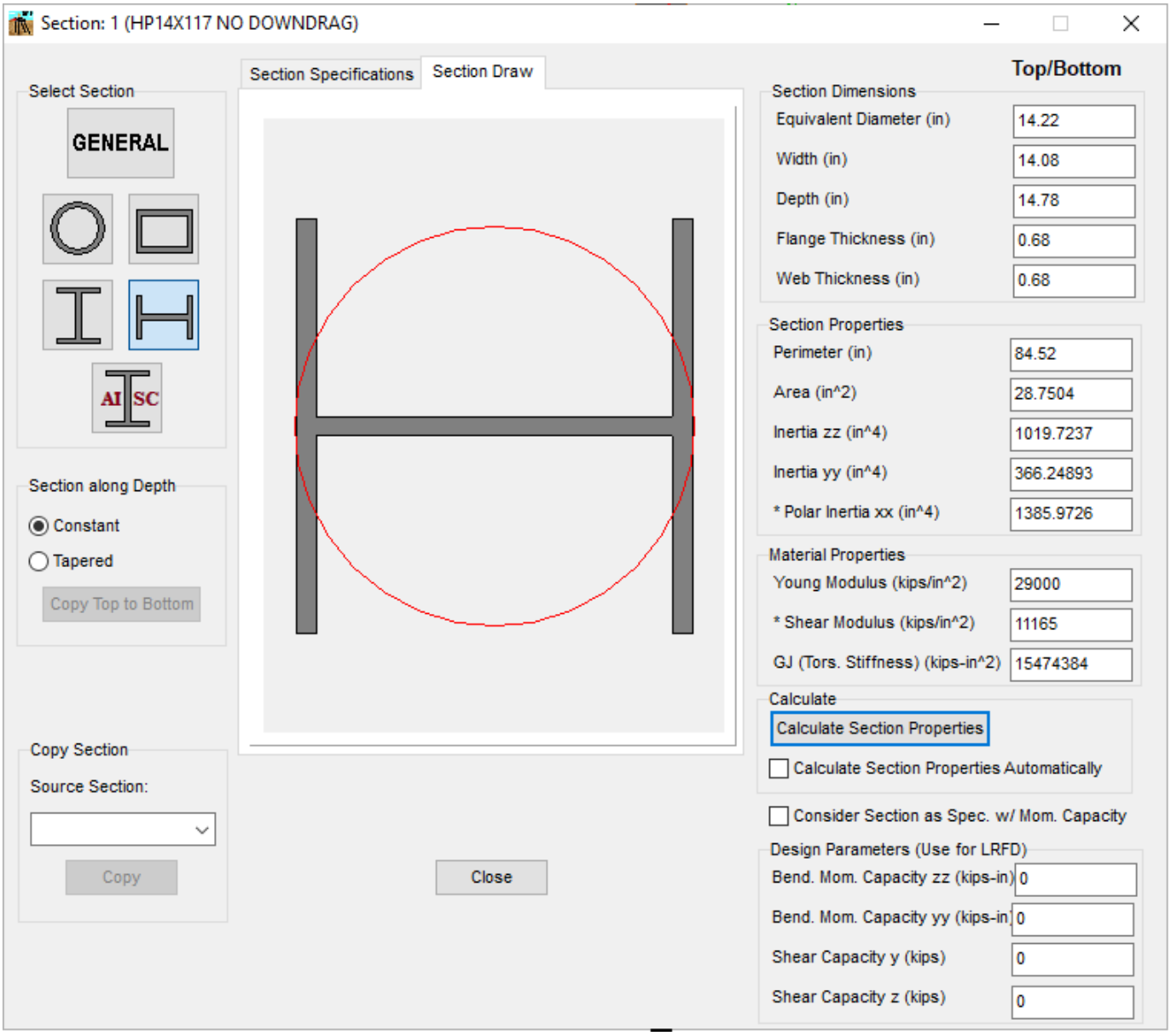

PILE TOP VIEW

BEGIN ABUTMENT

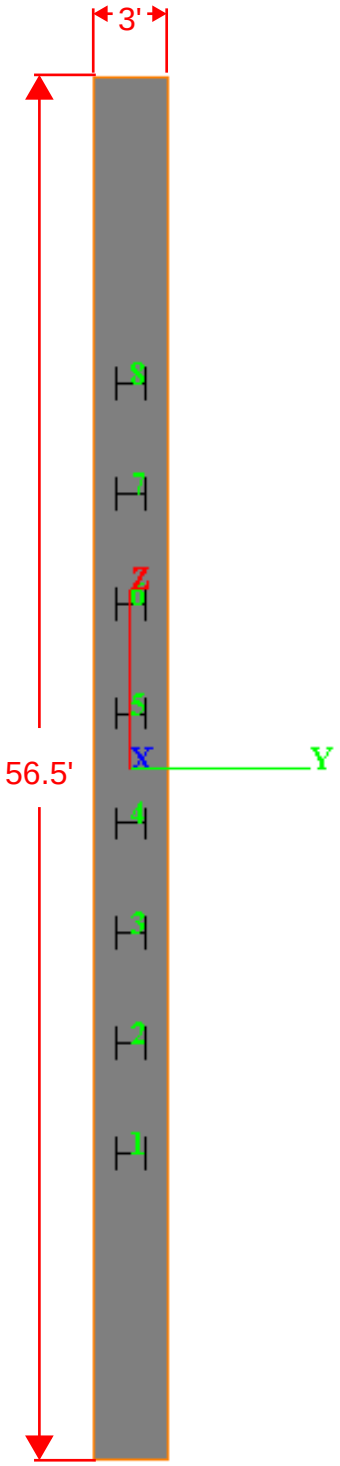

FOUNDATION ELEVATION WITH SOIL LAYERS

BEGIN ABUTMENT

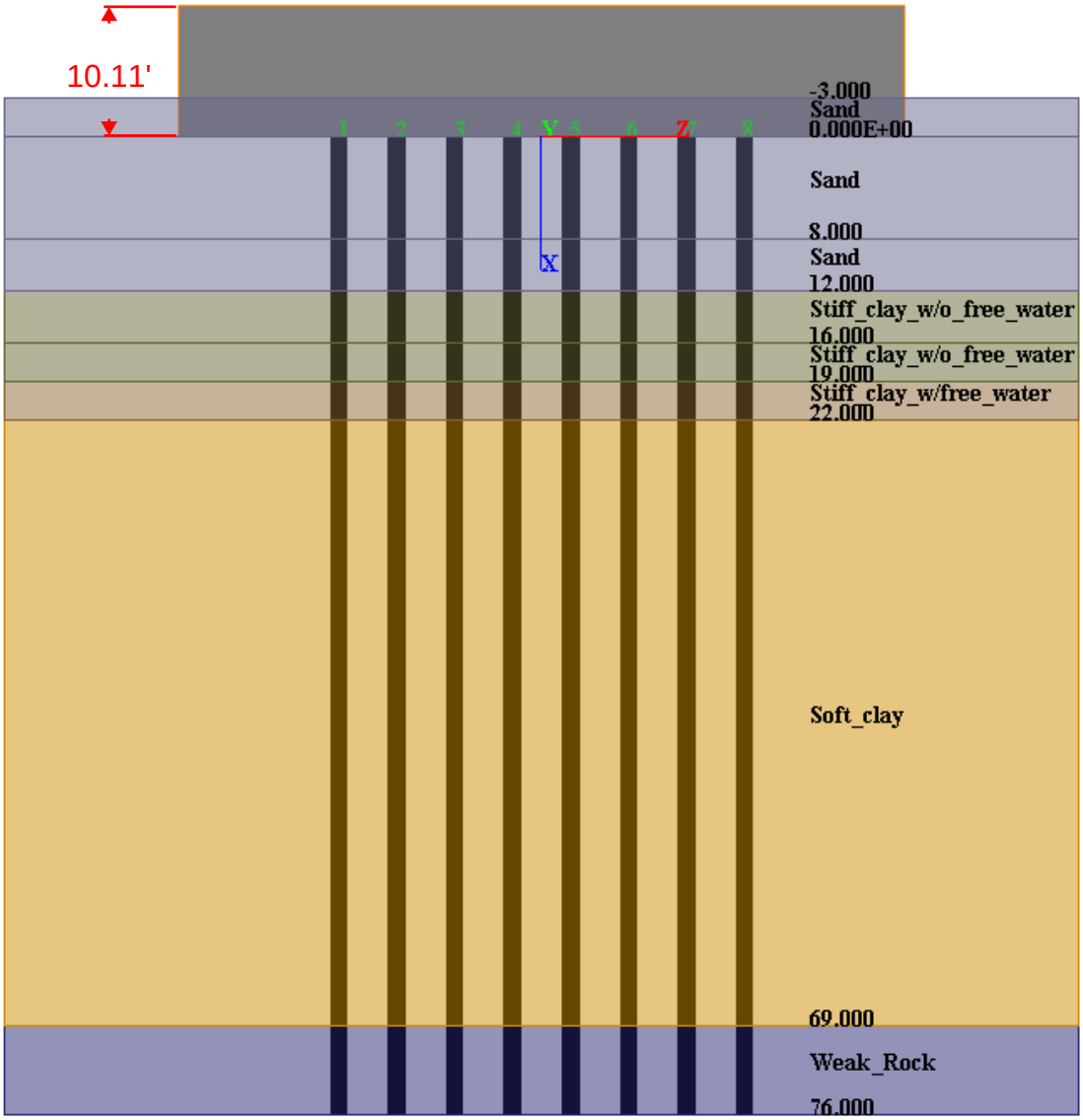

FOUNDATION 3D VIEW

BEGIN ABUTMENT

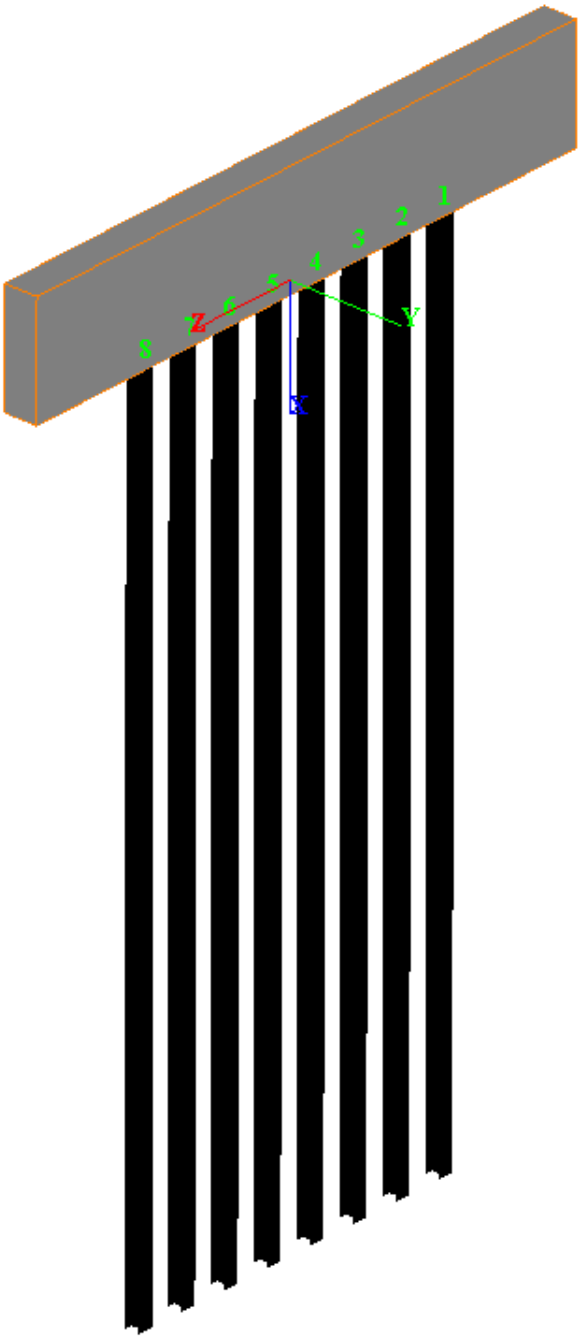

PILE TOP VIEW

END ABUTMENT

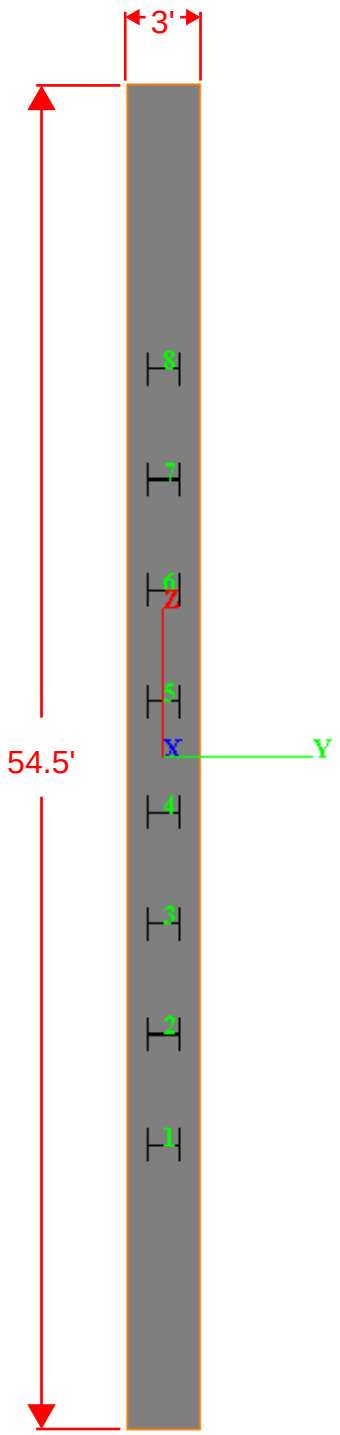

FOUNDATION ELEVATION WITH SOIL LAYERS

END ABUTMENT

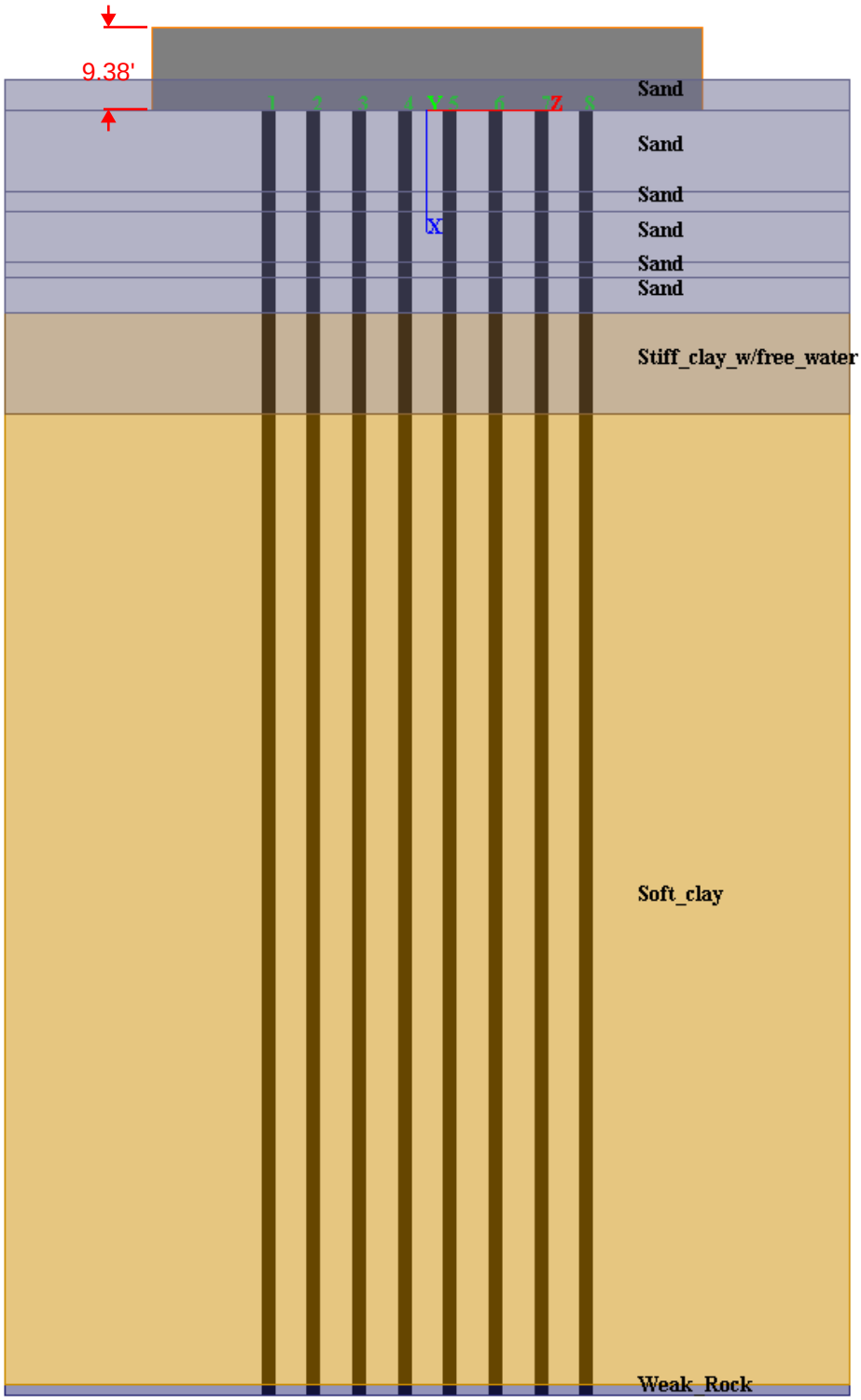

FOUNDATION 3D VIEW

END ABUTMENT

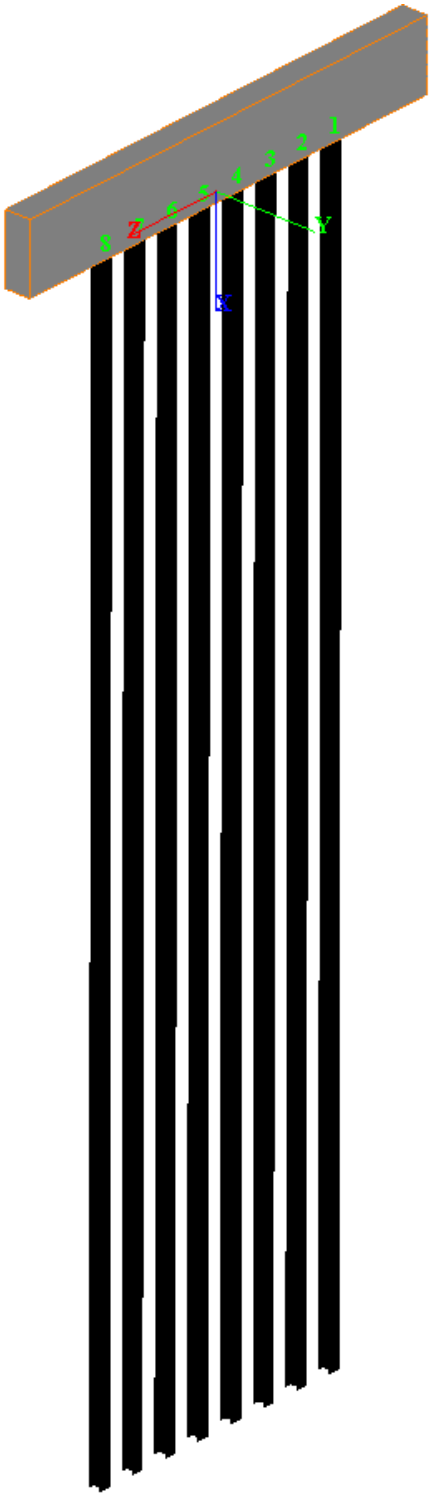

LPILE SOIL PROFILE

BEGIN ABUTMENT

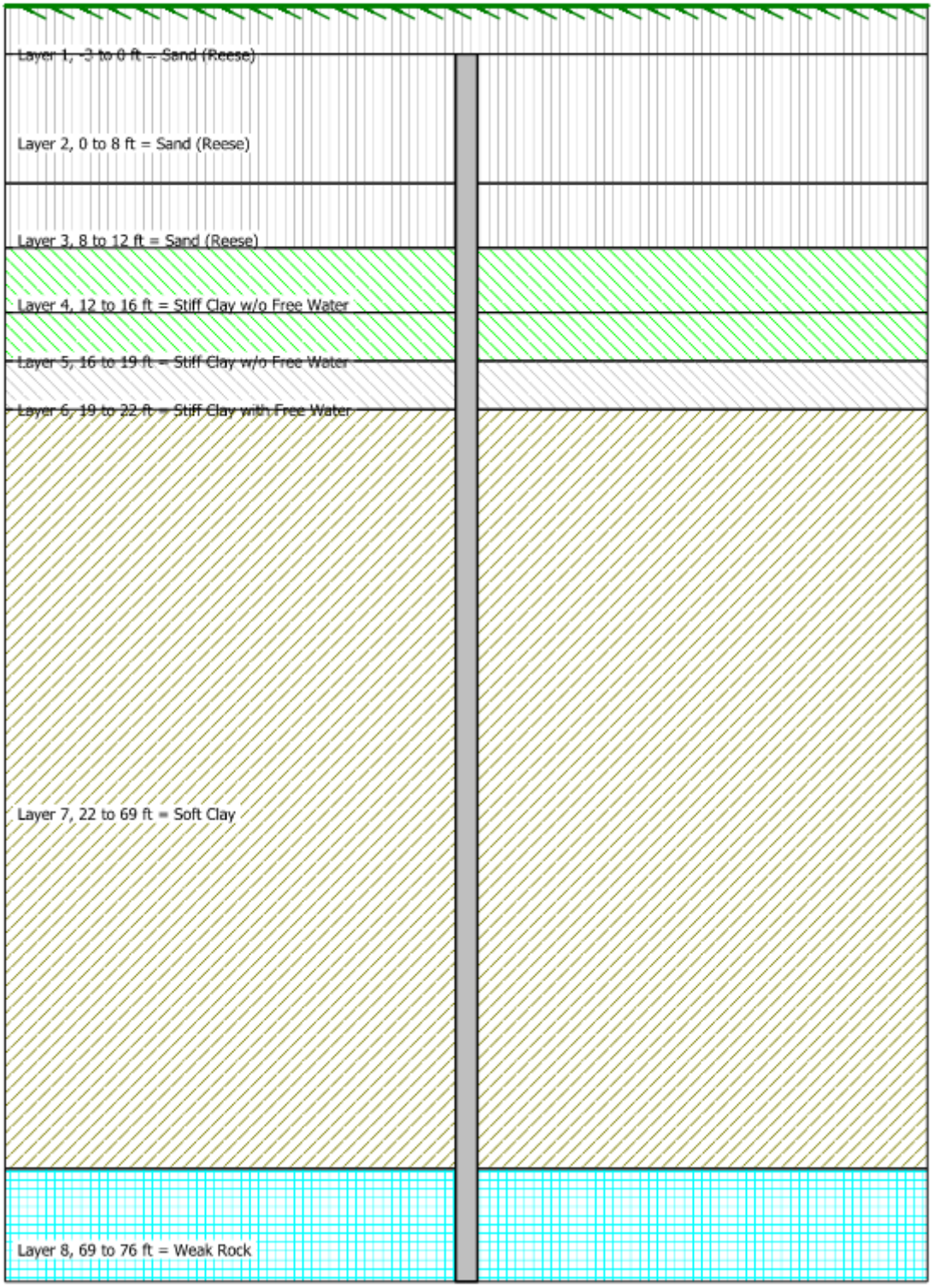

LPILE SOIL PROFILE

END ABUTMENT

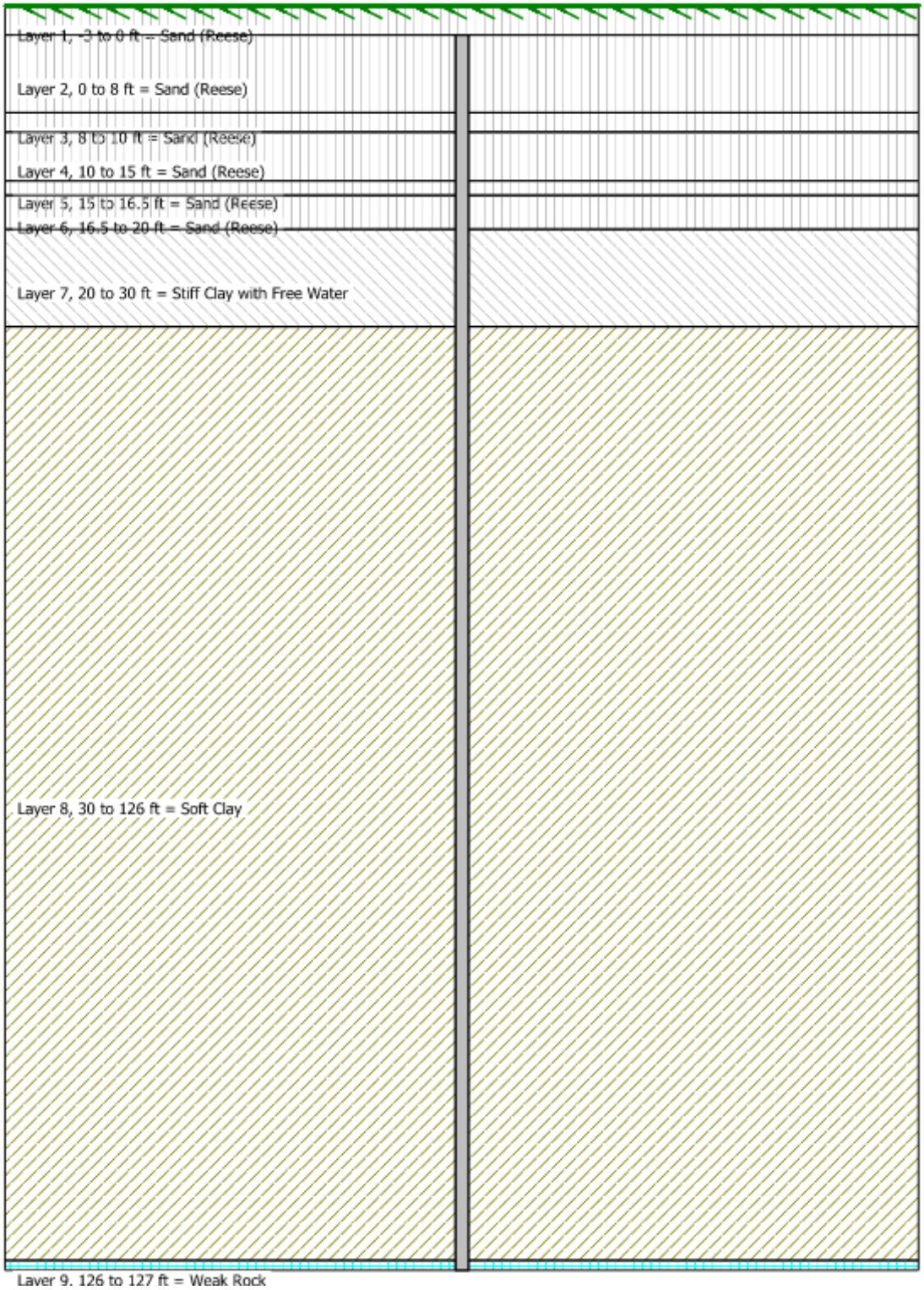

GEOTECHNICAL DESIGN
BEGIN ABUTMENT

Geotechnical Design

The proposed foundation consists of installation of piles in 30" diameter augured holes extending in to a sound rock. Loose sand shall be placed in the annular place around the pile. The loose sand shall extend to a depth of 8 ft.

H Pile Section: ***HP14X117***

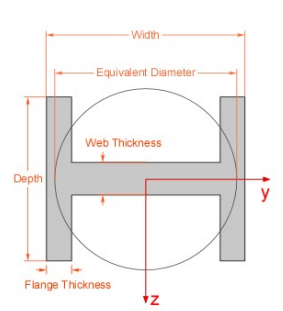

$b_s := 14.2 \cdot in$ (Width)

$d_s := 14.9 \cdot in$ (Depth)

$t_{fs} := 0.805 \cdot in$ (Flange thickness)

$t_{ws} := 0.805 \cdot in$ (Web thickness)

Subtract 1/16" all around these dimensions to account for corrosion.

$b'_s := b_s - 2 \cdot \left(\frac{1}{16}\right) \cdot in$ $\quad b'_s = 14.08\ in$

$d'_s := d_s - 2 \cdot \left(\frac{1}{16}\right) \cdot in$ $\quad d'_s = 14.78\ in$

$t'_{fs} := t_{fs} - 2 \cdot \left(\frac{1}{16}\right) \cdot in$ $\quad t'_{fs} = 0.68\ in$

$t'_{ws} := t_{ws} - 2 \cdot \left(\frac{1}{16}\right) \cdot in$ $\quad t'_{ws} = 0.68\ in$

$S' := 4.5\ ft$ (Minimum Spacing of Piles)

$S_{min} := 3 \cdot b_s = 3.55\ ft$ (Minimum Pile Spacing, NYSDOT GDM Sec. 11.9.2.1)

$Check_1 :=$ if $S' \geq S_{min}$ "Pile Spacing is OKAY" else "Pile Spacing is NOT OKAY"

$Check_1 =$ "Pile Spacing is OKAY"

$P_{pile} := 175.29\ kip$ Maximum Pile Axial load

$q_u := 15000\ psi$ (Ultimate bearing stress on rock (based on rock test result on DN-B-1))

Using Hard-Bite Point Model *HP-77750-B* Pile shoe:

$A' := 1.0\ in - 2 \cdot \frac{1}{16}\ in = 0.88\ in$

$B' := 1.625\ in - 2 \cdot \frac{1}{16}\ in = 1.5\ in$

$A_{pile_shoe} := 2 \cdot b'_s \cdot A' + \left(d'_s - 2 \cdot A'\right) \cdot B' = 44.17\ in^2$ (Bearing area of pile shoe)

$\varphi := 0.5$ (Resistance factor for Geotech capacity in Rock (AASHTO Table 10.5.5.2.4-1))

Factored pile capacity:

$Q_\varphi := \varphi \cdot (q_u \cdot A_{pile_shoe}) = 331\ kip$

$Check := \left\| \begin{array}{l} \text{if } Q_\varphi > P_{pile} \\ \quad \text{"Okay"} \\ \text{else} \\ \quad \text{"Not Okay"} \end{array} \right. = \text{"Okay"}$

$\frac{P_{pile}}{Q_\varphi} = 53\%$

Deflection of Pile

Deflections have been obtained from First analysis (using GROUP program).

$\Delta_x := 0.071 \cdot in$ (Max vertical displacement of pile under Service load condition)

$\Delta_y := 1.07 \cdot in$ (Max horizontal displacement of pile in y-direction under Service load condition)

$\Delta_z := 0 \cdot in$ (Max horizontal displacement of pile in z-direction under Service load condition)

$\delta_v := 1 \cdot in$ (Max. allowable vertical displacement of pile, NYSDOT GDM 11.9.2.6.2)

$\delta_H := 0.5 \cdot in$ (Max. allowable horizontal displacement of pile, NYSDOT GDM 11.9.2.6.2)

$Check_{deflection} := \left\| \begin{array}{l} \text{if } (\Delta_x \le \delta_v) \wedge \left(\sqrt{\Delta_y^2 + \Delta_z^2} \le \delta_H\right) \\ \quad \text{"Deflection of pile is within the tolerable limit"} \\ \text{else} \\ \quad \text{"Deflection of pile exceeds the tolerable limit"} \end{array} \right. = \text{"Deflection of pile exceeds the tolerable limit"}$

Although the pile top deflection of 1.07 inches exceeds the 0.5-inch limit in the NYSDOT GDM, this is acceptable for integral abutment design, which inherently provides a flexible foundation system intended to accommodate thermal movements. The simplified method conservatively applies the full thermal displacement without considering the stiffness of the abutment and backfill, which significantly restrain actual movement. Therefore, the real pile deflection will be substantially less than 1.07 inches, ensuring performance remains within acceptable limits.

ANALYSIS GRAPHS
BEGIN ABUTMENT

Analysis - 1 (in GROUP)
Pile Head Fixed

Temperature displacement and Live load & superimposed dead load rotation were applied to the pile in the model.

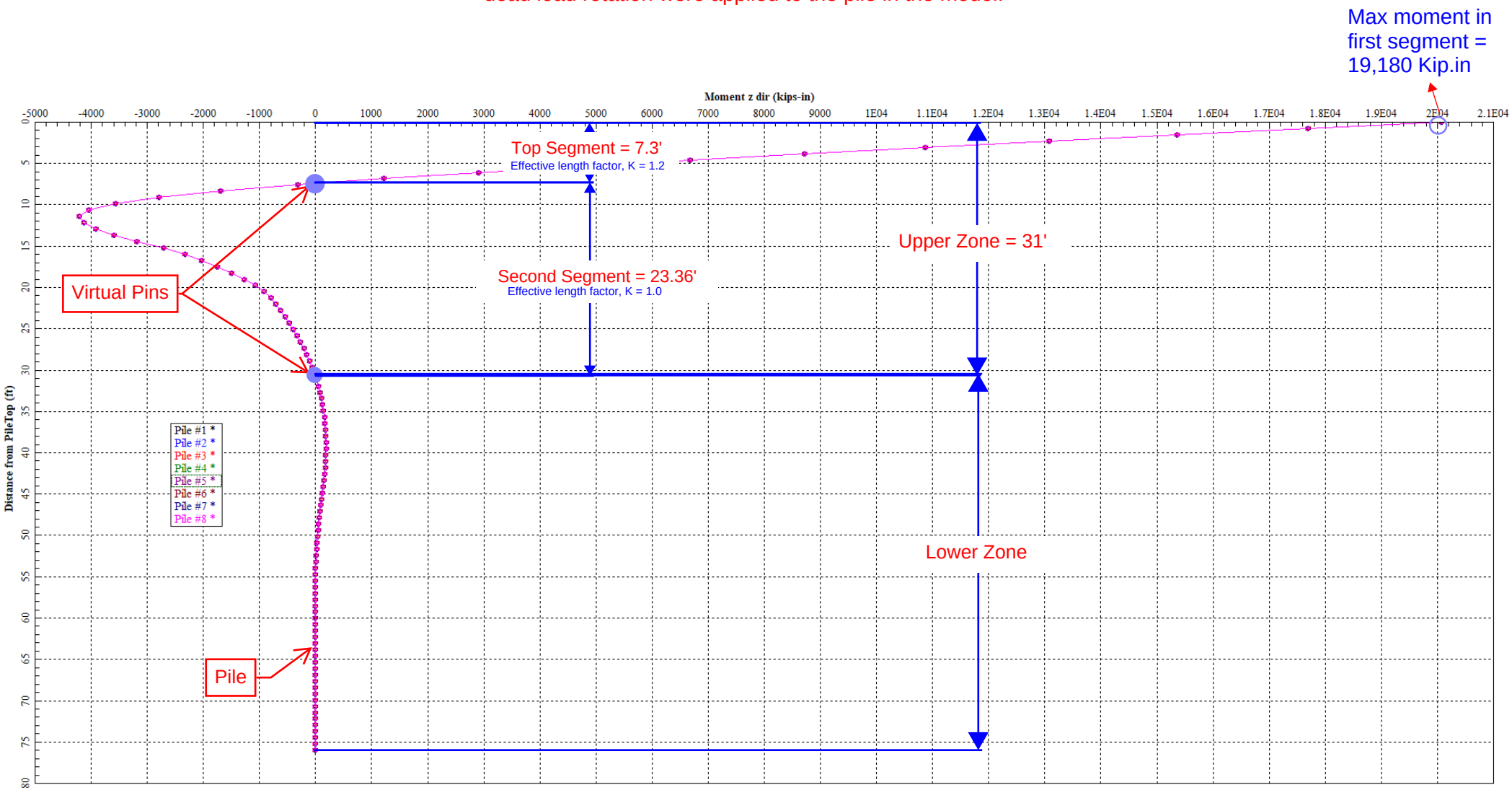

Analysis - 1 (in GROUP)
Pile Head Fixed

Temperature displacement and Live load & superimposed dead load rotation were applied to the pile in the model.

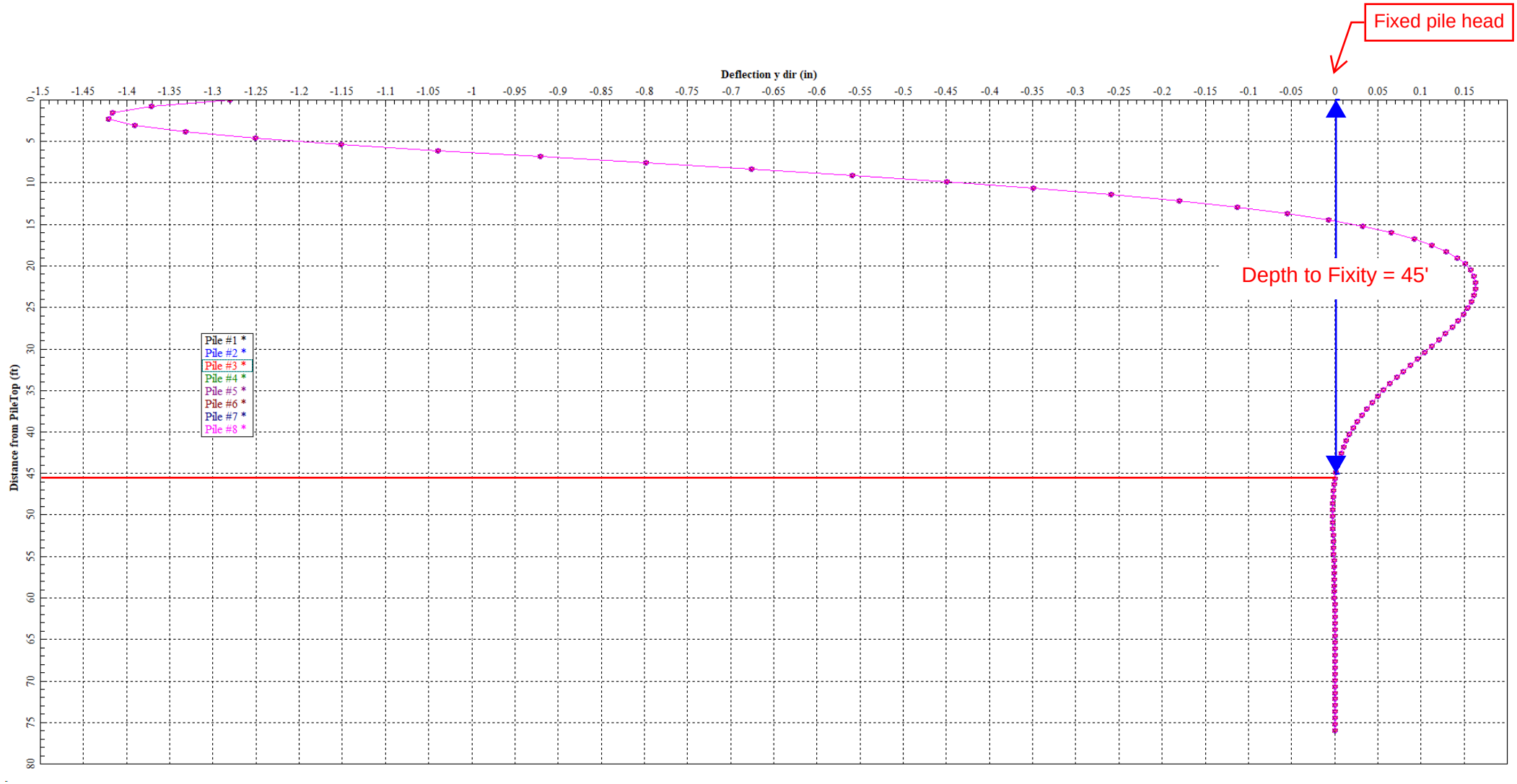

Analysis - 2 (in LPILE)
Pile Head Pinned

Temperature displacement and a moment equal to plastic moment capacity were applied to the pile in the model.

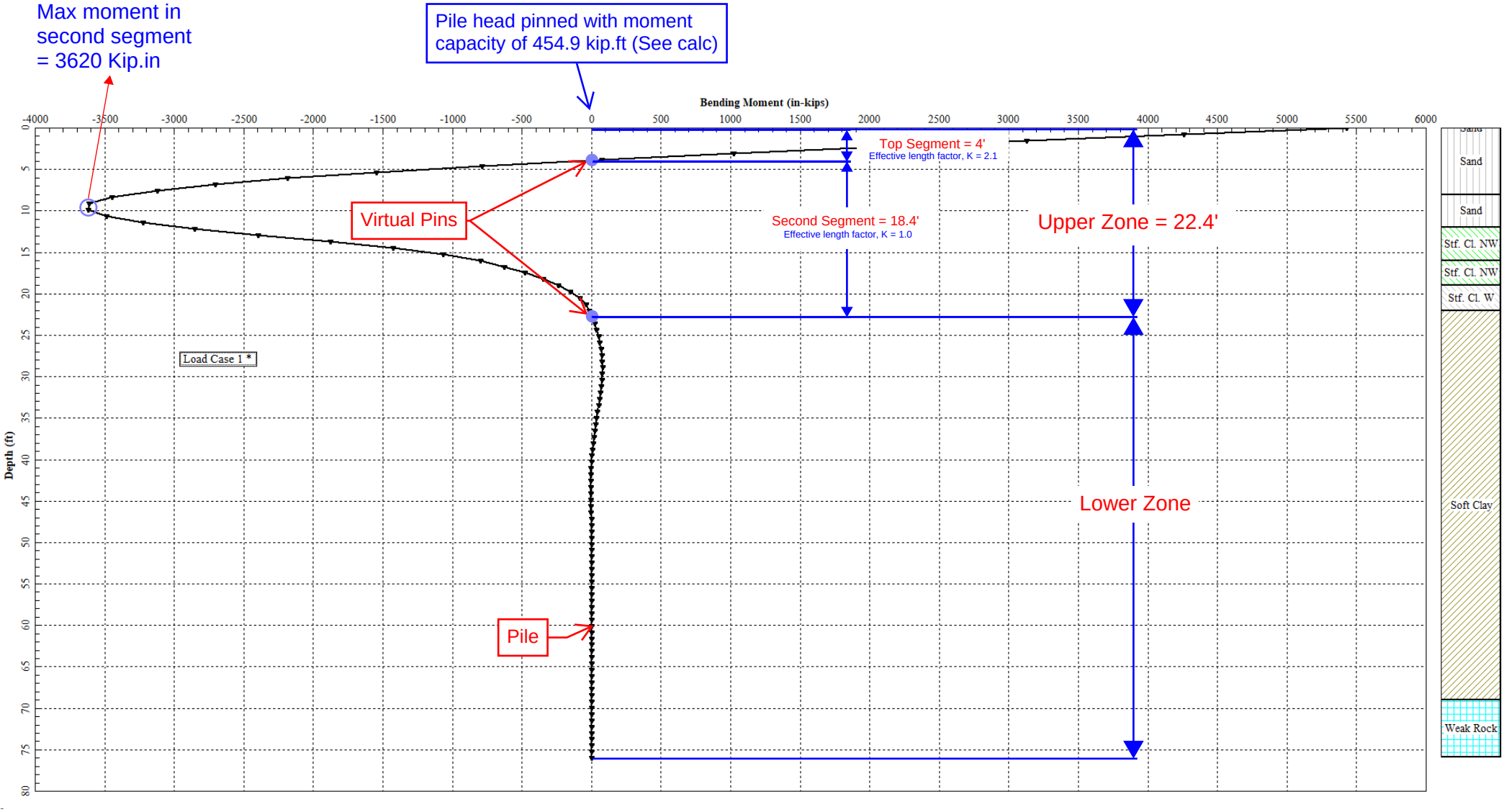

Analysis - 2 (in LPILE)
Pile Head Pinned

Temperature displacement and a moment equal to plastic moment capacity were applied to the pile in the model.

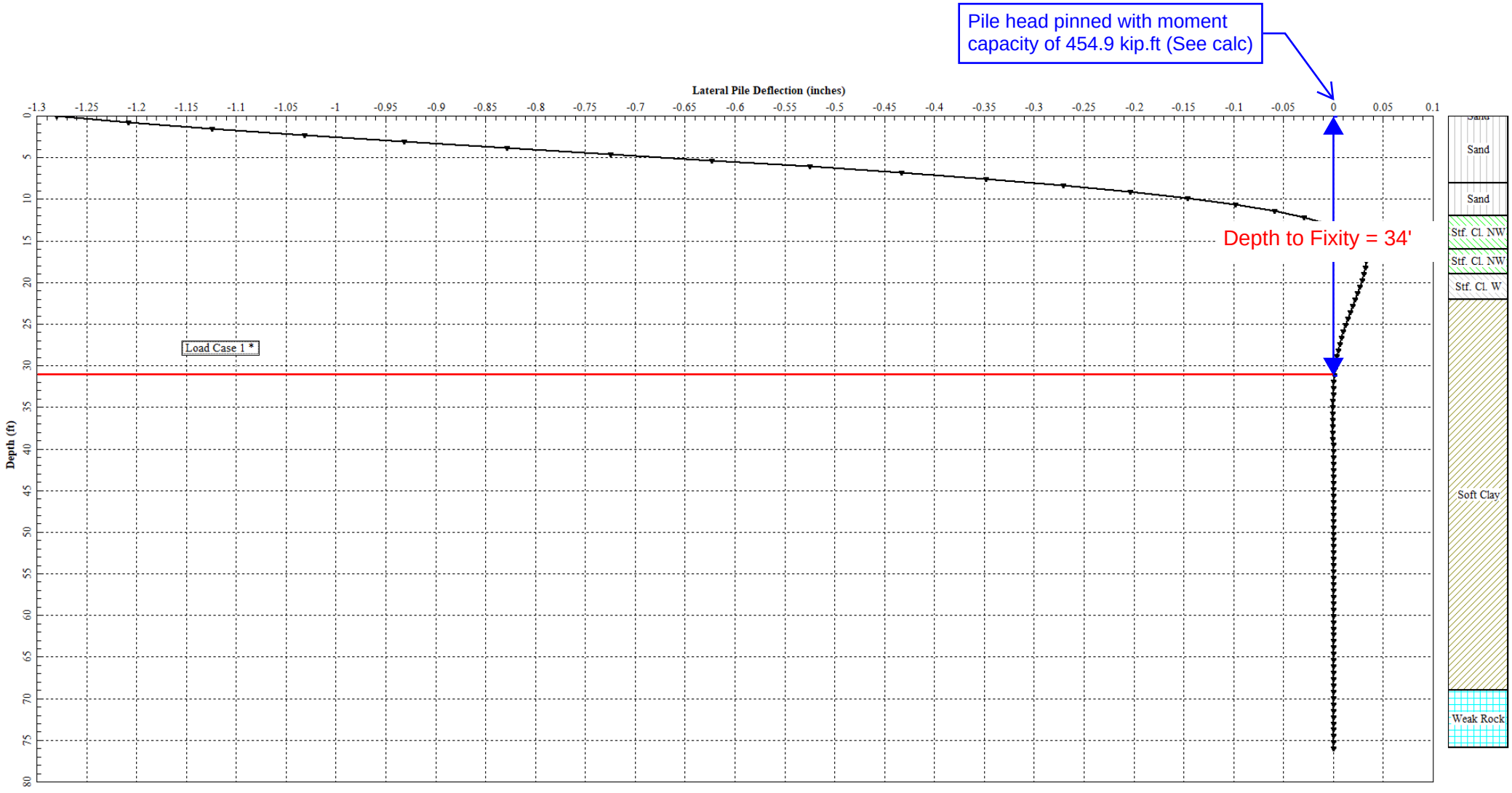

PILE STRUCTURAL DESIGN
BEGIN ABUTMENT

PILE STRUCTURAL DESIGN
BEGIN ABUTMENT

FIRST SEGMENT (FIRST ANALYSIS)

Top Segment - First Analysis
(Fixed Pile Head Condition)

References:

1. AASHTO LRFD Bridge Design Specifications, 19th Edition, 2020
2. NYSDOT LRFD Bridge Design Specifications - 2021
3. NYSDOT Geotechnical Design Manual
4. NYSDOT Bridge Manual - 2021
5. VTrans, Integral Abutment Bridge Design Guidelines

H Pile Section: ***HP14X117***

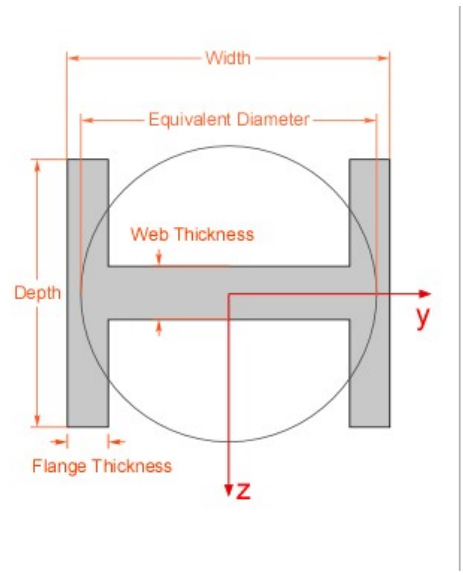

$b_s := 14.2 \cdot in$ (Width)

$d_s := 14.9 \cdot in$ (Depth)

$t_{fs} := 0.805 \cdot in$ (Flange thickness)

$t_{ws} := 0.805 \cdot in$ (Web thickness)

$E := 29000\ ksi$ (Steel Modulus of Elasticity)

$F_y := 50\ ksi$ (Yield Strength of Pile)

Subtract 1/16" all around these dimensions to account for corrosion.

$b'_s := b_s - 2 \cdot \left(\frac{1}{16}\right) \cdot in$ $\quad b'_s = 14.08\ in$

$d'_s := d_s - 2 \cdot \left(\frac{1}{16}\right) \cdot in$ $\quad d'_s = 14.78\ in$

$t'_{fs} := t_{fs} - 2 \cdot \left(\frac{1}{16}\right) \cdot in$ $\quad t'_{fs} = 0.68\ in$

$t'_{ws} := t_{ws} - 2 \cdot \left(\frac{1}{16}\right) \cdot in$ $\quad t'_{ws} = 0.68\ in$

$L_b := 7.3 \cdot ft$ (Unbraced length for top segment (Distance from bottom of pile cap to first point of zero moment, from GROUP Analysis)

$K_e := 1.2$ (Effective length factor, AASHTO Table C4.6.2.5-1)

Pile Applied loads

$P_{vertical} := 150.29\ kip$ (Pile vertical load due to superstructure loads (From GROUP))

$P_{earth_pressure} := 25\ kip$ (Additional pile load due to earth pressure, See Additional Load calculations)

$P_u := P_{vertical} + P_{earth_pressure} = 175.29\ kip$ (Factored Axial load on a single pile (From GROUP))

$M_{uy} := 0\ kip \cdot ft$ (Factored applied moment about pile weak axis)

$M_{uz} := 19180\ kip \cdot in = 1598.33\ kip \cdot ft$ (Factored applied moment about pile strong axis) (From GROUP)

Section Properties:

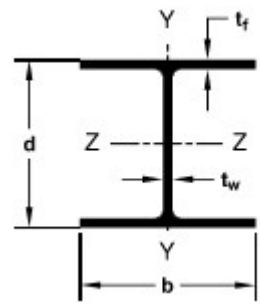

$b := d'_s$ (Width of flange)

$d := b'_s$ (Depth of section) $d = 14.08\ in$

$t_f := t'_{fs}$ (Thickness of flange) $t_f = 0.68\ in$

$t_w := t'_{ws}$ (Thickness of web) $t_w = 0.68\ in$

$h_w := d - 2 \cdot t_f$ (Height of web) $h_w = 12.72\ in$

$A_s := 2 \cdot t_f \cdot b + t_w \cdot h_w$ (Area of section) $A_s = 28.74\ in^2$

$I_y := \frac{t_f \cdot b^3}{6} + \frac{h_w \cdot t_w^3}{12}$ (Moment of inertia about y axis) $I_y = 365.88\ in^4$

$S_y := \frac{I_y}{\left(\frac{b}{2}\right)}$ (Elastic Section modulus about y axis) $S_y = 49.53\ in^3$

$Z_y := \frac{t_f \cdot b^2}{2} + \frac{h_w \cdot t_w^2}{4}$ (Plastic section modulus about y axis) $Z_y = 75.69\ in^3$

$r_y := \sqrt{\frac{I_y}{A_s}}$ (Radius of gyration about y axis) $r_y = 3.57\ in$

$I_z := \frac{b \cdot d^3}{12} - \frac{(b - t_w) \cdot h_w^3}{12}$ (Moment of inertia about z axis) $I_z = 1018.61\ in^4$

$S_z := \frac{I_z}{\left(\frac{d}{2}\right)}$ (Elastic section modulus about z axis) $S_z = 144.74\ in^3$

$Z_z := \frac{b \cdot d^2}{4} - \frac{(b - t_w) \cdot h_w^2}{4}$ (Plastic section modulus about z axis) $Z_z = 162.06\ in^3$

$r_z := \sqrt{\frac{I_z}{A_s}}$ (Radius of gyration about z axis) $r_z = 5.95\ in$

$\lambda := \frac{K_e \cdot L_b}{min(r_z, r_y)}$ (slenderness ratio of pile section) $\lambda = 29$

$\lambda_{limit} := 120$ (Limiting slenderness ratio, AASHTO Sec. 6.9.3)

```
Check4 := | if λ < λlimit
          |   "Good. Slenderness ratio within the limit"
          | else
          |   "Not Good. Slenderness ratio outside the limit"
```

$Check_4 =$ "Good. Slenderness ratio within the limit"

Axial Capacity of Pile Section

Check slenderness of section in compression (AASHTO Sec. 6.9.4.2.1)

$\lambda_{rf} := 0.56 \cdot \sqrt{\frac{E}{F_y}}$ (Limiting slenderness ratio of flange) $\lambda_{rf} = 13.49$

$\lambda_{rw} := 1.49 \cdot \sqrt{\frac{E}{F_y}}$ (Limiting slenderness ratio of web) $\lambda_{rw} = 35.88$

$\lambda_f := \frac{\left(\frac{b}{2}\right)}{t_f}$ (Slenderness ratio of flange) $\lambda_f = 10.86$

$\lambda_w := \frac{h_w}{t_w}$ (slenderness ratio of web) $\lambda_w = 18.7$

```
Slenderness := | if λf < λrf ∧ λw < λrw
               |   "Non-slender section. Local buckling effects can be neglected"
               | else
               |   "Slender section. Local buckling effects needs to be considered"
```

$Slenderness =$ "Non-slender section. Local buckling effects can be neglected"

Elastic critical buckling resistance based on flexural buckling (AASHTO Sec. 6.9.4.1.2)

$P_{ef} := \frac{\pi^2 \cdot E}{(\lambda)^2} \cdot A_s$ $P_{ef} = 9477\ kip$

Elastic critical buckling resistance based on torsional buckling (AASHTO Sec. 6.9.4.1.3)

$J_s := \frac{2 \cdot b \cdot t_f^3 + (d - t_f) \cdot t_w^3}{3}$ (St. Venant Constant) $J_s = 4.5\ in^4$

$C_w := \frac{I_y \cdot d^2}{4}$ (Warping torsional constant, AASHTO C6.9.4.1.3) $C_w = 18121\ in^6$

$KL := K_e \cdot L_b$ (Effective length for torsional buckling) $KL = 8.76\ ft$

$G' := 0.385 \cdot E$ (Shear modulus, AASHTO Sec. 6.9.4.1.3) $G' = 11165\ ksi$

$P_{eft} := \left(\frac{\pi^2 \cdot E \cdot C_w}{(KL)^2} + G' \cdot J_s \right) \cdot \frac{A_s}{I_y + I_z}$ $P_{eft} = 10786\ kip$

$P_e := min(P_{ef}, P_{eft})$ (Controlling Pe) $P_e = 9477\ kip$

Nominal Yield resistance (AASHTO Sec 6.9.4.1.1)

$P_o := F_y \cdot A_s$ $P_o = 1437\ kip$

Nominal Compressive resistance (AASHTO Sec. 6.9.4.1.1)

$$P_n := \begin{cases} \left(0.658^{\left(\frac{P_o}{P_e}\right)}\right) \cdot P_o & \text{if } \frac{P_o}{P_e} \le 2.25 \\ 0.877 \cdot P_e & \text{else} \end{cases}$$

$P_n = 1349\ kip$

$\phi_c := 0.6$ (Resistance factor for pile in compression, AASHTO 6.5.4.2)

$P_r := \phi_c \cdot P_n = 809.19\ kip$ (Factored axial capacity of pile in compression)

Flexural Capacity of Pile about strong axis (AASHTO 6.10.8)

The flexural capacity of the pile about the strong axis is the minimum of capacities obtained by the following three criteria

1. Compression flange local buckling
2. Compression flange lateral torsional buckling
3. Tension flange Yielding

1. Compression flange local buckling (AASHTO 6.10.8.2.2)

$\lambda_f = 10.86$

$F_{yr} := 0.7 \cdot F_y = 35$ ***ksi***

$\lambda_{pf} := 0.38 \cdot \sqrt{\frac{E}{F_y}}$ $\lambda_{pf} = 9.15$

$\lambda_{rf} := 0.56 \cdot \sqrt{\frac{E}{F_{yr}}} = 16.12$

$R_b := 1$ (Web load shedding factor, taken as 1.0)

$R_h := 1$ (Hybrid factor, taken as 1.0)

$$F_{nc_1} := \begin{cases} R_b \cdot R_h \cdot F_y & \text{if } \lambda_f \le \lambda_{pf} \\ \left(1 - \left(1 - \frac{F_{yr}}{R_h \cdot F_y}\right) \cdot \left(\frac{\lambda_f - \lambda_{pf}}{\lambda_{rf} - \lambda_{pf}}\right)\right) \cdot R_b \cdot R_h \cdot F_y & \text{else} \end{cases}$$

$F_{nc_1} = 46$ ***ksi***

2. <u>Compression flange lateral-torsional buckling (AASHTO 6.10.8.2.3)</u>

To find the depth of web in compression Dc, calculate the total compressive and tensile stresses due to axial load and bending.

$f_c := \frac{P_u}{A_s} + \frac{M_{uz}}{S_z}$ $f_c = 138.61$ ***ksi***

$f_t := -\left(\frac{P_u}{A_s}\right) + \frac{M_{uz}}{S_z}$ $f_t = 126.41$ ***ksi***

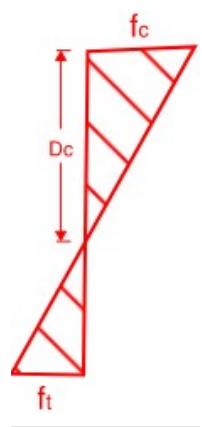

$$D_c := \begin{cases} h_w & \text{if } f_t < 0 \\ \frac{f_c}{f_c + f_t} \cdot d - t_f & \text{else} \end{cases}$$

$D_c = 6.68$ ***in***

$r_t := \frac{b}{\sqrt{12 \cdot \left(1 + \frac{1}{3} \cdot \frac{D_c \cdot t_w}{b \cdot t_f}\right)}}$ (Effective radius of gyration for lateral-torsional buckling) $r_t = 3.98$ ***in***

$C_b := 1.0$ (Moment gradient modifier, taken as 1.0 for simplicity)

$F_{cr} := \frac{C_b \cdot R_b \cdot \pi^2 \cdot E}{\left(\frac{L_b}{r_t}\right)^2}$ (Elastic lateral-torsional buckling stress) $F_{cr} = 590$ ***ksi***

$L_p := r_t \cdot \sqrt{\frac{E}{F_y}}$ $\qquad L_p = 96\ in$

$L_r := \pi \cdot r_t \cdot \sqrt{\frac{E}{F_{yr}}}$ $\qquad L_r = 360\ in$

$$F_{nc_2} := \begin{cases} R_b \cdot R_h \cdot F_y & \text{if } L_b \le L_p \\ min\left(C_b \cdot \left(1 - \left(1 - \frac{F_{yr}}{R_h \cdot F_y}\right) \cdot \left(\frac{L_b - L_p}{L_r - L_p}\right)\right) \cdot R_b \cdot R_h \cdot F_y, R_b \cdot R_h \cdot F_y\right) & \text{also if } L_p < L_b \le L_r \\ min\left(F_{cr}, R_b \cdot R_h \cdot F_y\right) & \text{else} \end{cases}$$

$F_{nc_2} = 50\ ksi$

3. Tension flange Yielding (AASHTO 6.10.8.3)

$F_{nt} := R_h \cdot F_y$ $\qquad F_{nt} = 50\ ksi$

Nominal moment capacity of the pile section about strong axis:

$M_{nz} := S_z \cdot min\left(F_{nc_1}, F_{nc_2}, F_{nt}\right)$ $\qquad M_{nz} = 559\ kip \cdot ft$

Flexural Capacity of Pile about weak axis (AASHTO 6.12.2.2-1)

$\lambda_{rf} := 0.83 \cdot \sqrt{\frac{E}{F_y}} = 19.99$ $\qquad \lambda_{pf} = 9.15$

$$M_{ny} := \begin{cases} F_y \cdot Z_y & \text{if } \lambda_f \le \lambda_{pf} \\ \left(1 - \left(1 - \frac{S_y}{Z_y}\right) \cdot \left(\frac{\lambda_f - \lambda_{pf}}{0.45 \cdot \sqrt{\frac{E}{F_y}}}\right)\right) \cdot F_y \cdot Z_y & \text{else if } \lambda_{pf} < \lambda_f \le \lambda_{rf} \end{cases} = 298.16\ kip \cdot ft$$

Combined Axial and Flexure (AASHTO 6.9.2.2.1)

The resistance factors for combined axial resistance and flexure resistance (AASHTO 6.5.4.2)

$\phi_f := 1.0$

$\phi_a := 0.7$

$M_{ry} := \phi_f \cdot M_{ny} = 298.16\ kip \cdot ft$

$M_{rz} := \phi_f \cdot M_{nz} = 558.62\ kip \cdot ft$

$P_r := \phi_a \cdot P_n$ $\qquad P_r = 944\ kip$

Check compactness of section (AASHTO A6.2.1 and A6.3.2)

Check for compactness ensures that the section is able to develop the full plastic moment.

$D_{cp} := \frac{h_w}{2} = 6.36\ in$ (Depth of web in compression at the plastic moment)

$M_y := F_y \cdot S_z = 603.1\ kip \cdot ft$ (Yield moment)

$Y' := \frac{h_w}{2} = 6.36\ in$ (Depth of plastic neutral axis, Table D6.1.1)

$M_p := F_y \cdot Z_z = 675.3\ kip \cdot ft$ (Plastic Moment)

$$a_{wc} := \frac{2 \cdot D_c \cdot t_w}{b \cdot t_f} = 0.9$$

$$\lambda_{rw} := min\left(\max\left(4.6 \cdot \sqrt{\frac{E}{F_y}}, \left(3.1 + \frac{5}{a_{wc}}\right) \cdot \sqrt{\frac{E}{F_y}}\right), 5.7 \cdot \sqrt{\frac{E}{F_y}}\right) = 137.27$$ (Equation A6.2.1-3)

Limiting Slenderness ratio for compact web:

$$\lambda_{pw_Dcp} := min\left(\left(\frac{\sqrt{\frac{E}{F_y}}}{0.54 \cdot \frac{M_p}{R_h \cdot M_y} - 0.09}\right), \lambda_{rw} \cdot \frac{D_{cp}}{D_c}\right) = 46.8$$ (Equation A6.2.1-2)

$$Compact_{web} := \left\| \begin{array}{l} \text{if } \frac{2 \cdot D_c}{t_w} < \lambda_{pw_Dcp} \\ \quad \text{"Compact Web"} \\ \text{else} \\ \quad \text{"Non Compact Web"} \end{array} \right\| = \text{"Compact Web"}$$

$$Compact_{flange} := \left\| \begin{array}{l} \text{if } \lambda_f < 0.38 \cdot \sqrt{\frac{E}{F_y}} \\ \quad \text{"Compact Flange"} \\ \text{else} \\ \quad \text{"Non Compact Flange"} \end{array} \right\| = \text{"Non Compact Flange"}$$

$$Compact_{Section} := \left\| \begin{array}{l} \text{if } Compact_{web} = \text{"Compact Web"} \wedge Compact_{flange} = \text{"Compact Flange"} \\ \quad \text{"Compact Section"} \\ \text{else} \\ \quad \text{"Non Compact Section"} \end{array} \right\| = \text{"Non Compact Section"}$$

Plastic Moment Capacity of the pile about strong axis:

$$M_{pz} := \left\| \begin{array}{l} \text{if } Compact_{Section} = \text{“Compact Section”} \\ \quad \left\| \begin{array}{l} \text{if } \dfrac{P_u}{P_r} < 0.2 \\ \quad \left\| \left(1 - \dfrac{P_u}{2 \cdot P_r} - \dfrac{M_{uy}}{M_{ry}}\right) \cdot M_{rz} \right. \\ \text{else} \\ \quad \left\| \left(\dfrac{9}{8} \cdot \left(1 - \dfrac{P_u}{P_r}\right) - \dfrac{M_{uy}}{M_{ry}}\right) \cdot M_{rz} \right. \end{array} \right. \\ \text{else} \\ \quad \left\| \left(1 - \dfrac{P_u}{P_r} - \dfrac{M_{uy}}{M_{ry}}\right) \cdot M_{rz} \right. \end{array} \right. = 454.9 \ kip \cdot ft$$

(AASHTO Eq. 6.9.2.2.1)

(Moment required to form plastic hinge in pile)

$$M_{pz} = 5458766 \ lbf \cdot in$$

$$Plastic_Hinge := \left\| \begin{array}{l} \text{if } M_{uz} > M_{pz} \\ \quad \left\| \text{“Plastic hinge forms at the pile head”} \right. \\ \text{else} \\ \quad \left\| \text{“Plastic hinge does not form”} \right. \end{array} \right. = \text{“Plastic hinge forms at the pile head”}$$

The bending moment along pile strong axis from GROUP analysis exceeds the plastic moment capacity of pile, resulting in plastic hinge formation just below the pile cap. The hinge moment capacity is equal to plastic moment capacity of the pile. Therefore, after the formation of the plastic hinge, the maximum moment that can be applied to the pile is equal to its plastic moment capacity.

A Second analysis will be performed in LPILE for a single pile with pinned head condition and a moment equal to the plastic moment capacity will be applied at the top of the pile along with the temperature displacement.

PILE STRUCTURAL DESIGN
BEGIN ABUTMENT

FIRST SEGMENT (SECOND ANALYSIS)

Top Segment - Second Analysis
(Pinned Pile Head Condition)

References:

1. AASHTO LRFD Bridge Design Specifications, 19th Edition, 2020
2. NYSDOT LRFD Bridge Design Specifications - 2021
3. NYSDOT Geotechnical Design Manual
4. NYSDOT Bridge Manual - 2021
5. VTrans, Integral Abutment Bridge Design Guidelines

H Pile Section: ***HP14X117***

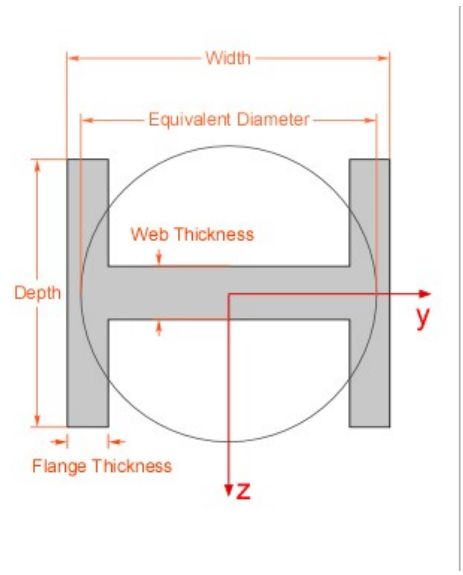

$b_s := 14.2 \cdot in$ (Width)

$d_s := 14.9 \cdot in$ (Depth)

$t_{fs} := 0.805 \cdot in$ (Flange thickness)

$t_{ws} := 0.805 \cdot in$ (Web thickness)

$E := 29000\ ksi$ (Steel Modulus of Elasticity)

$F_y := 50\ ksi$ (Yield Strength of Pile)

Subtract 1/16" all around these dimensions to account for corrosion.

$b'_s := b_s - 2 \cdot \left(\frac{1}{16}\right) \cdot in$ $\quad b'_s = 14.08\ in$

$d'_s := d_s - 2 \cdot \left(\frac{1}{16}\right) \cdot in$ $\quad d'_s = 14.78\ in$

$t'_{fs} := t_{fs} - 2 \cdot \left(\frac{1}{16}\right) \cdot in$ $\quad t'_{fs} = 0.68\ in$

$t'_{ws} := t_{ws} - 2 \cdot \left(\frac{1}{16}\right) \cdot in$ $\quad t'_{ws} = 0.68\ in$

$L_b := 3.9 \cdot ft$ (Unbraced length for first segment (Distance from bottom of pile cap to first point of zero moment, from LPILE Analysis)

$K_e := 2.1$ (Effective length factor, AASHTO Table C4.6.2.5-1)

Pile Applied loads

$P_{vertical} := 150.29\ kip$ (Pile vertical load due to superstructure loads (From GROUP))

$P_{earth_pressure} := 25\ kip$ (Additional pile load due to earth pressure, See Additional Load calculations)

$P_u := P_{vertical} + P_{earth_pressure} = 175.29\ kip$ (Factored Axial load on a single pile (From GROUP))

$V_u := 131\ kip$ (Factored maximum applied shear in pile (From LPILE))

Section Properties:

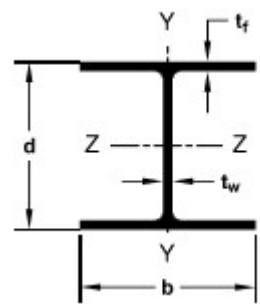

$b := d'_s$ (Width of flange)

$d := b'_s$ (Depth of section) $d = 14.08\ in$

$t_f := t'_{fs}$ (Thickness of flange) $t_f = 0.68\ in$

$t_w := t'_{ws}$ (Thickness of web) $t_w = 0.68\ in$

$h_w := d - 2 \cdot t_f$ (Height of web) $h_w = 12.72\ in$

$A_s := 2 \cdot t_f \cdot b + t_w \cdot h_w$ (Area of section) $A_s = 28.74\ in^2$

$I_y := \frac{t_f \cdot b^3}{6} + \frac{h_w \cdot t_w^3}{12}$ (Moment of inertia about y axis) $I_y = 365.88\ in^4$

$S_y := \frac{I_y}{\left(\frac{b}{2}\right)}$ (Elastic Section modulus about y axis) $S_y = 49.53\ in^3$

$Z_y := \frac{t_f \cdot b^2}{2} + \frac{h_w \cdot t_w^2}{4}$ (Plastic section modulus about y axis) $Z_y = 75.69\ in^3$

$r_y := \sqrt{\frac{I_y}{A_s}}$ (Radius of gyration about y axis) $r_y = 3.57\ in$

$I_z := \frac{b \cdot d^3}{12} - \frac{(b - t_w) \cdot h_w^3}{12}$ (Moment of inertia about z axis) $I_z = 1018.61\ in^4$

$S_z := \frac{I_z}{\left(\frac{d}{2}\right)}$ (Elastic section modulus about z axis) $S_z = 144.74\ in^3$

$Z_z := \frac{b \cdot d^2}{4} - \frac{(b - t_w) \cdot h_w^2}{4}$ (Plastic section modulus about z axis) $Z_z = 162.06\ in^3$

$r_z := \sqrt{\frac{I_z}{A_s}}$ (Radius of gyration about z axis) $r_z = 5.95\ in$

$\lambda := \frac{K_e \cdot L_b}{min(r_y, r_z)}$ (slenderness ratio of pile section) $\lambda = 28$

$\lambda_{limit} := 120$ (Limiting slenderness ratio, AASHTO Sec. 6.9.3)

$Check_4 :=$ if $\lambda < \lambda_{limit}$ "Good. Slenderness ratio within the limit" else "Not Good. Slenderness ratio outside the limit"

$Check_4 =$ "Good. Slenderness ratio within the limit"

Axial Capacity of Pile Section

Check slenderness of section in compression (AASHTO Sec. 6.9.4.2.1)

$\lambda_{rf} := 0.56 \cdot \sqrt{\frac{E}{F_y}}$ (Limiting slenderness ratio of flange) $\lambda_{rf} = 13.49$

$\lambda_{rw} := 1.49 \cdot \sqrt{\frac{E}{F_y}}$ (Limiting slenderness ratio of web) $\lambda_{rw} = 35.88$

$\lambda_f := \frac{\left(\frac{b}{2}\right)}{t_f}$ (Slenderness ratio of flange) $\lambda_f = 10.86$

$\lambda_w := \frac{h_w}{t_w}$ (slenderness ratio of web) $\lambda_w = 18.7$

$Slenderness :=$ if $\lambda_f < \lambda_{rf} \wedge \lambda_w < \lambda_{rw}$ "Non-slender section. Local buckling effects can be neglected" else "Slender section. Local buckling effects needs to be considered"

$Slenderness =$ "Non-slender section. Local buckling effects can be neglected"

Elastic critical buckling resistance based on flexural buckling (AASHTO Sec. 6.9.4.1.2)

$P_{ef} := \frac{\pi^2 \cdot E}{(\lambda)^2} \cdot A_s$ $P_{ef} = 10842\ kip$

Elastic critical buckling resistance based on torsional buckling (AASHTO Sec. 6.9.4.1.3)

$J_s := \frac{2 \cdot b \cdot t_f^3 + (d - t_f) \cdot t_w^3}{3}$ (St. Venant Constant) $J_s = 4.5\ in^4$

$C_w := \frac{I_y \cdot d^2}{4}$ (Warping torsional constant, AASHTO C6.9.4.1.3) $C_w = 18121\ in^6$

$KL := K_e \cdot L_b$ (Effective length for torsional buckling) $KL = 8.19\ ft$

$G' := 0.385 \cdot E$ (Shear modulus, AASHTO Sec. 6.9.4.1.3) $G' = 11165\ ksi$

$P_{eft} := \left(\frac{\pi^2 \cdot E \cdot C_w}{(KL)^2} + G' \cdot J_s \right) \cdot \frac{A_s}{I_y + I_z}$ $P_{eft} = 12190\ kip$

$P_e := min(P_{ef}, P_{eft})$ (Controlling Pe) $P_e = 10842\ kip$

Nominal Yield resistance (AASHTO Sec 6.9.4.1.1)

$P_o := F_y \cdot A_s$ $P_o = 1437\ kip$

Nominal Compressive resistance (AASHTO Sec. 6.9.4.1.1)

$$P_n := \begin{cases} \left(0.658^{\left(\frac{P_o}{P_e}\right)}\right) \cdot P_o & \text{if } \frac{P_o}{P_e} \le 2.25 \\ 0.877 \cdot P_e & \text{else} \end{cases}$$

$P_n = 1359\ kip$

$\phi_c := 0.6$ (Resistance factor for pile in compression, AASHTO 6.5.4.2)

$P_r := \phi_c \cdot P_n = 815.68\ kip$ (Factored axial capacity of pile in compression)

Demand Capacity ratio for Axial Strength of Pile:

$DC_a := \frac{P_u}{P_r}$ $DC_a = 0.21$

$$Check_7 := \begin{cases} \text{“Good. Axial capacity of the section is sufficient”} & \text{if } DC_a < 1 \\ \text{“Good. Axial capacity of the section is not sufficient”} & \text{else} \end{cases}$$

$Check_7 =$ "Good. Axial capacity of the section is sufficient"

Shear Capacity of Pile (AASHTO 6.10.9.2)

$V_p := 0.58 \cdot F_y \cdot h_w \cdot t_w$ $\qquad V_p = 251\ kip$

$K' := 5$

$$C' := \begin{cases} 1.0 & \text{if } \dfrac{h_w}{t_w} \le 1.12 \cdot \sqrt{\dfrac{E \cdot K'}{F_y}} \\ \dfrac{1.12}{\left(\dfrac{h_w}{t_w}\right)} \cdot \sqrt{\dfrac{E \cdot K'}{F_y}} & \text{also if } 1.12 \cdot \sqrt{\dfrac{E \cdot K'}{F_y}} < \dfrac{h_w}{t_w} \le 1.40 \cdot \sqrt{\dfrac{E \cdot K'}{F_y}} \\ \dfrac{1.57}{\left(\dfrac{h_w}{t_w}\right)^2} \cdot \left(\dfrac{E \cdot K'}{F_y}\right) & \text{else} \end{cases}$$

$C' = 1$

Nominal shear capacity:

$V_n := C' \cdot V_p$ $\qquad V_n = 251\ kip$

$\phi_v := 1.0$ (Resistance factor for shear, AASHTO Sec. 6.5.4.2)

$V_r := \phi_v \cdot V_n$ $\qquad V_r = 251\ kip$

Demand Capacity ratio for Shear Strength of Pile:

$DC_v := \dfrac{V_u}{V_r}$ $\qquad DC_v = 0.52$

$$Check_8 := \begin{cases} \text{"Good. Shear capacity of the section is sufficient"} & \text{if } DC_v < 1 \\ \text{"Not Good. Shear capacity of the section isn't sufficient"} & \text{else} \end{cases}$$

$Check_8 =$ "Good. Shear capacity of the section is sufficient"

PILE STRUCTURAL DESIGN
BEGIN ABUTMENT

SECOND SEGMENT (SECOND ANALYSIS)

Second Segment - Second Analysis
(Pinned Pile Head Condition)

References:

1. AASHTO LRFD Bridge Design Specifications, 19th Edition, 2020
2. NYSDOT LRFD Bridge Design Specifications - 2021
3. NYSDOT Geotechnical Design Manual
4. NYSDOT Bridge Manual - 2021
5. VTrans, Integral Abutment Bridge Design Guidelines

H Pile Section: ***HP14X117***

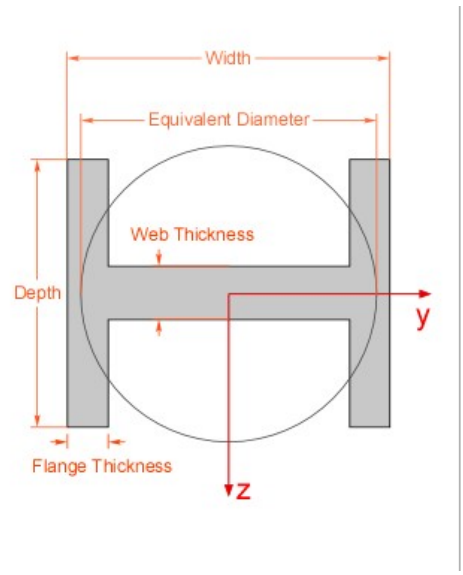

$b_s := 14.2 \cdot in$ (Width)

$d_s := 14.9 \cdot in$ (Depth)

$t_{fs} := 0.805 \cdot in$ (Flange thickness)

$t_{ws} := 0.805 \cdot in$ (Web thickness)

$E := 29000\ ksi$ (Steel Modulus of Elasticity)

$F_y := 50\ ksi$ (Yield Strength of Pile)

Subtract 1/16" all around these dimensions to account for corrosion.

$b'_s := b_s - 2 \cdot \left(\frac{1}{16}\right) \cdot in$ $\quad b'_s = 14.08\ in$

$d'_s := d_s - 2 \cdot \left(\frac{1}{16}\right) \cdot in$ $\quad d'_s = 14.78\ in$

$t'_{fs} := t_{fs} - 2 \cdot \left(\frac{1}{16}\right) \cdot in$ $\quad t'_{fs} = 0.68\ in$

$t'_{ws} := t_{ws} - 2 \cdot \left(\frac{1}{16}\right) \cdot in$ $\quad t'_{ws} = 0.68\ in$

$L_b := 18.6 \cdot ft$ (Unbraced length for second segment (Distance between first point and second point of zero moment, from LPILE Analysis)

$K_e := 1.0$ (Effective length factor, AASHTO Table C4.6.2.5-1)

Pile Applied loads

$P_{vertical} := 150.29\ kip$ (Pile vertical load due to superstructure loads (From GROUP))

$P_{earth_pressure} := 25\ kip$ (Additional pile load due to earth pressure, See Additional Load calculations)

$P_u := P_{vertical} + P_{earth_pressure} = 175.29\ kip$ (Factored Axial load on a single pile (From GROUP))

$M_{uy} := 0\ kip \cdot ft$ (Factored applied moment about pile weak axis) (From LPILE))

$M_{uz} := 3620\ kip \cdot in = 301.67\ kip \cdot ft$ (Factored applied moment about pile strong axis) (From LPILE))

$V_u := 130.7\ kip$ (Factored maximum applied shear in pile (From LPILE))

Section Properties:

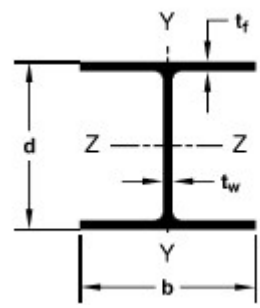

$b := d'_s$ (Width of flange)

$d := b'_s$ (Depth of section) $d = 14.08\ in$

$t_f := t'_{fs}$ (Thickness of flange) $t_f = 0.68\ in$

$t_w := t'_{ws}$ (Thickness of web) $t_w = 0.68\ in$

$h_w := d - 2 \cdot t_f$ (Height of web) $h_w = 12.72\ in$

$A_s := 2 \cdot t_f \cdot b + t_w \cdot h_w$ (Area of section) $A_s = 28.74\ in^2$

$I_y := \frac{t_f \cdot b^3}{6} + \frac{h_w \cdot t_w^3}{12}$ (Moment of inertia about y axis) $I_y = 365.88\ in^4$

$S_y := \frac{I_y}{\left(\frac{b}{2}\right)}$ (Elastic Section modulus about y axis) $S_y = 49.53\ in^3$

$Z_y := \frac{t_f \cdot b^2}{2} + \frac{h_w \cdot t_w^2}{4}$ (Plastic section modulus about y axis) $Z_y = 75.69\ in^3$

$r_y := \sqrt{\frac{I_y}{A_s}}$ (Radius of gyration about y axis) $r_y = 3.57\ in$

$I_z := \frac{b \cdot d^3}{12} - \frac{(b - t_w) \cdot h_w^3}{12}$ (Moment of inertia about z axis) $I_z = 1018.61\ in^4$

$S_z := \frac{I_z}{\left(\frac{d}{2}\right)}$ (Elastic section modulus about z axis) $S_z = 144.74\ in^3$

$Z_z := \frac{b \cdot d^2}{4} - \frac{(b - t_w) \cdot h_w^2}{4}$ (Plastic section modulus about z axis) $Z_z = 162.06\ in^3$

$r_z := \sqrt{\frac{I_z}{A_s}}$ (Radius of gyration about z axis) $r_z = 5.95\ in$

$\lambda := \frac{K_e \cdot L_b}{min(r_z, r_y)}$ (slenderness ratio of pile section) $\lambda = 63$

$\lambda_{limit} := 120$ (Limiting slenderness ratio, AASHTO Sec. 6.9.3)

```
Check4 := | if λ < λlimit
          |   "Good. Slenderness ratio within the limit"
          | else
          |   "Not Good. Slenderness ratio outside the limit"
```

$Check_4 =$ "Good. Slenderness ratio within the limit"

Axial Capacity of Pile Section

Check slenderness of section in compression (AASHTO Sec. 6.9.4.2.1)

$\lambda_{rf} := 0.56 \cdot \sqrt{\frac{E}{F_y}}$ (Limiting slenderness ratio of flange) $\lambda_{rf} = 13.49$

$\lambda_{rw} := 1.49 \cdot \sqrt{\frac{E}{F_y}}$ (Limiting slenderness ratio of web) $\lambda_{rw} = 35.88$

$\lambda_f := \frac{\left(\frac{b}{2}\right)}{t_f}$ (Slenderness ratio of flange) $\lambda_f = 10.86$

$\lambda_w := \frac{h_w}{t_w}$ (slenderness ratio of web) $\lambda_w = 18.7$

```
Slenderness := | if λf < λrf ∧ λw < λrw
               |   "Non-slender section. Local buckling effects can be neglected"
               | else
               |   "Slender section. Local buckling effects needs to be considered"
```

$Slenderness =$ "Non-slender section. Local buckling effects can be neglected"

Elastic critical buckling resistance based on flexural buckling (AASHTO Sec. 6.9.4.1.2)

$P_{ef} := \frac{\pi^2 \cdot E}{(\lambda)^2} \cdot A_s$ $P_{ef} = 2102\ kip$

Elastic critical buckling resistance based on torsional buckling (AASHTO Sec. 6.9.4.1.3)

$J_s := \frac{2 \cdot b \cdot t_f^3 + (d - t_f) \cdot t_w^3}{3}$ (St. Venant Constant) $J_s = 4.5\ in^4$

$C_w := \frac{I_y \cdot d^2}{4}$ (Warping torsional constant, AASHTO C6.9.4.1.3) $C_w = 18121\ in^6$

$KL := K_e \cdot L_b$ (Effective length for torsional buckling) $KL = 18.6\ ft$

$G' := 0.385 \cdot E$ (Shear modulus, AASHTO Sec. 6.9.4.1.3) $G' = 11165\ ksi$

$P_{eft} := \left(\frac{\pi^2 \cdot E \cdot C_w}{(KL)^2} + G' \cdot J_s \right) \cdot \frac{A_s}{I_y + I_z}$ $P_{eft} = 3204\ kip$

$P_e := min(P_{ef}, P_{eft})$ (Controlling Pe) $P_e = 2102\ kip$

Nominal Yield resistance (AASHTO Sec 6.9.4.1.1)

$P_o := F_y \cdot A_s$ $P_o = 1437\ kip$

Nominal Compressive resistance (AASHTO Sec. 6.9.4.1.1)

$$P_n := \begin{cases} \left(0.658^{\left(\frac{P_o}{P_e}\right)}\right) \cdot P_o & \text{if } \frac{P_o}{P_e} \le 2.25 \\ 0.877 \cdot P_e & \text{else} \end{cases}$$

$P_n = 1079\ kip$

$\phi_c := 0.6$ (Resistance factor for pile in compression, AASHTO 6.5.4.2)

$P_r := \phi_c \cdot P_n = 647.66\ kip$ (Factored axial capacity of pile in compression)

Flexural Capacity of Pile about strong axis (AASHTO 6.10.8)

The flexural capacity of the pile about the strong axis is the minimum of capacities obtained by the following three criteria

1. Compression flange local buckling
2. Compression flange lateral torsional buckling
3. Tension flange Yielding

1. Compression flange local buckling (AASHTO 6.10.8.2.2)

$\lambda_f = 10.86$

$F_{yr} := 0.7 \cdot F_y$ $\qquad F_{yr} = 35\ ksi$

$\lambda_{pf} := 0.38 \cdot \sqrt{\frac{E}{F_y}}$ $\qquad \lambda_{pf} = 9.15$

$\lambda_{rf} := 0.56 \cdot \sqrt{\frac{E}{F_{yr}}} = 16.12$

$R_b := 1$ (Web load shedding factor, taken as 1.0)

$R_h := 1$ (Hybrid factor, taken as 1.0)

$$F_{nc_1} := \begin{cases} R_b \cdot R_h \cdot F_y & \text{if } \lambda_f \le \lambda_{pf} \\ \left(1 - \left(1 - \frac{F_{yr}}{R_h \cdot F_y}\right) \cdot \left(\frac{\lambda_f - \lambda_{pf}}{\lambda_{rf} - \lambda_{pf}}\right)\right) \cdot R_b \cdot R_h \cdot F_y & \text{else} \end{cases}$$

$F_{nc_1} = 46\ ksi$

2. <u>Compression flange lateral-torsional buckling (AASHTO 6.10.8.2.3)</u>

To find the depth of web in compression Dc, calculate the total compressive and tensile stresses due to axial load and bending.

$f_c := \frac{P_u}{A_s} + \frac{M_{uz}}{S_z}$ $\qquad f_c = 31.11\ ksi$

$f_t := -\left(\frac{P_u}{A_s}\right) + \frac{M_{uz}}{S_z}$ $\qquad f_t = 18.91\ ksi$

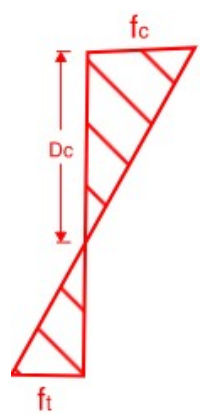

$$D_c := \begin{cases} h_w & \text{if } f_t < 0 \\ \frac{f_c}{f_c + f_t} \cdot d - t_f & \text{else} \end{cases}$$

$D_c = 8.07\ in$

$r_t := \frac{b}{\sqrt{12 \cdot \left(1 + \frac{1}{3} \cdot \frac{D_c \cdot t_w}{b \cdot t_f}\right)}}$ (Effective radius of gyration for lateral-torsional buckling) $\qquad r_t = 3.92\ in$

$C_b := 1.0$ (Moment gradient modifier, taken as 1.0 for simplicity)

$$F_{cr} := \frac{C_b \cdot R_b \cdot \pi^2 \cdot E}{\left(\frac{L_b}{r_t}\right)^2}$$ (Elastic lateral-torsional buckling stress) $F_{cr} = 88\ ksi$

$$L_p := r_t \cdot \sqrt{\frac{E}{F_y}}$$ $L_p = 94\ in$

$$L_r := \pi \cdot r_t \cdot \sqrt{\frac{E}{F_{yr}}}$$ $L_r = 355\ in$

$$F_{nc_2} := \begin{cases} R_b \cdot R_h \cdot F_y & \text{if } L_b \le L_p \\ min\left(C_b \cdot \left(1 - \left(1 - \frac{F_{yr}}{R_h \cdot F_y}\right) \cdot \left(\frac{L_b - L_p}{L_r - L_p}\right)\right) \cdot R_b \cdot R_h \cdot F_y, R_b \cdot R_h \cdot F_y\right) & \text{also if } L_p < L_b \le L_r \\ min\left(F_{cr}, R_b \cdot R_h \cdot F_y\right) & \text{else} \end{cases}$$ $F_{nc_2} = 43\ ksi$

3. Tension flange Yielding (AASHTO 6.10.8.3)

$$F_{nt} := R_h \cdot F_y$$ $F_{nt} = 50\ ksi$

Nominal moment capacity of the pile section about strong axis:

$$M_{nz} := S_z \cdot min\left(F_{nc_1}, F_{nc_2}, F_{nt}\right)$$ $M_{nz} = 514\ kip \cdot ft$

Flexural Capacity of Pile about weak axis (AASHTO 6.12.2.2-1)

$$\lambda_{rf} := 0.83 \cdot \sqrt{\frac{E}{F_y}} = 19.99 \qquad \lambda_{pf} = 9.15$$

$$M_{ny} := \begin{cases} F_y \cdot Z_y & \text{if } \lambda_f \le \lambda_{pf} \\ \left(1 - \left(1 - \frac{S_y}{Z_y}\right) \cdot \left(\frac{\lambda_f - \lambda_{pf}}{0.45 \cdot \sqrt{\frac{E}{F_y}}}\right)\right) \cdot F_y \cdot Z_y & \text{else if } \lambda_{pf} < \lambda_f \le \lambda_{rf} \end{cases} = 298.16\ kip \cdot ft$$

Shear Capacity of Pile (AASHTO 6.10.9.2)

$V_p := 0.58 \cdot F_y \cdot h_w \cdot t_w$ $\qquad V_p = 251\ kip$

$K' := 5$

$$C' := \begin{cases} 1.0 & \text{if } \dfrac{h_w}{t_w} \le 1.12 \cdot \sqrt{\dfrac{E \cdot K'}{F_y}} \\ \dfrac{1.12}{\left(\dfrac{h_w}{t_w}\right)} \cdot \sqrt{\dfrac{E \cdot K'}{F_y}} & \text{also if } 1.12 \cdot \sqrt{\dfrac{E \cdot K'}{F_y}} < \dfrac{h_w}{t_w} \le 1.40 \cdot \sqrt{\dfrac{E \cdot K'}{F_y}} \\ \dfrac{1.57}{\left(\dfrac{h_w}{t_w}\right)^2} \cdot \left(\dfrac{E \cdot K'}{F_y}\right) & \text{else} \end{cases}$$

$C' = 1$

Nominal shear capacity:

$V_n := C' \cdot V_p$ $\qquad V_n = 251\ kip$

$\phi_v := 1.0$ (Resistance factor for shear, AASHTO Sec. 6.5.4.2)

$V_r := \phi_v \cdot V_n$ $\qquad V_r = 251\ kip$

Demand Capacity ratio for Shear Strength of Pile:

$DC_v := \dfrac{V_u}{V_r}$ $\qquad DC_v = 0.52$

$$Check_7 := \begin{cases} \text{“Good. Shear capacity of the section is sufficient”} & \text{if } DC_v < 1 \\ \text{“Not Good. Shear capacity of the section isn't sufficient”} & \text{else} \end{cases}$$

$Check_7 =$ “Good. Shear capacity of the section is sufficient”

Interaction with flexural Shear: (AASHTO 6.9.2.2)

$\dfrac{P_u}{P_r} = 0.27$

$$Shear_{Interaction} := \begin{cases} \text{if } \dfrac{P_u}{P_r} > 0.05 \\ \quad \text{"Interaction with flexural shear needs to be considered"} \\ \text{else} \\ \quad \text{"Interaction with flexural shear does not need to be considered"} \end{cases}$$

$Shear_{Interaction} =$ "Interaction with flexural shear needs to be considered"

Per AASHTO 6.9.2.2.2, for I-Section members, the cross section shear stresses due to torque shall be neglected and value of Δz shall be taken equal to 1.0 in all cases and only flexural shear stresses in the web shall be considered in the calculation of Δ.

$\Delta'_z := 1.0$

Maximum Shear stress in web:

$$Q := (b \cdot t_f) \cdot \left(\frac{h_w}{2} + \frac{t_f}{2}\right) + \left(\frac{h_w}{2} \cdot t_w\right) \cdot \left(\frac{h_w}{4}\right)$$ (Moment of area about N/A)

$$f_{ve} := \frac{V_u \cdot Q}{I_z \cdot t_w}$$ $f_{ve} = 15.29\ ksi$

Nominal Shear resistance of web: (AASHTO 6.11.8.2)

$k_s := 5.34$ (Plate-buckling coefficient for shear stress)

$\lambda_w = 18.7$ (Slenderness ratio of web)

$$F_{cv} := \begin{cases} \text{if } \lambda_w \le 1.12 \cdot \sqrt{\dfrac{E \cdot k_s}{F_y}} \\ \quad 0.58 \cdot F_y \\ \text{also if } 1.12 \cdot \sqrt{\dfrac{E \cdot k_s}{F_y}} < \lambda_w \le 1.40 \cdot \sqrt{\dfrac{E \cdot k_s}{F_y}} \\ \quad \dfrac{0.65 \cdot \sqrt{F_y \cdot E \cdot k_s}}{\lambda_w} \\ \text{also if } \lambda_w > 1.40 \cdot \sqrt{\dfrac{E \cdot k_s}{F_y}} \\ \quad \dfrac{0.9 \cdot E \cdot k_s}{\lambda_w^{\,2}} \\ \text{else} \\ \quad \text{"ERROR"} \end{cases}$$ $F_{cv} = 29\ ksi$

$\phi_T := 1.0$ (Resistance factor for torsion, AASHTO 6.5.4.2)

$$\Delta := \begin{cases} \max\left(1-\left(\dfrac{f_{ve}}{\phi_T \cdot F_{cv}}\right)^2, 0\right) & \text{if } \dfrac{P_u}{P_r} > 0.05 \\ 1.0 & \text{else} \end{cases}$$

(Axial resistance modifier, AASHTO Eq. 6.9.2.2.2-1) $\Delta = 0.72$

Combined Axial and Flexure (AASHTO 6.9.2.2.1)

The resistance factors for combined axial resistance and flexure resistance (AASHTO 6.5.4.2)

$\phi_f := 1.0$

$\phi_a := 0.7$

$M_{ry} := \phi_f \cdot M_{ny} = 298.16\ kip \cdot ft$

$M_{rz} := \phi_f \cdot M_{nz} = 513.6\ kip \cdot ft$

$P_r := \phi_a \cdot P_n$ $\qquad P_r = 756\ kip$

Check compactness of section (AASHTO A6.2.1 and A6.3.2)

Check for compactness ensures that the section is able to develop the full plastic moment.

$D_{cp} := \dfrac{h_w}{2} = 6.36\ in$ (Depth of web in compression at the plastic moment)

$M_y := F_y \cdot S_z = 603.1\ kip \cdot ft$ (Yield moment)

$Y' := \dfrac{h_w}{2} = 6.36\ in$ (Depth of plastic neutral axis, Table D6.1.1)

$M_p := F_y \cdot Z_z = 675.3\ kip \cdot ft$ (Plastic Moment)

$$a_{wc} := \frac{2 \cdot D_c \cdot t_w}{b \cdot t_f} = 1.09$$

$$\lambda_{rw} := min\left(\max\left(4.6 \cdot \sqrt{\frac{E}{F_y}}, \left(3.1 + \frac{5}{a_{wc}}\right) \cdot \sqrt{\frac{E}{F_y}}\right), 5.7 \cdot \sqrt{\frac{E}{F_y}}\right) = 137.27$$ (Equation A6.2.1-3)

Limiting Slenderness ratio for compact web:

$$\lambda_{pw_Dcp} := min\left(\left(\frac{\sqrt{\frac{E}{F_y}}}{0.54 \cdot \frac{M_p}{R_h \cdot M_y} - 0.09}\right), \lambda_{rw} \cdot \frac{D_{cp}}{D_c}\right) = 46.8$$ (Equation A6.2.1-2)

$$Compact_{web} := \begin{cases} \text{“Compact Web”} & \text{if } \dfrac{2 \cdot D_c}{t_w} < \lambda_{pw_Dcp} \\ \text{“Non Compact Web”} & \text{else} \end{cases} = \text{“Compact Web”}$$

$$Compact_{flange} := \left\| \begin{array}{l} \text{if } \lambda_f < 0.38 \cdot \sqrt{\dfrac{E}{F_y}} \\ \quad \text{"Compact Flange"} \\ \text{else} \\ \quad \text{"Non Compact Flange"} \end{array} \right. = \text{"Non Compact Flange"}$$

$$Compact_{Section} := \left\| \begin{array}{l} \text{if } Compact_{web} = \text{"Compact Web"} \wedge Compact_{flange} = \text{"Compact Flange"} \\ \quad \text{"Compact Section"} \\ \text{else} \\ \quad \text{"Non Compact Section"} \end{array} \right. = \text{"Non Compact Section"}$$

Interaction between axial load and bending moment in pile:

$$Interaction_ratio := \left\| \begin{array}{l} \text{if } Compact_{Section} = \text{"Compact Section"} \\ \quad \left\| \begin{array}{l} \text{if } \dfrac{P_u}{P_r} < 0.2 \\ \quad \left\| \left(\dfrac{P_u}{2 \cdot \Delta \cdot P_r}\right) + \dfrac{M_{uy}}{\Delta'_z \cdot M_{ry}} + \dfrac{M_{uz}}{\Delta'_z \cdot M_{rz}} \right. \\ \text{else} \\ \quad \left\| \left(\dfrac{P_u}{\Delta \cdot P_r}\right) + \dfrac{8}{9} \cdot \left(\dfrac{M_{uy}}{\Delta'_z \cdot M_{ry}} + \dfrac{M_{uz}}{\Delta'_z \cdot M_{rz}}\right) \right. \end{array} \right. \\ \text{else} \\ \quad \left\| \left(\dfrac{P_u}{\Delta \cdot P_r} + \dfrac{M_{uy}}{\Delta'_z \cdot M_{ry}} + \dfrac{M_{uz}}{\Delta'_z \cdot M_{rz}}\right) \right. \end{array} \right. = 0.9087$$

(AASHTO Section. 6.9.2.2.1)

$$Interaction := \left\| \begin{array}{l} \text{if } Interaction_ratio < 1.0 \\ \quad \text{"Okay"} \\ \text{else} \\ \quad \text{"Not Okay"} \end{array} \right. = \text{"Okay"}$$

PILE STRUCTURAL DESIGN
BEGIN ABUTMENT

LOWER ZONE

Lower Zone

References:

1. AASHTO LRFD Bridge Design Specifications, 19th Edition, 2020
2. NYSDOT LRFD Bridge Design Specifications - 2021
3. NYSDOT Geotechnical Design Manual
4. NYSDOT Bridge Manual - 2021
5. VTrans, Integral Abutment Bridge Design Guidelines

H Pile Section: ***HP14X117***

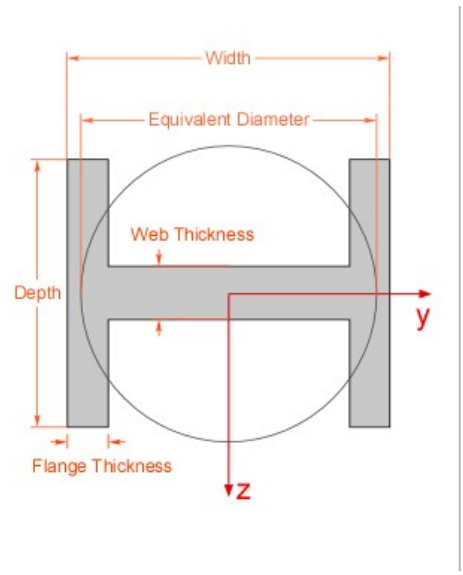

$b_s := 14.2 \cdot in$ (Width)

$d_s := 14.9 \cdot in$ (Depth)

$t_{fs} := 0.805 \cdot in$ (Flange thickness)

$t_{ws} := 0.805 \cdot in$ (Web thickness)

$E := 29000\ ksi$ (Steel Modulus of Elasticity)

$F_y := 50\ ksi$ (Yield Strength of Pile)

Subtract 1/16" all around these dimensions to account for corrosion.

$b'_s := b_s - 2 \cdot \left(\frac{1}{16}\right) \cdot in$ $\quad b'_s = 14.08\ in$

$d'_s := d_s - 2 \cdot \left(\frac{1}{16}\right) \cdot in$ $\quad d'_s = 14.78\ in$

$t'_{fs} := t_{fs} - 2 \cdot \left(\frac{1}{16}\right) \cdot in$ $\quad t'_{fs} = 0.68\ in$

$t'_{ws} := t_{ws} - 2 \cdot \left(\frac{1}{16}\right) \cdot in$ $\quad t'_{ws} = 0.68\ in$

$L_b := 5 \cdot ft$ (Unbraced length for lower zone
(This is zero, inputting 5ft for calculation purpose (Conservative)

$K_e := 1.0$ (Effective length factor, AASHTO Table C4.6.2.5-1)

Pile Applied loads

$P_{vertical} := 150.29\ kip$ (Pile vertical load due to superstructure loads (From GROUP))

$P_{earth_pressure} := 25\ kip$ (Additional pile load due to earth pressure, See Additional Load calculations)

$P_u := P_{vertical} + P_{earth_pressure} = 175.29\ kip$ (Factored Axial load on a single pile (From GROUP))

Section Properties:

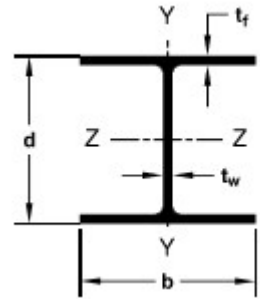

$b := d'_s$ (Width of flange)

$d := b'_s$ (Depth of section) $d = 14.08\ in$

$t_f := t'_{fs}$ (Thickness of flange) $t_f = 0.68\ in$

$t_w := t'_{ws}$ (Thickness of web) $t_w = 0.68\ in$

$h_w := d - 2 \cdot t_f$ (Height of web) $h_w = 12.72\ in$

$A_s := 2 \cdot t_f \cdot b + t_w \cdot h_w$ (Area of section) $A_s = 28.74\ in^2$

$I_y := \frac{t_f \cdot b^3}{6} + \frac{h_w \cdot t_w^3}{12}$ (Moment of inertia about y axis) $I_y = 365.88\ in^4$

$S_y := \frac{I_y}{\left(\frac{b}{2}\right)}$ (Elastic Section modulus about y axis) $S_y = 49.53\ in^3$

$Z_y := \frac{t_f \cdot b^2}{2} + \frac{h_w \cdot t_w^2}{4}$ (Plastic section modulus about y axis) $Z_y = 75.69\ in^3$

$r_y := \sqrt{\frac{I_y}{A_s}}$ (Radius of gyration about y axis) $r_y = 3.57\ in$

$I_z := \frac{b \cdot d^3}{12} - \frac{(b - t_w) \cdot h_w^3}{12}$ (Moment of inertia about z axis) $I_z = 1018.61\ in^4$

$S_z := \frac{I_z}{\left(\frac{d}{2}\right)}$ (Elastic section modulus about z axis) $S_z = 144.74\ in^3$

$Z_z := \frac{b \cdot d^2}{4} - \frac{(b - t_w) \cdot h_w^2}{4}$ (Plastic section modulus about z axis) $Z_z = 162.06\ in^3$

$r_z := \sqrt{\frac{I_z}{A_s}}$ (Radius of gyration about z axis) $r_z = 5.95\ in$

$\lambda := \frac{K_e \cdot L_b}{min(r_z, r_y)}$ (slenderness ratio of pile section) $\lambda = 17$

$\lambda_{limit} := 120$ (Limiting slenderness ratio, AASHTO Sec. 6.9.3)

```
Check4 := | if λ < λlimit
          |   | "Good. Slenderness ratio within the limit"
          | else
          |   | "Not Good. Slenderness ratio outside the limit"
```

$Check_4 =$ "Good. Slenderness ratio within the limit"

Axial Capacity of Pile Section

Check slenderness of section in compression (AASHTO Sec. 6.9.4.2.1)

$\lambda_{rf} := 0.56 \cdot \sqrt{\frac{E}{F_y}}$ (Limiting slenderness ratio of flange) $\lambda_{rf} = 13.49$

$\lambda_{rw} := 1.49 \cdot \sqrt{\frac{E}{F_y}}$ (Limiting slenderness ratio of web) $\lambda_{rw} = 35.88$

$\lambda_f := \frac{\left(\frac{b}{2}\right)}{t_f}$ (Slenderness ratio of flange) $\lambda_f = 10.86$

$\lambda_w := \frac{h_w}{t_w}$ (slenderness ratio of web) $\lambda_w = 18.7$

```
Slenderness := | if λf < λrf ∧ λw < λrw
               |   | "Non-slender section. Local buckling effects can be neglected"
               | else
               |   | "Slender section. Local buckling effects needs to be considered"
```

$Slenderness =$ "Non-slender section. Local buckling effects can be neglected"

Elastic critical buckling resistance based on flexural buckling (AASHTO Sec. 6.9.4.1.2)

$P_{ef} := \frac{\pi^2 \cdot E}{(\lambda)^2} \cdot A_s$ $P_{ef} = 29089\ kip$

Elastic critical buckling resistance based on torsional buckling (AASHTO Sec. 6.9.4.1.3)

$J_s := \frac{2 \cdot b \cdot t_f^3 + (d - t_f) \cdot t_w^3}{3}$ (St. Venant Constant) $J_s = 4.5\ in^4$

$C_w := \frac{I_y \cdot d^2}{4}$ (Warping torsional constant, AASHTO C6.9.4.1.3) $C_w = 18121\ in^6$

$KL := K_e \cdot L_b$ (Effective length for torsional buckling) $KL = 5\ ft$

$G' := 0.385 \cdot E$ (Shear modulus, AASHTO Sec. 6.9.4.1.3) $G' = 11165\ ksi$

$P_{eft} := \left(\frac{\pi^2 \cdot E \cdot C_w}{(KL)^2} + G' \cdot J_s\right) \cdot \frac{A_s}{I_y + I_z}$ $P_{eft} = 30950\ kip$

$P_e := min(P_{ef}, P_{eft})$ (Controlling Pe) $P_e = 29089\ kip$

Nominal Yield resistance (AASHTO Sec 6.9.4.1.1)

$P_o := F_y \cdot A_s$ $P_o = 1437\ kip$

Nominal Compressive resistance (AASHTO Sec. 6.9.4.1.1)

$$P_n := \begin{cases} \left(0.658^{\left(\frac{P_o}{P_e}\right)}\right) \cdot P_o & \text{if } \frac{P_o}{P_e} \le 2.25 \\ 0.877 \cdot P_e & \text{else} \end{cases}$$

$P_n = 1408\ kip$

$\phi_c := 0.5$ (Resistance factor for pile in compression where pile damage is likely for lower zone, AASHTO 6.5.4.2)

$P_r := \phi_c \cdot P_n = 703.8\ kip$ (Factored axial capacity of pile in compression)

Demand Capacity ratio for Axial Strength of Pile:

$DC_a := \frac{P_u}{P_r}$ $DC_a = 0.25$

$$Check_7 := \begin{cases} \text{"Good. Axial capacity of the section is sufficient"} & \text{if } DC_a < 1 \\ \text{"Good. Axial capacity of the section is not sufficient"} & \text{else} \end{cases}$$

$Check_7 =$ "Good. Axial capacity of the section is sufficient"

PILE STRUCTURAL DESIGN
BEGIN ABUTMENT

DUCTILITY

Pile Ductility Check

Because of large pile section, the ductility check of the pile is performed as per NYSDOT GDM 11.9.2.7.11 to verify it's ability to accommodate thermal movement of the integral abutment.

$F_y := 50\ ksi$ (Yield Strength of Pile)

$E := 29000\ ksi$ (Modulus of Elasticity of Steel)

$b := 14.08\ in$ (Flange width of pile, after reduction for corrosion)

$t_f := 0.68\ in$ (Flange thickness of pile, after reduction for corrosion)

$M_p := 454.9\ kip \cdot ft$ (Plastic moment of pile in the direction of thermal movement, see Pile design calculations for First Analysis, First Segment)

$\Delta' := 1.28\ in$ (Factored thermal movement, See Foundation Loads)

$L' := 2 \cdot (7.44 \cdot ft)$ (Twice the length from the bottom of abutment to the first point of zero moment in the pile, from GROUP)

$\theta_w := 0.01292\ rad$ (Max. range of factored angle of rotation of superstructure at abutment, See Foundation Loads)

$I := 1018.61\ in^4$ (Moment of inertia of pile in the direction of thermal movement, considering section loss due to corrosion)

For Steel H-Piles:

$$2\left[\frac{\Delta}{L} - \frac{M_p L}{6EI}\right] + \theta_w \le \frac{3C_i M_p L}{4EI} \qquad C_i = \frac{19}{6} - 5.68\sqrt{\frac{f_y}{E}}\frac{b_f}{2t_f} \qquad 0 < C_i < 1.0$$

$$C_i := min\left(max\left(\frac{19}{6} - 5.68 \cdot \sqrt{\frac{F_y}{E}} \cdot \frac{b}{2 \cdot t_f}, 0\right), 1\right) = 0.72 \qquad C_i = 0.72$$

$$Left_term := 2 \cdot \left(\frac{\Delta'}{L'} - \frac{M_p \cdot L'}{6 \cdot E \cdot I}\right) + \theta_w = 0.0163$$

$$Right_term := \frac{3 \cdot C_i \cdot M_p \cdot L'}{4 \cdot E \cdot I} = 0.0179$$

$Ductility :=$ if $Left_term \le Right_term$ "The pile is sufficiently ductile" else "The pile isn't sufficiently ductile" = "The pile is sufficiently ductile"

PILE STRUCTURAL DESIGN
BEGIN ABUTMENT

EARTH PRESSURE LOAD

Additional Loads on Integral Abutment Pile

Earth pressure on the abutments of continuous spans will produce additional vertical loads on the piles. The purpose of this worksheet is to calculate the additional pile loads on integral abutment piles in addition to gravity loads. PennDOT Bridge Manual DM-4, Appendix G, Section 1.4.2.2. This approximate calculation assumes that the spans are separated and are simply supported at the center pier.

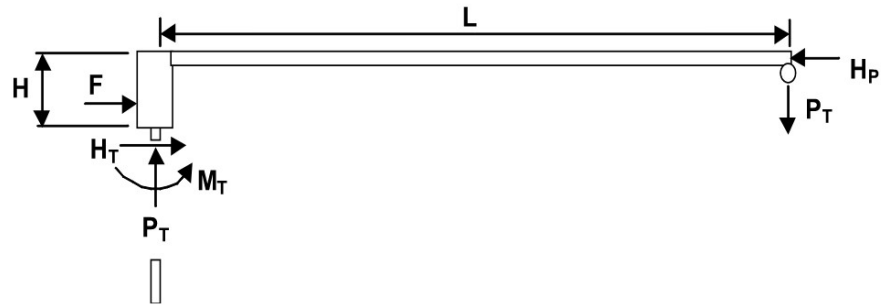

Figure C1.4.2.2-2 Pile Vertical Load Due to Earth Pressure on the Abutment

Earth pressure on the abutments of continuous spans will produce additional vertical loads on the piles. The value of the additional vertical load per pile may be approximately calculated using Figure C1.4.2.2-2 and Equation C1.4.2.2-1. This approximate calculation assumes that the end span is separated from the remaining of the bridge and that the end of the span at the first pier is simply supported.

$$P_T = \frac{\left(\frac{2FH}{3N}\right) + H_T H + M_T}{L} \qquad \text{(C1.4.2.2-1)}$$

Where:

P_T: The additional vertical load per pile due to earth pressure on the abutment (kips)
N: Number of piles in the abutment
F : Passive pressure force on the abutment (kips)
H: The height of the abutment (ft.)
H_T: The horizontal force on the pile, may be calculated as twice the plastic moment of the pile divided by the distance from the bottom of the abutment to the point of fixity of the piles (kips)
M_T: The moment at the top of the pile, may be conservatively taken as the plastic moment of the pile (kip-ft.)
L: Length of end span (ft.)

$\gamma_{backfill} := 130\ pcf$ (Unit weight of backfill soil)

$\varphi_{backfill} := 36\ deg$ (Friction angle of backfill soil)

$H_{abut} := 165.44\ ft - 155.33\ ft = 10.11\ ft$ (Height of abutment)

$L_{abut} := 56.5\ ft$ (Length of abutment)

$L_{span} := 114\ ft$ (Bridge span length)

$N_{piles} := 8$ (Number of piles in abutment)

$L_{fixity} := 45\ ft$ (Length of fixity of pile from bottom of abutment, from GROUP)

$M_p := 454.9\ kip \cdot ft$ (Plastic moment capacity of pile in strong axis, see Pile design calculations)

$H_T := \frac{2 \cdot M_p}{L_{fixity}} = 20.22\ kip$ (Horizontal force on top of pile)

$M_T := M_p = 454.9\ kip \cdot ft$ (Moment at the top of pile, conservatively taken as plastic moment capacity)

$K_p := \left(\tan\left(45\ deg + \frac{\varphi_{backfill}}{2}\right)\right)^2 = 3.85$ (Passive earth pressure coefficient)

$F := \left(\frac{1}{2} \cdot K_p \cdot \gamma_{backfill} \cdot H_{abut}^{\ 2}\right) \cdot L_{abut} = 1445.88\ kip$ (Passive earth pressure force on abutment)

Additional vertical load per pile due to earth pressure:

$$P_T := \frac{\left(\frac{2 \cdot F \cdot H_{abut}}{3 \cdot N_{piles}}\right) + H_T \cdot H_{abut} + M_T}{L_{span}} = 16.47\ kip$$

Factored additional vertical load (Strength) per pile:

$P_{T_STR} := (1.5) \cdot P_T = 25\ kip$

FIRST ANALYSIS (GROUP PROGRAM) INPUT
BEGIN ABUTMENT

```
==========================================================================

                 GROUP for Windows, Version 2019.11.10

                  Serial Number : 235486675

                  Analysis of A Group of Piles
               Subjected to Axial and Lateral Loading

                (c) Copyright ENSOFT, Inc., 1987-2018
                      All Rights Reserved

==========================================================================


This program is licensed to :

KC Engineering & Land Surveying
New York, NY, USA

Path to file locations      : P:\120179-NYSTA_D214866_TermBridge\Task_2\50
Design Documents\Geotech\Abutment_Foundation_Design\West_Abutment\GROUP\HP14X117 no
downdrag\
Name of input data file     : HP14x117_no_downdrag.gp11r
Name of output echo file    : HP14x117_no_downdrag.gp11e
Name of output results file : HP14x117_no_downdrag.gp11o
Name of output summary file : HP14x117_no_downdrag.gp11t
Name of plot output file    : HP14x117_no_downdrag.gp11p
Name of runtime file        : HP14x117_no_downdrag.gp11r


--------------------------------------------------------------------------
                     Time and Date of Analysis
--------------------------------------------------------------------------

          Date:  September 10, 2025     Time:  11:27:36





           *****     INPUT INFORMATION     *****


New Group


ANALYSIS TYPE = 3D ANALYSIS
```

```
ADJUST DEPTH FOR BATTER PILES

GENERATE LOAD-DISP (AND T-R) CURVES BASED ON SOIL PROFILE

EXTEND INTERPOLATION FOR L-DP (AND T-R) CURVES

UNITS SYSTEM  = ENGL



* TABLE B *  PILE CAP OPTIONS

LENGTH,YY    ( FT ) =    3.000
WIDTH, ZZ    ( FT ) =    56.50
THICKNESS,XX ( FT ) =    10.11

* PILE CAP DIMENSIONS ARE NOT CONSIDERED
  FOR THE PILE GROUP ANALYSIS




* TABLE C *  LOAD AND CONTROL PARAMETERS


** LOAD CASES **


NUMBER OF LOAD CASES :    1


LOAD CASE    :     1
CASE NAME    : Load Case

LOAD TYPE    : Dead, DL
SCALE FACTOR :       1.0000

* SPECIFIED DISPLACEMENTS/LOADS *

- DOF 1 ,      VERT. LOAD,KIP           1202.33
- DOF 2 ,      HOR.DISP Y, IN          -1.28000
- DOF 3 ,      HOR.LOAD Z,KIP           0.00000
- DOF 4 ,        MOMENT X,KIP-IN        0.00000
- DOF 5 ,        MOMENT Y,KIP-IN        0.00000
- DOF 6 ,      ROTATION Z,RAD        -0.0129200
- LOCATION       COORD. X, FT           0.00000
- LOCATION       COORD. Y, FT           0.00000
- LOCATION       COORD. Z, FT           0.00000
```

```
     * THE LOADING IS STATIC *


     * CONTROL PARAMETERS *
         TOLERANCE ON CONVERGENCE OF PILE CAP MOVEMENT        =  1.00000E-04
         TOLERANCE ON DETERMINATION OF PILE DEFLECTIONS       =  1.00000E-04 IN
         MAX NO OF ITERATIONS ALLOWED FOR FOUNDATION ANALYSIS =      100
         MAXIMUM NO OF ITERATIONS ALLOWED FOR PILE ANALYSIS   =      100
         FACTOR TO APPLY THE LOAD IN INCREMENTS               =   1.0000
         MINIMUM FACTOR FOR LOAD INCREMENTS                   =   1.0000
         PRINT RESULTS ONLY AT PILE CAP



     * TABLE D *   ARRANGEMENT OF PILE GROUPS

     GROUP  CONN.Z-Z   CONN.Y-Y   PILE PROP  P-Y CURVE  L-S CURVE  T-R CURVE  R-F-L
SET
       1       FIX        FIX         1          0          1 G        1 G        0
       2       FIX        FIX         1          0          1 G        1 G        0
       3       FIX        FIX         1          0          1 G        1 G        0
       4       FIX        FIX         1          0          1 G        1 G        0
       5       FIX        FIX         1          0          1 G        1 G        0
       6       FIX        FIX         1          0          1 G        1 G        0
       7       FIX        FIX         1          0          1 G        1 G        0
       8       FIX        FIX         1          0          1 G        1 G        0

     GROUP   CorX,FT    CorY,FT    CorZ,FT  ALPHA,DEG   BETA,DEG  THETA,DEG
GROUND,FT SPz,KIP-IN SPy,KIP-IN
       1       0.000      0.000     -15.75      0.000      90.00      0.000
-3.000      0.000      0.000
       2       0.000      0.000     -11.25      0.000      90.00      0.000
-3.000      0.000      0.000
       3       0.000      0.000     -6.750      0.000      90.00      0.000
-3.000      0.000      0.000
       4       0.000      0.000     -2.250      0.000      90.00      0.000
-3.000      0.000      0.000
       5       0.000      0.000      2.250      0.000      90.00      0.000
-3.000      0.000      0.000
       6       0.000      0.000      6.750      0.000      90.00      0.000
-3.000      0.000      0.000
       7       0.000      0.000      11.25      0.000      90.00      0.000
-3.000      0.000      0.000
       8       0.000      0.000      15.75      0.000      90.00      0.000
-3.000      0.000      0.000



     * TABLE E *   PILE GEOMETRY AND PROPERTIES
                   PILE TYPE = 1 - DRIVEN PILE
```

```
                          = 2 - DRILLED SHAFT

       PROP   SECTS   INC     PILE TYPE      LENGTH, FT
         1      1     100          1             76.000

     * PILE SECTIONS *

       PROP    SECT      FROM,FT         TO,FT    CROSS SECT
         1       1        0.00000        76.0000       1

     * PILE CROSS SECTIONS *

      CROSS SECTION       :     1
      SECTION NAME        : HP14X117
      TYPE                :  ELASTIC
      CROSS SECTION TYPE  : H SECTION
      EQUIVALENT DIAMETER :       14.2200 IN
      EXTERNAL WIDTH      :       14.0800 IN
      EXTERNAL DEPTH      :       14.7800 IN
      FLANGE THICKNESS    :       0.68000 IN
      WEB THICKNESS       :       0.68000 IN
      YOUNG MODULUS       :       29000.0 KIP/IN**2
      SHEAR MODULUS       :       11165.0 KIP/IN**2

     * PILE CROSS SECTIONS PROPERTIES *

              ELASTIC SECTIONS

    SECT         DIAM,IN     PERIM,IN   AREA,IN**2   Iz,IN**4    Iy,IN**4
GJ,KIP-IN**2   Mn,KIP-IN    Vn,KIP
      1           14.220       84.5200      28.750      1019.7      366.25
1.5474E+07      0.0000      0.0000



     * TABLE F *   SOIL DATA


     SOILS INFORMATION

         GROUND SURFACE          =     -3.00000  FT

         8 LAYER(S) OF SOIL

         LAYER  1
         THE SOIL IS A SAND
                                                        TOP OF LAYER    BOTTOM OF
LAYER
         X COORDINATE                          (FT)       -3.00000           0.00000
         EFFECTIVE UNIT WEIGHT         (KIP/FT**3)        0.13000           0.13000
```

```
        FRICTION ANGLE                  (DEGREES)        36.0000           36.0000
        P-Y SUBGRADE MODULUS          (KIP/IN**3)        0.22500           0.22500
        ULTIMATE UNIT SIDE FRICTION   (KIP/FT**2)    5.21060E-03 (P)       0.15908
(P)
        ULTIMATE UNIT TIP RESISTANCE  (KIP/FT**2)        0.00000           0.00000

        LAYER  2
        THE SOIL IS A SAND
                                                      TOP OF LAYER    BOTTOM OF
LAYER
        X COORDINATE                          (FT)        0.00000           8.00000
        EFFECTIVE UNIT WEIGHT         (KIP/FT**3)        0.11000           0.11000
        FRICTION ANGLE                  (DEGREES)        28.0000           28.0000
        P-Y SUBGRADE MODULUS          (KIP/IN**3)      0.0250000         0.0250000
        ULTIMATE UNIT SIDE FRICTION   (KIP/FT**2)        0.15908 (P)       0.51802
(P)
        ULTIMATE UNIT TIP RESISTANCE  (KIP/FT**2)        0.00000           0.00000

        LAYER  3
        THE SOIL IS A SAND
                                                      TOP OF LAYER    BOTTOM OF
LAYER
        X COORDINATE                          (FT)        8.00000           12.0000
        EFFECTIVE UNIT WEIGHT         (KIP/FT**3)        0.13000           0.13000
        FRICTION ANGLE                  (DEGREES)        36.0000           36.0000
        P-Y SUBGRADE MODULUS          (KIP/IN**3)        0.22500           0.22500
        ULTIMATE UNIT SIDE FRICTION   (KIP/FT**2)        0.51802 (P)       0.86095
(P)
        ULTIMATE UNIT TIP RESISTANCE  (KIP/FT**2)        0.00000           0.00000

        LAYER  4
        THE SOIL IS A STIFF CLAY WITHOUT FREE WATER
                                                      TOP OF LAYER    BOTTOM OF
LAYER
        X COORDINATE                          (FT)        12.0000           16.0000
        EFFECTIVE UNIT WEIGHT         (KIP/FT**3)        0.13000           0.13000
        UNDRAINED COHESION, C         (KIP/FT**2)        4.00000           4.00000
        STRAIN AT 50% STRESS                         5.00000E-03       5.00000E-03
        ULTIMATE UNIT SIDE FRICTION   (KIP/FT**2)        1.63579 (P)       0.75993
(P)
        ULTIMATE UNIT TIP RESISTANCE  (KIP/FT**2)        0.00000           0.00000

        LAYER  5
        THE SOIL IS A STIFF CLAY WITHOUT FREE WATER
                                                      TOP OF LAYER    BOTTOM OF
LAYER
        X COORDINATE                          (FT)        16.0000           19.0000
        EFFECTIVE UNIT WEIGHT         (KIP/FT**3)        0.12000           0.12000
        UNDRAINED COHESION, C         (KIP/FT**2)        1.00000           1.00000
        STRAIN AT 50% STRESS                         1.00000E-02       1.00000E-02
```

```
        ULTIMATE UNIT SIDE FRICTION   (KIP/FT**2)        0.75993 (P)       0.81701
(P)
        ULTIMATE UNIT TIP RESISTANCE  (KIP/FT**2)        0.00000           0.00000

        LAYER  6
        THE SOIL IS A STIFF CLAY WITH FREE WATER
                                                          TOP OF LAYER    BOTTOM OF
LAYER
        X COORDINATE                          (FT)        19.0000           22.0000
        EFFECTIVE UNIT WEIGHT         (KIP/FT**3)      0.0576000         0.0576000
        UNDRAINED COHESION, C         (KIP/FT**2)        1.00000           1.00000
        P-Y SUBGRADE MODULUS          (KIP/IN**3)        0.25000 (K)       0.25000
(K)
                                                        0.1000000 (C)     0.1000000
(C)
        STRAIN AT 50% STRESS                         1.00000E-02       1.00000E-02
        ULTIMATE UNIT SIDE FRICTION   (KIP/FT**2)        0.81701 (P)       0.42152
(P)
        ULTIMATE UNIT TIP RESISTANCE  (KIP/FT**2)        0.00000           0.00000

        LAYER  7
        THE SOIL IS A SOFT CLAY
                                                          TOP OF LAYER    BOTTOM OF
LAYER
        X COORDINATE                          (FT)        22.0000           69.0000
        EFFECTIVE UNIT WEIGHT         (KIP/FT**3)      0.0376000         0.0376000
        UNDRAINED COHESION, C         (KIP/FT**2)        0.25000           0.25000
        STRAIN AT 50% STRESS                            0.0200000         0.0200000
        ULTIMATE UNIT SIDE FRICTION   (KIP/FT**2)        0.42152 (P)       232.132
(P)
        ULTIMATE UNIT TIP RESISTANCE  (KIP/FT**2)        0.00000           0.00000

        LAYER  8
        THE LAYER IS A WEAK ROCK
                                                          TOP OF LAYER    BOTTOM OF
LAYER
        X COORDINATE                          (FT)        69.0000           76.0000
        EFFECTIVE UNIT WEIGHT         (KIP/FT**3)        0.15000           0.15000
        UNIAXIAL COMPRESSIVE STRENGTH (KIP/IN**2)        15.0000           15.0000
        YOUNG MODULUS,ER              (KIP/IN**2)        0.00000           0.00000
        KRM                                          1.00000E-03       1.00000E-03
        RQD                                   (%)        55.0000           55.0000
        ULTIMATE UNIT SIDE FRICTION   (KIP/FT**2)        216.000 (P)       216.000
(P)
        ULTIMATE UNIT TIP RESISTANCE  (KIP/FT**2)        19440.0 (R)       19440.0
(R)

      Notes :  Program estimated values for listed parameters
               if zero input values were entered:
               (K) P-Y SUBGRADE MODULUS for Static Loading
```

(C) P-Y SUBGRADE MODULUS for Cyclic Loading
(P) ULTIMATE UNIT SIDE FRICTION for Driven Piles
(R) ULTIMATE UNIT TIP RESISTANCE for Driven Piles

* TABLE H * AXIAL LOAD VS DISPLACEMENT

AXIAL LOAD-DISPLACEMENT CURVES GENERATED INTERNALLY

NUM OF CURVES 1

CURVE 1 NUM OF POINTS 19

DISPLACEMENT, IN	AXIAL LOAD,KIP
-12.1769	-9939.57
-11.1769	-9939.57
-10.6769	-9939.57
-10.4174	-10070.1
-10.3706	-10075.6
-7.30891	-7252.80
-5.62508	-5653.58
-1.85676	-1978.11
-0.22713	-359.114
0.00000	0.00000
0.65528	788.391
4.88981	4947.26
8.76070	8613.53
10.4216	10148.7
13.1492	12612.7
14.2818	13601.0
14.9224	13820.9
15.4224	13820.9
16.4224	13820.9

* TABLE I * TORS. MOM. VS ANGLE ROT.

TORQUE-ROTATION CURVES GENERATED INTERNALLY

NUM OF CURVES 1

CURVE 1 NUM OF POINTS 19

ROT. ANGLE,Rad.	TORS.MOMEN,KIP-IN
-4.17993	-70667.3
-4.03929	-70667.3
-3.96896	-70667.3
-3.94412	-71206.2

-3.94287	-71312.8
-3.23757	-59267.3
-2.85287	-52578.7
-1.85283	-34897.9
-0.45363	-9406.85
0.00000	0.00000
0.45363	9406.85
1.85283	34897.9
2.85287	52578.7
3.23757	59267.3
3.94287	71312.8
3.94412	71206.2
3.96896	70667.3
4.03929	70667.3
4.17993	70667.3

* TABLE J * MOMENT CURVATURE SETS

* TABLE K * REDUCTION FACTORS

REDUCTION FACTORS FOR CLOSELY-SPACED PILE GROUPS ALONG Y-DIRECTION

GROUP NO	P-FACTOR	Y-FACTOR
1	0.8260	1.0000
2	0.8260	1.0000
3	0.8260	1.0000
4	0.8260	1.0000
5	0.8260	1.0000
6	0.8260	1.0000
7	0.8260	1.0000
8	0.8260	1.0000

REDUCTION FACTORS FOR CLOSELY-SPACED PILE GROUPS ALONG Z-DIRECTION

GROUP NO	P-FACTOR	Y-FACTOR
1	0.8260	1.0000
2	0.6510	1.0000
3	0.5020	1.0000
4	0.5020	1.0000
5	0.5020	1.0000
6	0.5020	1.0000
7	0.5020	1.0000
8	0.5020	1.0000

FIRST ANALYSIS (GROUP PROGRAM) OUTPUT
BEGIN ABUTMENT

```
==========================================================================

                 GROUP for Windows, Version 2019.11.10

                  Serial Number : 235486675

                  Analysis of A Group of Piles
               Subjected to Axial and Lateral Loading

                (c) Copyright ENSOFT, Inc., 1987-2018
                      All Rights Reserved

==========================================================================


--------------------------------------------------------------------------
                     Time and Date of Analysis
--------------------------------------------------------------------------

          Date:  September 10, 2025     Time:  11:27:36



            *****     COMPUTATION RESULTS     *****



New Group




            *****     LOAD CASES RESULTS      *****



LOAD CASE :     1
CASE NAME : Load Case

LOAD TYPE : Dead, DL

  REDUCTION FACTORS FOR CLOSELY-SPACED PILE GROUPS, COMBINED Y AND Z DIRECTIONS
  ESTIMATED USING MOVEMENT IN THE DIRECTION OF PILE CAP DISPLACEMENTS

       GROUP NO     P-FACTOR     Y-FACTOR

           1           0.8260       1.0000
           2           0.8260       1.0000
```

3	0.8260	1.0000
4	0.8260	1.0000
5	0.8260	1.0000
6	0.8260	1.0000
7	0.8260	1.0000
8	0.8260	1.0000

* TABLE L * COMPUTATION ON PILE CAP

* EQUIVALENT CONCENTRATED LOAD AT ORIGIN *

VERT. LOAD,KIPS	HOR. LOAD Y,KIPS	HOR. LOAD Z,KIPS
1202.33	-2044.59	9.24773E-33

MOMENT X ,KIP-IN	MOMENT Y,KIP-IN	MOMENT Z,KIP-IN
7.45058E-12	0.00000	-1.53438E+05

* DISPLACEMENT OF GROUPED PILE FOUNDATION AT ORIGIN *

VERTICAL ,IN	HORIZONTAL Y,IN	HORIZONTAL Z,IN
0.12492	-1.28000	3.64221E-33

ANGLE ROT. X,RAD	ANGLE ROT. Y,RAD	ANGLE ROT. Z,RAD
-1.07989E-18	6.59959E-36	-0.0129200

THE GLOBAL STRUCTURAL COORDINATE SYSTEM
---

* PILE TOP DISPLACEMENTS *

PILE GROUP	DISP. X,IN	DISP. Y,IN	DISP. Z,IN	ROT. X,RAD	ROT. Y,RAD	ROT. Z,RAD
**********	**********	**********	**********	**********	**********	**********
1	0.1249	-1.2800	3.6422E-33	-1.0799E-18	6.5996E-36	-0.012920
2	0.1249	-1.2800	3.6422E-33	-1.0799E-18	6.5996E-36	-0.012920
3	0.1249	-1.2800	3.6422E-33	-1.0799E-18	6.5996E-36	-0.012920
4	0.1249	-1.2800	3.6422E-33	-1.0799E-18	6.5996E-36	-0.012920
5	0.1249	-1.2800	3.6422E-33	-1.0799E-18	6.5996E-36	

```
-0.012920
          6            0.1249      -1.2800   3.6422E-33  -1.0799E-18   6.5996E-36
-0.012920
          7            0.1249      -1.2800   3.6422E-33  -1.0799E-18   6.5996E-36
-0.012920
          8            0.1249      -1.2800   3.6422E-33  -1.0799E-18   6.5996E-36
-0.012920

       MINIMUM         0.1249      -1.2800   3.6422E-33  -1.0799E-18   6.5996E-36
-0.012920
       Pile N.          1            1            1            1            1
    1
       MAXIMUM         0.1249      -1.2800   3.6422E-33  -1.0799E-18   6.5996E-36
-0.012920
       Pile N.          1            1            1            1            1
    1

       * PILE TOP REACTIONS *

      PILE GROUP   FOR. X,KIP   FOR. Y,KIP   FOR. Z,KIP MOM X,KIP-IN MOM Y,KIP-IN
MOM Z,KIP-IN
      **********  ***********  ***********  ***********  ***********  ***********
***********
          1            150.29      -255.57  -9.8962E-46  -5.1277E-46   8.3741E-30
-1.9180E+04
          2            150.29      -255.57  -9.8962E-46  -5.1277E-46   8.3741E-30
-1.9180E+04
          3            150.29      -255.57  -1.0074E-45  -5.1277E-46   8.3741E-30
-1.9180E+04
          4            150.29      -255.57  -1.0074E-45  -5.1277E-46   8.3741E-30
-1.9180E+04
          5            150.29      -255.57  -1.0074E-45  -5.1277E-46   8.3741E-30
-1.9180E+04
          6            150.29      -255.57  -1.0074E-45  -5.1277E-46   8.3741E-30
-1.9180E+04
          7            150.29      -255.57  -2.4097E-45  -5.1277E-46   8.3741E-30
-1.9180E+04
          8            150.29      -255.57  -2.4097E-45  -5.1277E-46   8.3741E-30
-1.9180E+04

       MINIMUM         150.29      -255.57  -2.4097E-45  -5.1277E-46   8.3741E-30
-1.9180E+04
       Pile N.          1            1            7            1            1
    1
       MAXIMUM         150.29      -255.57  -9.8962E-46  -5.1277E-46   8.3741E-30
-1.9180E+04
       Pile N.          1            1            1            1            1
    1
```

THE PILE COORDINATE SYSTEM (LOCAL AXES)
---

* PILE TOP DISPLACEMENTS *

PILE GROUP	DISP. x,IN	DISP. y,IN	DISP. z,IN	ROT. x,RAD	ROT. y,RAD	ROT. z,RAD
**********	**********	**********	**********	**********	**********	**********
1	0.1249	-1.2800	3.6422E-33	-1.0799E-18	7.2724E-35	-0.012920
2	0.1249	-1.2800	3.6422E-33	-1.0799E-18	7.2724E-35	-0.012920
3	0.1249	-1.2800	3.6422E-33	-1.0799E-18	7.2724E-35	-0.012920
4	0.1249	-1.2800	3.6422E-33	-1.0799E-18	7.2724E-35	-0.012920
5	0.1249	-1.2800	3.6422E-33	-1.0799E-18	7.2724E-35	-0.012920
6	0.1249	-1.2800	3.6422E-33	-1.0799E-18	7.2724E-35	-0.012920
7	0.1249	-1.2800	3.6422E-33	-1.0799E-18	7.2724E-35	-0.012920
8	0.1249	-1.2800	3.6422E-33	-1.0799E-18	7.2724E-35	-0.012920
MINIMUM	0.1249	-1.2800	3.6422E-33	-1.0799E-18	7.2724E-35	-0.012920
Pile N.	1	1	1	1	1	1
MAXIMUM	0.1249	-1.2800	3.6422E-33	-1.0799E-18	7.2724E-35	-0.012920
Pile N.	1	1	1	1	1	1

* PILE TOP REACTIONS *

PILE GROUP	AXIAL,KIP	LAT. y,KIP	LAT. z,KIP	MOM x,KIP-IN	MOM y,KIP-IN	MOM z,KIP-IN
**********	**********	**********	**********	**********	**********	**********
1	150.29	-255.57	-9.8962E-46	0.0000	8.3741E-30	-1.9180E+04
2	150.29	-255.57	-9.8962E-46	0.0000	8.3741E-30	-1.9180E+04
3	150.29	-255.57	-1.0074E-45	0.0000	8.3741E-30	-1.9180E+04
4	150.29	-255.57	-1.0074E-45	0.0000	8.3741E-30	-1.9180E+04
5	150.29	-255.57	-1.0074E-45	0.0000	8.3741E-30	

```
-1.9180E+04
          6            150.29      -255.57  -1.0074E-45       0.0000   8.3741E-30
-1.9180E+04
          7            150.29      -255.57  -2.4097E-45       0.0000   8.3741E-30
-1.9180E+04
          8            150.29      -255.57  -2.4097E-45       0.0000   8.3741E-30
-1.9180E+04

       MINIMUM         150.29      -255.57  -2.4097E-45       0.0000   8.3741E-30
-1.9180E+04
       Pile N.          1            1            7            1            1
    1
       MAXIMUM         150.29      -255.57  -9.8962E-46       0.0000   8.3741E-30
-1.9180E+04
       Pile N.          1            1            1            1            1
    1

      PILE GROUP   STRESS,KIP/IN**2
      **********  ****************
          1            138.96
          2            138.96
          3            138.96
          4            138.96
          5            138.96
          6            138.96
          7            138.96
          8            138.96

       MINIMUM         138.96
       Pile N.          1
       MAXIMUM         138.96
       Pile N.          1

       * EFFECTS FOR LATERALLY LOADED PILE *

       * MINIMUM VALUES AND LOCATIONS *

     PILE     DISPL.      DISPL.      MOMENT      MOMENT       SHEAR       SHEAR
SOIL REACT  SOIL REACT     TOTAL    FLEX. RIG.  FLEX. RIG.
               y-DIR       z-DIR       z-DIR       y-DIR       y-DIR       z-DIR
  y-DIR       z-DIR      STRESS       z-DIR       y-DIR
                IN          IN        KIP-IN      KIP-IN        KIP         KIP
 KIP/IN      KIP/IN     KIP/IN**2   KIP-IN**2   KIP-IN**2
    ******  **********  **********  **********  **********  **********  **********
**********  **********  **********  **********  **********
        1      -1.4165 -8.3273E-35     -4114.0 -6.1318E-31     -254.48 -8.1308E-32
  -3.7535 -6.0427E-33      5.2274  2.9572E+07  1.0621E+07
     x(FT)      2.2800      10.640      11.400      14.440      0.0000      8.3600
   9.1200      14.440      67.640      0.0000      0.0000
        2      -1.4165 -8.3273E-35     -4114.0 -6.1318E-31     -254.48 -8.1308E-32
```

```
  -3.7535 -6.0427E-33      5.2274  2.9572E+07  1.0621E+07
     x(FT)      2.2800      10.640      11.400      14.440      0.0000      8.3600
   9.1200      14.440      67.640      0.0000      0.0000
       3      -1.4165 -8.3273E-35     -4114.0 -6.1318E-31     -254.48 -8.1308E-32
  -3.7535 -6.0427E-33      5.2274  2.9572E+07  1.0621E+07
     x(FT)      2.2800      10.640      11.400      14.440      0.0000      8.3600
   9.1200      14.440      67.640      0.0000      0.0000
       4      -1.4165 -8.3273E-35     -4114.0 -6.1318E-31     -254.48 -8.1308E-32
  -3.7535 -6.0427E-33      5.2274  2.9572E+07  1.0621E+07
     x(FT)      2.2800      10.640      11.400      14.440      0.0000      8.3600
   9.1200      14.440      67.640      0.0000      0.0000
       5      -1.4165 -8.3273E-35     -4114.0 -6.1318E-31     -254.48 -8.1308E-32
  -3.7535 -6.0427E-33      5.2274  2.9572E+07  1.0621E+07
     x(FT)      2.2800      10.640      11.400      14.440      0.0000      8.3600
   9.1200      14.440      67.640      0.0000      0.0000
       6      -1.4165 -8.3273E-35     -4114.0 -6.1318E-31     -254.48 -8.1308E-32
  -3.7535 -6.0427E-33      5.2274  2.9572E+07  1.0621E+07
     x(FT)      2.2800      10.640      11.400      14.440      0.0000      8.3600
   9.1200      14.440      67.640      0.0000      0.0000
       7      -1.4165 -8.3273E-35     -4114.0 -6.1318E-31     -254.48 -8.1308E-32
  -3.7535 -6.0427E-33      5.2274  2.9572E+07  1.0621E+07
     x(FT)      2.2800      10.640      11.400      14.440      0.0000      8.3600
   9.1200      14.440      67.640      0.0000      0.0000
       8      -1.4165 -8.3273E-35     -4114.0 -6.1318E-31     -254.48 -8.1308E-32
  -3.7535 -6.0427E-33      5.2274  2.9572E+07  1.0621E+07
     x(FT)      2.2800      10.640      11.400      14.440      0.0000      8.3600
   9.1200      14.440      67.640      0.0000      0.0000

      Min.     -1.4165 -8.3273E-35     -4114.0 -6.1318E-31     -254.48 -8.1308E-32
  -3.7535 -6.0427E-33      5.2274  2.9572E+07  1.0621E+07
   Pile N.       1           1           1           1           1           1
    1           1           1           1           1

      * MAXIMUM VALUES AND LOCATIONS *

     PILE     DISPL.      DISPL.      MOMENT      MOMENT       SHEAR       SHEAR
SOIL REACT  SOIL REACT     TOTAL    FLEX. RIG.  FLEX. RIG.
               y-DIR       z-DIR       z-DIR       y-DIR       y-DIR       z-DIR
  y-DIR       z-DIR      STRESS       z-DIR       y-DIR
               IN          IN        KIP-IN      KIP-IN        KIP         KIP
 KIP/IN      KIP/IN     KIP/IN**2   KIP-IN**2   KIP-IN**2
    ******  **********  **********  **********  **********  **********  **********
**********  **********  **********  **********  **********
        1       0.1482  3.6422E-33  1.9180E+04  8.4288E-30      49.943  1.2639E-32
   1.1477  1.2457E-33      138.96  2.9572E+07  1.0621E+07
     x(FT)      22.040      0.0000      0.0000      0.7600      14.440      15.200
   15.960      0.7600      0.0000      0.0000      0.0000
        2       0.1482  3.6422E-33  1.9180E+04  8.4288E-30      49.943  1.2639E-32
   1.1477  1.2457E-33      138.96  2.9572E+07  1.0621E+07
     x(FT)      22.040      0.0000      0.0000      0.7600      14.440      15.200
```

```
15.960      0.7600      0.0000      0.0000      0.0000
     3       0.1482  3.6422E-33  1.9180E+04  8.4288E-30      49.943  1.2639E-32
1.1477  1.2457E-33      138.96  2.9572E+07  1.0621E+07
  x(FT)      22.040      0.0000      0.0000      0.7600      14.440      15.200
15.960      0.7600      0.0000      0.0000      0.0000
     4       0.1482  3.6422E-33  1.9180E+04  8.4288E-30      49.943  1.2639E-32
1.1477  1.2457E-33      138.96  2.9572E+07  1.0621E+07
  x(FT)      22.040      0.0000      0.0000      0.7600      14.440      15.200
15.960      0.7600      0.0000      0.0000      0.0000
     5       0.1482  3.6422E-33  1.9180E+04  8.4288E-30      49.943  1.2639E-32
1.1477  1.2457E-33      138.96  2.9572E+07  1.0621E+07
  x(FT)      22.040      0.0000      0.0000      0.7600      14.440      15.200
15.960      0.7600      0.0000      0.0000      0.0000
     6       0.1482  3.6422E-33  1.9180E+04  8.4288E-30      49.943  1.2639E-32
1.1477  1.2457E-33      138.96  2.9572E+07  1.0621E+07
  x(FT)      22.040      0.0000      0.0000      0.7600      14.440      15.200
15.960      0.7600      0.0000      0.0000      0.0000
     7       0.1482  3.6422E-33  1.9180E+04  8.4288E-30      49.943  1.2639E-32
1.1477  1.2457E-33      138.96  2.9572E+07  1.0621E+07
  x(FT)      22.040      0.0000      0.0000      0.7600      14.440      15.200
15.960      0.7600      0.0000      0.0000      0.0000
     8       0.1482  3.6422E-33  1.9180E+04  8.4288E-30      49.943  1.2639E-32
1.1477  1.2457E-33      138.96  2.9572E+07  1.0621E+07
  x(FT)      22.040      0.0000      0.0000      0.7600      14.440      15.200
15.960      0.7600      0.0000      0.0000      0.0000

   Max.      0.1482  3.6422E-33  1.9180E+04  8.4288E-30      49.943  1.2639E-32
1.1477  1.2457E-33      138.96  2.9572E+07  1.0621E+07
Pile N.       1           1           1           1           1           1
 1           1           1           1           1


              *****     SUMMARY FOR LOAD CASES AND COMBINATIONS      *****


              *****     LOAD CASES RESULTS      *****

   LOAD CASE :     1

   * TABLE L *   COMPUTATION ON PILE CAP

   * EQUIVALENT CONCENTRATED LOAD AT ORIGIN *
         LOAD X,KIP     LOAD Y,KIP     LOAD Z,KIP    MOM X,KIP-IN   MOM Y,KIP-IN
MOM Z,KIP-IN
              1202.33       -2044.59    9.24773E-33    7.45058E-12        0.00000
-1.53438E+05

   * DISPLACEMENT OF GROUPED PILE FOUNDATION AT ORIGIN *
```

```
            DISP X,IN      DISP Y,IN      DISP Z,IN      ROT X,RAD      ROT Y,RAD
  ROT Z,RAD
               0.12492       -1.28000    3.64221E-33   -1.07989E-18    6.59959E-36
  -0.0129200

       * PILE TOP DISPLACEMENTS, GLOBAL *
                   DISP. X,IN   DISP. Y,IN   DISP. Z,IN   ROT. X,RAD   ROT. Y,RAD
ROT. Z,RAD
                  ***********  ***********  ***********  ***********  ***********
***********
       MINIMUM         0.1249      -1.2800   3.6422E-33  -1.0799E-18   6.5996E-36
-0.012920
       Pile N.          1            1            1            1            1
    1
       MAXIMUM         0.1249      -1.2800   3.6422E-33  -1.0799E-18   6.5996E-36
-0.012920
       Pile N.          1            1            1            1            1
    1

       * PILE TOP REACTIONS, GLOBAL *
                   FOR. X,KIP   FOR. Y,KIP   FOR. Z,KIP MOM X,KIP-IN MOM Y,KIP-IN
MOM Z,KIP-IN
                  ***********  ***********  ***********  ***********  ***********
***********
       MINIMUM         150.29      -255.57  -2.4097E-45  -5.1277E-46   8.3741E-30
-1.9180E+04
       Pile N.          1            1            7            1            1
    1
       MAXIMUM         150.29      -255.57  -9.8962E-46  -5.1277E-46   8.3741E-30
-1.9180E+04
       Pile N.          1            1            1            1            1
    1

       * PILE TOP DISPLACEMENTS, LOCAL *
                   DISP. x,IN   DISP. y,IN   DISP. z,IN   ROT. x,RAD   ROT. y,RAD
ROT. z,RAD
                  ***********  ***********  ***********  ***********  ***********
***********
       MINIMUM         0.1249      -1.2800   3.6422E-33  -1.0799E-18   7.2724E-35
-0.012920
       Pile N.          1            1            1            1            1
    1
       MAXIMUM         0.1249      -1.2800   3.6422E-33  -1.0799E-18   7.2724E-35
-0.012920
       Pile N.          1            1            1            1            1
    1

       * PILE TOP REACTIONS, LOCAL *
                   AXIAL,KIP    LAT. y,KIP   LAT. z,KIP MOM x,KIP-IN MOM y,KIP-IN
MOM z,KIP-IN
```

```
                  ***********  ***********  ***********  ***********  ***********
***********
       MINIMUM         150.29      -255.57  -2.4097E-45       0.0000   8.3741E-30
-1.9180E+04
       Pile N.          1            1            7            1            1
    1
       MAXIMUM         150.29      -255.57  -9.8962E-46       0.0000   8.3741E-30
-1.9180E+04
       Pile N.          1            1            1            1            1
    1

       * EFFECTS FOR LATERALLY LOADED PILE *

     PILE     DISPL.      DISPL.      MOMENT      MOMENT       SHEAR       SHEAR
SOIL REACT  SOIL REACT     TOTAL
               y-DIR       z-DIR       z-DIR       y-DIR       y-DIR       z-DIR
  y-DIR       z-DIR      STRESS
                IN          IN        KIP-IN      KIP-IN        KIP         KIP
 KIP/IN      KIP/IN     KIP/IN**2
    ******  **********  **********  **********  **********  **********  **********
**********  **********  **********
      Min.     -1.4165 -8.3273E-35     -4114.0 -6.1318E-31     -254.48 -8.1308E-32
  -3.7535 -6.0427E-33      5.2274
   Pile N.       1           1           1           1           1           1
    1           1           1
      Max.      0.1482  3.6422E-33  1.9180E+04  8.4288E-30      49.943  1.2639E-32
   1.1477  1.2457E-33      138.96
   Pile N.       1           1           1           1           1           1
    1           1           1
```

SECOND ANALYSIS (LPILE) INPUT & OUTPUT
BEGIN ABUTMENT

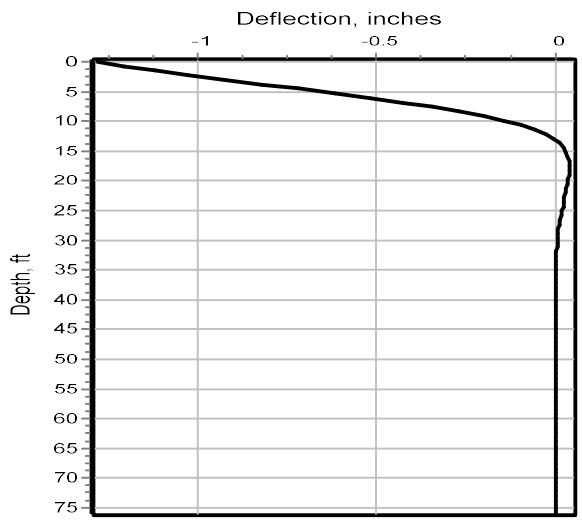
Deflection, inches
-1
-0.5
0
Depth, ft
0
5
10
15
20
25
30
35
40
45
50
55
60
65
70
75

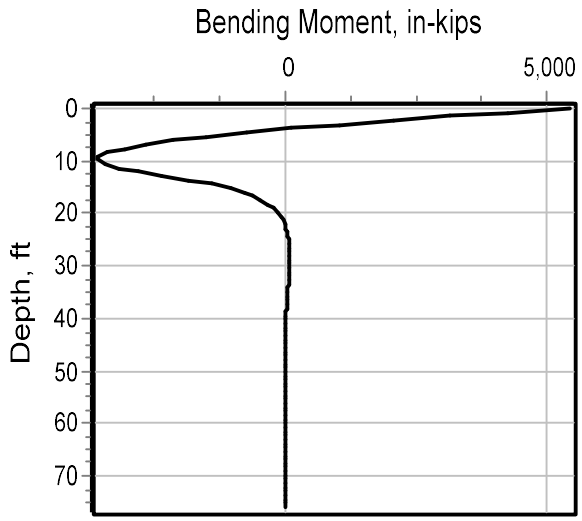
Bending Moment, in-kips
0
5,000
Depth, ft
0
10
20
30
40
50
60
70

Shear Force, kips
-100
-50
0
50
Depth, ft
0
5
10
15
20
25
30
35
40
45
50
55
60
65
70
75

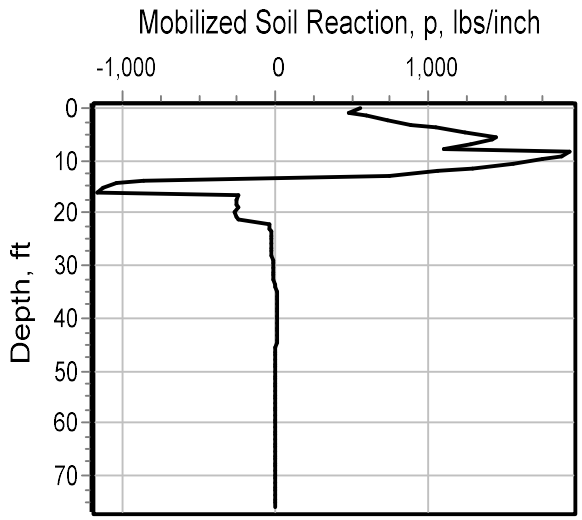
Mobilized Soil Reaction, p, lbs/inch
-1,000
0
1,000
Depth, ft
0
10
20
30
40
50
60
70

==========

LPile for Windows, Version 2019-11.009

Analysis of Individual Piles and Drilled Shafts
Subjected to Lateral Loading Using the p-y Method
© 1985-2019 by Ensoft, Inc.
All Rights Reserved

==========

This copy of LPile is being used by:

kc
kc

Serial Number of Security Device: 181921636

This copy of LPile is licensed for exclusive use by:

KC Engineering and Land Surveyin

Use of this program by any entity other than KC Engineering and Land Surveyin
is a violation of the software license agreement.

Files Used for Analysis

Path to file locations:
\120179-NYSTA_D214866_TermBridge\Task_2\50 Design
Documents\Geotech\Abutment_Foundation_Design\West_Abutment\GROUP\HP14X117 no
downdrag\LPile\

Name of input data file:
HP14x117no_downdrag.lp11d

Name of output report file:
HP14x117no_downdrag.lp11o

Name of plot output file:
HP14x117no_downdrag.lp11p

Name of runtime message file:
HP14x117no_downdrag.lp11r

Date and Time of Analysis

Date: September 10, 2025 Time: 14:57:41

Problem Title

Project Name:Replacement of Malden Turnpike (CR-34) Bridge

Job Number: D214866

Client: NYSTA

Engineer: KC Engineering

Description:

Program Options and Settings

Computational Options:
- Conventional Analysis

Engineering Units Used for Data Input and Computations:
- US Customary System Units (pounds, feet, inches)

Analysis Control Options:

- Maximum number of iterations allowed	=	500	
- Deflection tolerance for convergence	=	1.0000E-05	in
- Maximum allowable deflection	=	100.0000	in
- Number of pile increments	=	100	

Loading Type and Number of Cycles of Loading:
- Static loading specified

```
 - Use of p-y modification factors for p-y curves not selected
 - Analysis uses layering correction (Method of Georgiadis)
 - No distributed lateral loads are entered
 - Loading by lateral soil movements acting on pile not selected
 - Input of shear resistance at the pile tip not selected
 - Input of moment resistance at the pile tip not selected
 - Input of side resistance moment along pile not selected
 - Computation of pile-head foundation stiffness matrix not selected
 - Push-over analysis of pile not selected
 - Buckling analysis of pile not selected

Output Options:
 - Output files use decimal points to denote decimal symbols.
 - Values of pile-head deflection, bending moment, shear force, and
   soil reaction are printed for full length of pile.
 - Printing Increment (nodal spacing of output points) = 1
 - No p-y curves to be computed and reported for user-specified depths
 - Print using wide report formats



--------------------------------------------------------------------------------
                     Pile Structural Properties and Geometry
--------------------------------------------------------------------------------

Number of pile sections defined                        =            1
Total length of pile                                   =       76.000 ft
Depth of ground surface below top of pile              =      -3.0000 ft

Pile diameters used for p-y curve computations are defined using 2 points.

p-y curves are computed using pile diameter values interpolated with depth over
the length of the pile. A summary of values of pile diameter vs. depth follows.

            Depth Below           Pile
Point        Pile Head          Diameter
 No.            feet             inches
-----      -------------     -------------
  1             0.000           14.0800
  2            76.000           14.0800


Input Structural Properties for Pile Sections:
----------------------------------------------

Pile Section No. 1:

   Section 1 is a H strong axis steel pile
```

```
   Length of section                                    =    76.000000 ft
   Pile width                                           =    14.080000 in
   Shear capacity of section                            =       0.0000 lbs



--------------------------------------------------------------------------------
                        Ground Slope and Pile Batter Angles
--------------------------------------------------------------------------------

Ground Slope Angle                                      =        0.000 degrees
                                                        =        0.000 radians

Pile Batter Angle                                       =        0.000 degrees
                                                        =        0.000 radians


--------------------------------------------------------------------------------
                        Soil and Rock Layering Information
--------------------------------------------------------------------------------

The soil profile is modelled using 8 layers

Layer 1 is sand, p-y criteria by Reese et al., 1974

   Distance from top of pile to top of layer            =    -3.000000 ft
   Distance from top of pile to bottom of layer         =       0.0000 ft
   Effective unit weight at top of layer                =   130.000000 pcf
   Effective unit weight at bottom of layer             =   130.000000 pcf
   Friction angle at top of layer                       =    36.000000 deg.
   Friction angle at bottom of layer                    =    36.000000 deg.
   Subgrade k at top of layer                           =   225.000000 pci
   Subgrade k at bottom of layer                        =   225.000000 pci


Layer 2 is sand, p-y criteria by Reese et al., 1974

   Distance from top of pile to top of layer            =       0.0000 ft
   Distance from top of pile to bottom of layer         =     8.000000 ft
   Effective unit weight at top of layer                =   110.000000 pcf
   Effective unit weight at bottom of layer             =   110.000000 pcf
   Friction angle at top of layer                       =    28.000000 deg.
   Friction angle at bottom of layer                    =    28.000000 deg.
   Subgrade k at top of layer                           =    25.000000 pci
   Subgrade k at bottom of layer                        =    25.000000 pci


Layer 3 is sand, p-y criteria by Reese et al., 1974
```

```
   Distance from top of pile to top of layer          =     8.000000 ft
   Distance from top of pile to bottom of layer       =    12.000000 ft
   Effective unit weight at top of layer              =   130.000000 pcf
   Effective unit weight at bottom of layer           =   130.000000 pcf
   Friction angle at top of layer                     =    36.000000 deg.
   Friction angle at bottom of layer                  =    36.000000 deg.
   Subgrade k at top of layer                         =   225.000000 pci
   Subgrade k at bottom of layer                      =   225.000000 pci


Layer 4 is stiff clay without free water

   Distance from top of pile to top of layer          =    12.000000 ft
   Distance from top of pile to bottom of layer       =    16.000000 ft
   Effective unit weight at top of layer              =   130.000000 pcf
   Effective unit weight at bottom of layer           =   130.000000 pcf
   Undrained cohesion at top of layer                 =        4000. psf
   Undrained cohesion at bottom of layer              =        4000. psf
   Epsilon-50 at top of layer                         =     0.005000
   Epsilon-50 at bottom of layer                      =     0.005000


Layer 5 is stiff clay without free water

   Distance from top of pile to top of layer          =    16.000000 ft
   Distance from top of pile to bottom of layer       =    19.000000 ft
   Effective unit weight at top of layer              =   120.000000 pcf
   Effective unit weight at bottom of layer           =   120.000000 pcf
   Undrained cohesion at top of layer                 =  1000.000000 psf
   Undrained cohesion at bottom of layer              =  1000.000000 psf
   Epsilon-50 at top of layer                         =     0.010000
   Epsilon-50 at bottom of layer                      =     0.010000


Layer 6 is stiff clay with water-induced erosion

   Distance from top of pile to top of layer          =    19.000000 ft
   Distance from top of pile to bottom of layer       =    22.000000 ft
   Effective unit weight at top of layer              =    57.600000 pcf
   Effective unit weight at bottom of layer           =    57.600000 pcf
   Undrained cohesion at top of layer                 =  1000.000000 psf
   Undrained cohesion at bottom of layer              =  1000.000000 psf
   Epsilon-50 at top of layer                         =     0.010000
   Epsilon-50 at bottom of layer                      =     0.010000
   Subgrade k at top of layer                         =       0.0000 pci
   Subgrade k at bottom of layer                      =       0.0000 pci

   NOTE: Default values for subgrade k will be computed for this layer.

Layer 7 is soft clay, p-y criteria by Matlock, 1970
```

```
   Distance from top of pile to top of layer          =    22.000000 ft
   Distance from top of pile to bottom of layer       =    69.000000 ft
   Effective unit weight at top of layer              =    37.600000 pcf
   Effective unit weight at bottom of layer           =    37.600000 pcf
   Undrained cohesion at top of layer                 =   250.000000 psf
   Undrained cohesion at bottom of layer              =   250.000000 psf
   Epsilon-50 at top of layer                         =     0.020000
   Epsilon-50 at bottom of layer                      =     0.020000


Layer 8 is weak rock, p-y criteria by Reese, 1997

   Distance from top of pile to top of layer          =    69.000000 ft
   Distance from top of pile to bottom of layer       =    76.000000 ft
   Effective unit weight at top of layer              =   150.000000 pcf
   Effective unit weight at bottom of layer           =   150.000000 pcf
   Uniaxial compressive strength at top of layer      =       15000. psi
   Uniaxial compressive strength at bottom of layer   =       15000. psi
   Initial modulus of rock at top of layer            =       0.0000 psi
   Initial modulus of rock at bottom of layer         =       0.0000 psi
   RQD of rock at top of layer                        =    55.000000 %
   RQD of rock at bottom of layer                     =    55.000000 %
   k rm of rock at top of layer                       =    0.0010000
   k rm of rock at bottom of layer                    =    0.0010000


 (Depth of the lowest soil layer extends 0.000 ft below the pile tip)


**** Warning - Possible Input Data Error ****

Values entered for effective unit weight of rock were outside the limits of
50 pcf to 150 pcf.

The maximum input value, in layer   1, for effective unit weight = 150.00 pcf

This data may be erroneous. Please check your data.



--------------------------------------------------------------------------------
                        Summary of Input Soil Properties
--------------------------------------------------------------------------------

Layer         Soil Type          Layer      Effective    Cohesion     Angle of
Uniaxial                      E50                     Rock Mass
 Num.           Name             Depth       Unit Wt.                 Friction
 qu          RQD %         or            kpy        Modulus
          (p-y Curve Type)        ft           pcf          psf          deg.
```

```
 psi                        krm          pci          psi
-----   -------------------   ----------   ----------   ----------   ----------
----------   ----------   ----------   ----------   ----------
  1            Sand              -3.0000     130.0000       --          36.0000
 --           --           --         225.0000       --
          (Reese, et al.)           0.00     130.0000       --          36.0000
 --           --           --         225.0000       --
  2            Sand                 0.00     110.0000       --          28.0000
 --           --           --          25.0000       --
          (Reese, et al.)         8.0000     110.0000       --          28.0000
 --           --           --          25.0000       --
  3            Sand               8.0000     130.0000       --          36.0000
 --           --           --         225.0000       --
          (Reese, et al.)        12.0000     130.0000       --          36.0000
 --           --           --         225.0000       --
  4         Stiff Clay           12.0000     130.0000        4000.       --
 --           --          0.00500       --            --
          w/o Free Water         16.0000     130.0000        4000.       --
 --           --          0.00500       --            --
  5         Stiff Clay           16.0000     120.0000    1000.0000       --
 --           --          0.01000       --            --
          w/o Free Water         19.0000     120.0000    1000.0000       --
 --           --          0.01000       --            --
  6         Stiff Clay           19.0000      57.6000    1000.0000       --
 --           --          0.01000     default         --
          with Free Water        22.0000      57.6000    1000.0000       --
 --           --          0.01000     default         --
  7            Soft              22.0000      37.6000     250.0000       --
 --           --          0.02000       --            --
               Clay             69.0000      37.6000     250.0000       --
 --           --          0.02000       --            --
  8            Weak              69.0000     150.0000       --           --
 15000.      55.0000      0.00100       --          default
               Rock             76.0000     150.0000       --           --
 15000.      55.0000      0.00100       --          default


--------------------------------------------------------------------------------
                              Static Loading Type
--------------------------------------------------------------------------------

Static loading criteria were used when computing p-y curves for all analyses.


--------------------------------------------------------------------------------
                Pile-head Loading and Pile-head Fixity Conditions
--------------------------------------------------------------------------------

Number of loads specified = 1
```

```
Load    Load         Condition                Condition            Axial Thrust
Compute Top y     Run Analysis
 No.    Type             1                        2                  Force, lbs
vs. Pile Length
-----   ----   --------------------   ------------------------   ----------------
---------------    ------------
   1     4     y =    -1.280000 in    M =     5458766. in-lbs            17529.
    N.A.               Yes

V = shear force applied normal to pile axis
M = bending moment applied to pile head
y = lateral deflection normal to pile axis
S = pile slope relative to original pile batter angle
R = rotational stiffness applied to pile head
Values of top y vs. pile lengths can be computed only for load types with
specified shear loading (Load Types 1, 2, and 3).
Thrust force is assumed to be acting axially for all pile batter angles.



--------------------------------------------------------------------------------
     Computations of Nominal Moment Capacity and Nonlinear Bending Stiffness
--------------------------------------------------------------------------------

Axial thrust force values were determined from pile-head loading conditions

Number of Pile Sections Analyzed = 1

Pile Section No. 1:
-------------------

Dimensions and Properties of Steel H Strong Axis:
---------------------------------------------

Length of Section                                        =    76.000000 ft
Flange Width                                             =    14.080000 in
Section Depth                                            =    14.780000 in
Flange Thickness                                         =     0.680000 in
Web Thickness                                            =     0.680000 in
Yield Stress of Pipe                                     =    50.000000 ksi
Elastic Modulus                                          =       29000. ksi
Cross-sectional Area                                     =    28.274400 sq. in.
Moment of Inertia                                        =        1089. in^4
Elastic Bending Stiffness                                =    31593714. kip-in^2
Plastic Modulus, Z                                       =   165.615428in^3
Plastic Moment Capacity = Fy Z                           =        8281.in-kip

Axial Structural Capacities:
----------------------------
```

Nom. Axial Structural Capacity = Fy As = 1413.720 kips
Nominal Axial Tensile Capacity = -1413.720 kips

Number of Axial Thrust Force Values Determined from Pile-head Loadings = 1

Number	Axial Thrust Force kips
1	17.529

Definition of Run Messages:

Y = part of pipe section has yielded.

Axial Thrust Force = 17.529 kips

Bending Curvature rad/in.	Bending Moment in-kip	Bending Stiffness kip-in2	Depth to N Axis in	Max Total Stress ksi	Run Msg
0.00000517	163.0733247	31564858.	11.5279636	1.7160766	
0.00001033	326.1466494	31564858.	9.4589818	2.8121931	
0.00001550	489.2199741	31564858.	8.7693212	3.9083096	
0.00002067	652.2932988	31564858.	8.4244909	5.0044261	
0.00002583	815.3666235	31564858.	8.2175927	6.1005427	
0.00003100	978.4399482	31564858.	8.0796606	7.1966592	
0.00003616	1142.	31564858.	7.9811377	8.2927757	
0.00004133	1305.	31564858.	7.9072454	9.3888922	
0.00004650	1468.	31564858.	7.8497737	10.4850087	
0.00005166	1631.	31564858.	7.8037964	11.5811252	
0.00005683	1794.	31564858.	7.7661785	12.6772417	
0.00006200	1957.	31564858.	7.7348303	13.7733582	
0.00006716	2120.	31564858.	7.7083049	14.8694747	
0.00007233	2283.	31564858.	7.6855688	15.9655912	
0.00007749	2446.	31564858.	7.6658642	17.0617077	
0.00008266	2609.	31564858.	7.6486227	18.1578243	
0.00008783	2772.	31564858.	7.6334096	19.2539408	
0.00009299	2935.	31564858.	7.6198869	20.3500573	
0.00009816	3098.	31564858.	7.6077876	21.4461738	
0.0001033	3261.	31564858.	7.5968982	22.5422903	
0.0001085	3425.	31564858.	7.5870459	23.6384068	
0.0001137	3588.	31564858.	7.5780893	24.7345233	
0.0001188	3751.	31564858.	7.5699115	25.8306398	
0.0001240	3914.	31564858.	7.5624151	26.9267563	
0.0001292	4077.	31564858.	7.5555185	28.0228728	

0.0001343	4240.	31564858.	7.5491524	29.1189894	
0.0001395	4403.	31564858.	7.5432579	30.2151059	
0.0001447	4566.	31564858.	7.5377844	31.3112224	
0.0001498	4729.	31564858.	7.5326884	32.4073389	
0.0001550	4892.	31564858.	7.5279321	33.5034554	
0.0001602	5055.	31564858.	7.5234827	34.5995719	
0.0001653	5218.	31564858.	7.5193114	35.6956884	
0.0001705	5381.	31564858.	7.5153928	36.7918049	
0.0001757	5544.	31564858.	7.5117048	37.8879214	
0.0001808	5708.	31564858.	7.5082275	38.9840379	
0.0001860	5871.	31564858.	7.5049434	40.0801545	
0.0001912	6034.	31564858.	7.5018369	41.1762710	
0.0001963	6197.	31564858.	7.4988938	42.2723875	
0.0002015	6360.	31564858.	7.4961016	43.3685040	
0.0002118	6686.	31564858.	7.4909259	45.5607370	
0.0002222	7012.	31564858.	7.4862317	47.7529700	
0.0002325	7338.	31564858.	7.4819547	49.9452030	
0.0002428	7594.	31273474.	7.5134830	50.0000000	Y
0.0002531	7721.	30498406.	7.5837502	50.0000000	Y
0.0002635	7786.	29549312.	7.6386276	50.0000000	Y
0.0002738	7826.	28579933.	7.6478671	50.0000000	Y
0.0002841	7858.	27653579.	7.6477296	50.0000000	Y
0.0002945	7886.	26780982.	7.6478831	50.0000000	Y
0.0003048	7912.	25958193.	7.6475645	50.0000000	Y
0.0003151	7936.	25181210.	7.6477631	50.0000000	Y
0.0003255	7957.	24446985.	7.6479466	50.0000000	Y
0.0003358	7976.	23752213.	7.6480283	50.0000000	Y
0.0003461	7994.	23093916.	7.6479960	50.0000000	Y
0.0003565	8010.	22469613.	7.6480283	50.0000000	Y
0.0003668	8025.	21876798.	7.6480129	50.0000000	Y
0.0003771	8038.	21313249.	7.6478634	50.0000000	Y
0.0003875	8051.	20777078.	7.6476454	50.0000000	Y
0.0003978	8062.	20266360.	7.6475645	50.0000000	Y
0.0004081	8073.	19779323.	7.6478831	50.0000000	Y
0.0004185	8083.	19314541.	7.6479466	50.0000000	Y
0.0004288	8092.	18870540.	7.6474930	50.0000000	Y
0.0004391	8100.	18445857.	7.6478671	50.0000000	Y
0.0004495	8108.	18039485.	7.6478468	50.0000000	Y
0.0004598	8116.	17650234.	7.6475961	50.0000000	Y
0.0004701	8123.	17277090.	7.6480625	50.0000000	Y
0.0004805	8129.	16919050.	7.6474544	50.0000000	Y
0.0004908	8135.	16575264.	7.6481448	50.0000000	Y
0.0005011	8141.	16244881.	7.6474387	50.0000000	Y
0.0005115	8146.	15927183.	7.6480955	50.0000000	Y
0.0005218	8151.	15621440.	7.6475488	50.0000000	Y
0.0005321	8156.	15327042.	7.6479134	50.0000000	Y
0.0005425	8160.	15043359.	7.6477870	50.0000000	Y
0.0005528	8165.	14769868.	7.6475947	50.0000000	Y
0.0005631	8169.	14506020.	7.6481584	50.0000000	Y
0.0005735	8172.	14251235.	7.6475015	50.0000000	Y

0.0005838	8176.	14005136.	7.6478134	50.0000000	Y
0.0005941	8179.	13767321.	7.6480283	50.0000000	Y
0.0006045	8183.	13537359.	7.6474073	50.0000000	Y
0.0006148	8186.	13314800.	7.6478301	50.0000000	Y
0.0006561	8197.	12492701.	7.6482431	50.0000000	Y
0.0006974	8206.	11765298.	7.6482730	50.0000000	Y
0.0007388	8213.	11117290.	7.6482758	50.0000000	Y
0.0007801	8220.	10536418.	7.6478968	50.0000000	Y
0.0008214	8225.	10012932.	7.6472362	50.0000000	Y
0.0008628	8230.	9538641.	7.6478350	50.0000000	Y
0.0009041	8234.	9107072.	7.6480625	50.0000000	Y
0.0009454	8237.	8712685.	7.6473137	50.0000000	Y
0.0009868	8240.	8350897.	7.6483409	50.0000000	Y
0.0010281	8243.	8017824.	7.6472981	50.0000000	Y
0.0010694	8245.	7710210.	7.6480955	50.0000000	Y
0.0011108	8248.	7425247.	7.6477870	50.0000000	Y
0.0011521	8250.	7160555.	7.6473050	50.0000000	Y

Summary of Results for Nominal Moment Capacity for Section 1

Load No.	Axial Thrust kips	Nominal Moment Capacity in-kips
1	17.5290000000	8250.

Note that the values in the above table are not factored by a strength reduction factor for LRFD.

The value of the strength reduction factor depends on the provisions of the LRFD code being followed.

The above values should be multiplied by the appropriate strength reduction factor to compute ultimate moment capacity according to the LRFD structural design standard being followed.

Layering Correction Equivalent Depths of Soil & Rock Layers

Top of Layer	Equivalent Top Depth	Same Layer	Layer is	F0	F1

Layer No.	Below Pile Head ft	Below Grnd Surf ft	Type As Layer Above	Rock or is Below Rock Layer	Integral for Layer lbs	Integral for Layer lbs
1	-3.0000	0.00	N.A.	No	0.00	9865.
2	0.00	4.0458	Yes	No	9865.	112444.
3	8.0000	9.6085	Yes	No	122309.	203207.
4	12.0000	12.0621	No	No	325516.	167468.
5	16.0000	50.3356	Yes	No	492984.	31838.
6	19.0000	465.6831	No	No	524822.	3391.
7	22.0000	202.3509	No	No	528213.	1911452.
8	69.0000	72.0000	No	Yes	N.A.	N.A.

Notes: The F0 integral of Layer n+1 equals the sum of the F0 and F1 integrals for Layer n. Layering correction equivalent depths are computed only for soil types with both shallow-depth and deep-depth expressions for peak lateral load transfer. These soil types are soft and stiff clays, non-liquefied sands, and cemented c-phi soil.

Computed Values of Pile Loading and Deflection
for Lateral Loading for Load Case Number 1

Pile-head conditions are Displacement and Moment (Loading Type 4)
Displacement of pile head = -1.280000 inches
Moment at pile head = 5458766.0 in-lbs
Axial load at pile head = 17529.0 lbs

Depth X feet	Deflect. y inches	Bending Moment in-lbs	Shear Force lbs	Slope S radians	Total Stress psi*	Bending Stiffness lb-in^2	Soil Res. Es*H lb/inch	Soil Spr. Lat. Load lb/inch	Distrib. p lb/inch
0.00	-1.2800	5458766.	-131024.	0.00743	35895.	3.16E+10	549.6063	1958.	0.00
0.7600	-1.2050	4285365.	-126346.	0.00884	28312.	3.16E+10	476.2712	3605.	0.00
1.5200	-1.1187	3151381.	-121468.	0.00992	20984.	3.16E+10	593.5724	4839.	0.00
2.2800	-1.0241	2066620.	-115438.	0.01067	13975.	3.16E+10	728.7565	6490.	0.00
3.0400	-0.9241	1042378.	-108091.	0.01112	7356.	3.16E+10	882.4501	8709.	0.00

3.8000	-0.8213	91485.	-99274.	0.01128	1211.	3.16E+10	1051.	11672.	0.00
4.5600	-0.7183	-771982.	-88850.	0.01119	5609.	3.16E+10	1235.	15679.	0.00
5.3200	-0.6173	-1532707.	-76682.	0.01085	10524.	3.16E+10	1433.	21179.	0.00
6.0800	-0.5203	-2174130.	-63682.	0.01032	14669.	3.16E+10	1417.	24843.	0.00
6.8400	-0.4291	-2697560.	-51442.	0.00961	18052.	3.16E+10	1267.	26922.	0.00
7.6000	-0.3450	-3115504.	-40663.	0.00877	20752.	3.16E+10	1097.	29002.	0.00
8.3600	-0.2691	-3442052.	-26920.	0.00783	22863.	3.16E+10	1917.	64960.	0.00
9.1200	-0.2023	-3609018.	-9693.	0.00681	23942.	3.16E+10	1861.	83915.	0.00
9.8800	-0.1449	-3621024.	6736.	0.00576	24019.	3.16E+10	1742.	109596.	0.00
10.6400	-0.09716	-3487993.	21754.	0.00474	23160.	3.16E+10	1552.	145656.	0.00
11.4000	-0.05856	-3225741.	34694.	0.00377	21465.	3.16E+10	1286.	200270.	0.00
12.1600	-0.02847	-2856376.	45406.	0.00289	19078.	3.16E+10	1063.	340542.	0.00
12.9200	-0.00590	-2398458.	53656.	0.00213	16119.	3.16E+10	746.0747	1152386.	0.00
13.6800	0.01034	-1878374.	53105.	0.00151	12758.	3.16E+10	-866.9357	764529.	0.00
14.4400	0.02164	-1430310.	44398.	0.00103	9863.	3.16E+10	-1042.	439357.	0.00
15.2000	0.02917	-1068882.	34523.	6.71E-04	7527.	3.16E+10	-1123.	351199.	0.00
15.9600	0.03388	-800821.	24085.	4.01E-04	5795.	3.16E+10	-1166.	313886.	0.00
16.7200	0.03648	-629699.	17630.	1.94E-04	4689.	3.16E+10	-249.6812	62425.	0.00
17.4800	0.03742	-479316.	15345.	3.40E-05	3717.	3.16E+10	-251.2757	61242.	0.00
18.2400	0.03710	-349809.	13056.	-8.58E-05	2880.	3.16E+10	-250.7338	61640.	0.00
19.0000	0.03585	-241142.	10779.	-1.71E-04	2178.	3.16E+10	-248.6063	63236.	0.00
19.7600	0.03398	-153141.	8441.	-2.28E-04	1610.	3.16E+10	-264.1960	70917.	0.00
20.5200	0.03169	-87107.	6073.	-2.63E-04	1183.	3.16E+10	-255.1693	73426.	0.00
21.2800	0.02918	-42293.	3793.	-2.82E-04	893.2564	3.16E+10	-244.8503	76521.	0.00
22.0400	0.02656	-17842.	2508.	-2.90E-04	735.2530	3.16E+10	-36.8974	12670.	0.00

```
   22.8000    0.02389      3541.      2177.  -2.92E-04   642.8444   3.16E+10
-35.6172     13598.       0.00
   23.5600    0.02123     21962.      1859.  -2.89E-04   761.8772   3.16E+10
-34.2426     14711.       0.00
   24.3200    0.01862     37533.      1553.  -2.80E-04   862.4988   3.16E+10
-32.7818     16052.       0.00
   25.0800    0.01612     50376.      1261.  -2.67E-04   945.4898   3.16E+10
-31.2416     17674.       0.00
   25.8400    0.01375     60618.   983.3647  -2.51E-04      1012.   3.16E+10
-29.6282     19652.       0.00
   26.6000    0.01154     68393.   720.8255  -2.33E-04      1062.   3.16E+10
-27.9462     22090.       0.00
   27.3600    0.00951     73840.   473.9206  -2.12E-04      1097.   3.16E+10
-26.1996     25134.       0.00
   28.1200    0.00767     77105.   243.2298  -1.90E-04      1118.   3.16E+10
-24.3905     29002.       0.00
   28.8800    0.00604     78337.    29.3210  -1.68E-04      1126.   3.16E+10
-22.5193     34024.       0.00
   29.6400    0.00461     77693.  -167.2266  -1.45E-04      1122.   3.16E+10
-20.5832     40728.       0.00
   30.4000    0.00339     75333.  -345.7841  -1.23E-04      1107.   3.16E+10
-18.5741     50020.       0.00
   31.1600    0.00236     71425.  -505.6044  -1.02E-04      1082.   3.16E+10
-16.4741     63592.       0.00
   31.9200    0.00153     66144.  -645.6788  -8.21E-05      1047.   3.16E+10
-14.2439     85079.       0.00
   32.6800   8.65E-04     59674.  -764.3891  -6.39E-05      1006.   3.16E+10
-11.7890    124237.       0.00
   33.4400   3.61E-04     52222.  -858.3321  -4.77E-05   957.4198   3.16E+10
-8.8125    222511.       0.00
   34.2000  -5.42E-06     44034.  -895.7463  -3.38E-05   904.5083   3.16E+10
0.6076   1023356.       0.00
   34.9600  -2.56E-04     35894.  -857.1798  -2.23E-05   851.9101   3.16E+10
7.8500    279661.       0.00
   35.7200  -4.12E-04     28406.  -779.4247  -1.30E-05   803.5205   3.16E+10
9.2016    203690.       0.00
   36.4800  -4.93E-04     21682.  -692.9100  -5.77E-06   760.0680   3.16E+10
9.7709    180701.       0.00
   37.2400  -5.17E-04     15769.  -603.0841  -3.55E-07   721.8607   3.16E+10
9.9277    175076.       0.00
   38.0000  -5.00E-04     10682.  -513.0580   3.47E-06   688.9846   3.16E+10
9.8148    179160.       0.00
   38.7600  -4.54E-04      6410.  -424.9520   5.94E-06   661.3806   3.16E+10
9.5067    190999.       0.00
   39.5200  -3.91E-04      2929.  -340.3396   7.28E-06   638.8842   3.16E+10
9.0487    210865.       0.00
   40.2800  -3.21E-04  199.6830  -260.4475   7.74E-06   621.2505   3.16E+10
8.4715    240634.       0.00
   41.0400  -2.50E-04     -1825.  -186.2628   7.50E-06   631.7503   3.16E+10
7.7971    284150.       0.00
```

```
   41.8000  -1.84E-04     -3200.  -118.5995   6.78E-06   640.6396   3.16E+10
7.0414    348546.       0.00
   42.5600  -1.27E-04     -3990.   -58.1471   5.74E-06   645.7434   3.16E+10
6.2157    447530.       0.00
   43.3200  -7.96E-05     -4263.    -5.5185   4.54E-06   647.5051   3.16E+10
5.3256    610130.       0.00
   44.0800  -4.38E-05     -4092.    38.6714   3.34E-06   646.4032   3.16E+10
4.3652    909440.       0.00
   44.8400  -1.87E-05     -3558.    73.5922   2.23E-06   642.9539   3.16E+10
3.2929   1603625.       0.00
   45.6000  -3.06E-06     -2750.    90.1711   1.32E-06   637.7337   3.16E+10
0.3429   1023356.       0.00
   46.3600   5.37E-06     -1914.    88.9876   6.47E-07   632.3284   3.16E+10
-0.6024   1023356.       0.00
   47.1200   8.75E-06     -1128.    74.6343   2.08E-07   627.2463   3.16E+10
-2.5452   2653133.       0.00
   47.8800   9.16E-06  -552.7234    51.2336  -3.49E-08   623.5318   3.16E+10
-2.5865   2575619.       0.00
   48.6400   8.11E-06  -193.0205    28.1064  -1.43E-07   621.2074   3.16E+10
-2.4852   2794181.       0.00
   49.4000   6.56E-06   -40.0163    13.4192  -1.76E-07   620.2187   3.16E+10
-0.7357   1023356.       0.00
   50.1600   4.90E-06    51.8021     7.5599  -1.75E-07   620.2949   3.16E+10
-0.5493   1023356.       0.00
   50.9200   3.37E-06    97.9329     3.3307  -1.53E-07   620.5930   3.16E+10
-0.3782   1023356.       0.00
   51.6800   2.10E-06   112.6023     0.5295  -1.23E-07   620.6877   3.16E+10
-0.2361   1023356.       0.00
   52.4400   1.13E-06   107.6296    -1.1275  -9.08E-08   620.6556   3.16E+10
-0.1273   1023356.       0.00
   53.2000   4.48E-07    92.0657    -1.9372  -6.19E-08   620.5550   3.16E+10
-0.05028   1023356.       0.00
   53.9600   4.58E-09    72.3151    -2.1688  -3.82E-08   620.4274   3.16E+10
-5.14E-04   1023356.       0.00
   54.7200  -2.48E-07    52.5185    -2.0441  -2.02E-08   620.2995   3.16E+10
0.02788   1023356.       0.00
   55.4800  -3.63E-07    35.0380    -1.7312  -7.51E-09   620.1865   3.16E+10
0.04074   1023356.       0.00
   56.2400  -3.85E-07    20.9440    -1.3483   5.82E-10   620.0954   3.16E+10
0.04324   1023356.       0.00
   57.0000  -3.52E-07    10.4451    -0.9708   5.12E-09   620.0276   3.16E+10
0.03954   1023356.       0.00
   57.7600  -2.92E-07     3.2348    -0.6411   7.09E-09   619.9810   3.16E+10
0.03276   1023356.       0.00
   58.5200  -2.23E-07    -1.2505    -0.3776   7.38E-09   619.9682   3.16E+10
0.02503   1023356.       0.00
   59.2800  -1.57E-07    -3.6542    -0.1829   6.67E-09   619.9837   3.16E+10
0.01766   1023356.       0.00
   60.0400  -1.01E-07    -4.5890   -0.05053   5.48E-09   619.9898   3.16E+10
0.01137   1023356.       0.00
```

```
   60.8000  -5.74E-08    -4.5777    0.03070   4.16E-09   619.9897   3.16E+10
0.00644   1023356.       0.00
   61.5600  -2.55E-08    -4.0303    0.07315   2.91E-09   619.9861   3.16E+10
0.00287   1023356.       0.00
   62.3200  -4.29E-09    -3.2444    0.08841   1.86E-09   619.9811   3.16E+10
4.81E-04   1023356.       0.00
   63.0800   8.41E-09    -2.4183    0.08630   1.04E-09   619.9757   3.16E+10
-9.44E-04   1023356.       0.00
   63.8400   1.47E-08    -1.6706    0.07445   4.53E-10   619.9709   3.16E+10
-0.00165   1023356.       0.00
   64.6000   1.67E-08    -1.0604    0.05838   5.83E-11   619.9670   3.16E+10
-0.00187   1023356.       0.00
   65.3600   1.58E-08    -0.6058    0.04176  -1.82E-10   619.9640   3.16E+10
-0.00177   1023356.       0.00
   66.1200   1.33E-08    -0.2987    0.02684  -3.13E-10   619.9620   3.16E+10
-0.00150   1023356.       0.00
   66.8800   1.01E-08    -0.1162    0.01484  -3.73E-10   619.9609   3.16E+10
-0.00113   1023356.       0.00
   67.6400   6.54E-09   -0.02789    0.00633  -3.94E-10   619.9603   3.16E+10
-7.34E-04   1023356.       0.00
   68.4000   2.91E-09  -6.37E-04    0.00149  -3.98E-10   619.9601   3.16E+10
-3.27E-04   1023356.       0.00
   69.1600  -7.17E-10  -5.74E-04       0.00  -3.98E-10   619.9601   3.16E+10
0.00       0.00       0.00
   69.9200  -4.35E-09  -5.10E-04       0.00  -3.98E-10   619.9601   3.16E+10
0.00       0.00       0.00
   70.6800  -7.98E-09  -4.46E-04       0.00  -3.98E-10   619.9601   3.16E+10
0.00       0.00       0.00
   71.4400  -1.16E-08  -3.83E-04       0.00  -3.99E-10   619.9601   3.16E+10
0.00       0.00       0.00
   72.2000  -1.53E-08  -3.19E-04       0.00  -3.99E-10   619.9601   3.16E+10
0.00       0.00       0.00
   72.9600  -1.89E-08  -2.55E-04       0.00  -3.99E-10   619.9601   3.16E+10
0.00       0.00       0.00
   73.7200  -2.25E-08  -1.91E-04       0.00  -3.99E-10   619.9601   3.16E+10
0.00       0.00       0.00
   74.4800  -2.62E-08  -1.28E-04       0.00  -3.99E-10   619.9601   3.16E+10
0.00       0.00       0.00
   75.2400  -2.98E-08  -6.38E-05       0.00  -3.99E-10   619.9601   3.16E+10
0.00       0.00       0.00
   76.0000  -3.34E-08       0.00       0.00  -3.99E-10   619.9601   3.16E+10
0.00       0.00       0.00

* This analysis computed pile response using nonlinear moment-curvature rela-
  tionships. Values of total stress due to combined axial and bending stresses
  are computed only for elastic sections only and do not equal the actual
  stresses in concrete and steel. Stresses in concrete and steel may be inter-
  polated from the output for nonlinear bending properties relative to the
  magnitude of bending moment developed in the pile.
```

```
Output Summary for Load Case No. 1:

Pile-head deflection             =    -1.28000000 inches
Computed slope at pile head      =     0.00743453 radians
Maximum bending moment           =       5458766. inch-lbs
Maximum shear force              =       -131024. lbs
Depth of maximum bending moment  =       0.000000 feet below pile head
Depth of maximum shear force     =       0.000000 feet below pile head
Number of iterations             =             23
Number of zero deflection points =              6


--------------------------------------------------------------------------------
            Summary of Pile-head Responses for Conventional Analyses
--------------------------------------------------------------------------------

Definitions of Pile-head Loading Conditions:

Load Type 1: Load 1 = Shear, V, lbs, and Load 2 = Moment, M, in-lbs
Load Type 2: Load 1 = Shear, V, lbs, and Load 2 = Slope, S, radians
Load Type 3: Load 1 = Shear, V, lbs, and Load 2 = Rot. Stiffness, R, in-lbs/rad.
Load Type 4: Load 1 = Top Deflection, y, inches, and Load 2 = Moment, M, in-lbs
Load Type 5: Load 1 = Top Deflection, y, inches, and Load 2 = Moment, M, in-lbs


Load Load                Load                  Axial    Pile-head  Pile-head  Max
Shear Max Moment
Case Type   Pile-head    Type     Pile-head   Loading  Deflection  Rotation    in
Pile    in Pile
 No.  1      Load 1       2        Load 2       lbs      inches     radians      lbs
     in-lbs
---- ----- ---------- ---------- ---------- ---------- ---------- ----------
---------- ----------
  1  y, in    -1.2800  M, in-lb    5458766.     17529.    -1.2800    0.00743
-131024.   5458766.


Maximum pile-head deflection = -1.2800000000 inches
Maximum pile-head rotation   = 0.0074345285 radians = 0.425967 deg.

--------------------------------------------------------------------------------
                           Summary of Warning Messages
--------------------------------------------------------------------------------

The following warning was reported 230 times

**** Warning - Possible Input Data Error ****

The input value for k_rm used by the weak rock criteria is greater than
```

0.0005. This value is outside the recommended range of 0.00005 to 0.0005.
Please check your input data for accuracy.

The following warning was reported 230 times

**** Warning ****

An unreasonable input value for unconfined compressive strength has been specified for a soil defined using the weak rock criteria. The input value is greater than 500 psi. Please check your input data for correctness.

The analysis ended normally.

GEOTECHNICAL DESIGN
END ABUTMENT

Geotechnical Design

The proposed foundation consists of installation of piles in 30" diameter augured holes extending in to a sound rock. Loose sand shall be placed in the annular place around the pile. The loose sand shall extend to a depth of 8 ft.

H Pile Section: ***HP14X117***

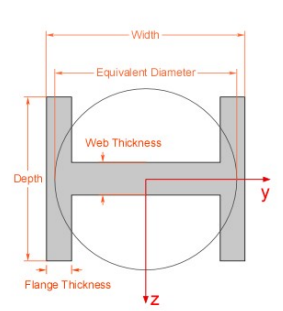

$b_s := 14.2 \cdot in$ (Width)

$d_s := 14.9 \cdot in$ (Depth)

$t_{fs} := 0.805 \cdot in$ (Flange thickness)

$t_{ws} := 0.805 \cdot in$ (Web thickness)

Subtract 1/16" all around these dimensions to account for corrosion.

$b'_s := b_s - 2 \cdot \left(\frac{1}{16}\right) \cdot in$ $\quad b'_s = 14.08\ in$

$d'_s := d_s - 2 \cdot \left(\frac{1}{16}\right) \cdot in$ $\quad d'_s = 14.78\ in$

$t'_{fs} := t_{fs} - 2 \cdot \left(\frac{1}{16}\right) \cdot in$ $\quad t'_{fs} = 0.68\ in$

$t'_{ws} := t_{ws} - 2 \cdot \left(\frac{1}{16}\right) \cdot in$ $\quad t'_{ws} = 0.68\ in$

$S' := 4.5\ ft$ (Spacing of Piles)

$S_{min} := 3 \cdot b_s = 3.55\ ft$ (Minimum Pile Spacing, NYSDOT GDM Sec. 11.9.2.1)

$Check_1 :=$ if $S' \geq S_{min}$ "Pile Spacing is OKAY" else "Pile Spacing is NOT OKAY"

$Check_1 =$ "Pile Spacing is OKAY"

$P_{pile} := 167.8\ kip$ Maximum Pile Axial load

$q_u := 15000\ psi$ (Ultimate bearing stress on rock (based on rock test result on DN-B-1))

Using Hard-Bite Point Model *HP-77750-B* Pile shoe:

$A' := 1.0\ in - 2 \cdot \frac{1}{16}\ in = 0.88\ in$

$B' := 1.625\ in - 2 \cdot \frac{1}{16}\ in = 1.5\ in$

$A_{pile_shoe} := 2 \cdot b'_s \cdot A' + \left(d'_s - 2 \cdot A'\right) \cdot B' = 44.17\ in^2$ (Bearing area of pile shoe)

$\varphi := 0.5$ (Resistance factor for Geotech capacity in Rock (AASHTO Table 10.5.5.2.4-1))

Factored pile capacity:

$Q_\varphi := \varphi \cdot (q_u \cdot A_{pile_shoe}) = 331\ kip$

$Check := \left\| \begin{array}{l} \text{if } Q_\varphi > P_{pile} \\ \quad \text{"Okay"} \\ \text{else} \\ \quad \text{"Not Okay"} \end{array} \right. = \text{"Okay"}$

$\frac{P_{pile}}{Q_\varphi} = 51\%$

Deflection of Pile

Deflections have been obtained from First analysis (using GROUP program).

$\Delta_x := 0.0588 \cdot in$ (Max vertical displacement of pile under Service load condition)

$\Delta_y := 1.07 \cdot in$ (Max horizontal displacement of pile in y-direction under Service load condition)

$\Delta_z := 0 \cdot in$ (Max horizontal displacement of pile in z-direction under Service load condition)

$\delta_v := 1 \cdot in$ (Max. allowable vertical displacement of pile, NYSDOT GDM 11.9.2.6.2)

$\delta_H := 0.5 \cdot in$ (Max. allowable horizontal displacement of pile, NYSDOT GDM 11.9.2.6.2)

$Check_{deflection} := \left\| \begin{array}{l} \text{if } (\Delta_x \le \delta_v) \wedge \left(\sqrt{\Delta_y^2 + \Delta_z^2} \le \delta_H\right) \\ \quad \text{"Deflection of pile is within the tolerable limit"} \\ \text{else} \\ \quad \text{"Deflection of pile exceeds the tolerable limit"} \end{array} \right. = \text{"Deflection of pile exceeds the tolerable limit"}$

Although the pile top deflection of 1.07 inches exceeds the 0.5-inch limit in the NYSDOT GDM, this is acceptable for integral abutment design, which inherently provides a flexible foundation system intended to accommodate thermal movements. The simplified method conservatively applies the full thermal displacement without considering the stiffness of the abutment and backfill, which significantly restrain actual movement. Therefore, the real pile deflection will be substantially less than 1.07 inches, ensuring performance remains within acceptable limits.

ANALYSIS GRAPHS
END ABUTMENT

Analysis - 1 (in GROUP)
Pile Head Fixed

Temperature displacement and Live load & superimposed dead load rotation were applied to the pile in the model.

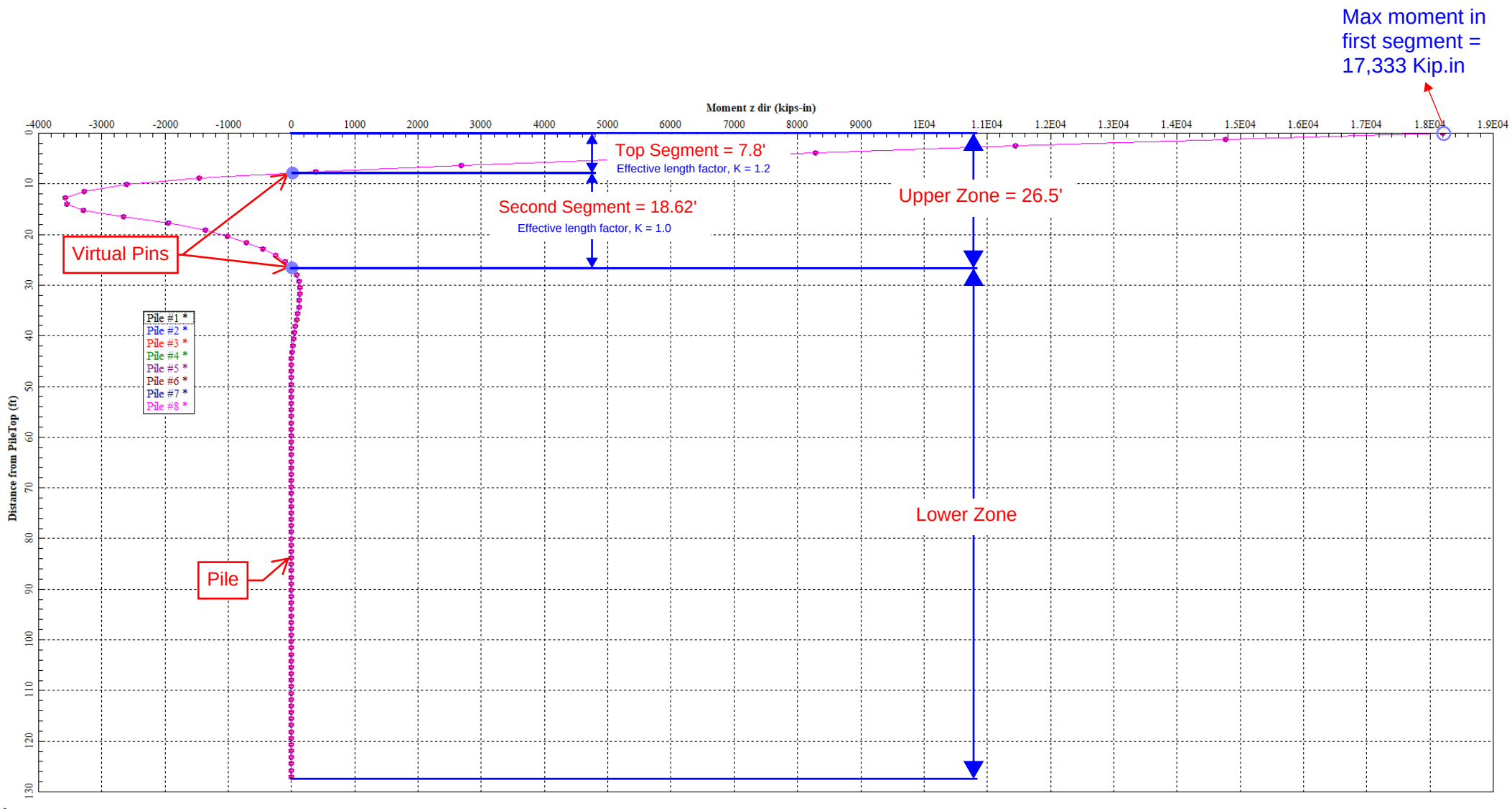

Analysis - 1 (in GROUP)
Pile Head Fixed

Temperature displacement and Live load & superimposed dead load rotation were applied to the pile in the model.

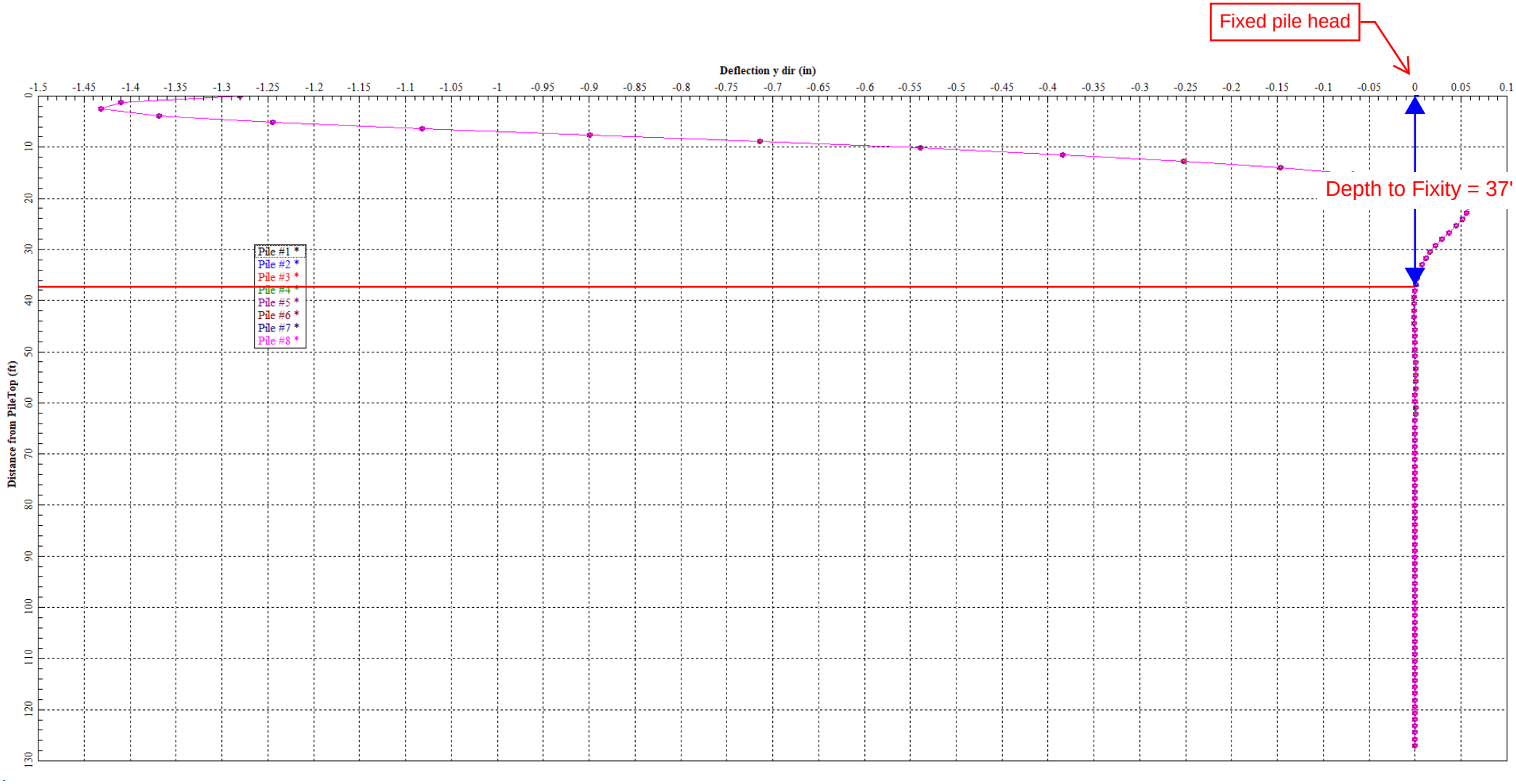

Analysis - 2 (in LPILE)
Pile Head Pinned

Temperature displacement and a moment equal to plastic moment capacity were applied to the pile in the model.

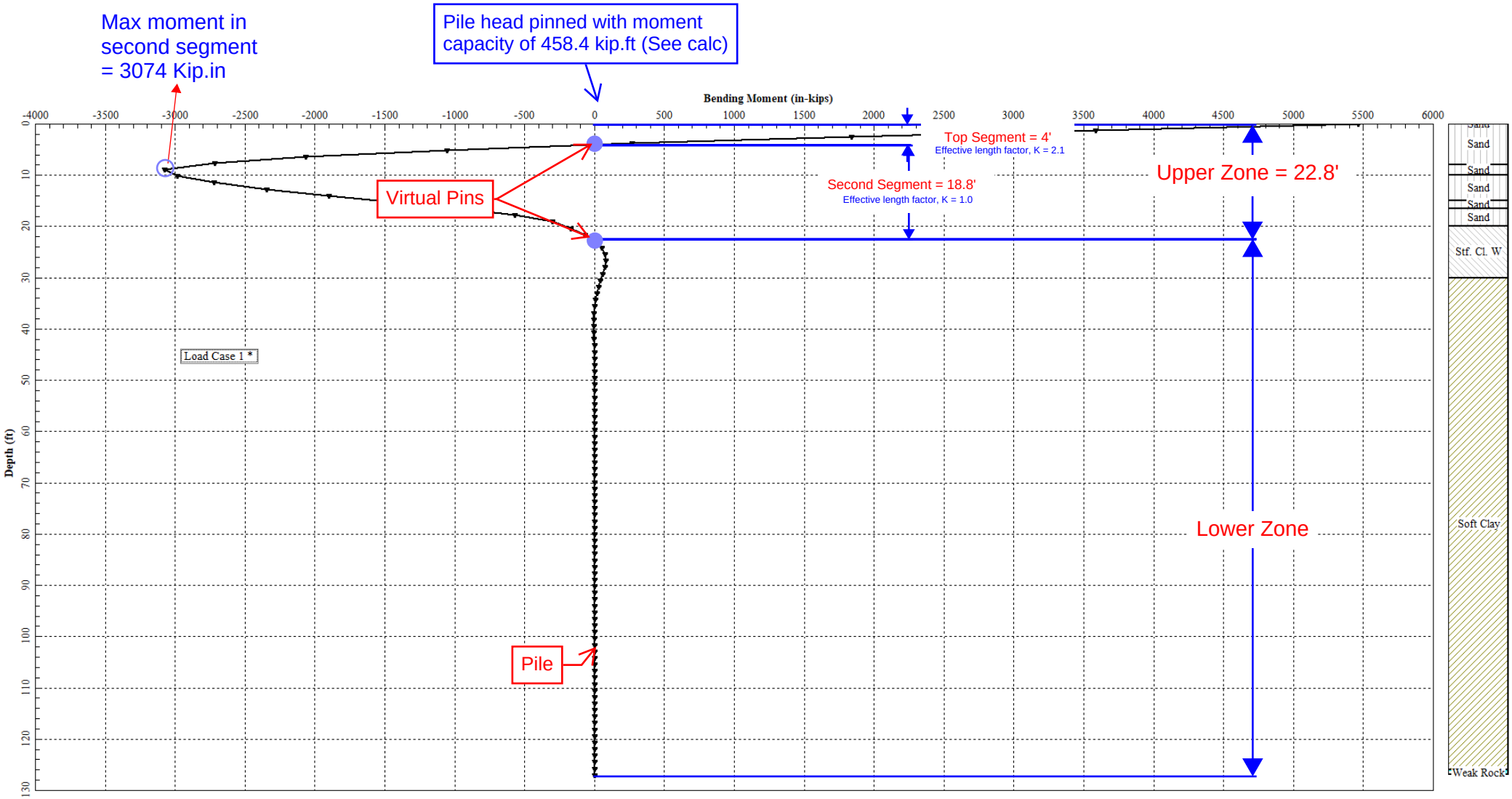

Analysis - 2 (in LPILE)
Pile Head Pinned

Temperature displacement and a moment equal to plastic moment capacity were applied to the pile in the model.

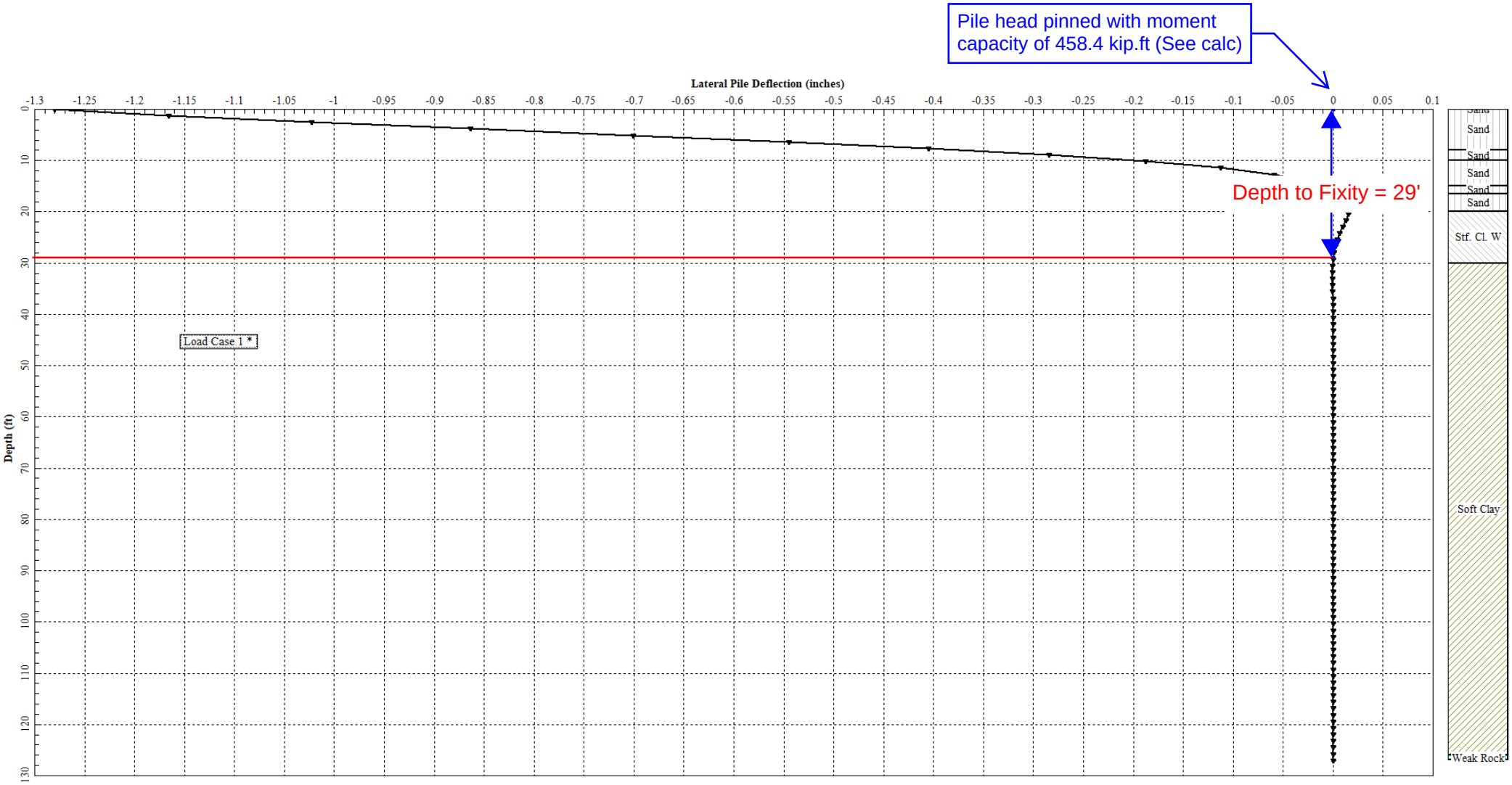

PILE STRUCTURAL DESIGN
END ABUTMENT

PILE STRUCTURAL DESIGN
END ABUTMENT

FIRST SEGMENT (FIRST ANALYSIS)

Top Segment - First Analysis
(Fixed Pile Head Condition)

References:

1. AASHTO LRFD Bridge Design Specifications, 19th Edition, 2020
2. NYSDOT LRFD Bridge Design Specifications - 2021
3. NYSDOT Geotechnical Design Manual
4. NYSDOT Bridge Manual - 2021
5. VTrans, Integral Abutment Bridge Design Guidelines

H Pile Section: ***HP14X117***

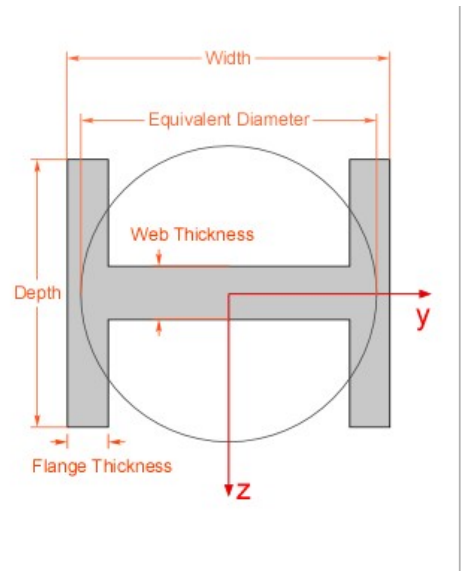

$b_s := 14.2 \cdot in$ (Width)

$d_s := 14.9 \cdot in$ (Depth)

$t_{fs} := 0.805 \cdot in$ (Flange thickness)

$t_{ws} := 0.805 \cdot in$ (Web thickness)

$E := 29000\ ksi$ (Steel Modulus of Elasticity)

$F_y := 50\ ksi$ (Yield Strength of Pile)

Subtract 1/16" all around these dimensions to account for corrosion.

$b'_s := b_s - 2 \cdot \left(\frac{1}{16}\right) \cdot in$ $\quad b'_s = 14.08\ in$

$d'_s := d_s - 2 \cdot \left(\frac{1}{16}\right) \cdot in$ $\quad d'_s = 14.78\ in$

$t'_{fs} := t_{fs} - 2 \cdot \left(\frac{1}{16}\right) \cdot in$ $\quad t'_{fs} = 0.68\ in$

$t'_{ws} := t_{ws} - 2 \cdot \left(\frac{1}{16}\right) \cdot in$ $\quad t'_{ws} = 0.68\ in$

$L_b := 7.8 \cdot ft$ (Unbraced length for top segment (Distance from bottom of pile cap to first point of zero moment, from GROUP Analysis)

$K_e := 1.2$ (Effective length factor, AASHTO Table C4.6.2.5-1)

Pile Applied loads

$P_{vertical} := 146.8\ kip$ (Pile vertical load due to superstructure loads (From GROUP))

$P_{earth_pressure} := 21\ kip$ (Additional pile load due to earth pressure, See Additional Load calculations)

$P_u := P_{vertical} + P_{earth_pressure} = 167.8\ kip$ (Factored Axial load on a single pile (From GROUP))

$M_{uy} := 0\ kip \cdot ft$ (Factored applied moment about pile weak axis)

$M_{uz} := 17333\ kip \cdot in = 1444.42\ kip \cdot ft$ (Factored applied moment about pile strong axis) (From GROUP)

Section Properties:

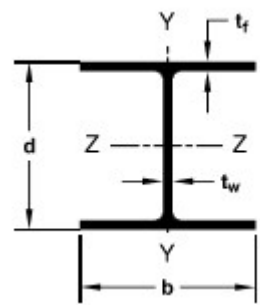

$b := d'_s$ (Width of flange)

$d := b'_s$ (Depth of section) $d = 14.08\ in$

$t_f := t'_{fs}$ (Thickness of flange) $t_f = 0.68\ in$

$t_w := t'_{ws}$ (Thickness of web) $t_w = 0.68\ in$

$h_w := d - 2 \cdot t_f$ (Height of web) $h_w = 12.72\ in$

$A_s := 2 \cdot t_f \cdot b + t_w \cdot h_w$ (Area of section) $A_s = 28.74\ in^2$

$I_y := \frac{t_f \cdot b^3}{6} + \frac{h_w \cdot t_w^3}{12}$ (Moment of inertia about y axis) $I_y = 365.88\ in^4$

$S_y := \frac{I_y}{\left(\frac{b}{2}\right)}$ (Elastic Section modulus about y axis) $S_y = 49.53\ in^3$

$Z_y := \frac{t_f \cdot b^2}{2} + \frac{h_w \cdot t_w^2}{4}$ (Plastic section modulus about y axis) $Z_y = 75.69\ in^3$

$r_y := \sqrt{\frac{I_y}{A_s}}$ (Radius of gyration about y axis) $r_y = 3.57\ in$

$I_z := \frac{b \cdot d^3}{12} - \frac{(b - t_w) \cdot h_w^3}{12}$ (Moment of inertia about z axis) $I_z = 1018.61\ in^4$

$S_z := \frac{I_z}{\left(\frac{d}{2}\right)}$ (Elastic section modulus about z axis) $S_z = 144.74\ in^3$

$Z_z := \frac{b \cdot d^2}{4} - \frac{(b - t_w) \cdot h_w^2}{4}$ (Plastic section modulus about z axis) $Z_z = 162.06\ in^3$

$r_z := \sqrt{\frac{I_z}{A_s}}$ (Radius of gyration about z axis) $r_z = 5.95\ in$

$\lambda := \frac{K_e \cdot L_b}{min(r_z, r_y)}$ (slenderness ratio of pile section) $\lambda = 31$

$\lambda_{limit} := 120$ (Limiting slenderness ratio, AASHTO Sec. 6.9.3)

```
Check4 := | if λ < λlimit
          |   "Good. Slenderness ratio within the limit"
          | else
          |   "Not Good. Slenderness ratio outside the limit"
```

$Check_4 =$ "Good. Slenderness ratio within the limit"

Axial Capacity of Pile Section

Check slenderness of section in compression (AASHTO Sec. 6.9.4.2.1)

$\lambda_{rf} := 0.56 \cdot \sqrt{\frac{E}{F_y}}$ (Limiting slenderness ratio of flange) $\lambda_{rf} = 13.49$

$\lambda_{rw} := 1.49 \cdot \sqrt{\frac{E}{F_y}}$ (Limiting slenderness ratio of web) $\lambda_{rw} = 35.88$

$\lambda_f := \frac{\left(\frac{b}{2}\right)}{t_f}$ (Slenderness ratio of flange) $\lambda_f = 10.86$

$\lambda_w := \frac{h_w}{t_w}$ (slenderness ratio of web) $\lambda_w = 18.7$

```
Slenderness := | if λf < λrf ∧ λw < λrw
               |   "Non-slender section. Local buckling effects can be neglected"
               | else
               |   "Slender section. Local buckling effects needs to be considered"
```

$Slenderness =$ "Non-slender section. Local buckling effects can be neglected"

Elastic critical buckling resistance based on flexural buckling (AASHTO Sec. 6.9.4.1.2)

$P_{ef} := \frac{\pi^2 \cdot E}{(\lambda)^2} \cdot A_s$ $P_{ef} = 8301\ kip$

Elastic critical buckling resistance based on torsional buckling (AASHTO Sec. 6.9.4.1.3)

$J_s := \frac{2 \cdot b \cdot t_f^3 + (d - t_f) \cdot t_w^3}{3}$ (St. Venant Constant) $J_s = 4.5\ in^4$

$C_w := \frac{I_y \cdot d^2}{4}$ (Warping torsional constant, AASHTO C6.9.4.1.3) $C_w = 18121\ in^6$

$KL := K_e \cdot L_b$ (Effective length for torsional buckling) $KL = 9.36\ ft$

$G' := 0.385 \cdot E$ (Shear modulus, AASHTO Sec. 6.9.4.1.3) $G' = 11165\ ksi$

$P_{eft} := \left(\frac{\pi^2 \cdot E \cdot C_w}{(KL)^2} + G' \cdot J_s \right) \cdot \frac{A_s}{I_y + I_z}$ $P_{eft} = 9577\ kip$

$P_e := min(P_{ef}, P_{eft})$ (Controlling Pe) $P_e = 8301\ kip$

Nominal Yield resistance (AASHTO Sec 6.9.4.1.1)

$P_o := F_y \cdot A_s$ $P_o = 1437\ kip$

Nominal Compressive resistance (AASHTO Sec. 6.9.4.1.1)

$$P_n := \begin{cases} \left(0.658^{\left(\frac{P_o}{P_e}\right)}\right) \cdot P_o & \text{if } \frac{P_o}{P_e} \le 2.25 \\ 0.877 \cdot P_e & \text{else} \end{cases}$$

$P_n = 1337\ kip$

$\phi_c := 0.6$ (Resistance factor for pile in compression, AASHTO 6.5.4.2)

$P_r := \phi_c \cdot P_n = 801.94\ kip$ (Factored axial capacity of pile in compression)

Flexural Capacity of Pile about strong axis (AASHTO 6.10.8)

The flexural capacity of the pile about the strong axis is the minimum of capacities obtained by the following three criteria

1. Compression flange local buckling
2. Compression flange lateral torsional buckling
3. Tension flange Yielding

1. Compression flange local buckling (AASHTO 6.10.8.2.2)

$\lambda_f = 10.86$

$F_{yr} := 0.7 \cdot F_y = 35$ ***ksi***

$\lambda_{pf} := 0.38 \cdot \sqrt{\frac{E}{F_y}}$ $\lambda_{pf} = 9.15$

$\lambda_{rf} := 0.56 \cdot \sqrt{\frac{E}{F_{yr}}} = 16.12$

$R_b := 1$ (Web load shedding factor, taken as 1.0)

$R_h := 1$ (Hybrid factor, taken as 1.0)

$$F_{nc_1} := \begin{cases} R_b \cdot R_h \cdot F_y & \text{if } \lambda_f \le \lambda_{pf} \\ \left(1 - \left(1 - \frac{F_{yr}}{R_h \cdot F_y}\right) \cdot \left(\frac{\lambda_f - \lambda_{pf}}{\lambda_{rf} - \lambda_{pf}}\right)\right) \cdot R_b \cdot R_h \cdot F_y & \text{else} \end{cases}$$

$F_{nc_1} = 46$ *ksi*

2. <u>Compression flange lateral-torsional buckling (AASHTO 6.10.8.2.3)</u>

To find the depth of web in compression Dc, calculate the total compressive and tensile stresses due to axial load and bending.

$f_c := \frac{P_u}{A_s} + \frac{M_{uz}}{S_z}$ $f_c = 125.59$ ***ksi***

$f_t := -\left(\frac{P_u}{A_s}\right) + \frac{M_{uz}}{S_z}$ $f_t = 113.91$ ***ksi***

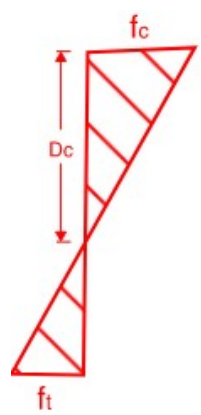

$$D_c := \begin{cases} h_w & \text{if } f_t < 0 \\ \frac{f_c}{f_c + f_t} \cdot d - t_f & \text{else} \end{cases}$$

$D_c = 6.7$ ***in***

$r_t := \frac{b}{\sqrt{12 \cdot \left(1 + \frac{1}{3} \cdot \frac{D_c \cdot t_w}{b \cdot t_f}\right)}}$ (Effective radius of gyration for lateral-torsional buckling) $r_t = 3.98$ ***in***

$C_b := 1.0$ (Moment gradient modifier, taken as 1.0 for simplicity)

$F_{cr} := \frac{C_b \cdot R_b \cdot \pi^2 \cdot E}{\left(\frac{L_b}{r_t}\right)^2}$ (Elastic lateral-torsional buckling stress) $F_{cr} = 516$ ***ksi***

$L_p := r_t \cdot \sqrt{\frac{E}{F_y}}$ $\qquad L_p = 96\ in$

$L_r := \pi \cdot r_t \cdot \sqrt{\frac{E}{F_{yr}}}$ $\qquad L_r = 359\ in$

$$F_{nc_2} := \begin{cases} R_b \cdot R_h \cdot F_y & \text{if } L_b \le L_p \\ min\left(C_b \cdot \left(1 - \left(1 - \frac{F_{yr}}{R_h \cdot F_y}\right) \cdot \left(\frac{L_b - L_p}{L_r - L_p}\right)\right) \cdot R_b \cdot R_h \cdot F_y, R_b \cdot R_h \cdot F_y\right) & \text{also if } L_p < L_b \le L_r \\ min\left(F_{cr}, R_b \cdot R_h \cdot F_y\right) & \text{else} \end{cases}$$

$F_{nc_2} = 50\ ksi$

3. Tension flange Yielding (AASHTO 6.10.8.3)

$F_{nt} := R_h \cdot F_y$ $\qquad F_{nt} = 50\ ksi$

Nominal moment capacity of the pile section about strong axis:

$M_{nz} := S_z \cdot min\left(F_{nc_1}, F_{nc_2}, F_{nt}\right)$ $\qquad M_{nz} = 559\ kip \cdot ft$

Flexural Capacity of Pile about weak axis (AASHTO 6.12.2.2-1)

$\lambda_{rf} := 0.83 \cdot \sqrt{\frac{E}{F_y}} = 19.99$ $\qquad \lambda_{pf} = 9.15$

$$M_{ny} := \begin{cases} F_y \cdot Z_y & \text{if } \lambda_f \le \lambda_{pf} \\ \left(1 - \left(1 - \frac{S_y}{Z_y}\right) \cdot \left(\frac{\lambda_f - \lambda_{pf}}{0.45 \cdot \sqrt{\frac{E}{F_y}}}\right)\right) \cdot F_y \cdot Z_y & \text{else if } \lambda_{pf} < \lambda_f \le \lambda_{rf} \end{cases} = 298.16\ kip \cdot ft$$

Combined Axial and Flexure (AASHTO 6.9.2.2.1)

The resistance factors for combined axial resistance and flexure resistance (AASHTO 6.5.4.2)

$\phi_f := 1.0$

$\phi_a := 0.7$

$M_{ry} := \phi_f \cdot M_{ny} = 298.16\ kip \cdot ft$

$M_{rz} := \phi_f \cdot M_{nz} = 558.62\ kip \cdot ft$

$P_r := \phi_a \cdot P_n$ $\qquad P_r = 936\ kip$

Check compactness of section (AASHTO A6.2.1 and A6.3.2)

Check for compactness ensures that the section is able to develop the full plastic moment.

$D_{cp} := \frac{h_w}{2} = 6.36\ in$ (Depth of web in compression at the plastic moment)

$M_y := F_y \cdot S_z = 603.1\ kip \cdot ft$ (Yield moment)

$Y' := \frac{h_w}{2} = 6.36\ in$ (Depth of plastic neutral axis, Table D6.1.1)

$M_p := F_y \cdot Z_z = 675.3\ kip \cdot ft$ (Plastic Moment)

$$a_{wc} := \frac{2 \cdot D_c \cdot t_w}{b \cdot t_f} = 0.91$$

$$\lambda_{rw} := min\left(\max\left(4.6 \cdot \sqrt{\frac{E}{F_y}}, \left(3.1 + \frac{5}{a_{wc}}\right) \cdot \sqrt{\frac{E}{F_y}}\right), 5.7 \cdot \sqrt{\frac{E}{F_y}}\right) = 137.27$$ (Equation A6.2.1-3)

Limiting Slenderness ratio for compact web:

$$\lambda_{pw_Dcp} := min\left(\left(\frac{\sqrt{\frac{E}{F_y}}}{0.54 \cdot \frac{M_p}{R_h \cdot M_y} - 0.09}\right), \lambda_{rw} \cdot \frac{D_{cp}}{D_c}\right) = 46.8$$ (Equation A6.2.1-2)

$$Compact_{web} := \left\| \begin{array}{l} \text{if } \frac{2 \cdot D_c}{t_w} < \lambda_{pw_Dcp} \\ \quad \text{"Compact Web"} \\ \text{else} \\ \quad \text{"Non Compact Web"} \end{array} \right\| = \text{"Compact Web"}$$

$$Compact_{flange} := \left\| \begin{array}{l} \text{if } \lambda_f < 0.38 \cdot \sqrt{\frac{E}{F_y}} \\ \quad \text{"Compact Flange"} \\ \text{else} \\ \quad \text{"Non Compact Flange"} \end{array} \right\| = \text{"Non Compact Flange"}$$

$$Compact_{Section} := \left\| \begin{array}{l} \text{if } Compact_{web} = \text{"Compact Web"} \wedge Compact_{flange} = \text{"Compact Flange"} \\ \quad \text{"Compact Section"} \\ \text{else} \\ \quad \text{"Non Compact Section"} \end{array} \right\| = \text{"Non Compact Section"}$$

Plastic Moment Capacity of the pile about strong axis:

$$M_{pz} := \left\| \begin{array}{l} \text{if } Compact_{Section} = \text{“Compact Section”} \\ \quad \left\| \begin{array}{l} \text{if } \dfrac{P_u}{P_r} < 0.2 \\ \quad \left\| \left(1 - \dfrac{P_u}{2 \cdot P_r} - \dfrac{M_{uy}}{M_{ry}}\right) \cdot M_{rz} \right. \\ \text{else} \\ \quad \left\| \left(\dfrac{9}{8} \cdot \left(1 - \dfrac{P_u}{P_r}\right) - \dfrac{M_{uy}}{M_{ry}}\right) \cdot M_{rz} \right. \end{array} \right. \\ \text{else} \\ \quad \left\| \left(1 - \dfrac{P_u}{P_r} - \dfrac{M_{uy}}{M_{ry}}\right) \cdot M_{rz} \right. \end{array} \right. = 458.4 \ kip \cdot ft$$

(AASHTO Eq. 6.9.2.2.1)

(Moment required to form plastic hinge in pile)

$$M_{pz} = 5501188.53 \ lbf \cdot in$$

$$Plastic_Hinge := \left\| \begin{array}{l} \text{if } M_{uz} > M_{pz} \\ \quad \left\| \text{“Plastic hinge forms at the pile head”} \right. \\ \text{else} \\ \quad \left\| \text{“Plastic hinge does not form”} \right. \end{array} \right. = \text{“Plastic hinge forms at the pile head”}$$

The bending moment along pile strong axis from GROUP analysis exceeds the plastic moment capacity of pile, resulting in plastic hinge formation just below the pile cap. The hinge moment capacity is equal to plastic moment capacity of the pile. Therefore, after the formation of the plastic hinge, the maximum moment that can be applied to the pile is equal to its plastic moment capacity.

A Second analysis will be performed in LPILE for a single pile with pinned head condition and a moment equal to the plastic moment capacity will be applied at the top of the pile along with the temperature displacement.

PILE STRUCTURAL DESIGN
END ABUTMENT

FIRST SEGMENT (SECOND ANALYSIS)

Top Segment - Second Analysis
(Pinned Pile Head Condition)

References:

1. AASHTO LRFD Bridge Design Specifications, 19th Edition, 2020
2. NYSDOT LRFD Bridge Design Specifications - 2021
3. NYSDOT Geotechnical Design Manual
4. NYSDOT Bridge Manual - 2021
5. VTrans, Integral Abutment Bridge Design Guidelines

H Pile Section: ***HP14X117***

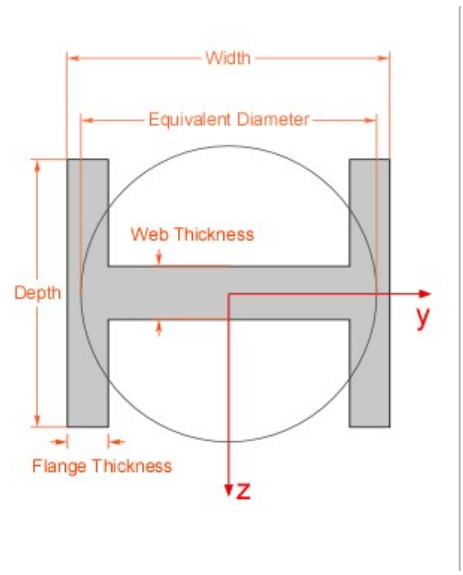

$b_s := 14.2 \cdot in$ (Width)

$d_s := 14.9 \cdot in$ (Depth)

$t_{fs} := 0.805 \cdot in$ (Flange thickness)

$t_{ws} := 0.805 \cdot in$ (Web thickness)

$E := 29000\ ksi$ (Steel Modulus of Elasticity)

$F_y := 50\ ksi$ (Yield Strength of Pile)

Subtract 1/16" all around these dimensions to account for corrosion.

$b'_s := b_s - 2 \cdot \left(\frac{1}{16}\right) \cdot in$ $\quad b'_s = 14.08\ in$

$d'_s := d_s - 2 \cdot \left(\frac{1}{16}\right) \cdot in$ $\quad d'_s = 14.78\ in$

$t'_{fs} := t_{fs} - 2 \cdot \left(\frac{1}{16}\right) \cdot in$ $\quad t'_{fs} = 0.68\ in$

$t'_{ws} := t_{ws} - 2 \cdot \left(\frac{1}{16}\right) \cdot in$ $\quad t'_{ws} = 0.68\ in$

$L_b := 4 \cdot ft$ (Unbraced length for first segment (Distance from bottom of pile cap to first point of zero moment, from LPILE Analysis)

$K_e := 2.1$ (Effective length factor, AASHTO Table C4.6.2.5-1)

Pile Applied loads

$P_{vertical} := 146.8\ kip$ (Pile vertical load due to superstructure loads (From GROUP))

$P_{earth_pressure} := 21\ kip$ (Additional pile load due to earth pressure, See Additional Load calculations)

$P_u := P_{vertical} + P_{earth_pressure} = 167.8\ kip$ (Factored Axial load on a single pile (From GROUP))

$V_u := 127.6\ kip$ (Factored maximum applied shear in pile (From LPILE))

Section Properties:

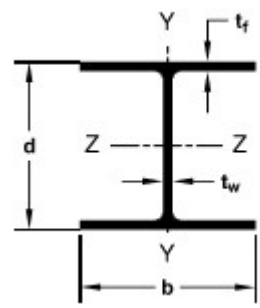

$b := d'_s$ (Width of flange)

$d := b'_s$ (Depth of section) $d = 14.08\ in$

$t_f := t'_{fs}$ (Thickness of flange) $t_f = 0.68\ in$

$t_w := t'_{ws}$ (Thickness of web) $t_w = 0.68\ in$

$h_w := d - 2 \cdot t_f$ (Height of web) $h_w = 12.72\ in$

$A_s := 2 \cdot t_f \cdot b + t_w \cdot h_w$ (Area of section) $A_s = 28.74\ in^2$

$I_y := \frac{t_f \cdot b^3}{6} + \frac{h_w \cdot t_w^3}{12}$ (Moment of inertia about y axis) $I_y = 365.88\ in^4$

$S_y := \frac{I_y}{\left(\frac{b}{2}\right)}$ (Elastic Section modulus about y axis) $S_y = 49.53\ in^3$

$Z_y := \frac{t_f \cdot b^2}{2} + \frac{h_w \cdot t_w^2}{4}$ (Plastic section modulus about y axis) $Z_y = 75.69\ in^3$

$r_y := \sqrt{\frac{I_y}{A_s}}$ (Radius of gyration about y axis) $r_y = 3.57\ in$

$I_z := \frac{b \cdot d^3}{12} - \frac{(b - t_w) \cdot h_w^3}{12}$ (Moment of inertia about z axis) $I_z = 1018.61\ in^4$

$S_z := \frac{I_z}{\left(\frac{d}{2}\right)}$ (Elastic section modulus about z axis) $S_z = 144.74\ in^3$

$Z_z := \frac{b \cdot d^2}{4} - \frac{(b - t_w) \cdot h_w^2}{4}$ (Plastic section modulus about z axis) $Z_z = 162.06\ in^3$

$r_z := \sqrt{\frac{I_z}{A_s}}$ (Radius of gyration about z axis) $r_z = 5.95\ in$

$\lambda := \frac{K_e \cdot L_b}{min(r_y, r_z)}$ (slenderness ratio of pile section) $\lambda = 28$

$\lambda_{limit} := 120$ (Limiting slenderness ratio, AASHTO Sec. 6.9.3)

```
Check4 := | if λ < λlimit
          |   "Good. Slenderness ratio within the limit"
          | else
          |   "Not Good. Slenderness ratio outside the limit"
```

$Check_4 =$ "Good. Slenderness ratio within the limit"

Axial Capacity of Pile Section

Check slenderness of section in compression (AASHTO Sec. 6.9.4.2.1)

$\lambda_{rf} := 0.56 \cdot \sqrt{\frac{E}{F_y}}$ (Limiting slenderness ratio of flange) $\lambda_{rf} = 13.49$

$\lambda_{rw} := 1.49 \cdot \sqrt{\frac{E}{F_y}}$ (Limiting slenderness ratio of web) $\lambda_{rw} = 35.88$

$\lambda_f := \frac{\left(\frac{b}{2}\right)}{t_f}$ (Slenderness ratio of flange) $\lambda_f = 10.86$

$\lambda_w := \frac{h_w}{t_w}$ (slenderness ratio of web) $\lambda_w = 18.7$

```
Slenderness := | if λf < λrf ∧ λw < λrw
               |   "Non-slender section. Local buckling effects can be neglected"
               | else
               |   "Slender section. Local buckling effects needs to be considered"
```

$Slenderness =$ "Non-slender section. Local buckling effects can be neglected"

Elastic critical buckling resistance based on flexural buckling (AASHTO Sec. 6.9.4.1.2)

$P_{ef} := \frac{\pi^2 \cdot E}{(\lambda)^2} \cdot A_s$ $P_{ef} = 10307\ kip$

Elastic critical buckling resistance based on torsional buckling (AASHTO Sec. 6.9.4.1.3)

$J_s := \frac{2 \cdot b \cdot t_f^3 + (d - t_f) \cdot t_w^3}{3}$ (St. Venant Constant) $J_s = 4.5\ in^4$

$C_w := \frac{I_y \cdot d^2}{4}$ (Warping torsional constant, AASHTO C6.9.4.1.3) $C_w = 18121\ in^6$

$KL := K_e \cdot L_b$ (Effective length for torsional buckling) $KL = 8.4\ ft$

$G' := 0.385 \cdot E$ (Shear modulus, AASHTO Sec. 6.9.4.1.3) $G' = 11165\ ksi$

$P_{eft} := \left(\frac{\pi^2 \cdot E \cdot C_w}{(KL)^2} + G' \cdot J_s \right) \cdot \frac{A_s}{I_y + I_z}$ $P_{eft} = 11639\ kip$

$P_e := min(P_{ef}, P_{eft})$ (Controlling Pe) $P_e = 10307\ kip$

Nominal Yield resistance (AASHTO Sec 6.9.4.1.1)

$P_o := F_y \cdot A_s$ $P_o = 1437\ kip$

Nominal Compressive resistance (AASHTO Sec. 6.9.4.1.1)

$$P_n := \begin{cases} \left(0.658^{\left(\frac{P_o}{P_e}\right)}\right) \cdot P_o & \text{if } \frac{P_o}{P_e} \le 2.25 \\ 0.877 \cdot P_e & \text{else} \end{cases}$$

$P_n = 1356\ kip$

$\phi_c := 0.6$ (Resistance factor for pile in compression, AASHTO 6.5.4.2)

$P_r := \phi_c \cdot P_n = 813.33\ kip$ (Factored axial capacity of pile in compression)

Demand Capacity ratio for Axial Strength of Pile:

$DC_a := \frac{P_u}{P_r}$ $DC_a = 0.21$

$$Check_7 := \begin{cases} \text{“Good. Axial capacity of the section is sufficient”} & \text{if } DC_a < 1 \\ \text{“Good. Axial capacity of the section is not sufficient”} & \text{else} \end{cases}$$

$Check_7 =$ "Good. Axial capacity of the section is sufficient"

Shear Capacity of Pile (AASHTO 6.10.9.2)

$V_p := 0.58 \cdot F_y \cdot h_w \cdot t_w$ $\qquad V_p = 251\ kip$

$K' := 5$

$$C' := \begin{cases} 1.0 & \text{if } \dfrac{h_w}{t_w} \le 1.12 \cdot \sqrt{\dfrac{E \cdot K'}{F_y}} \\ \dfrac{1.12}{\left(\dfrac{h_w}{t_w}\right)} \cdot \sqrt{\dfrac{E \cdot K'}{F_y}} & \text{also if } 1.12 \cdot \sqrt{\dfrac{E \cdot K'}{F_y}} < \dfrac{h_w}{t_w} \le 1.40 \cdot \sqrt{\dfrac{E \cdot K'}{F_y}} \\ \dfrac{1.57}{\left(\dfrac{h_w}{t_w}\right)^2} \cdot \left(\dfrac{E \cdot K'}{F_y}\right) & \text{else} \end{cases}$$

$C' = 1$

Nominal shear capacity:

$V_n := C' \cdot V_p$ $\qquad V_n = 251\ kip$

$\phi_v := 1.0$ (Resistance factor for shear, AASHTO Sec. 6.5.4.2)

$V_r := \phi_v \cdot V_n$ $\qquad V_r = 251\ kip$

Demand Capacity ratio for Shear Strength of Pile:

$DC_v := \dfrac{V_u}{V_r}$ $\qquad DC_v = 0.51$

$$Check_8 := \begin{cases} \text{"Good. Shear capacity of the section is sufficient"} & \text{if } DC_v < 1 \\ \text{"Not Good. Shear capacity of the section isn't sufficient"} & \text{else} \end{cases}$$

$Check_8 =$ "Good. Shear capacity of the section is sufficient"

PILE STRUCTURAL DESIGN
END ABUTMENT

SECOND SEGMENT (SECOND ANALYSIS)

Second Segment - Second Analysis
(Pinned Pile Head Condition)

References:

1. AASHTO LRFD Bridge Design Specifications, 19th Edition, 2020
2. NYSDOT LRFD Bridge Design Specifications - 2021
3. NYSDOT Geotechnical Design Manual
4. NYSDOT Bridge Manual - 2021
5. VTrans, Integral Abutment Bridge Design Guidelines

H Pile Section: ***HP14X117***

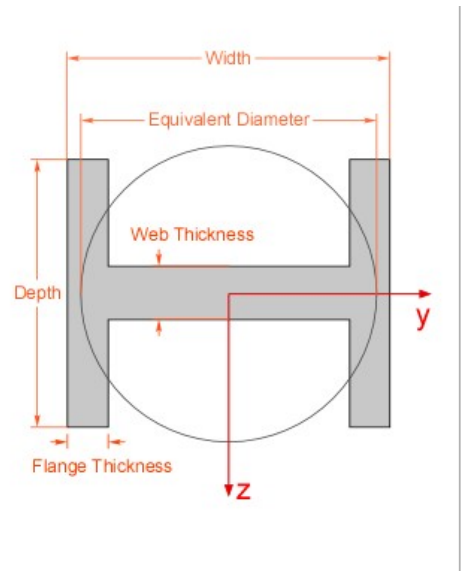

$b_s := 14.2 \cdot in$ (Width)

$d_s := 14.9 \cdot in$ (Depth)

$t_{fs} := 0.805 \cdot in$ (Flange thickness)

$t_{ws} := 0.805 \cdot in$ (Web thickness)

$E := 29000\ ksi$ (Steel Modulus of Elasticity)

$F_y := 50\ ksi$ (Yield Strength of Pile)

Subtract 1/16" all around these dimensions to account for corrosion.

$b'_s := b_s - 2 \cdot \left(\frac{1}{16}\right) \cdot in$ $\quad b'_s = 14.08\ in$

$d'_s := d_s - 2 \cdot \left(\frac{1}{16}\right) \cdot in$ $\quad d'_s = 14.78\ in$

$t'_{fs} := t_{fs} - 2 \cdot \left(\frac{1}{16}\right) \cdot in$ $\quad t'_{fs} = 0.68\ in$

$t'_{ws} := t_{ws} - 2 \cdot \left(\frac{1}{16}\right) \cdot in$ $\quad t'_{ws} = 0.68\ in$

$L_b := 18.8 \cdot ft$ (Unbraced length for second segment (Distance between first point and second point of zero moment, from LPILE Analysis)

$K_e := 1.0$ (Effective length factor, AASHTO Table C4.6.2.5-1)

Pile Applied loads

$P_{vertical} := 146.8\ kip$ (Pile vertical load due to superstructure loads (From GROUP))

$P_{earth_pressure} := 21\ kip$ (Additional pile load due to earth pressure, See Additional Load calculations)

$P_u := P_{vertical} + P_{earth_pressure} = 167.8\ kip$ (Factored Axial load on a single pile (From GROUP))

$M_{uy} := 0\ kip \cdot ft$ (Factored applied moment about pile weak axis) (From LPILE))

$M_{uz} := 3074\ kip \cdot in = 256.17\ kip \cdot ft$ (Factored applied moment about pile strong axis) (From LPILE))

$V_u := 127.6\ kip$ (Factored maximum applied shear in pile (From LPILE))

Section Properties:

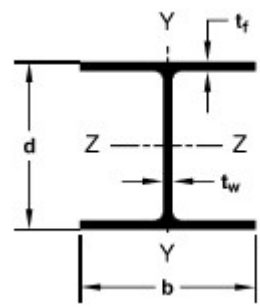

$b := d'_s$ (Width of flange)

$d := b'_s$ (Depth of section) $d = 14.08\ in$

$t_f := t'_{fs}$ (Thickness of flange) $t_f = 0.68\ in$

$t_w := t'_{ws}$ (Thickness of web) $t_w = 0.68\ in$

$h_w := d - 2 \cdot t_f$ (Height of web) $h_w = 12.72\ in$

$A_s := 2 \cdot t_f \cdot b + t_w \cdot h_w$ (Area of section) $A_s = 28.74\ in^2$

$I_y := \frac{t_f \cdot b^3}{6} + \frac{h_w \cdot t_w^{\ 3}}{12}$ (Moment of inertia about y axis) $I_y = 365.88\ in^4$

$S_y := \frac{I_y}{\left(\frac{b}{2}\right)}$ (Elastic Section modulus about y axis) $S_y = 49.53\ in^3$

$Z_y := \frac{t_f \cdot b^2}{2} + \frac{h_w \cdot t_w^{\ 2}}{4}$ (Plastic section modulus about y axis) $Z_y = 75.69\ in^3$

$r_y := \sqrt{\frac{I_y}{A_s}}$ (Radius of gyration about y axis) $r_y = 3.57\ in$

$I_z := \frac{b \cdot d^3}{12} - \frac{(b - t_w) \cdot h_w^{\ 3}}{12}$ (Moment of inertia about z axis) $I_z = 1018.61\ in^4$

$S_z := \frac{I_z}{\left(\frac{d}{2}\right)}$ (Elastic section modulus about z axis) $S_z = 144.74\ in^3$

$Z_z := \frac{b \cdot d^2}{4} - \frac{(b - t_w) \cdot h_w^{\ 2}}{4}$ (Plastic section modulus about z axis) $Z_z = 162.06\ in^3$

$r_z := \sqrt{\frac{I_z}{A_s}}$ (Radius of gyration about z axis) $r_z = 5.95\ in$

$\lambda := \frac{K_e \cdot L_b}{min(r_z, r_y)}$ (slenderness ratio of pile section) $\lambda = 63$

$\lambda_{limit} := 120$ (Limiting slenderness ratio, AASHTO Sec. 6.9.3)

$Check_4 :=$ if $\lambda < \lambda_{limit}$ "Good. Slenderness ratio within the limit" else "Not Good. Slenderness ratio outside the limit"

$Check_4 =$ "Good. Slenderness ratio within the limit"

Axial Capacity of Pile Section

Check slenderness of section in compression (AASHTO Sec. 6.9.4.2.1)

$\lambda_{rf} := 0.56 \cdot \sqrt{\frac{E}{F_y}}$ (Limiting slenderness ratio of flange) $\lambda_{rf} = 13.49$

$\lambda_{rw} := 1.49 \cdot \sqrt{\frac{E}{F_y}}$ (Limiting slenderness ratio of web) $\lambda_{rw} = 35.88$

$\lambda_f := \frac{\left(\frac{b}{2}\right)}{t_f}$ (Slenderness ratio of flange) $\lambda_f = 10.86$

$\lambda_w := \frac{h_w}{t_w}$ (slenderness ratio of web) $\lambda_w = 18.7$

$Slenderness :=$ if $\lambda_f < \lambda_{rf} \wedge \lambda_w < \lambda_{rw}$ "Non-slender section. Local buckling effects can be neglected" else "Slender section. Local buckling effects needs to be considered"

$Slenderness =$ "Non-slender section. Local buckling effects can be neglected"

Elastic critical buckling resistance based on flexural buckling (AASHTO Sec. 6.9.4.1.2)

$P_{ef} := \frac{\pi^2 \cdot E}{(\lambda)^2} \cdot A_s$ $P_{ef} = 2058\ kip$

Elastic critical buckling resistance based on torsional buckling (AASHTO Sec. 6.9.4.1.3)

$J_s := \frac{2 \cdot b \cdot t_f^3 + (d - t_f) \cdot t_w^3}{3}$ (St. Venant Constant) $J_s = 4.5\ in^4$

$C_w := \frac{I_y \cdot d^2}{4}$ (Warping torsional constant, AASHTO C6.9.4.1.3) $C_w = 18121\ in^6$

$KL := K_e \cdot L_b$ (Effective length for torsional buckling) $KL = 18.8\ ft$

$G' := 0.385 \cdot E$ (Shear modulus, AASHTO Sec. 6.9.4.1.3) $G' = 11165\ ksi$

$P_{eft} := \left(\frac{\pi^2 \cdot E \cdot C_w}{(KL)^2} + G' \cdot J_s \right) \cdot \frac{A_s}{I_y + I_z}$ $P_{eft} = 3159\ kip$

$P_e := min(P_{ef}, P_{eft})$ (Controlling Pe) $P_e = 2058\ kip$

Nominal Yield resistance (AASHTO Sec 6.9.4.1.1)

$P_o := F_y \cdot A_s$ $P_o = 1437\ kip$

Nominal Compressive resistance (AASHTO Sec. 6.9.4.1.1)

$$P_n := \begin{cases} \left(0.658^{\left(\frac{P_o}{P_e}\right)}\right) \cdot P_o & \text{if } \frac{P_o}{P_e} \le 2.25 \\ 0.877 \cdot P_e & \text{else} \end{cases}$$

$P_n = 1073\ kip$

$\phi_c := 0.6$ (Resistance factor for pile in compression, AASHTO 6.5.4.2)

$P_r := \phi_c \cdot P_n = 643.67\ kip$ (Factored axial capacity of pile in compression)

Flexural Capacity of Pile about strong axis (AASHTO 6.10.8)

The flexural capacity of the pile about the strong axis is the minimum of capacities obtained by the following three criteria

1. Compression flange local buckling
2. Compression flange lateral torsional buckling
3. Tension flange Yielding

1. Compression flange local buckling (AASHTO 6.10.8.2.2)

$\lambda_f = 10.86$

$F_{yr} := 0.7 \cdot F_y$ $\qquad F_{yr} = 35\ ksi$

$\lambda_{pf} := 0.38 \cdot \sqrt{\frac{E}{F_y}}$ $\qquad \lambda_{pf} = 9.15$

$\lambda_{rf} := 0.56 \cdot \sqrt{\frac{E}{F_{yr}}} = 16.12$

$R_b := 1$ (Web load shedding factor, taken as 1.0)

$R_h := 1$ (Hybrid factor, taken as 1.0)

$$F_{nc_1} := \begin{cases} R_b \cdot R_h \cdot F_y & \text{if } \lambda_f \le \lambda_{pf} \\ \left(1 - \left(1 - \frac{F_{yr}}{R_h \cdot F_y}\right) \cdot \left(\frac{\lambda_f - \lambda_{pf}}{\lambda_{rf} - \lambda_{pf}}\right)\right) \cdot R_b \cdot R_h \cdot F_y & \text{else} \end{cases}$$

$F_{nc_1} = 46\ ksi$

2. <u>Compression flange lateral-torsional buckling (AASHTO 6.10.8.2.3)</u>

To find the depth of web in compression Dc, calculate the total compressive and tensile stresses due to axial load and bending.

$f_c := \frac{P_u}{A_s} + \frac{M_{uz}}{S_z}$ $\qquad f_c = 27.08\ ksi$

$f_t := -\left(\frac{P_u}{A_s}\right) + \frac{M_{uz}}{S_z}$ $\qquad f_t = 15.4\ ksi$

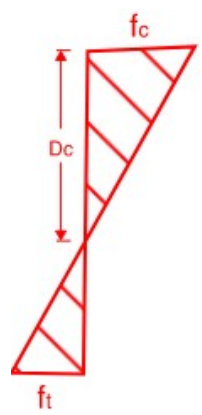

$$D_c := \begin{cases} h_w & \text{if } f_t < 0 \\ \frac{f_c}{f_c + f_t} \cdot d - t_f & \text{else} \end{cases}$$

$D_c = 8.29\ in$

$r_t := \frac{b}{\sqrt{12 \cdot \left(1 + \frac{1}{3} \cdot \frac{D_c \cdot t_w}{b \cdot t_f}\right)}}$ (Effective radius of gyration for lateral-torsional buckling) $\qquad r_t = 3.91\ in$

$C_b := 1.0$ (Moment gradient modifier, taken as 1.0 for simplicity)

$$F_{cr} := \frac{C_b \cdot R_b \cdot \pi^2 \cdot E}{\left(\frac{L_b}{r_t}\right)^2}$$ (Elastic lateral-torsional buckling stress) $F_{cr} = 86\ ksi$

$$L_p := r_t \cdot \sqrt{\frac{E}{F_y}}$$ $L_p = 94\ in$

$$L_r := \pi \cdot r_t \cdot \sqrt{\frac{E}{F_{yr}}}$$ $L_r = 354\ in$

$$F_{nc_2} := \begin{cases} R_b \cdot R_h \cdot F_y & \text{if } L_b \le L_p \\ \min\left(C_b \cdot \left(1 - \left(1 - \frac{F_{yr}}{R_h \cdot F_y}\right) \cdot \left(\frac{L_b - L_p}{L_r - L_p}\right)\right) \cdot R_b \cdot R_h \cdot F_y, R_b \cdot R_h \cdot F_y\right) & \text{also if } L_p < L_b \le L_r \\ \min\left(F_{cr}, R_b \cdot R_h \cdot F_y\right) & \text{else} \end{cases}$$ $F_{nc_2} = 42\ ksi$

3. Tension flange Yielding (AASHTO 6.10.8.3)

$$F_{nt} := R_h \cdot F_y$$ $F_{nt} = 50\ ksi$

Nominal moment capacity of the pile section about strong axis:

$$M_{nz} := S_z \cdot \min\left(F_{nc_1}, F_{nc_2}, F_{nt}\right)$$ $M_{nz} = 512\ kip \cdot ft$

Flexural Capacity of Pile about weak axis (AASHTO 6.12.2.2-1)

$$\lambda_{rf} := 0.83 \cdot \sqrt{\frac{E}{F_y}} = 19.99 \qquad \lambda_{pf} = 9.15$$

$$M_{ny} := \begin{cases} F_y \cdot Z_y & \text{if } \lambda_f \le \lambda_{pf} \\ \left(1 - \left(1 - \frac{S_y}{Z_y}\right) \cdot \left(\frac{\lambda_f - \lambda_{pf}}{0.45 \cdot \sqrt{\frac{E}{F_y}}}\right)\right) \cdot F_y \cdot Z_y & \text{else if } \lambda_{pf} < \lambda_f \le \lambda_{rf} \end{cases} = 298.16\ kip \cdot ft$$

Shear Capacity of Pile (AASHTO 6.10.9.2)

$V_p := 0.58 \cdot F_y \cdot h_w \cdot t_w$ $\qquad V_p = 251\ kip$

$K' := 5$

$$C' := \begin{cases} 1.0 & \text{if } \dfrac{h_w}{t_w} \le 1.12 \cdot \sqrt{\dfrac{E \cdot K'}{F_y}} \\ \dfrac{1.12}{\left(\dfrac{h_w}{t_w}\right)} \cdot \sqrt{\dfrac{E \cdot K'}{F_y}} & \text{also if } 1.12 \cdot \sqrt{\dfrac{E \cdot K'}{F_y}} < \dfrac{h_w}{t_w} \le 1.40 \cdot \sqrt{\dfrac{E \cdot K'}{F_y}} \\ \dfrac{1.57}{\left(\dfrac{h_w}{t_w}\right)^2} \cdot \left(\dfrac{E \cdot K'}{F_y}\right) & \text{else} \end{cases}$$

$C' = 1$

Nominal shear capacity:

$V_n := C' \cdot V_p$ $\qquad V_n = 251\ kip$

$\phi_v := 1.0$ (Resistance factor for shear, AASHTO Sec. 6.5.4.2)

$V_r := \phi_v \cdot V_n$ $\qquad V_r = 251\ kip$

Demand Capacity ratio for Shear Strength of Pile:

$DC_v := \dfrac{V_u}{V_r}$ $\qquad DC_v = 0.51$

$$Check_7 := \begin{cases} \text{“Good. Shear capacity of the section is sufficient”} & \text{if } DC_v < 1 \\ \text{“Not Good. Shear capacity of the section isn't sufficient”} & \text{else} \end{cases}$$

$Check_7 =$ “Good. Shear capacity of the section is sufficient”

Interaction with flexural Shear: (AASHTO 6.9.2.2)

$\dfrac{P_u}{P_r} = 0.26$

$$Shear_{Interaction} := \begin{cases} \text{if } \dfrac{P_u}{P_r} > 0.05 \\ \quad \text{"Interaction with flexural shear needs to be considered"} \\ \text{else} \\ \quad \text{"Interaction with flexural shear does not need to be considered"} \end{cases}$$

$Shear_{Interaction} =$ "Interaction with flexural shear needs to be considered"

Per AASHTO 6.9.2.2.2, for I-Section members, the cross section shear stresses due to torque shall be neglected and value of Δz shall be taken equal to 1.0 in all cases and only flexural shear stresses in the web shall be considered in the calculation of Δ.

$\Delta'_z := 1.0$

Maximum Shear stress in web:

$$Q := (b \cdot t_f) \cdot \left(\frac{h_w}{2} + \frac{t_f}{2}\right) + \left(\frac{h_w}{2} \cdot t_w\right) \cdot \left(\frac{h_w}{4}\right)$$ (Moment of area about N/A)

$$f_{ve} := \frac{V_u \cdot Q}{I_z \cdot t_w}$$ $f_{ve} = 14.93$ ***ksi***

Nominal Shear resistance of web: (AASHTO 6.11.8.2)

$k_s := 5.34$ (Plate-buckling coefficient for shear stress)

$\lambda_w = 18.7$ (Slenderness ratio of web)

$$F_{cv} := \begin{cases} \text{if } \lambda_w \le 1.12 \cdot \sqrt{\dfrac{E \cdot k_s}{F_y}} \\ \quad 0.58 \cdot F_y \\ \text{also if } 1.12 \cdot \sqrt{\dfrac{E \cdot k_s}{F_y}} < \lambda_w \le 1.40 \cdot \sqrt{\dfrac{E \cdot k_s}{F_y}} \\ \quad \dfrac{0.65 \cdot \sqrt{F_y \cdot E \cdot k_s}}{\lambda_w} \\ \text{also if } \lambda_w > 1.40 \cdot \sqrt{\dfrac{E \cdot k_s}{F_y}} \\ \quad \dfrac{0.9 \cdot E \cdot k_s}{\lambda_w^{\,2}} \\ \text{else} \\ \quad \text{"ERROR"} \end{cases}$$

$F_{cv} = 29$ *ksi*

$\phi_T := 1.0$ (Resistance factor for torsion, AASHTO 6.5.4.2)

$$\Delta := \begin{cases} \max\left(1-\left(\dfrac{f_{ve}}{\phi_T \cdot F_{cv}}\right)^2, 0\right) & \text{if } \dfrac{P_u}{P_r} > 0.05 \\ 1.0 & \text{else} \end{cases}$$

(Axial resistance modifier, AASHTO Eq. 6.9.2.2.2-1) $\Delta = 0.74$

Combined Axial and Flexure (AASHTO 6.9.2.2.1)

The resistance factors for combined axial resistance and flexure resistance (AASHTO 6.5.4.2)

$\phi_f := 1.0$

$\phi_a := 0.7$

$M_{ry} := \phi_f \cdot M_{ny} = 298.16\ kip \cdot ft$

$M_{rz} := \phi_f \cdot M_{nz} = 511.61\ kip \cdot ft$

$P_r := \phi_a \cdot P_n$

$P_r = 751\ kip$

Check compactness of section (AASHTO A6.2.1 and A6.3.2)

Check for compactness ensures that the section is able to develop the full plastic moment.

$D_{cp} := \dfrac{h_w}{2} = 6.36\ in$ (Depth of web in compression at the plastic moment)

$M_y := F_y \cdot S_z = 603.1\ kip \cdot ft$ (Yield moment)

$Y' := \dfrac{h_w}{2} = 6.36\ in$ (Depth of plastic neutral axis, Table D6.1.1)

$M_p := F_y \cdot Z_z = 675.3\ kip \cdot ft$ (Plastic Moment)

$$a_{wc} := \frac{2 \cdot D_c \cdot t_w}{b \cdot t_f} = 1.12$$

$$\lambda_{rw} := min\left(\max\left(4.6 \cdot \sqrt{\frac{E}{F_y}}, \left(3.1 + \frac{5}{a_{wc}}\right) \cdot \sqrt{\frac{E}{F_y}}\right), 5.7 \cdot \sqrt{\frac{E}{F_y}}\right) = 137.27$$

(Equation A6.2.1-3)

Limiting Slenderness ratio for compact web:

$$\lambda_{pw_Dcp} := min\left(\left(\frac{\sqrt{\dfrac{E}{F_y}}}{0.54 \cdot \dfrac{M_p}{R_h \cdot M_y} - 0.09}\right), \lambda_{rw} \cdot \frac{D_{cp}}{D_c}\right) = 46.8$$

(Equation A6.2.1-2)

$$Compact_{web} := \begin{cases} \text{“Compact Web”} & \text{if } \dfrac{2 \cdot D_c}{t_w} < \lambda_{pw_Dcp} \\ \text{“Non Compact Web”} & \text{else} \end{cases} = \text{“Compact Web”}$$

$$Compact_{flange} := \left\| \begin{array}{l} \text{if } \lambda_f < 0.38 \cdot \sqrt{\dfrac{E}{F_y}} \\ \quad \text{"Compact Flange"} \\ \text{else} \\ \quad \text{"Non Compact Flange"} \end{array} \right. = \text{"Non Compact Flange"}$$

$$Compact_{Section} := \left\| \begin{array}{l} \text{if } Compact_{web} = \text{"Compact Web"} \wedge Compact_{flange} = \text{"Compact Flange"} \\ \quad \text{"Compact Section"} \\ \text{else} \\ \quad \text{"Non Compact Section"} \end{array} \right. = \text{"Non Compact Section"}$$

Interaction between axial load and bending moment in pile:

$$Interaction_ratio := \left\| \begin{array}{l} \text{if } Compact_{Section} = \text{"Compact Section"} \\ \quad \left\| \begin{array}{l} \text{if } \dfrac{P_u}{P_r} < 0.2 \\ \quad \left\| \left(\dfrac{P_u}{2 \cdot \Delta \cdot P_r}\right) + \dfrac{M_{uy}}{\Delta'_z \cdot M_{ry}} + \dfrac{M_{uz}}{\Delta'_z \cdot M_{rz}} \right. \\ \text{else} \\ \quad \left\| \left(\dfrac{P_u}{\Delta \cdot P_r}\right) + \dfrac{8}{9} \cdot \left(\dfrac{M_{uy}}{\Delta'_z \cdot M_{ry}} + \dfrac{M_{uz}}{\Delta'_z \cdot M_{rz}}\right) \right. \end{array} \right. \\ \text{else} \\ \quad \left\| \left(\dfrac{P_u}{\Delta \cdot P_r} + \dfrac{M_{uy}}{\Delta'_z \cdot M_{ry}} + \dfrac{M_{uz}}{\Delta'_z \cdot M_{rz}}\right) \right. \end{array} \right. = 0.805$$

(AASHTO Section. 6.9.2.2.1)

$$Interaction := \left\| \begin{array}{l} \text{if } Interaction_ratio < 1.0 \\ \quad \text{"Okay"} \\ \text{else} \\ \quad \text{"Not Okay"} \end{array} \right. = \text{"Okay"}$$

PILE STRUCTURAL DESIGN
END ABUTMENT

LOWER ZONE

Lower Zone

References:

1. AASHTO LRFD Bridge Design Specifications, 19th Edition, 2020
2. NYSDOT LRFD Bridge Design Specifications - 2021
3. NYSDOT Geotechnical Design Manual
4. NYSDOT Bridge Manual - 2021
5. VTrans, Integral Abutment Bridge Design Guidelines

H Pile Section: ***HP14x117***

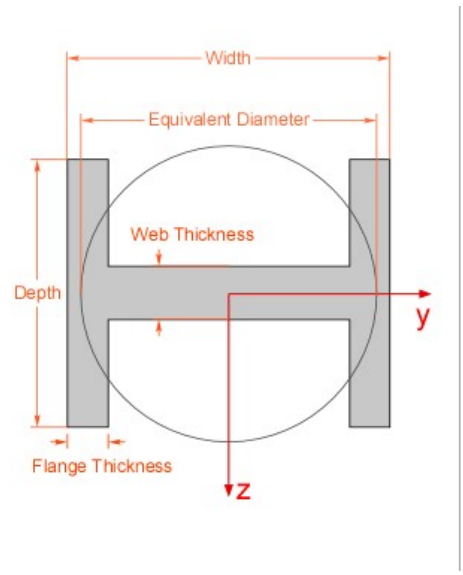

$b_s := 14.2 \cdot in$ (Width)

$d_s := 14.9 \cdot in$ (Depth)

$t_{fs} := 0.805 \cdot in$ (Flange thickness)

$t_{ws} := 0.805 \cdot in$ (Web thickness)

$E := 29000\ ksi$ (Steel Modulus of Elasticity)

$F_y := 50\ ksi$ (Yield Strength of Pile)

Subtract 1/16" all around these dimensions to account for corrosion.

$b'_s := b_s - 2 \cdot \left(\frac{1}{16}\right) \cdot in$ $\quad b'_s = 14.08\ in$

$d'_s := d_s - 2 \cdot \left(\frac{1}{16}\right) \cdot in$ $\quad d'_s = 14.78\ in$

$t'_{fs} := t_{fs} - 2 \cdot \left(\frac{1}{16}\right) \cdot in$ $\quad t'_{fs} = 0.68\ in$

$t'_{ws} := t_{ws} - 2 \cdot \left(\frac{1}{16}\right) \cdot in$ $\quad t'_{ws} = 0.68\ in$

$L_b := 5 \cdot ft$ (Unbraced length for lower zone
(This is zero, inputting 5ft for calculation purpose (Conservative)

$K_e := 1.0$ (Effective length factor, AASHTO Table C4.6.2.5-1)

Pile Applied loads

$P_{vertical} := 146.8\ kip$ (Pile vertical load due to superstructure loads (From GROUP))

$P_{earth_pressure} := 21\ kip$ (Additional pile load due to earth pressure, See Additional Load calculations)

$P_u := P_{vertical} + P_{earth_pressure} = 167.8\ kip$ (Factored Axial load on a single pile (From GROUP))

Section Properties:

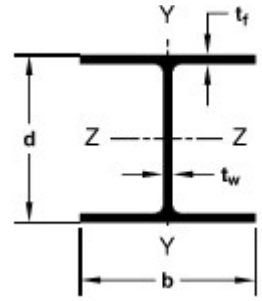

$b := d'_s$ (Width of flange)

$d := b'_s$ (Depth of section) $d = 14.08\ in$

$t_f := t'_{fs}$ (Thickness of flange) $t_f = 0.68\ in$

$t_w := t'_{ws}$ (Thickness of web) $t_w = 0.68\ in$

$h_w := d - 2 \cdot t_f$ (Height of web) $h_w = 12.72\ in$

$A_s := 2 \cdot t_f \cdot b + t_w \cdot h_w$ (Area of section) $A_s = 28.74\ in^2$

$I_y := \frac{t_f \cdot b^3}{6} + \frac{h_w \cdot t_w^3}{12}$ (Moment of inertia about y axis) $I_y = 365.88\ in^4$

$S_y := \frac{I_y}{\left(\frac{b}{2}\right)}$ (Elastic Section modulus about y axis) $S_y = 49.53\ in^3$

$Z_y := \frac{t_f \cdot b^2}{2} + \frac{h_w \cdot t_w^2}{4}$ (Plastic section modulus about y axis) $Z_y = 75.69\ in^3$

$r_y := \sqrt{\frac{I_y}{A_s}}$ (Radius of gyration about y axis) $r_y = 3.57\ in$

$I_z := \frac{b \cdot d^3}{12} - \frac{(b - t_w) \cdot h_w^3}{12}$ (Moment of inertia about z axis) $I_z = 1018.61\ in^4$

$S_z := \frac{I_z}{\left(\frac{d}{2}\right)}$ (Elastic section modulus about z axis) $S_z = 144.74\ in^3$

$Z_z := \frac{b \cdot d^2}{4} - \frac{(b - t_w) \cdot h_w^2}{4}$ (Plastic section modulus about z axis) $Z_z = 162.06\ in^3$

$r_z := \sqrt{\frac{I_z}{A_s}}$ (Radius of gyration about z axis) $r_z = 5.95\ in$

$\lambda := \frac{K_e \cdot L_b}{min(r_z, r_y)}$ (slenderness ratio of pile section) $\lambda = 17$

$\lambda_{limit} := 120$ (Limiting slenderness ratio, AASHTO Sec. 6.9.3)

```
Check4 := | if λ < λlimit
          |   | "Good. Slenderness ratio within the limit"
          | else
          |   | "Not Good. Slenderness ratio outside the limit"
```

$Check_4 =$ "Good. Slenderness ratio within the limit"

Axial Capacity of Pile Section

Check slenderness of section in compression (AASHTO Sec. 6.9.4.2.1)

$\lambda_{rf} := 0.56 \cdot \sqrt{\frac{E}{F_y}}$ (Limiting slenderness ratio of flange) $\lambda_{rf} = 13.49$

$\lambda_{rw} := 1.49 \cdot \sqrt{\frac{E}{F_y}}$ (Limiting slenderness ratio of web) $\lambda_{rw} = 35.88$

$\lambda_f := \frac{\left(\frac{b}{2}\right)}{t_f}$ (Slenderness ratio of flange) $\lambda_f = 10.86$

$\lambda_w := \frac{h_w}{t_w}$ (slenderness ratio of web) $\lambda_w = 18.7$

```
Slenderness := | if λf < λrf ∧ λw < λrw
               |   | "Non-slender section. Local buckling effects can be neglected"
               | else
               |   | "Slender section. Local buckling effects needs to be considered"
```

$Slenderness =$ "Non-slender section. Local buckling effects can be neglected"

Elastic critical buckling resistance based on flexural buckling (AASHTO Sec. 6.9.4.1.2)

$P_{ef} := \frac{\pi^2 \cdot E}{(\lambda)^2} \cdot A_s$ $P_{ef} = 29089\ kip$

Elastic critical buckling resistance based on torsional buckling (AASHTO Sec. 6.9.4.1.3)

$J_s := \frac{2 \cdot b \cdot t_f^3 + (d - t_f) \cdot t_w^3}{3}$ (St. Venant Constant) $J_s = 4.5\ in^4$

$C_w := \frac{I_y \cdot d^2}{4}$ (Warping torsional constant, AASHTO C6.9.4.1.3) $C_w = 18121\ in^6$

$KL := K_e \cdot L_b$ (Effective length for torsional buckling) $KL = 5\ ft$

$G' := 0.385 \cdot E$ (Shear modulus, AASHTO Sec. 6.9.4.1.3) $G' = 11165\ ksi$

$P_{eft} := \left(\frac{\pi^2 \cdot E \cdot C_w}{(KL)^2} + G' \cdot J_s\right) \cdot \frac{A_s}{I_y + I_z}$ $P_{eft} = 30950\ kip$

$P_e := min(P_{ef}, P_{eft})$ (Controlling Pe) $P_e = 29089\ kip$

Nominal Yield resistance (AASHTO Sec 6.9.4.1.1)

$P_o := F_y \cdot A_s$ $P_o = 1437\ kip$

Nominal Compressive resistance (AASHTO Sec. 6.9.4.1.1)

$$P_n := \begin{cases} \left(0.658^{\left(\frac{P_o}{P_e}\right)}\right) \cdot P_o & \text{if } \frac{P_o}{P_e} \le 2.25 \\ 0.877 \cdot P_e & \text{else} \end{cases}$$

$P_n = 1408\ kip$

$\phi_c := 0.5$ (Resistance factor for pile in compression where pile damage is likely for lower zone, AASHTO 6.5.4.2)

$P_r := \phi_c \cdot P_n = 703.8\ kip$ (Factored axial capacity of pile in compression)

Demand Capacity ratio for Axial Strength of Pile:

$DC_a := \frac{P_u}{P_r}$ $DC_a = 0.24$

$$Check_7 := \begin{cases} \text{“Good. Axial capacity of the section is sufficient”} & \text{if } DC_a < 1 \\ \text{“Good. Axial capacity of the section is not sufficient”} & \text{else} \end{cases}$$

$Check_7 =$ “Good. Axial capacity of the section is sufficient”

PILE STRUCTURAL DESIGN
END ABUTMENT

DUCTILITY

Pile Ductility Check

Because of large pile section, the ductility check of the pile is performed as per NYSDOT GDM 11.9.2.7.11 to verify it's ability to accommodate thermal movement of the integral abutment.

$F_y := 50\ ksi$ (Yield Strength of Pile)

$E := 29000\ ksi$ (Modulus of Elasticity of Steel)

$b := 14.08\ in$ (Flange width of pile, after reduction for corrosion)

$t_f := 0.68\ in$ (Flange thickness of pile, after reduction for corrosion)

$M_p := 458.4\ kip \cdot ft$ (Plastic moment of pile in the direction of thermal movement, see Pile design calculations for First Analysis, First Segment)

$\Delta' := 1.28\ in$ (Factored thermal movement, See Foundation Loads)

$L' := 2 \cdot (7.8 \cdot ft)$ (Twice the length from the bottom of abutment to the first point of zero moment in the pile, from GROUP)

$\theta_w := 0.01292\ rad$ (Max. range of factored angle of rotation of superstructure at abutment, See Foundation Loads)

$I := 1018.61\ in^4$ (Moment of inertia of pile in the direction of thermal movement, considering section loss due to corrosion)

For Steel H-Piles:

$$2\left[\frac{\Delta}{L} - \frac{M_p L}{6EI}\right] + \theta_w \le \frac{3C_i M_p L}{4EI} \qquad C_i = \frac{19}{6} - 5.68\sqrt{\frac{f_y}{E}}\frac{b_f}{2t_f} \qquad 0 < C_i < 1.0$$

$$C_i := min\left(max\left(\frac{19}{6} - 5.68 \cdot \sqrt{\frac{F_y}{E}} \cdot \frac{b}{2 \cdot t_f}, 0\right), 1\right) = 0.72 \qquad C_i = 0.72$$

$$Left_term := 2 \cdot \left(\frac{\Delta'}{L'} - \frac{M_p \cdot L'}{6 \cdot E \cdot I}\right) + \theta_w = 0.015$$

$$Right_term := \frac{3 \cdot C_i \cdot M_p \cdot L'}{4 \cdot E \cdot I} = 0.019$$

$Ductility :=$ if $Left_term \le Right_term$ "The pile is sufficiently ductile" else "The pile isn't sufficiently ductile" = "The pile is sufficiently ductile"

PILE STRUCTURAL DESIGN
END ABUTMENT

EARTH PRESSURE LOAD

Additional Loads on Integral Abutment Pile

Earth pressure on the abutments of continuous spans will produce additional vertical loads on the piles. The purpose of this worksheet is to calculate the additional pile loads on integral abutment piles in addition to gravity loads. PennDOT Bridge Manual DM-4, Appendix G, Section 1.4.2.2. This approximate calculation assumes that the spans are separated and are simply supported at the center pier.

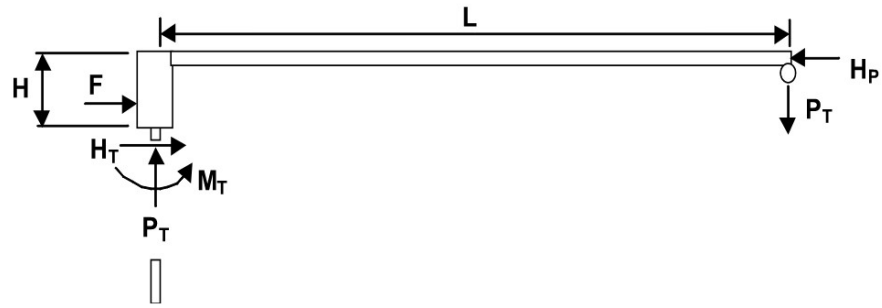

Figure C1.4.2.2-2 Pile Vertical Load Due to Earth Pressure on the Abutment

Earth pressure on the abutments of continuous spans will produce additional vertical loads on the piles. The value of the additional vertical load per pile may be approximately calculated using Figure C1.4.2.2-2 and Equation C1.4.2.2-1. This approximate calculation assumes that the end span is separated from the remaining of the bridge and that the end of the span at the first pier is simply supported.

$$P_T = \frac{\left(\frac{2FH}{3N}\right) + H_T H + M_T}{L} \qquad \text{(C1.4.2.2-1)}$$

Where:

P_T: The additional vertical load per pile due to earth pressure on the abutment (kips)
N: Number of piles in the abutment
F : Passive pressure force on the abutment (kips)
H: The height of the abutment (ft.)
H_T: The horizontal force on the pile, may be calculated as twice the plastic moment of the pile divided by the distance from the bottom of the abutment to the point of fixity of the piles (kips)
M_T: The moment at the top of the pile, may be conservatively taken as the plastic moment of the pile (kip-ft.)
L: Length of end span (ft.)

$\gamma_{backfill} := 130\ pcf$ (Unit weight of backfill soil)

$\varphi_{backfill} := 36\ deg$ (Friction angle of backfill soil)

$H_{abut} := 164.71\ ft - 155.33\ ft = 9.38\ ft$ (Height of abutment)

$L_{abut} := 54.5\ ft$ (Length of abutment)

$L_{span} := 114\ ft$ (Bridge span length)

$N_{piles} := 8$ (Number of piles in abutment)

$L_{fixity} := 37\ ft$ (Length of fixity of pile from bottom of abutment, from GROUP)

$M_p := 458.4\ kip \cdot ft$ (Plastic moment capacity of pile in strong axis, see Pile design calculations)

$H_T := \frac{2 \cdot M_p}{L_{fixity}} = 24.78\ kip$ (Horizontal force on top of pile)

$M_T := M_p = 458.4\ kip \cdot ft$ (Moment at the top of pile, conservatively taken as plastic moment capacity)

$K_p := \left(\tan\left(45\ deg + \frac{\varphi_{backfill}}{2}\right)\right)^2 = 3.85$ (Passive earth pressure coefficient)

$F := \left(\frac{1}{2} \cdot K_p \cdot \gamma_{backfill} \cdot H_{abut}^{\ 2}\right) \cdot L_{abut} = 1200.56\ kip$ (Passive earth pressure force on abutment)

Additional vertical load per pile due to earth pressure:

$$P_T := \frac{\left(\frac{2 \cdot F \cdot H_{abut}}{3 \cdot N_{piles}}\right) + H_T \cdot H_{abut} + M_T}{L_{span}} = 14.29\ kip$$

Factored additional vertical load (Strength) per pile:

$P_{T_STR} := (1.5) \cdot P_T = 21\ kip$

FIRST ANALYSIS (GROUP PROGRAM) INPUT
END ABUTMENT

```
==========================================================================

                 GROUP for Windows, Version 2019.11.10

                  Serial Number : 235486675

                  Analysis of A Group of Piles
               Subjected to Axial and Lateral Loading

                (c) Copyright ENSOFT, Inc., 1987-2018
                      All Rights Reserved

==========================================================================


This program is licensed to :

KC Engineering & Land Surveying
New York, NY, USA

Path to file locations      : P:\120179-NYSTA_D214866_TermBridge\Task_2\50
Design Documents\Geotech\Abutment_Foundation_Design\East_Abutment\GROUP\HP14X117 no
downdrag\
Name of input data file     : HP14x117 no downdrag.gp11r
Name of output echo file    : HP14x117 no downdrag.gp11e
Name of output results file : HP14x117 no downdrag.gp11o
Name of output summary file : HP14x117 no downdrag.gp11t
Name of plot output file    : HP14x117 no downdrag.gp11p
Name of runtime file        : HP14x117 no downdrag.gp11r


--------------------------------------------------------------------------
                     Time and Date of Analysis
--------------------------------------------------------------------------

          Date:  September 10, 2025     Time:  11:01:49





           *****     INPUT INFORMATION     *****


New Group


ANALYSIS TYPE = 3D ANALYSIS
```

```
ADJUST DEPTH FOR BATTER PILES

GENERATE LOAD-DISP (AND T-R) CURVES BASED ON SOIL PROFILE

EXTEND INTERPOLATION FOR L-DP (AND T-R) CURVES

UNITS SYSTEM  = ENGL



* TABLE B *  PILE CAP OPTIONS

LENGTH,YY    ( FT ) =    3.000
WIDTH, ZZ    ( FT ) =    54.50
THICKNESS,XX ( FT ) =    8.130

* PILE CAP DIMENSIONS ARE NOT CONSIDERED
  FOR THE PILE GROUP ANALYSIS




* TABLE C *  LOAD AND CONTROL PARAMETERS


** LOAD CASES **


NUMBER OF LOAD CASES :    1


LOAD CASE    :     1
CASE NAME    : Load Case

LOAD TYPE    : Dead, DL
SCALE FACTOR :       1.0000

* SPECIFIED DISPLACEMENTS/LOADS *

- DOF 1 ,      VERT. LOAD,KIP          1174.36
- DOF 2 ,      HOR.DISP Y, IN         -1.28000
- DOF 3 ,      HOR.LOAD Z,KIP          0.00000
- DOF 4 ,        MOMENT X,KIP-IN       0.00000
- DOF 5 ,        MOMENT Y,KIP-IN       0.00000
- DOF 6 ,      ROTATION Z,RAD        -0.0129200
- LOCATION       COORD. X, FT          0.00000
- LOCATION       COORD. Y, FT          0.00000
- LOCATION       COORD. Z, FT          0.00000
```

```
* THE LOADING IS STATIC *


* CONTROL PARAMETERS *
    TOLERANCE ON CONVERGENCE OF PILE CAP MOVEMENT        =  1.00000E-04
    TOLERANCE ON DETERMINATION OF PILE DEFLECTIONS       =  1.00000E-04 IN
    MAX NO OF ITERATIONS ALLOWED FOR FOUNDATION ANALYSIS =      100
    MAXIMUM NO OF ITERATIONS ALLOWED FOR PILE ANALYSIS   =      100
    FACTOR TO APPLY THE LOAD IN INCREMENTS               =   1.0000
    MINIMUM FACTOR FOR LOAD INCREMENTS                   =   1.0000
    PRINT RESULTS ONLY AT PILE CAP



* TABLE D *   ARRANGEMENT OF PILE GROUPS

GROUP  CONN.Z-Z   CONN.Y-Y   PILE PROP  P-Y CURVE  L-S CURVE  T-R CURVE  R-F-L
SET
  1       FIX        FIX         1          0          1 G        1 G        0
  2       FIX        FIX         1          0          1 G        1 G        0
  3       FIX        FIX         1          0          1 G        1 G        0
  4       FIX        FIX         1          0          1 G        1 G        0
  5       FIX        FIX         1          0          1 G        1 G        0
  6       FIX        FIX         1          0          1 G        1 G        0
  7       FIX        FIX         1          0          1 G        1 G        0
  8       FIX        FIX         1          0          1 G        1 G        0

GROUP   CorX,FT    CorY,FT    CorZ,FT  ALPHA,DEG   BETA,DEG  THETA,DEG
GROUND,FT SPz,KIP-IN SPy,KIP-IN
  1       0.000      0.000     -15.75      0.000      90.00      0.000
-3.000     0.000      0.000
  2       0.000      0.000     -11.25      0.000      90.00      0.000
-3.000     0.000      0.000
  3       0.000      0.000     -6.750      0.000      90.00      0.000
-3.000     0.000      0.000
  4       0.000      0.000     -2.250      0.000      90.00      0.000
-3.000     0.000      0.000
  5       0.000      0.000      2.250      0.000      90.00      0.000
-3.000     0.000      0.000
  6       0.000      0.000      6.750      0.000      90.00      0.000
-3.000     0.000      0.000
  7       0.000      0.000      11.25      0.000      90.00      0.000
-3.000     0.000      0.000
  8       0.000      0.000      15.75      0.000      90.00      0.000
-3.000     0.000      0.000


* TABLE E *   PILE GEOMETRY AND PROPERTIES
              PILE TYPE = 1 - DRIVEN PILE
```

```
                          = 2 - DRILLED SHAFT

       PROP   SECTS   INC     PILE TYPE      LENGTH, FT
         1      1     100          1             127.00

     * PILE SECTIONS *

       PROP    SECT      FROM,FT         TO,FT    CROSS SECT
         1       1        0.00000        127.000       1

     * PILE CROSS SECTIONS *

      CROSS SECTION       :     1
      SECTION NAME        : HP14X117
      TYPE                :  ELASTIC
      CROSS SECTION TYPE  : H SECTION
      EQUIVALENT DIAMETER :       13.4000 IN
      EXTERNAL WIDTH      :       14.0800 IN
      EXTERNAL DEPTH      :       14.7800 IN
      FLANGE THICKNESS    :       0.68000 IN
      WEB THICKNESS       :       0.68000 IN
      YOUNG MODULUS       :       29000.0 KIP/IN**2
      SHEAR MODULUS       :       11165.0 KIP/IN**2

     * PILE CROSS SECTIONS PROPERTIES *

              ELASTIC SECTIONS

    SECT         DIAM,IN     PERIM,IN   AREA,IN**2   Iz,IN**4    Iy,IN**4
GJ,KIP-IN**2   Mn,KIP-IN    Vn,KIP
      1           13.400       84.5200      28.750      1019.7      366.25
1.5474E+07      0.0000      0.0000



     * TABLE F *   SOIL DATA


     SOILS INFORMATION

         GROUND SURFACE          =     -3.00000  FT

         9 LAYER(S) OF SOIL

         LAYER  1
         THE SOIL IS A SAND
                                                        TOP OF LAYER    BOTTOM OF
LAYER
         X COORDINATE                          (FT)       -3.00000           0.00000
         EFFECTIVE UNIT WEIGHT         (KIP/FT**3)        0.13000           0.13000
```

```
        FRICTION ANGLE                  (DEGREES)        36.0000           36.0000
        P-Y SUBGRADE MODULUS          (KIP/IN**3)        0.22500           0.22500
        ULTIMATE UNIT SIDE FRICTION   (KIP/FT**2)    5.21060E-03 (P)       0.15908
(P)
        ULTIMATE UNIT TIP RESISTANCE  (KIP/FT**2)        0.00000           0.00000

        LAYER  2
        THE SOIL IS A SAND
                                                      TOP OF LAYER    BOTTOM OF
LAYER
        X COORDINATE                         (FT)        0.00000           8.00000
        EFFECTIVE UNIT WEIGHT         (KIP/FT**3)        0.11000           0.11000
        FRICTION ANGLE                  (DEGREES)        28.0000           28.0000
        P-Y SUBGRADE MODULUS          (KIP/IN**3)      0.0250000         0.0250000
        ULTIMATE UNIT SIDE FRICTION   (KIP/FT**2)        0.15908 (P)       0.47410
(P)
        ULTIMATE UNIT TIP RESISTANCE  (KIP/FT**2)        0.00000           0.00000

        LAYER  3
        THE SOIL IS A SAND
                                                      TOP OF LAYER    BOTTOM OF
LAYER
        X COORDINATE                         (FT)        8.00000           10.0000
        EFFECTIVE UNIT WEIGHT         (KIP/FT**3)        0.12500           0.12500
        FRICTION ANGLE                  (DEGREES)        32.0000           32.0000
        P-Y SUBGRADE MODULUS          (KIP/IN**3)      0.0900000         0.0900000
        ULTIMATE UNIT SIDE FRICTION   (KIP/FT**2)        0.47410 (P)       0.54179
(P)
        ULTIMATE UNIT TIP RESISTANCE  (KIP/FT**2)        0.00000           0.00000

        LAYER  4
        THE SOIL IS A SAND
                                                      TOP OF LAYER    BOTTOM OF
LAYER
        X COORDINATE                         (FT)        10.0000           15.0000
        EFFECTIVE UNIT WEIGHT         (KIP/FT**3)      0.1000000         0.1000000
        FRICTION ANGLE                  (DEGREES)        26.0000           26.0000
        P-Y SUBGRADE MODULUS          (KIP/IN**3)      0.0250000         0.0250000
        ULTIMATE UNIT SIDE FRICTION   (KIP/FT**2)        0.54179 (P)       0.78871
(P)
        ULTIMATE UNIT TIP RESISTANCE  (KIP/FT**2)        0.00000           0.00000

        LAYER  5
        THE SOIL IS A SAND
                                                      TOP OF LAYER    BOTTOM OF
LAYER
        X COORDINATE                         (FT)        15.0000           16.5000
        EFFECTIVE UNIT WEIGHT         (KIP/FT**3)        0.13000           0.13000
        FRICTION ANGLE                  (DEGREES)        36.0000           36.0000
        P-Y SUBGRADE MODULUS          (KIP/IN**3)        0.22500           0.22500
```

```
        ULTIMATE UNIT SIDE FRICTION   (KIP/FT**2)        0.78871 (P)       1.06537
(P)
        ULTIMATE UNIT TIP RESISTANCE  (KIP/FT**2)        0.00000           0.00000

        LAYER  6
        THE SOIL IS A SAND
                                                       TOP OF LAYER    BOTTOM OF
LAYER
        X COORDINATE                          (FT)        16.5000           20.0000
        EFFECTIVE UNIT WEIGHT         (KIP/FT**3)      0.0676000         0.0676000
        FRICTION ANGLE                  (DEGREES)        36.0000           36.0000
        P-Y SUBGRADE MODULUS          (KIP/IN**3)        0.12500           0.12500
        ULTIMATE UNIT SIDE FRICTION   (KIP/FT**2)        1.06537 (P)       1.17917
(P)
        ULTIMATE UNIT TIP RESISTANCE  (KIP/FT**2)        0.00000           0.00000

        LAYER  7
        THE SOIL IS A STIFF CLAY WITH FREE WATER
                                                       TOP OF LAYER    BOTTOM OF
LAYER
        X COORDINATE                          (FT)        20.0000           30.0000
        EFFECTIVE UNIT WEIGHT         (KIP/FT**3)      0.0576000         0.0576000
        UNDRAINED COHESION, C         (KIP/FT**2)        0.75000           0.75000
        P-Y SUBGRADE MODULUS          (KIP/IN**3)        0.25000 (K)       0.25000
(K)
                                                        0.1000000 (C)     0.1000000
(C)
        STRAIN AT 50% STRESS                         1.00000E-02       1.00000E-02
        ULTIMATE UNIT SIDE FRICTION   (KIP/FT**2)        0.67799 (P)       0.43500
(P)
        ULTIMATE UNIT TIP RESISTANCE  (KIP/FT**2)        0.00000           0.00000

        LAYER  8
        THE SOIL IS A SOFT CLAY
                                                       TOP OF LAYER    BOTTOM OF
LAYER
        X COORDINATE                          (FT)        30.0000           126.000
        EFFECTIVE UNIT WEIGHT         (KIP/FT**3)      0.0376000         0.0376000
        UNDRAINED COHESION, C         (KIP/FT**2)        0.25000           0.25000
        STRAIN AT 50% STRESS                            0.0200000         0.0200000
        ULTIMATE UNIT SIDE FRICTION   (KIP/FT**2)        0.43500 (P)       254.277
(P)
        ULTIMATE UNIT TIP RESISTANCE  (KIP/FT**2)        0.00000           0.00000

        LAYER  9
        THE LAYER IS A WEAK ROCK
                                                       TOP OF LAYER    BOTTOM OF
LAYER
        X COORDINATE                          (FT)        126.000           127.000
        EFFECTIVE UNIT WEIGHT         (KIP/FT**3)      0.0876000         0.0876000
```

```
        UNIAXIAL COMPRESSIVE STRENGTH (KIP/IN**2)        15.0000          15.0000
        YOUNG MODULUS,ER              (KIP/IN**2)        0.00000          0.00000
        KRM                                           1.00000E-03      1.00000E-03
        RQD                                   (%)        55.0000          55.0000
        ULTIMATE UNIT SIDE FRICTION   (KIP/FT**2)        216.000 (P)      216.000
(P)
        ULTIMATE UNIT TIP RESISTANCE  (KIP/FT**2)        19440.0 (R)      19440.0
(R)

      Notes :  Program estimated values for listed parameters
               if zero input values were entered:
               (K) P-Y SUBGRADE MODULUS for Static Loading
               (C) P-Y SUBGRADE MODULUS for Cyclic Loading
               (P) ULTIMATE UNIT SIDE FRICTION for Driven Piles
               (R) ULTIMATE UNIT TIP RESISTANCE for Driven Piles


    * TABLE H *   AXIAL LOAD VS DISPLACEMENT

    AXIAL LOAD-DISPLACEMENT CURVES GENERATED INTERNALLY

      NUM OF CURVES  1

       CURVE  1          NUM OF POINTS 19

      DISPLACEMENT, IN       AXIAL LOAD,KIP
             -2.43484             -469.634
             -1.43412             -465.860
             -0.93375             -463.972
             -0.54450             -468.055
             -0.48977             -464.754
             -0.22595             -304.420
             -0.13471             -214.924
           -0.0278578             -52.0582
         -2.77706E-03             -5.36274
              0.00000              0.00000
              0.12479              203.163
              0.53025              509.956
              1.36244              970.481
              2.31374              1491.05
              5.32164              3116.30
              7.38336              4216.88
              8.02942              4351.50
              8.52942              4351.50
              9.52942              4351.50


    * TABLE I *   TORS. MOM. VS ANGLE ROT.
```

TORQUE-ROTATION CURVES GENERATED INTERNALLY

NUM OF CURVES 1

CURVE 1 NUM OF POINTS 19

ROT. ANGLE,Rad.	TORS.MOMEN,KIP-IN
-0.45552	-3145.60
-0.30608	-3128.96
-0.23132	-3116.36
-0.17436	-3138.29
-0.16605	-3132.04
-0.10240	-2449.86
-0.0758175	-2066.17
-0.0309189	-1202.29
-3.60507E-03	-180.875
0.00000	0.00000
3.60507E-03	180.875
0.0309189	1202.29
0.0758175	2066.17
0.10240	2449.86
0.16605	3132.04
0.17436	3138.29
0.23132	3116.36
0.30608	3128.96
0.45552	3145.60

* TABLE J * MOMENT CURVATURE SETS

* TABLE K * REDUCTION FACTORS

REDUCTION FACTORS FOR CLOSELY-SPACED PILE GROUPS ALONG Y-DIRECTION

GROUP NO	P-FACTOR	Y-FACTOR
1	0.8260	1.0000
2	0.8260	1.0000
3	0.8260	1.0000
4	0.8260	1.0000
5	0.8260	1.0000
6	0.8260	1.0000
7	0.8260	1.0000
8	0.8260	1.0000

REDUCTION FACTORS FOR CLOSELY-SPACED PILE GROUPS ALONG Z-DIRECTION

GROUP NO	P-FACTOR	Y-FACTOR
1	0.8260	1.0000
2	0.6510	1.0000
3	0.5020	1.0000
4	0.5020	1.0000
5	0.5020	1.0000
6	0.5020	1.0000
7	0.5020	1.0000
8	0.5020	1.0000

FIRST ANALYSIS (GROUP PROGRAM) OUTPUT
END ABUTMENT

```
==========================================================================

                 GROUP for Windows, Version 2019.11.10

                  Serial Number : 235486675

                  Analysis of A Group of Piles
               Subjected to Axial and Lateral Loading

                (c) Copyright ENSOFT, Inc., 1987-2018
                      All Rights Reserved

==========================================================================


--------------------------------------------------------------------------
                     Time and Date of Analysis
--------------------------------------------------------------------------

          Date:  September 10, 2025     Time:  11:01:49



            *****     COMPUTATION RESULTS     *****



New Group




            *****     LOAD CASES RESULTS      *****



LOAD CASE :     1
CASE NAME : Load Case

LOAD TYPE : Dead, DL

  REDUCTION FACTORS FOR CLOSELY-SPACED PILE GROUPS, COMBINED Y AND Z DIRECTIONS
  ESTIMATED USING MOVEMENT IN THE DIRECTION OF PILE CAP DISPLACEMENTS

       GROUP NO     P-FACTOR     Y-FACTOR

           1           0.8260       1.0000
           2           0.8260       1.0000
```

3	0.8260	1.0000
4	0.8260	1.0000
5	0.8260	1.0000
6	0.8260	1.0000
7	0.8260	1.0000
8	0.8260	1.0000

* TABLE L * COMPUTATION ON PILE CAP

* EQUIVALENT CONCENTRATED LOAD AT ORIGIN *

VERT. LOAD,KIPS	HOR. LOAD Y,KIPS	HOR. LOAD Z,KIPS
1174.36	-1768.36	3.35386E-33
MOMENT X ,KIP-IN	**MOMENT Y,KIP-IN**	**MOMENT Z,KIP-IN**
1.78814E-10	0.00000	-1.38662E+05

* DISPLACEMENT OF GROUPED PILE FOUNDATION AT ORIGIN *

VERTICAL ,IN	HORIZONTAL Y,IN	HORIZONTAL Z,IN
0.0901663	-1.28000	1.10647E-31
ANGLE ROT. X,RAD	**ANGLE ROT. Y,RAD**	**ANGLE ROT. Z,RAD**
-3.50431E-17	-1.51731E-35	-0.0129200

THE GLOBAL STRUCTURAL COORDINATE SYSTEM
---

* PILE TOP DISPLACEMENTS *

PILE GROUP	DISP. X,IN	DISP. Y,IN	DISP. Z,IN	ROT. X,RAD	ROT. Y,RAD	ROT. Z,RAD
**********	**********	**********	**********	**********	**********	**********
1	0.090166	-1.2800	1.1065E-31	-3.5043E-17	-1.5173E-35	-0.012920
2	0.090166	-1.2800	1.1065E-31	-3.5043E-17	-1.5173E-35	-0.012920
3	0.090166	-1.2800	1.1065E-31	-3.5043E-17	-1.5173E-35	-0.012920
4	0.090166	-1.2800	1.1065E-31	-3.5043E-17	-1.5173E-35	-0.012920
5	0.090166	-1.2800	1.1065E-31	-3.5043E-17	-1.5173E-35	

```
-0.012920
          6          0.090166      -1.2800   1.1065E-31  -3.5043E-17  -1.5173E-35
-0.012920
          7          0.090166      -1.2800   1.1065E-31  -3.5043E-17  -1.5173E-35
-0.012920
          8          0.090166      -1.2800   1.1065E-31  -3.5043E-17  -1.5173E-35
-0.012920

       MINIMUM       0.090166      -1.2800   1.1065E-31  -3.5043E-17  -1.5173E-35
-0.012920
       Pile N.          1            1            1            1            1
    1
       MAXIMUM       0.090166      -1.2800   1.1065E-31  -3.5043E-17  -1.5173E-35
-0.012920
       Pile N.          1            1            1            1            1
    1

       * PILE TOP REACTIONS *

      PILE GROUP   FOR. X,KIP   FOR. Y,KIP   FOR. Z,KIP MOM X,KIP-IN MOM Y,KIP-IN
MOM Z,KIP-IN
      **********  ***********  ***********  ***********  ***********  ***********
***********
          1            146.79      -221.05   1.1923E-44  -1.7753E-12   1.2395E-28
-1.7333E+04
          2            146.79      -221.05   1.3262E-44  -1.7753E-12   1.2395E-28
-1.7333E+04
          3            146.79      -221.05   1.3276E-44  -1.7753E-12   1.2395E-28
-1.7333E+04
          4            146.79      -221.05   1.9597E-44  -1.7753E-12   1.2395E-28
-1.7333E+04
          5            146.79      -221.05   1.8414E-44  -1.7753E-12   1.2395E-28
-1.7333E+04
          6            146.79      -221.05   2.0451E-44  -1.7753E-12   1.2395E-28
-1.7333E+04
          7            146.79      -221.05   2.4711E-44  -1.7753E-12   1.2395E-28
-1.7333E+04
          8            146.79      -221.05   2.4434E-44  -1.7753E-12   1.2395E-28
-1.7333E+04

       MINIMUM         146.79      -221.05   1.1923E-44  -1.7753E-12   1.2395E-28
-1.7333E+04
       Pile N.          1            1            1            1            1
    1
       MAXIMUM         146.79      -221.05   2.4711E-44  -1.7753E-12   1.2395E-28
-1.7333E+04
       Pile N.          1            1            7            1            1
    1
```

THE PILE COORDINATE SYSTEM (LOCAL AXES)
---

* PILE TOP DISPLACEMENTS *

PILE GROUP	DISP. x,IN	DISP. y,IN	DISP. z,IN	ROT. x,RAD	ROT. y,RAD	ROT. z,RAD
**********	**********	**********	**********	**********	**********	**********
1	0.090166	-1.2800	1.1065E-31	-3.5043E-17	2.1306E-33	-0.012920
2	0.090166	-1.2800	1.1065E-31	-3.5043E-17	2.1306E-33	-0.012920
3	0.090166	-1.2800	1.1065E-31	-3.5043E-17	2.1306E-33	-0.012920
4	0.090166	-1.2800	1.1065E-31	-3.5043E-17	2.1306E-33	-0.012920
5	0.090166	-1.2800	1.1065E-31	-3.5043E-17	2.1306E-33	-0.012920
6	0.090166	-1.2800	1.1065E-31	-3.5043E-17	2.1306E-33	-0.012920
7	0.090166	-1.2800	1.1065E-31	-3.5043E-17	2.1306E-33	-0.012920
8	0.090166	-1.2800	1.1065E-31	-3.5043E-17	2.1306E-33	-0.012920
MINIMUM	0.090166	-1.2800	1.1065E-31	-3.5043E-17	2.1306E-33	-0.012920
Pile N.	1	1	1	1	1	1
MAXIMUM	0.090166	-1.2800	1.1065E-31	-3.5043E-17	2.1306E-33	-0.012920
Pile N.	1	1	1	1	1	1

* PILE TOP REACTIONS *

PILE GROUP	AXIAL,KIP	LAT. y,KIP	LAT. z,KIP	MOM x,KIP-IN	MOM y,KIP-IN	MOM z,KIP-IN
**********	**********	**********	**********	**********	**********	**********
1	146.79	-221.05	1.1923E-44	-1.7753E-12	2.3266E-28	-1.7333E+04
2	146.79	-221.05	1.3262E-44	-1.7753E-12	2.3266E-28	-1.7333E+04
3	146.79	-221.05	1.3276E-44	-1.7753E-12	2.3266E-28	-1.7333E+04
4	146.79	-221.05	1.9597E-44	-1.7753E-12	2.3266E-28	-1.7333E+04
5	146.79	-221.05	1.8414E-44	-1.7753E-12	2.3266E-28	

```
-1.7333E+04
          6            146.79      -221.05   2.0451E-44  -1.7753E-12   2.3266E-28
-1.7333E+04
          7            146.79      -221.05   2.4711E-44  -1.7753E-12   2.3266E-28
-1.7333E+04
          8            146.79      -221.05   2.4434E-44  -1.7753E-12   2.3266E-28
-1.7333E+04

       MINIMUM         146.79      -221.05   1.1923E-44  -1.7753E-12   2.3266E-28
-1.7333E+04
       Pile N.          1            1            1            1            1
    1
       MAXIMUM         146.79      -221.05   2.4711E-44  -1.7753E-12   2.3266E-28
-1.7333E+04
       Pile N.          1            1            7            1            1
    1

      PILE GROUP   STRESS,KIP/IN**2
      **********  ****************
          1            118.99
          2            118.99
          3            118.99
          4            118.99
          5            118.99
          6            118.99
          7            118.99
          8            118.99

       MINIMUM         118.99
       Pile N.          1
       MAXIMUM         118.99
       Pile N.          1

       * EFFECTS FOR LATERALLY LOADED PILE *

       * MINIMUM VALUES AND LOCATIONS *

     PILE     DISPL.      DISPL.      MOMENT      MOMENT       SHEAR       SHEAR
SOIL REACT  SOIL REACT     TOTAL    FLEX. RIG.  FLEX. RIG.
               y-DIR       z-DIR       z-DIR       y-DIR       y-DIR       z-DIR
  y-DIR       z-DIR      STRESS       z-DIR       y-DIR
                IN          IN        KIP-IN      KIP-IN        KIP         KIP
 KIP/IN      KIP/IN     KIP/IN**2   KIP-IN**2   KIP-IN**2
    ******  **********  **********  **********  **********  **********  **********
**********  **********  **********  **********  **********
        1      -1.4276 -4.4278E-33     -3423.7 -1.2303E-29     -219.28 -2.0954E-30
  -3.0450 -4.5122E-32      5.1058  2.9572E+07  1.0621E+07
     x(FT)      2.5400      11.430      12.700      16.510      0.0000      7.6200
   8.8900      15.240      64.770      0.0000      0.0000
        2      -1.4276 -4.4278E-33     -3423.7 -1.2303E-29     -219.28 -2.0954E-30
```

```
  -3.0450 -4.5122E-32      5.1058  2.9572E+07  1.0621E+07
     x(FT)      2.5400      11.430      12.700      16.510      0.0000      7.6200
   8.8900      15.240      64.770      0.0000      0.0000
        3      -1.4276 -4.4278E-33     -3423.7 -1.2303E-29     -219.28 -2.0954E-30
  -3.0450 -4.5122E-32      5.1058  2.9572E+07  1.0621E+07
     x(FT)      2.5400      11.430      12.700      16.510      0.0000      7.6200
   8.8900      15.240      64.770      0.0000      0.0000
        4      -1.4276 -4.4278E-33     -3423.7 -1.2303E-29     -219.28 -2.0954E-30
  -3.0450 -4.5122E-32      5.1058  2.9572E+07  1.0621E+07
     x(FT)      2.5400      11.430      12.700      16.510      0.0000      7.6200
   8.8900      15.240      64.770      0.0000      0.0000
        5      -1.4276 -4.4278E-33     -3423.7 -1.2303E-29     -219.28 -2.0954E-30
  -3.0450 -4.5122E-32      5.1058  2.9572E+07  1.0621E+07
     x(FT)      2.5400      11.430      12.700      16.510      0.0000      7.6200
   8.8900      15.240      64.770      0.0000      0.0000
        6      -1.4276 -4.4278E-33     -3423.7 -1.2303E-29     -219.28 -2.0954E-30
  -3.0450 -4.5122E-32      5.1058  2.9572E+07  1.0621E+07
     x(FT)      2.5400      11.430      12.700      16.510      0.0000      7.6200
   8.8900      15.240      64.770      0.0000      0.0000
        7      -1.4276 -4.4278E-33     -3423.7 -1.2303E-29     -219.28 -2.0954E-30
  -3.0450 -4.5122E-32      5.1058  2.9572E+07  1.0621E+07
     x(FT)      2.5400      11.430      12.700      16.510      0.0000      7.6200
   8.8900      15.240      64.770      0.0000      0.0000
        8      -1.4276 -4.4278E-33     -3423.7 -1.2303E-29     -219.28 -2.0954E-30
  -3.0450 -4.5122E-32      5.1058  2.9572E+07  1.0621E+07
     x(FT)      2.5400      11.430      12.700      16.510      0.0000      7.6200
   8.8900      15.240      64.770      0.0000      0.0000

      Min.     -1.4276 -4.4278E-33     -3423.7 -1.2303E-29     -219.28 -2.0954E-30
  -3.0450 -4.5122E-32      5.1058  2.9572E+07  1.0621E+07
   Pile N.       1           1           1           1           1           1
    1           1           1           1           1

      * MAXIMUM VALUES AND LOCATIONS *

     PILE     DISPL.      DISPL.      MOMENT      MOMENT       SHEAR       SHEAR
SOIL REACT  SOIL REACT     TOTAL    FLEX. RIG.  FLEX. RIG.
               y-DIR       z-DIR       z-DIR       y-DIR       y-DIR       z-DIR
  y-DIR       z-DIR      STRESS       z-DIR       y-DIR
                IN          IN        KIP-IN      KIP-IN        KIP         KIP
 KIP/IN      KIP/IN     KIP/IN**2   KIP-IN**2   KIP-IN**2
    ******  **********  **********  **********  **********  **********  **********
**********  **********  **********  **********  **********
        1     0.054644  1.1065E-31  1.7333E+04  2.3387E-28      43.734  1.6932E-31
   1.0381  3.0572E-32      118.99  2.9572E+07  1.0621E+07
     x(FT)      21.590      0.0000      0.0000      1.2700      16.510      19.050
   19.050      1.2700      0.0000      0.0000      0.0000
        2     0.054644  1.1065E-31  1.7333E+04  2.3387E-28      43.734  1.6932E-31
   1.0381  3.0572E-32      118.99  2.9572E+07  1.0621E+07
     x(FT)      21.590      0.0000      0.0000      1.2700      16.510      19.050
```

```
19.050      1.2700      0.0000      0.0000      0.0000
     3     0.054644  1.1065E-31  1.7333E+04  2.3387E-28      43.734  1.6932E-31
1.0381  3.0572E-32      118.99  2.9572E+07  1.0621E+07
  x(FT)      21.590      0.0000      0.0000      1.2700      16.510      19.050
19.050      1.2700      0.0000      0.0000      0.0000
     4     0.054644  1.1065E-31  1.7333E+04  2.3387E-28      43.734  1.6932E-31
1.0381  3.0572E-32      118.99  2.9572E+07  1.0621E+07
  x(FT)      21.590      0.0000      0.0000      1.2700      16.510      19.050
19.050      1.2700      0.0000      0.0000      0.0000
     5     0.054644  1.1065E-31  1.7333E+04  2.3387E-28      43.734  1.6932E-31
1.0381  3.0572E-32      118.99  2.9572E+07  1.0621E+07
  x(FT)      21.590      0.0000      0.0000      1.2700      16.510      19.050
19.050      1.2700      0.0000      0.0000      0.0000
     6     0.054644  1.1065E-31  1.7333E+04  2.3387E-28      43.734  1.6932E-31
1.0381  3.0572E-32      118.99  2.9572E+07  1.0621E+07
  x(FT)      21.590      0.0000      0.0000      1.2700      16.510      19.050
19.050      1.2700      0.0000      0.0000      0.0000
     7     0.054644  1.1065E-31  1.7333E+04  2.3387E-28      43.734  1.6932E-31
1.0381  3.0572E-32      118.99  2.9572E+07  1.0621E+07
  x(FT)      21.590      0.0000      0.0000      1.2700      16.510      19.050
19.050      1.2700      0.0000      0.0000      0.0000
     8     0.054644  1.1065E-31  1.7333E+04  2.3387E-28      43.734  1.6932E-31
1.0381  3.0572E-32      118.99  2.9572E+07  1.0621E+07
  x(FT)      21.590      0.0000      0.0000      1.2700      16.510      19.050
19.050      1.2700      0.0000      0.0000      0.0000

   Max.    0.054644  1.1065E-31  1.7333E+04  2.3387E-28      43.734  1.6932E-31
1.0381  3.0572E-32      118.99  2.9572E+07  1.0621E+07
Pile N.       1           1           1           1           1           1
 1           1           1           1           1


              *****     SUMMARY FOR LOAD CASES AND COMBINATIONS      *****


              *****     LOAD CASES RESULTS      *****

   LOAD CASE :     1

   * TABLE L *   COMPUTATION ON PILE CAP

   * EQUIVALENT CONCENTRATED LOAD AT ORIGIN *
         LOAD X,KIP     LOAD Y,KIP     LOAD Z,KIP    MOM X,KIP-IN   MOM Y,KIP-IN
MOM Z,KIP-IN
              1174.36       -1768.36    3.35386E-33    1.78814E-10        0.00000
-1.38662E+05

   * DISPLACEMENT OF GROUPED PILE FOUNDATION AT ORIGIN *
```

```
            DISP X,IN      DISP Y,IN      DISP Z,IN      ROT X,RAD      ROT Y,RAD
  ROT Z,RAD
             0.0901663       -1.28000    1.10647E-31   -3.50431E-17   -1.51731E-35
  -0.0129200

       * PILE TOP DISPLACEMENTS, GLOBAL *
                   DISP. X,IN   DISP. Y,IN   DISP. Z,IN   ROT. X,RAD   ROT. Y,RAD
ROT. Z,RAD
                  ***********  ***********  ***********  ***********  ***********
***********
       MINIMUM       0.090166      -1.2800   1.1065E-31  -3.5043E-17  -1.5173E-35
-0.012920
       Pile N.          1            1            1            1            1
    1
       MAXIMUM       0.090166      -1.2800   1.1065E-31  -3.5043E-17  -1.5173E-35
-0.012920
       Pile N.          1            1            1            1            1
    1

       * PILE TOP REACTIONS, GLOBAL *
                   FOR. X,KIP   FOR. Y,KIP   FOR. Z,KIP MOM X,KIP-IN MOM Y,KIP-IN
MOM Z,KIP-IN
                  ***********  ***********  ***********  ***********  ***********
***********
       MINIMUM         146.79      -221.05   1.1923E-44  -1.7753E-12   1.2395E-28
-1.7333E+04
       Pile N.          1            1            1            1            1
    1
       MAXIMUM         146.79      -221.05   2.4711E-44  -1.7753E-12   1.2395E-28
-1.7333E+04
       Pile N.          1            1            7            1            1
    1

       * PILE TOP DISPLACEMENTS, LOCAL *
                   DISP. x,IN   DISP. y,IN   DISP. z,IN   ROT. x,RAD   ROT. y,RAD
ROT. z,RAD
                  ***********  ***********  ***********  ***********  ***********
***********
       MINIMUM       0.090166      -1.2800   1.1065E-31  -3.5043E-17   2.1306E-33
-0.012920
       Pile N.          1            1            1            1            1
    1
       MAXIMUM       0.090166      -1.2800   1.1065E-31  -3.5043E-17   2.1306E-33
-0.012920
       Pile N.          1            1            1            1            1
    1

       * PILE TOP REACTIONS, LOCAL *
                   AXIAL,KIP    LAT. y,KIP   LAT. z,KIP MOM x,KIP-IN MOM y,KIP-IN
MOM z,KIP-IN
```

```
                  ***********  ***********  ***********  ***********  ***********
***********
       MINIMUM         146.79      -221.05   1.1923E-44  -1.7753E-12   2.3266E-28
-1.7333E+04
       Pile N.          1            1            1            1            1
    1
       MAXIMUM         146.79      -221.05   2.4711E-44  -1.7753E-12   2.3266E-28
-1.7333E+04
       Pile N.          1            1            7            1            1
    1

       * EFFECTS FOR LATERALLY LOADED PILE *

     PILE     DISPL.      DISPL.      MOMENT      MOMENT       SHEAR       SHEAR
SOIL REACT  SOIL REACT     TOTAL
               y-DIR       z-DIR       z-DIR       y-DIR       y-DIR       z-DIR
  y-DIR       z-DIR      STRESS
                IN          IN        KIP-IN      KIP-IN        KIP         KIP
 KIP/IN      KIP/IN     KIP/IN**2
    ******  **********  **********  **********  **********  **********  **********
**********  **********  **********
      Min.     -1.4276 -4.4278E-33     -3423.7 -1.2303E-29     -219.28 -2.0954E-30
  -3.0450 -4.5122E-32      5.1058
   Pile N.       1           1           1           1           1           1
    1           1           1
      Max.    0.054644  1.1065E-31  1.7333E+04  2.3387E-28      43.734  1.6932E-31
   1.0381  3.0572E-32      118.99
   Pile N.       1           1           1           1           1           1
    1           1           1
```

SECOND ANALYSIS (LPILE) INPUT & OUTPUT
END ABUTMENT

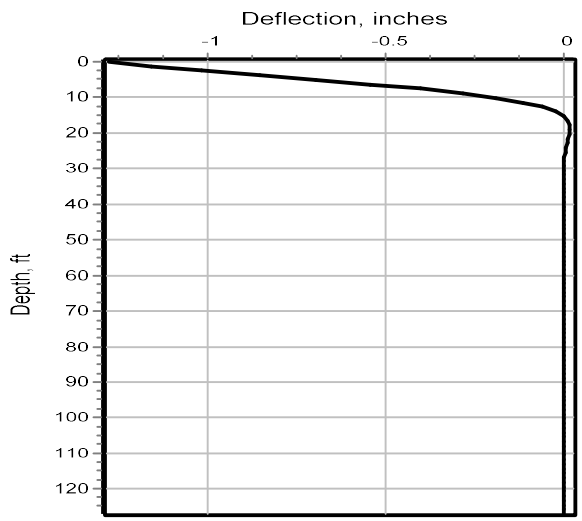
Deflection, inches
-1
-0.5
0
Depth, ft
0
10
20
30
40
50
60
70
80
90
100
110
120

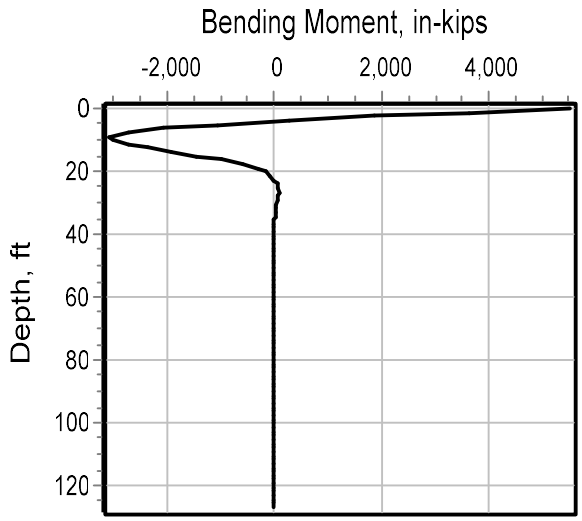
Bending Moment, in-kips
-2,000
0
2,000
4,000
Depth, ft
0
20
40
60
80
100
120

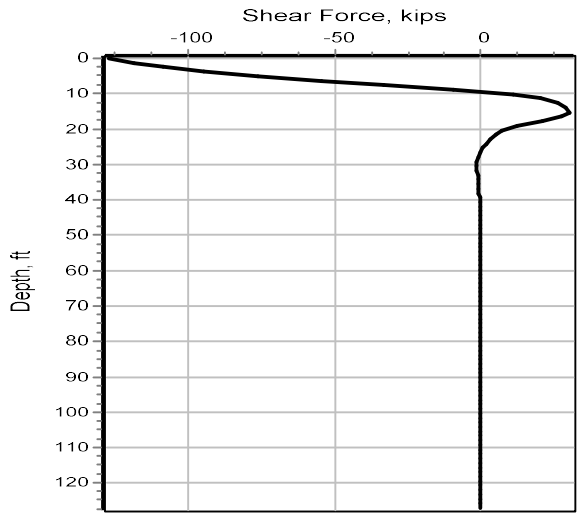
Shear Force, kips
-100
-50
0
Depth, ft
0
10
20
30
40
50
60
70
80
90
100
110
120

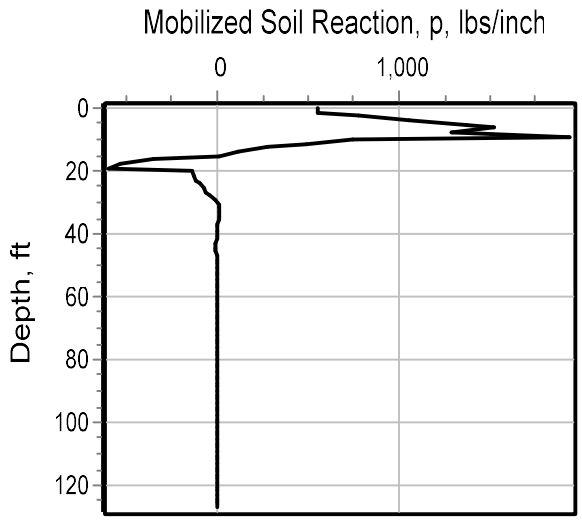
Mobilized Soil Reaction, p, lbs/inch
0
1,000
Depth, ft
0
20
40
60
80
100
120

==========

LPile for Windows, Version 2019-11.009

Analysis of Individual Piles and Drilled Shafts
Subjected to Lateral Loading Using the p-y Method
© 1985-2019 by Ensoft, Inc.
All Rights Reserved

==========

This copy of LPile is being used by:

kc
kc

Serial Number of Security Device: 181921636

This copy of LPile is licensed for exclusive use by:

KC Engineering and Land Surveyin

Use of this program by any entity other than KC Engineering and Land Surveyin
is a violation of the software license agreement.

Files Used for Analysis

Path to file locations:
\120179-NYSTA_D214866_TermBridge\Task_2\50 Design
Documents\Geotech\Abutment_Foundation_Design\East_Abutment\GROUP\HP14X117 no
downdrag\LPile\

Name of input data file:
hp14x117nodowndrag.lp11d

Name of output report file:
hp14x117nodowndrag.lp11o

Name of plot output file:
hp14x117nodowndrag.lp11p

Name of runtime message file:
hp14x117nodowndrag.lp11r

Date and Time of Analysis

Date: September 10, 2025 Time: 14:40:51

Problem Title

Project Name: Replacement of Malden Turnpike (CR-34) Bridge

Job Number: D214866

Client: NYSTA

Engineer: KC Engineering

Description:

Program Options and Settings

Computational Options:
- Conventional Analysis

Engineering Units Used for Data Input and Computations:
- US Customary System Units (pounds, feet, inches)

Analysis Control Options:

- Maximum number of iterations allowed	=	500	
- Deflection tolerance for convergence	=	1.0000E-05	in
- Maximum allowable deflection	=	100.0000	in
- Number of pile increments	=	100	

Loading Type and Number of Cycles of Loading:
- Static loading specified

```
 - Use of p-y modification factors for p-y curves not selected
 - Analysis uses layering correction (Method of Georgiadis)
 - No distributed lateral loads are entered
 - Loading by lateral soil movements acting on pile not selected
 - Input of shear resistance at the pile tip not selected
 - Input of moment resistance at the pile tip not selected
 - Input of side resistance moment along pile not selected
 - Computation of pile-head foundation stiffness matrix not selected
 - Push-over analysis of pile not selected
 - Buckling analysis of pile not selected

Output Options:
 - Output files use decimal points to denote decimal symbols.
 - Values of pile-head deflection, bending moment, shear force, and
   soil reaction are printed for full length of pile.
 - Printing Increment (nodal spacing of output points) = 1
 - No p-y curves to be computed and reported for user-specified depths
 - Print using wide report formats



--------------------------------------------------------------------------------
                     Pile Structural Properties and Geometry
--------------------------------------------------------------------------------

Number of pile sections defined                        =            1
Total length of pile                                   =      127.000 ft
Depth of ground surface below top of pile              =      -3.0000 ft

Pile diameters used for p-y curve computations are defined using 2 points.

p-y curves are computed using pile diameter values interpolated with depth over
the length of the pile. A summary of values of pile diameter vs. depth follows.

            Depth Below           Pile
Point        Pile Head          Diameter
 No.            feet             inches
-----      -------------     -------------
  1             0.000           14.0800
  2           127.000           14.0800


Input Structural Properties for Pile Sections:
----------------------------------------------

Pile Section No. 1:

   Section 1 is a H strong axis steel pile
```

```
   Length of section                                   =   127.000000 ft
   Pile width                                          =    14.080000 in
   Shear capacity of section                           =       0.0000 lbs



--------------------------------------------------------------------------------
                        Ground Slope and Pile Batter Angles
--------------------------------------------------------------------------------

Ground Slope Angle                                     =        0.000 degrees
                                                       =        0.000 radians

Pile Batter Angle                                      =        0.000 degrees
                                                       =        0.000 radians


--------------------------------------------------------------------------------
                        Soil and Rock Layering Information
--------------------------------------------------------------------------------

The soil profile is modelled using 9 layers

Layer 1 is sand, p-y criteria by Reese et al., 1974

   Distance from top of pile to top of layer           =    -3.000000 ft
   Distance from top of pile to bottom of layer        =       0.0000 ft
   Effective unit weight at top of layer               =   130.000000 pcf
   Effective unit weight at bottom of layer            =   130.000000 pcf
   Friction angle at top of layer                      =    36.000000 deg.
   Friction angle at bottom of layer                   =    36.000000 deg.
   Subgrade k at top of layer                          =   225.000000 pci
   Subgrade k at bottom of layer                       =   225.000000 pci


Layer 2 is sand, p-y criteria by Reese et al., 1974

   Distance from top of pile to top of layer           =       0.0000 ft
   Distance from top of pile to bottom of layer        =     8.000000 ft
   Effective unit weight at top of layer               =   110.000000 pcf
   Effective unit weight at bottom of layer            =   110.000000 pcf
   Friction angle at top of layer                      =    28.000000 deg.
   Friction angle at bottom of layer                   =    28.000000 deg.
   Subgrade k at top of layer                          =    25.000000 pci
   Subgrade k at bottom of layer                       =    25.000000 pci


Layer 3 is sand, p-y criteria by Reese et al., 1974
```

```
   Distance from top of pile to top of layer          =     8.000000 ft
   Distance from top of pile to bottom of layer       =    10.000000 ft
   Effective unit weight at top of layer              =   125.000000 pcf
   Effective unit weight at bottom of layer           =   125.000000 pcf
   Friction angle at top of layer                     =    32.000000 deg.
   Friction angle at bottom of layer                  =    32.000000 deg.
   Subgrade k at top of layer                         =    90.000000 pci
   Subgrade k at bottom of layer                      =    90.000000 pci


Layer 4 is sand, p-y criteria by Reese et al., 1974

   Distance from top of pile to top of layer          =    10.000000 ft
   Distance from top of pile to bottom of layer       =    15.000000 ft
   Effective unit weight at top of layer              =   100.000000 pcf
   Effective unit weight at bottom of layer           =   100.000000 pcf
   Friction angle at top of layer                     =    26.000000 deg.
   Friction angle at bottom of layer                  =    26.000000 deg.
   Subgrade k at top of layer                         =    25.000000 pci
   Subgrade k at bottom of layer                      =    25.000000 pci


Layer 5 is sand, p-y criteria by Reese et al., 1974

   Distance from top of pile to top of layer          =    15.000000 ft
   Distance from top of pile to bottom of layer       =    16.500000 ft
   Effective unit weight at top of layer              =   130.000000 pcf
   Effective unit weight at bottom of layer           =   130.000000 pcf
   Friction angle at top of layer                     =    36.000000 deg.
   Friction angle at bottom of layer                  =    36.000000 deg.
   Subgrade k at top of layer                         =   225.000000 pci
   Subgrade k at bottom of layer                      =   225.000000 pci


Layer 6 is sand, p-y criteria by Reese et al., 1974

   Distance from top of pile to top of layer          =    16.500000 ft
   Distance from top of pile to bottom of layer       =    20.000000 ft
   Effective unit weight at top of layer              =    67.600000 pcf
   Effective unit weight at bottom of layer           =    67.600000 pcf
   Friction angle at top of layer                     =    36.000000 deg.
   Friction angle at bottom of layer                  =    36.000000 deg.
   Subgrade k at top of layer                         =   125.000000 pci
   Subgrade k at bottom of layer                      =   125.000000 pci


Layer 7 is stiff clay with water-induced erosion

   Distance from top of pile to top of layer          =    20.000000 ft
   Distance from top of pile to bottom of layer       =    30.000000 ft
```

```
   Effective unit weight at top of layer              =    57.600000 pcf
   Effective unit weight at bottom of layer           =    57.600000 pcf
   Undrained cohesion at top of layer                 =   750.000000 psf
   Undrained cohesion at bottom of layer              =   750.000000 psf
   Epsilon-50 at top of layer                         =     0.010000
   Epsilon-50 at bottom of layer                      =     0.010000
   Subgrade k at top of layer                         =       0.0000 pci
   Subgrade k at bottom of layer                      =       0.0000 pci

   NOTE: Default values for subgrade k will be computed for this layer.

Layer 8 is soft clay, p-y criteria by Matlock, 1970

   Distance from top of pile to top of layer          =    30.000000 ft
   Distance from top of pile to bottom of layer       =   126.000000 ft
   Effective unit weight at top of layer              =    37.600000 pcf
   Effective unit weight at bottom of layer           =    37.600000 pcf
   Undrained cohesion at top of layer                 =   250.000000 psf
   Undrained cohesion at bottom of layer              =   250.000000 psf
   Epsilon-50 at top of layer                         =     0.020000
   Epsilon-50 at bottom of layer                      =     0.020000


Layer 9 is weak rock, p-y criteria by Reese, 1997

   Distance from top of pile to top of layer          =   126.000000 ft
   Distance from top of pile to bottom of layer       =   127.000000 ft
   Effective unit weight at top of layer              =   150.000000 pcf
   Effective unit weight at bottom of layer           =   150.000000 pcf
   Uniaxial compressive strength at top of layer      =       15000. psi
   Uniaxial compressive strength at bottom of layer   =       15000. psi
   Initial modulus of rock at top of layer            =       0.0000 psi
   Initial modulus of rock at bottom of layer         =       0.0000 psi
   RQD of rock at top of layer                        =    55.000000 %
   RQD of rock at bottom of layer                     =    55.000000 %
   k rm of rock at top of layer                       =    0.0010000
   k rm of rock at bottom of layer                    =    0.0010000


 (Depth of the lowest soil layer extends 0.000 ft below the pile tip)


**** Warning - Possible Input Data Error ****

Values entered for effective unit weight of rock were outside the limits of
50 pcf to 150 pcf.

The maximum input value, in layer   1, for effective unit weight = 150.00 pcf

This data may be erroneous. Please check your data.
```

```
--------------------------------------------------------------------------------
                        Summary of Input Soil Properties
--------------------------------------------------------------------------------

Layer         Soil Type          Layer      Effective    Cohesion     Angle of
Uniaxial                     E50                     Rock Mass
 Num.           Name             Depth       Unit Wt.                 Friction
 qu          RQD %         or            kpy        Modulus
          (p-y Curve Type)        ft           pcf          psf          deg.
 psi                        krm          pci          psi
-----   -------------------   ----------   ----------   ----------   ----------
----------   ----------   ----------   ----------   ----------
  1            Sand              -3.0000     130.0000       --          36.0000
 --            --            --         225.0000       --
          (Reese, et al.)          0.00     130.0000       --          36.0000
 --            --            --         225.0000       --
  2            Sand                0.00     110.0000       --          28.0000
 --            --            --          25.0000       --
          (Reese, et al.)        8.0000     110.0000       --          28.0000
 --            --            --          25.0000       --
  3            Sand               8.0000     125.0000       --          32.0000
 --            --            --          90.0000       --
          (Reese, et al.)       10.0000     125.0000       --          32.0000
 --            --            --          90.0000       --
  4            Sand              10.0000     100.0000       --          26.0000
 --            --            --          25.0000       --
          (Reese, et al.)       15.0000     100.0000       --          26.0000
 --            --            --          25.0000       --
  5            Sand              15.0000     130.0000       --          36.0000
 --            --            --         225.0000       --
          (Reese, et al.)       16.5000     130.0000       --          36.0000
 --            --            --         225.0000       --
  6            Sand              16.5000      67.6000       --          36.0000
 --            --            --         125.0000       --
          (Reese, et al.)       20.0000      67.6000       --          36.0000
 --            --            --         125.0000       --
  7         Stiff Clay           20.0000      57.6000     750.0000       --
 --            --          0.01000     default        --
          with Free Water       30.0000      57.6000     750.0000       --
 --            --          0.01000     default        --
  8            Soft              30.0000      37.6000     250.0000       --
 --            --          0.02000       --           --
               Clay             126.0000      37.6000     250.0000       --
 --            --          0.02000       --           --
  9            Weak             126.0000     150.0000       --           --
 15000.      55.0000      0.00100       --         default
               Rock             127.0000     150.0000       --           --
```

```
 15000.      55.0000      0.00100       --         default


--------------------------------------------------------------------------------
                                Static Loading Type
--------------------------------------------------------------------------------

Static loading criteria were used when computing p-y curves for all analyses.



--------------------------------------------------------------------------------
                Pile-head Loading and Pile-head Fixity Conditions
--------------------------------------------------------------------------------

Number of loads specified = 1

Load    Load         Condition               Condition            Axial Thrust
Compute Top y     Run Analysis
 No.    Type             1                       2                  Force, lbs
vs. Pile Length
-----   ----   --------------------   ------------------------   ----------------
---------------    ------------
   1     4     y =    -1.280000 in    M =     5501189. in-lbs            16780.
    N.A.               Yes

V = shear force applied normal to pile axis
M = bending moment applied to pile head
y = lateral deflection normal to pile axis
S = pile slope relative to original pile batter angle
R = rotational stiffness applied to pile head
Values of top y vs. pile lengths can be computed only for load types with
specified shear loading (Load Types 1, 2, and 3).
Thrust force is assumed to be acting axially for all pile batter angles.



--------------------------------------------------------------------------------
     Computations of Nominal Moment Capacity and Nonlinear Bending Stiffness
--------------------------------------------------------------------------------

Axial thrust force values were determined from pile-head loading conditions

Number of Pile Sections Analyzed = 1

Pile Section No. 1:
-------------------

Dimensions and Properties of Steel H Strong Axis:
---------------------------------------------
```

```
Length of Section                                        =   127.000000 ft
Flange Width                                             =    14.080000 in
Section Depth                                            =    14.780000 in
Flange Thickness                                         =     0.680000 in
Web Thickness                                            =     0.680000 in
Yield Stress of Pipe                                     =    50.000000 ksi
Elastic Modulus                                          =       29000. ksi
Cross-sectional Area                                     =    28.274400 sq. in.
Moment of Inertia                                        =        1089. in^4
Elastic Bending Stiffness                                =    31593714. kip-in^2
Plastic Modulus, Z                                       =   165.615428in^3
Plastic Moment Capacity = Fy Z                           =        8281.in-kip

Axial Structural Capacities:
----------------------------

Nom. Axial Structural Capacity = Fy As                   =     1413.720 kips
Nominal Axial Tensile Capacity                           =    -1413.720 kips



Number of Axial Thrust Force Values Determined from Pile-head Loadings = 1

   Number     Axial Thrust Force
                   kips
   ------     ------------------
      1              16.780

Definition of Run Messages:

   Y = part of pipe section has yielded.


Axial Thrust Force =     16.780 kips

    Bending       Bending       Bending      Depth to      Max Total  Run
   Curvature      Moment       Stiffness      N Axis        Stress    Msg
    rad/in.       in-kip        kip-in2         in            ksi
------------- ------------- ------------- ------------- ------------- ---
   0.00000517   163.1245202     31564858.    11.3499086     1.6899303
   0.00001034   326.2490404     31564858.     9.3699543     2.7863910
   0.00001550   489.3735606     31564858.     8.7099695     3.8828516
   0.00002067   652.4980807     31564858.     8.3799771     4.9793122
   0.00002584   815.6226009     31564858.     8.1819817     6.0757728
   0.00003101   978.7471211     31564858.     8.0499848     7.1722335
   0.00003618         1142.     31564858.     7.9557012     8.2686941
   0.00004134         1305.     31564858.     7.8849886     9.3651547
   0.00004651         1468.     31564858.     7.8299898    10.4616153
```

0.00005168	1631.	31564858.	7.7859909	11.5580760	
0.00005685	1794.	31564858.	7.7499917	12.6545366	
0.00006201	1957.	31564858.	7.7199924	13.7509972	
0.00006718	2121.	31564858.	7.6946084	14.8474579	
0.00007235	2284.	31564858.	7.6728506	15.9439185	
0.00007752	2447.	31564858.	7.6539939	17.0403791	
0.00008269	2610.	31564858.	7.6374943	18.1368397	
0.00008785	2773.	31564858.	7.6229358	19.2333004	
0.00009302	2936.	31564858.	7.6099949	20.3297610	
0.00009819	3099.	31564858.	7.5984162	21.4262216	
0.0001034	3262.	31564858.	7.5879954	22.5226822	
0.0001085	3426.	31564858.	7.5785671	23.6191429	
0.0001137	3589.	31564858.	7.5699958	24.7156035	
0.0001189	3752.	31564858.	7.5621699	25.8120641	
0.0001240	3915.	31564858.	7.5549962	26.9085247	
0.0001292	4078.	31564858.	7.5483963	28.0049854	
0.0001344	4241.	31564858.	7.5423042	29.1014460	
0.0001395	4404.	31564858.	7.5366633	30.1979066	
0.0001447	4567.	31564858.	7.5314253	31.2943672	
0.0001499	4731.	31564858.	7.5265486	32.3908279	
0.0001550	4894.	31564858.	7.5219970	33.4872885	
0.0001602	5057.	31564858.	7.5177390	34.5837491	
0.0001654	5220.	31564858.	7.5137471	35.6802097	
0.0001705	5383.	31564858.	7.5099972	36.7766704	
0.0001757	5546.	31564858.	7.5064679	37.8731310	
0.0001809	5709.	31564858.	7.5031402	38.9695916	
0.0001860	5872.	31564858.	7.4999975	40.0660523	
0.0001912	6036.	31564858.	7.4970246	41.1625129	
0.0001964	6199.	31564858.	7.4942081	42.2589735	
0.0002015	6362.	31564858.	7.4915361	43.3554341	
0.0002119	6688.	31564858.	7.4865831	45.5483554	
0.0002222	7014.	31564858.	7.4820909	47.7412766	
0.0002326	7341.	31564858.	7.4779980	49.9341979	
0.0002429	7596.	31273798.	7.5085788	50.0000000	Y
0.0002532	7723.	30496560.	7.5760561	50.0000000	Y
0.0002636	7787.	29544416.	7.6291897	50.0000000	Y
0.0002739	7826.	28572592.	7.6368177	50.0000000	Y
0.0002842	7858.	27646598.	7.6367157	50.0000000	Y
0.0002946	7887.	26773962.	7.6368289	50.0000000	Y
0.0003049	7913.	25951351.	7.6366076	50.0000000	Y
0.0003152	7936.	25174684.	7.6367590	50.0000000	Y
0.0003256	7957.	24440614.	7.6369959	50.0000000	Y
0.0003359	7977.	23745800.	7.6369297	50.0000000	Y
0.0003463	7994.	23087649.	7.6369072	50.0000000	Y
0.0003566	8010.	22463484.	7.6369297	50.0000000	Y
0.0003669	8025.	21870899.	7.6369974	50.0000000	Y
0.0003773	8038.	21307544.	7.6368885	50.0000000	Y
0.0003876	8051.	20771488.	7.6366071	50.0000000	Y
0.0003979	8062.	20260758.	7.6366076	50.0000000	Y
0.0004083	8073.	19773830.	7.6368289	50.0000000	Y

0.0004186	8083.	19309300.	7.6369959	50.0000000	Y
0.0004289	8092.	18865347.	7.6364876	50.0000000	Y
0.0004393	8100.	18440694.	7.6368177	50.0000000	Y
0.0004496	8108.	18034550.	7.6368670	50.0000000	Y
0.0004599	8116.	17645277.	7.6366296	50.0000000	Y
0.0004703	8123.	17272310.	7.6370768	50.0000000	Y
0.0004806	8129.	16914281.	7.6365311	50.0000000	Y
0.0004910	8135.	16570596.	7.6370427	50.0000000	Y
0.0005013	8141.	16240287.	7.6365202	50.0000000	Y
0.0005116	8146.	15922740.	7.6370996	50.0000000	Y
0.0005220	8151.	15617007.	7.6365966	50.0000000	Y
0.0005323	8156.	15322790.	7.6369530	50.0000000	Y
0.0005426	8161.	15039076.	7.6367621	50.0000000	Y
0.0005530	8165.	14765756.	7.6365417	50.0000000	Y
0.0005633	8169.	14501877.	7.6370200	50.0000000	Y
0.0005736	8173.	14247167.	7.6365638	50.0000000	Y
0.0005840	8176.	14001226.	7.6368238	50.0000000	Y
0.0005943	8180.	13763379.	7.6369297	50.0000000	Y
0.0006046	8183.	13533484.	7.6364984	50.0000000	Y
0.0006150	8186.	13311073.	7.6368454	50.0000000	Y
0.0006563	8197.	12489135.	7.6371568	50.0000000	Y
0.0006977	8206.	11761903.	7.6370996	50.0000000	Y
0.0007390	8213.	11114114.	7.6372257	50.0000000	Y
0.0007804	8220.	10533440.	7.6369315	50.0000000	Y
0.0008217	8225.	10010067.	7.6362403	50.0000000	Y
0.0008630	8230.	9535873.	7.6367954	50.0000000	Y
0.0009044	8234.	9104488.	7.6371454	50.0000000	Y
0.0009457	8237.	8710152.	7.6364334	50.0000000	Y
0.0009871	8241.	8348518.	7.6374581	50.0000000	Y
0.0010284	8243.	8015489.	7.6364226	50.0000000	Y
0.0010698	8246.	7708015.	7.6371880	50.0000000	Y
0.0011111	8248.	7423081.	7.6367621	50.0000000	Y
0.0011524	8250.	7158513.	7.6361677	50.0000000	Y

Summary of Results for Nominal Moment Capacity for Section 1

Load No.	Axial Thrust kips	Nominal Moment Capacity in-kips
1	16.7800000000	8250.

Note that the values in the above table are not factored by a strength reduction factor for LRFD.

The value of the strength reduction factor depends on the provisions of the

LRFD code being followed.

The above values should be multiplied by the appropriate strength reduction factor to compute ultimate moment capacity according to the LRFD structural design standard being followed.

Layering Correction Equivalent Depths of Soil & Rock Layers

Layer No.	Top of Layer Below Pile Head ft	Equivalent Top Depth Below Grnd Surf ft	Same Layer Type As Layer Above	Layer is Rock or is Below Rock Layer	F0 Integral for Layer lbs	F1 Integral for Layer lbs
1	-3.0000	0.00	N.A.	No	0.00	9865.
2	0.00	4.0458	Yes	No	9865.	112288.
3	8.0000	10.8167	Yes	No	122152.	73609.
4	10.0000	15.3423	Yes	No	195761.	162345.
5	15.0000	14.2769	Yes	No	358106.	118613.
6	16.5000	15.7176	Yes	No	476719.	360314.
7	20.0000	1025.	No	No	837033.	8478.
8	30.0000	322.7913	No	No	845512.	3903821.
9	126.0000	129.0000	No	Yes	N.A.	N.A.

Notes: The F0 integral of Layer n+1 equals the sum of the F0 and F1 integrals for Layer n. Layering correction equivalent depths are computed only for soil types with both shallow-depth and deep-depth expressions for peak lateral load transfer. These soil types are soft and stiff clays, non-liquefied sands, and cemented c-phi soil.

Computed Values of Pile Loading and Deflection
for Lateral Loading for Load Case Number 1

Pile-head conditions are Displacement and Moment (Loading Type 4)
Displacement of pile head = -1.280000 inches
Moment at pile head = 5501188.5 in-lbs
Axial load at pile head = 16780.0 lbs

Depth	Deflect.	Bending	Shear	Slope	Total	Bending	Soil

```
Res.  Soil Spr.  Distrib.
     X          y       Moment      Force        S       Stress    Stiffness      p
      Es*H     Lat. Load
   feet      inches     in-lbs       lbs      radians     psi*      lb-in^2
lb/inch    lb/inch    lb/inch
---------- ---------- ---------- ---------- ---------- ---------- ----------
---------- ---------- ----------
      0.00    -1.2800   5501189.   -127631.    0.00647     36142.   3.16E+10
549.6063      3272.       0.00
    1.2700    -1.1611   3617916.   -119224.    0.00868     23973.   3.16E+10
553.6886      7267.       0.00
    2.5400    -1.0156   1862795.   -109064.    0.01000     12631.   3.16E+10
779.6444     11700.       0.00
    3.8100    -0.8563    288523.    -95096.    0.01052      2458.   3.16E+10
1053.     18749.       0.00
    5.0800    -0.6950  -1041106.    -76635.    0.01034      7321.   3.16E+10
1369.     30024.       0.00
    6.3500    -0.5413  -2052610.    -54633.    0.00959     13858.   3.16E+10
1518.     42748.       0.00
    7.6200    -0.4027  -2711227.    -33288.    0.00844     18114.   3.16E+10
1283.     48555.       0.00
    8.8900    -0.2840  -3071533.     -8820.    0.00704     20442.   3.16E+10
1928.    103444.       0.00
   10.1600    -0.1880  -2983673.     11527.    0.00558     19874.   3.16E+10
742.2154     60168.       0.00
   11.4300    -0.1139  -2723058.     20940.    0.00420     18190.   3.16E+10
493.1115     65974.       0.00
   12.7000   -0.05986  -2347579.     26846.    0.00298     15764.   3.16E+10
281.9241     71780.       0.00
   13.9700   -0.02308  -1906331.     29889.    0.00195     12912.   3.16E+10
117.4894     77587.       0.00
   15.2400  -3.26E-04  -1437559.     30907.    0.00115      9883.   3.16E+10
16.0656    750540.       0.00
   16.5100    0.01185   -964879.     28387.   5.66E-04      6829.   3.16E+10
-346.7235    445999.       0.00
   17.7800    0.01692   -572609.     21726.   1.95E-04      4294.   3.16E+10
-527.4578    475031.       0.00
   19.0500    0.01778   -302774.     13225.  -1.66E-05      2550.   3.16E+10
-588.1696    504063.       0.00
   20.3200    0.01642   -169509.      7693.  -1.31E-04      1689.   3.16E+10
-137.7350    127868.       0.00
   21.5900    0.01380    -68212.      5681.  -1.88E-04      1034.   3.16E+10
-126.3000    139461.       0.00
   22.8600    0.01069      3758.      3872.  -2.04E-04   617.7554   3.16E+10
-111.1403    158508.       0.00
   24.1300    0.00760     49915.      2311.  -1.91E-04   916.0237   3.16E+10
-93.7230    188006.       0.00
   25.4000    0.00488     74298.      1025.  -1.61E-04      1074.   3.16E+10
-75.0965    234708.       0.00
   26.6700    0.00270     81230.    26.4337  -1.23E-04      1118.   3.16E+10
```

```
-55.9092    315379.       0.00
   27.9400    0.00112     75167.  -674.5533  -8.53E-05      1079.   3.16E+10
-36.0838    488844.       0.00
   29.2100   1.01E-04     60713.     -1024.  -5.25E-05   985.8020   3.16E+10
-9.7848   1472641.       0.00
   30.4800  -4.76E-04     43980.     -1025.  -2.72E-05   877.6694   3.16E+10
9.6903    310461.       0.00
   31.7500  -7.29E-04     29492.  -865.7431  -9.50E-06   784.0455   3.16E+10
11.1824    233770.       0.00
   33.0200  -7.65E-04     17597.  -693.7893   1.86E-06   707.1814   3.16E+10
11.3837    226681.       0.00
   34.2900  -6.72E-04      8344.  -523.7762   8.13E-06   647.3885   3.16E+10
10.9277    247757.       0.00
   35.5600  -5.18E-04      1628.  -363.9146   1.05E-05   603.9899   3.16E+10
10.0515    295928.       0.00
   36.8300  -3.51E-04     -2754.  -219.6666   1.03E-05   611.2635   3.16E+10
8.8787    385375.       0.00
   38.1000  -2.05E-04     -5073.   -94.9812   8.37E-06   626.2497   3.16E+10
7.4842    556787.       0.00
   39.3700  -9.59E-05     -5653.     7.0888   5.78E-06   629.9990   3.16E+10
5.9108    939182.       0.00
   40.6400  -2.86E-05     -4860.    83.8539   3.25E-06   624.8725   3.16E+10
4.1634   2220828.       0.00
   41.9100   3.02E-06     -3099.   112.9996   1.32E-06   613.4936   3.16E+10
-0.3385   1710083.       0.00
   43.1800   1.18E-05     -1416.    90.1481   2.35E-07   602.6202   3.16E+10
-2.6604   3435351.       0.00
   44.4500   1.02E-05  -351.1011    50.7790  -1.92E-07   595.7385   3.16E+10
-2.5061   3755885.       0.00
   45.7200   5.95E-06   131.8094    17.1228  -2.45E-07   594.3215   3.16E+10
-1.9107   4892236.       0.00
   46.9900   2.71E-06   170.9283     0.2502  -1.72E-07   594.5743   3.16E+10
-0.3035   1710083.       0.00
   48.2600   7.16E-07   139.5245    -2.6750  -9.68E-08   594.3713   3.16E+10
-0.08034   1710083.       0.00
   49.5300  -2.47E-07    89.4442    -3.0763  -4.16E-08   594.0477   3.16E+10
0.02767   1710083.       0.00
   50.8000  -5.51E-07    45.7800    -2.3943  -8.92E-09   593.7655   3.16E+10
0.06183   1710083.       0.00
   52.0700  -5.19E-07    16.4717    -1.4796   6.10E-09   593.5762   3.16E+10
0.05820   1710083.       0.00
   53.3400  -3.65E-07     0.6780    -0.7240   1.02E-08   593.4741   3.16E+10
0.04096   1710083.       0.00
   54.6100  -2.06E-07    -5.6025    -0.2354   9.05E-09   593.5059   3.16E+10
0.02316   1710083.       0.00
   55.8800  -8.91E-08    -6.5024    0.01722   6.13E-09   593.5117   3.16E+10
0.00999   1710083.       0.00
   57.1500  -1.95E-08    -5.0807     0.1101   3.34E-09   593.5025   3.16E+10
0.00219   1710083.       0.00
   58.4200   1.26E-08    -3.1497     0.1159   1.35E-09   593.4901   3.16E+10
```

```
-0.00142   1710083.       0.00
   59.6900   2.16E-08    -1.5475    0.08667   2.15E-10   593.4797   3.16E+10
-0.00242   1710083.       0.00
   60.9600   1.92E-08    -0.5080    0.05179  -2.81E-10   593.4730   3.16E+10
-0.00215   1710083.       0.00
   62.2300   1.30E-08    0.03138    0.02424  -3.96E-10   593.4699   3.16E+10
-0.00146   1710083.       0.00
   63.5000   7.11E-09     0.2310    0.00701  -3.33E-10   593.4712   3.16E+10
-7.98E-04   1710083.       0.00
   64.7700   2.89E-09     0.2453   -0.00155  -2.18E-10   593.4713   3.16E+10
-3.25E-04   1710083.       0.00
   66.0400   4.77E-10     0.1840   -0.00443  -1.14E-10   593.4709   3.16E+10
-5.35E-05   1710083.       0.00
   67.3100  -5.85E-10     0.1103   -0.00434  -4.31E-11   593.4704   3.16E+10
6.57E-05   1710083.       0.00
   68.5800  -8.36E-10    0.05185   -0.00312  -3.94E-12   593.4700   3.16E+10
9.38E-05   1710083.       0.00
   69.8500  -7.06E-10    0.01518   -0.00180   1.22E-11   593.4698   3.16E+10
7.92E-05   1710083.       0.00
   71.1200  -4.63E-10   -0.00310  -8.04E-04   1.52E-11   593.4697   3.16E+10
5.20E-05   1710083.       0.00
   72.3900  -2.44E-10   -0.00932  -1.99E-04   1.22E-11   593.4698   3.16E+10
2.73E-05   1710083.       0.00
   73.6600  -9.26E-11   -0.00918   8.83E-05   7.69E-12   593.4698   3.16E+10
1.04E-05   1710083.       0.00
   74.9300  -9.10E-12   -0.00663   1.75E-04   3.88E-12   593.4698   3.16E+10
1.02E-06   1710083.       0.00
   76.2000   2.56E-11   -0.00384   1.61E-04   1.35E-12   593.4697   3.16E+10
-2.87E-06   1710083.       0.00
   77.4700   3.20E-11   -0.00172   1.12E-04       0.00   593.4697   3.16E+10
-3.59E-06   1710083.       0.00
   78.7400   2.58E-11  -4.34E-04   6.24E-05       0.00   593.4697   3.16E+10
-2.89E-06   1710083.       0.00
   80.0100   1.64E-11   1.81E-04   2.63E-05       0.00   593.4697   3.16E+10
-1.84E-06   1710083.       0.00
   81.2800   8.28E-12   3.69E-04   5.25E-06       0.00   593.4697   3.16E+10
-9.29E-07   1710083.       0.00
   82.5500   2.90E-12   3.41E-04  -4.32E-06       0.00   593.4697   3.16E+10
-3.26E-07   1710083.       0.00
   83.8200       0.00   2.38E-04  -6.83E-06       0.00   593.4697   3.16E+10
-4.43E-09   1710083.       0.00
   85.0900  -1.08E-12   1.33E-04  -5.95E-06       0.00   593.4697   3.16E+10
1.21E-07   1710083.       0.00
   86.3600  -1.22E-12   5.64E-05  -3.99E-06       0.00   593.4697   3.16E+10
1.36E-07   1710083.       0.00
   87.6300       0.00   1.15E-05  -2.14E-06       0.00   593.4697   3.16E+10
1.05E-07   1710083.       0.00
   88.9000       0.00  -8.94E-06  -8.51E-07       0.00   593.4697   3.16E+10
6.46E-08   1710083.       0.00
   90.1700       0.00  -1.44E-05  -1.20E-07       0.00   593.4697   3.16E+10
```

3.13E-08 1710083. 0.00
91.4400 0.00 -1.26E-05 1.95E-07 0.00 593.4697 3.16E+10
9.97E-09 1710083. 0.00
92.7100 0.00 -8.47E-06 2.63E-07 0.00 593.4697 3.16E+10
-9.88E-10 1710083. 0.00
93.9800 0.00 -4.58E-06 2.18E-07 0.00 593.4697 3.16E+10
-4.95E-09 1710083. 0.00
95.2500 0.00 -1.83E-06 1.41E-07 0.00 593.4697 3.16E+10
-5.13E-09 1710083. 0.00
96.5200 0.00 -2.68E-07 7.32E-08 0.00 593.4697 3.16E+10
-3.80E-09 1710083. 0.00
97.7900 0.00 4.06E-07 2.70E-08 0.00 593.4697 3.16E+10
-2.26E-09 1710083. 0.00
99.0600 0.00 5.56E-07 1.84E-09 0.00 593.4697 3.16E+10
-1.05E-09 1710083. 0.00
100.3300 0.00 4.62E-07 -8.38E-09 0.00 593.4697 3.16E+10
-2.94E-10 1710083. 0.00
101.6000 0.00 3.01E-07 -1.00E-08 0.00 593.4697 3.16E+10
7.60E-11 1710083. 0.00
102.8700 0.00 1.56E-07 -7.96E-09 0.00 593.4697 3.16E+10
1.98E-10 1710083. 0.00
104.1400 0.00 5.81E-08 -4.98E-09 0.00 593.4697 3.16E+10
1.92E-10 1710083. 0.00
105.4100 0.00 4.40E-09 -2.48E-09 0.00 593.4697 3.16E+10
1.37E-10 1710083. 0.00
106.6800 0.00 -1.75E-08 -8.40E-10 0.00 593.4697 3.16E+10
7.85E-11 1710083. 0.00
107.9500 0.00 -2.12E-08 2.19E-11 0.00 593.4697 3.16E+10
3.46E-11 1710083. 0.00
109.2200 0.00 -1.69E-08 3.49E-10 0.00 593.4697 3.16E+10
8.26E-12 1710083. 0.00
110.4900 0.00 -1.06E-08 3.80E-10 0.00 593.4697 3.16E+10
-4.16E-12 1710083. 0.00
111.7600 0.00 -5.30E-09 2.89E-10 0.00 593.4697 3.16E+10
-7.82E-12 1710083. 0.00
113.0300 0.00 -1.81E-09 1.75E-10 0.00 593.4697 3.16E+10
-7.11E-12 1710083. 0.00
114.3000 0.00 2.84E-11 8.34E-11 0.00 593.4697 3.16E+10
-4.90E-12 1710083. 0.00
115.5700 0.00 7.30E-10 2.54E-11 0.00 593.4697 3.16E+10
-2.71E-12 1710083. 0.00
116.8400 0.00 8.02E-10 -3.91E-12 0.00 593.4697 3.16E+10
-1.13E-12 1710083. 0.00
118.1100 0.00 6.12E-10 -1.41E-11 0.00 593.4697 3.16E+10
0.00 1710083. 0.00
119.3800 0.00 3.73E-10 -1.41E-11 0.00 593.4697 3.16E+10
0.00 1710083. 0.00
120.6500 0.00 1.81E-10 -1.01E-11 0.00 593.4697 3.16E+10
0.00 1710083. 0.00
121.9200 0.00 6.34E-11 -5.67E-12 0.00 593.4697 3.16E+10

```
0.00   1710083.       0.00
  123.1900       0.00   8.61E-12  -2.23E-12       0.00   593.4697   3.16E+10
0.00   1710083.       0.00
  124.4600       0.00  -4.66E-12       0.00       0.00   593.4697   3.16E+10
0.00   1710083.       0.00
  125.7300       0.00       0.00       0.00       0.00   593.4697   3.16E+10
0.00   1710083.       0.00
  127.0000       0.00       0.00       0.00       0.00   593.4697   3.16E+10
0.00       0.00       0.00

* This analysis computed pile response using nonlinear moment-curvature rela-
  tionships. Values of total stress due to combined axial and bending stresses
  are computed only for elastic sections only and do not equal the actual
  stresses in concrete and steel. Stresses in concrete and steel may be inter-
  polated from the output for nonlinear bending properties relative to the
  magnitude of bending moment developed in the pile.


Output Summary for Load Case No. 1:

Pile-head deflection             =    -1.28000000 inches
Computed slope at pile head      =     0.00647424 radians
Maximum bending moment           =       5501189. inch-lbs
Maximum shear force              =       -127631. lbs
Depth of maximum bending moment  =       0.000000 feet below pile head
Depth of maximum shear force     =       0.000000 feet below pile head
Number of iterations             =              9
Number of zero deflection points =             13


--------------------------------------------------------------------------------
            Summary of Pile-head Responses for Conventional Analyses
--------------------------------------------------------------------------------

Definitions of Pile-head Loading Conditions:

Load Type 1: Load 1 = Shear, V, lbs, and Load 2 = Moment, M, in-lbs
Load Type 2: Load 1 = Shear, V, lbs, and Load 2 = Slope, S, radians
Load Type 3: Load 1 = Shear, V, lbs, and Load 2 = Rot. Stiffness, R, in-lbs/rad.
Load Type 4: Load 1 = Top Deflection, y, inches, and Load 2 = Moment, M, in-lbs
Load Type 5: Load 1 = Top Deflection, y, inches, and Load 2 = Slope, S, radians


Load Load                Load                  Axial    Pile-head  Pile-head  Max
Shear Max Moment
Case Type   Pile-head    Type     Pile-head   Loading  Deflection  Rotation    in
Pile    in Pile
 No.  1      Load 1       2        Load 2       lbs      inches     radians      lbs
     in-lbs
---- ----- ---------- ---------- ---------- ---------- ---------- ----------
```

```
---------- ----------
  1  y, in    -1.2800  M, in-lb    5501189.     16780.    -1.2800    0.00647
-127631.   5501189.


Maximum pile-head deflection = -1.2800000000 inches
Maximum pile-head rotation   = 0.0064742364 radians = 0.370946 deg.

--------------------------------------------------------------------------------
                           Summary of Warning Messages
--------------------------------------------------------------------------------

The following warning was reported 9 times

**** Warning - Possible Input Data Error ****

The input value for k_rm used by the weak rock criteria is greater than
0.0005. This value is outside the recommended range of 0.00005 to 0.0005.
Please check your input data for accuracy.

The following warning was reported 9 times


**** Warning ****

An unreasonable input value for unconfined compressive strength has been
specified for a soil defined using the weak rock criteria. The input value
is greater than 500 psi. Please check your input data for correctness.


The analysis ended normally.
```

APPENDIX D.2 – CENTER PIER

TABLE OF CONTENTS

FOUNDATION LOADS **272**

SOIL PROFILE **280**

PILE DESIGN CALCULATIONS **285**

FIXED CASE 286

PINNED CASE 300

PILE FOUNDATION ANALYSIS **314**

SUMMARY OF GROUP RESULTS 315

P-MULTIPLIERS 317

GROUP ANALYSIS 319

PILE HEAD FIXED CASE INPUT 320

PILE HEAD FIXED CASE OUTPUT 340

PILE HEAD PINNED CASE INPUT 467

PILE HEAD FIXED CASE OUTPUT 487

DEPTH TO FIXITY 614

FOUNDATION LOADS

Engineering and Land Surveying, P.C.

Project:	**Replacement of Malden Turnpike (CR34) Bridge over I-87**		
Contract No.	A72190	P.I.N.	
Sheet No.		of	
Calculated By:	AR	Date:	08/27/25
Checked By:		Date:	

LOAD COMBINATIONS - FORCES AT BOTTOM OF FOOTING

UNFACTORED LOADS

Comment	Type	Vertical	Horizontal		Moment		
		F_z	F_y	F_x	M_x	M_y	M_z
		KIP	KIP	KIP	K-FT	K-FT	K-FT
Pier	DC	505.32	0.00	0.00	0.00	0.00	0.00
Superstructure	DC	1169.40	0.00	0.00	0.00	0.00	0.00
Superstructure	DW	94.00	0.00	0.00	0.00	0.00	0.00
Soil	EV	36.23	0.00	0.00	0.00	0.00	0.00
Braking	BR	0.00	0.00	0.00	0.00	0.00	0.00
Temperature	TU	0.00	30.91	0.00	-688.45	0.00	0.00
Strength III	WS_{super}	0.00	-33.21	41.60	739.58	1098.98	0.00
Strength V	WS_{super}	0.00	-16.07	20.13	357.90	531.83	0.00
Service I	WS_{super}	0.00	-12.30	15.41	274.02	407.18	0.00
Strength III	WS_{sub}	0.00	31.49	2.97	-413.63	39.00	0.00
Strength V	WS_{sub}	0.00	15.24	1.44	-200.17	18.87	0.00
Service I	WS_{sub}	0.00	11.67	1.10	-153.25	14.45	0.00
Serv1/StrV	WL	0.00	14.56	11.40	-324.25	376.90	0.00
Strength III	WS_{VERT}	-99.75	0.00	0.00	0.00	698.25	0.00
Centrifugal	CE	0.00	0.00	0.00	0.00	0.00	0.00

PLUS LIVE LOAD LOAD CASES

Case 1a	LL	218.12	0.00	0.00	0.00	2399.34	0.00
Case 1b	LL	363.54	0.00	0.00	0.00	1817.68	0.00

Engineering and Land Surveying, P.C.

Project:	**Replacement of Malden Turnpike (CR34) Bridge over I-87**		
Contract No.	A72190	P.I.N.	
Sheet No.		of	
Calculated By:	AR	Date:	08/27/25
Checked By:		Date:	

LOAD COMBINATIONS - FORCES AT BOTTOM OF FOOTING

SERVICE I

Comment	Type	Vertical	Horizontal		Moment			Load Factor
		F_z	F_y	F_x	M_x	M_y	M_z	
		KIP	KIP	KIP	K-FT	K-FT	K-FT	
Pier	DC	505.32	0.00	0.00	0.00	0.00	0.00	1
Superstructure	DC	1169.40	0.00	0.00	0.00	0.00	0.00	1
Superstructure	DW	94.00	0.00	0.00	0.00	0.00	0.00	1
Soil	EV	36.23	0.00	0.00	0.00	0.00	0.00	1
Braking	BR	0.00	0.00	0.00	0.00	0.00	0.00	1
Temperature	TU	0.00	30.91	0.00	-688.45	0.00	0.00	1
Strength III	WS_{super}	0.00	0.00	0.00	0.00	0.00	0.00	0
Strength V	WS_{super}	0.00	0.00	0.00	0.00	0.00	0.00	0
Service I	WS_{super}	0.00	-12.30	15.41	274.02	407.18	0.00	1
Strength III	WS_{sub}	0.00	0.00	0.00	0.00	0.00	0.00	0
Strength V	WS_{sub}	0.00	0.00	0.00	0.00	0.00	0.00	0
Service I	WS_{sub}	0.00	11.67	1.10	-153.25	14.45	0.00	1
Serv1/StrV	WL	0.00	14.56	11.40	-324.25	376.90	0.00	1
Strength III	WS_{VERT}	0.00	0.00	0.00	0.00	0.00	0.00	0
Centrifugal	CE	0.00	0.00	0.00	0.00	0.00	0.00	1
	Σ	1804.95	44.84	27.91	-891.93	798.54	0.00	
PLUS LIVE LOAD LOAD CASES								
Case 1a	LL	218.12	0.00	0.00	0.00	2399.34	0.00	1
	Σ	**2023.07**	**44.84**	**27.91**	**-891.93**	**3197.88**	**0.00**	
Case 1b	LL	363.54	0.00	0.00	0.00	1817.68	0.00	1
	Σ	**2168.48**	**44.84**	**27.91**	**-891.93**	**2616.22**	**0.00**	

Engineering and Land Surveying, P.C.

Project:	**Replacement of Malden Turnpike (CR34) Bridge over I-87**		
Contract No.	A72190	P.I.N.	
Sheet No.		of	
Calculated By:	AR	Date:	08/27/25
Checked By:		Date:	

LOAD COMBINATIONS - FORCES AT BOTTOM OF FOOTING

STRENGTH I - MAX

Comment	Type	Vertical	Horizontal		Moment			Load Factor
		F_z	F_y	F_x	M_x	M_y	M_z	
		KIP	KIP	KIP	K-FT	K-FT	K-FT	
Pier	DC	631.65	0.00	0.00	0.00	0.00	0.00	1.25
Superstructure	DC	1461.75	0.00	0.00	0.00	0.00	0.00	1.25
Superstructure	DW	141.00	0.00	0.00	0.00	0.00	0.00	1.5
Soil	EV	48.90	0.00	0.00	0.00	0.00	0.00	1.35
Braking	BR	0.00	0.00	0.00	0.00	0.00	0.00	1.75
Temperature	TU	0.00	30.91	0.00	-688.45	0.00	0.00	1
Strength III	WS_{super}	0.00	0.00	0.00	0.00	0.00	0.00	0
Strength V	WS_{super}	0.00	0.00	0.00	0.00	0.00	0.00	0
Service I	WS_{super}	0.00	0.00	0.00	0.00	0.00	0.00	0
Strength III	WS_{sub}	0.00	0.00	0.00	0.00	0.00	0.00	0
Strength V	WS_{sub}	0.00	0.00	0.00	0.00	0.00	0.00	0
Service I	WS_{sub}	0.00	0.00	0.00	0.00	0.00	0.00	0
Serv1/StrV	WL	0.00	0.00	0.00	0.00	0.00	0.00	0
Strength III	WS_{VERT}	0.00	0.00	0.00	0.00	0.00	0.00	0
Centrifugal	CE	0.00	0.00	0.00	0.00	0.00	0.00	1.75
	Σ	2283.30	30.91	0.00	-688.45	0.00	0.00	
PLUS LIVE LOAD LOAD CASES								
Case 1a	LL	381.71	0.00	0.00	0.00	4198.85	0.00	1.75
	Σ	**2665.02**	**30.91**	**0.00**	**-688.45**	**4198.85**	**0.00**	
Case 1b	LL	636.19	0.00	0.00	0.00	3180.95	0.00	1.75
	Σ	**2919.49**	**30.91**	**0.00**	**-688.45**	**3180.95**	**0.00**	

Engineering and Land Surveying, P.C.

Project:	**Replacement of Malden Turnpike (CR34) Bridge over I-87**		
Contract No.	A72190	P.I.N.	
Sheet No.		of	
Calculated By:	AR	Date:	08/27/25
Checked By:		Date:	

LOAD COMBINATIONS - FORCES AT BOTTOM OF FOOTING

STRENGTH I - MIN DL

Comment	Type	Vertical	Horizontal		Moment			Load Factor
		F_z	F_y	F_x	M_x	M_y	M_z	
		KIP	KIP	KIP	K-FT	K-FT	K-FT	
Pier	DC	454.79	0.00	0.00	0.00	0.00	0.00	0.9
Superstructure	DC	1052.46	0.00	0.00	0.00	0.00	0.00	0.9
Superstructure	DW	61.10	0.00	0.00	0.00	0.00	0.00	0.65
Soil	EV	36.23	0.00	0.00	0.00	0.00	0.00	1
Braking	BR	0.00	0.00	0.00	0.00	0.00	0.00	1.75
Temperature	TU	0.00	30.91	0.00	-688.45	0.00	0.00	1
Strength III	WS_{super}	0.00	0.00	0.00	0.00	0.00	0.00	0
Strength V	WS_{super}	0.00	0.00	0.00	0.00	0.00	0.00	0
Service I	WS_{super}	0.00	0.00	0.00	0.00	0.00	0.00	0
Strength III	WS_{sub}	0.00	0.00	0.00	0.00	0.00	0.00	0
Strength V	WS_{sub}	0.00	0.00	0.00	0.00	0.00	0.00	0
Service I	WS_{sub}	0.00	0.00	0.00	0.00	0.00	0.00	0
Serv1/StrV	WL	0.00	0.00	0.00	0.00	0.00	0.00	0
Strength III	WS_{VERT}	0.00	0.00	0.00	0.00	0.00	0.00	0
Centrifugal	CE	0.00	0.00	0.00	0.00	0.00	0.00	1.75
	Σ	1604.57	30.91	0.00	-688.45	0.00	0.00	
PLUS LIVE LOAD LOAD CASES								
Case 1a	LL	381.71	0.00	0.00	0.00	4198.85	0.00	1.75
	Σ	**1986.29**	**30.91**	**0.00**	**-688.45**	**4198.85**	**0.00**	
Case 1b	LL	636.19	0.00	0.00	0.00	3180.95	0.00	1.75
	Σ	**2240.76**	**30.91**	**0.00**	**-688.45**	**3180.95**	**0.00**	

Engineering and Land Surveying, P.C.

Project:	**Replacement of Malden Turnpike (CR34) Bridge over I-87**		
Contract No.	A72190	P.I.N.	
Sheet No.		of	
Calculated By:	AR	Date:	08/27/25
Checked By:		Date:	

LOAD COMBINATIONS - FORCES AT BOTTOM OF FOOTING

STRENGTH III

Comment	Type	Vertical	Horizontal		Moment			Load Factor
		F_z	F_y	F_x	M_x	M_y	M_z	
		KIP	KIP	KIP	K-FT	K-FT	K-FT	
Pier	DC	631.65	0.00	0.00	0.00	0.00	0.00	1.25
Superstructure	DC	1461.75	0.00	0.00	0.00	0.00	0.00	1.25
Superstructure	DW	141.00	0.00	0.00	0.00	0.00	0.00	1.5
Soil	EV	48.90	0.00	0.00	0.00	0.00	0.00	1.35
Braking	BR	0.00	0.00	0.00	0.00	0.00	0.00	0
Temperature	TU	0.00	30.91	0.00	-688.45	0.00	0.00	1
Strength III	WS_{super}	0.00	-33.21	41.60	739.58	1098.98	0.00	1
Strength V	WS_{super}	0.00	0.00	0.00	0.00	0.00	0.00	0
Service I	WS_{super}	0.00	0.00	0.00	0.00	0.00	0.00	0
Strength III	WS_{sub}	0.00	31.49	2.97	-413.63	39.00	0.00	1
Strength V	WS_{sub}	0.00	0.00	0.00	0.00	0.00	0.00	0
Service I	WS_{sub}	0.00	0.00	0.00	0.00	0.00	0.00	0
Serv1/StrV	WL	0.00	0.00	0.00	0.00	0.00	0.00	0
Strength III	WS_{VERT}	-99.75	0.00	0.00	0.00	698.25	0.00	1
Centrifugal	CE	0.00	0.00	0.00	0.00	0.00	0.00	0
	Σ	2183.55	29.19	44.57	-362.50	1836.23	0.00	

PLUS LIVE LOAD LOAD CASES

Case 1a	LL	0.00	0.00	0.00	0.00	0.00	0.00	0
	Σ	**2183.55**	**29.19**	**44.57**	**-362.50**	**1836.23**	**0.00**	
Case 1b	LL	0.00	0.00	0.00	0.00	0.00	0.00	0
	Σ	**2183.55**	**29.19**	**44.57**	**-362.50**	**1836.23**	**0.00**	

Engineering and Land Surveying, P.C.

Project:	**Replacement of Malden Turnpike (CR34) Bridge over I-87**		
Contract No.	A72190	P.I.N.	
Sheet No.		of	
Calculated By:	AR	Date:	08/27/25
Checked By:		Date:	

LOAD COMBINATIONS - FORCES AT BOTTOM OF FOOTING

STRENGTH IV

Comment	Type	Vertical	Horizontal		Moment			Load Factor
		F_z	F_y	F_x	M_x	M_y	M_z	
		KIP	KIP	KIP	K-FT	K-FT	K-FT	
Pier	DC	757.98	0.00	0.00	0.00	0.00	0.00	1.5
Superstructure	DC	1754.10	0.00	0.00	0.00	0.00	0.00	1.5
Superstructure	DW	141.00	0.00	0.00	0.00	0.00	0.00	1.5
Soil	EV	48.90	0.00	0.00	0.00	0.00	0.00	1.35
Braking	BR	0.00	0.00	0.00	0.00	0.00	0.00	0
Temperature	TU	0.00	30.91	0.00	-688.45	0.00	0.00	1
Strength III	WS_{super}	0.00	0.00	0.00	0.00	0.00	0.00	0
Strength V	WS_{super}	0.00	0.00	0.00	0.00	0.00	0.00	0
Service I	WS_{super}	0.00	0.00	0.00	0.00	0.00	0.00	0
Strength III	WS_{sub}	0.00	0.00	0.00	0.00	0.00	0.00	0
Strength V	WS_{sub}	0.00	0.00	0.00	0.00	0.00	0.00	0
Service I	WS_{sub}	0.00	0.00	0.00	0.00	0.00	0.00	0
Serv1/StrV	WL	0.00	0.00	0.00	0.00	0.00	0.00	0
Strength III	WS_{VERT}	0.00	0.00	0.00	0.00	0.00	0.00	0
Centrifugal	CE	0.00	0.00	0.00	0.00	0.00	0.00	0
	Σ	2701.98	30.91	0.00	-688.45	0.00	0.00	
PLUS LIVE LOAD LOAD CASES								
Case 1a	LL	0.00	0.00	0.00	0.00	0.00	0.00	0
	Σ	**2701.98**	**30.91**	**0.00**	**-688.45**	**0.00**	**0.00**	
Case 1b	LL	0.00	0.00	0.00	0.00	0.00	0.00	0
	Σ	**2701.98**	**30.91**	**0.00**	**-688.45**	**0.00**	**0.00**	

Engineering and Land Surveying, P.C.

Project:	**Replacement of Malden Turnpike (CR34) Bridge over I-87**		
Contract No.	A72190	P.I.N.	
Sheet No.		of	
Calculated By:	AR	Date:	08/27/25
Checked By:		Date:	

LOAD COMBINATIONS - FORCES AT BOTTOM OF FOOTING

STRENGTH V

Comment	Type	Vertical	Horizontal		Moment			Load Factor
		F_z	F_y	F_x	M_x	M_y	M_z	
		KIP	KIP	KIP	K-FT	K-FT	K-FT	
Pier	DC	631.65	0.00	0.00	0.00	0.00	0.00	1.25
Superstructure	DC	1461.75	0.00	0.00	0.00	0.00	0.00	1.25
Superstructure	DW	141.00	0.00	0.00	0.00	0.00	0.00	1.5
Soil	EV	48.90	0.00	0.00	0.00	0.00	0.00	1.35
Braking	BR	0.00	0.00	0.00	0.00	0.00	0.00	1.35
Temperature	TU	0.00	30.91	0.00	-688.45	0.00	0.00	1
Strength III	WS_{super}	0.00	0.00	0.00	0.00	0.00	0.00	0
Strength V	WS_{super}	0.00	-16.07	20.13	357.90	531.83	0.00	1
Service I	WS_{super}	0.00	0.00	0.00	0.00	0.00	0.00	0
Strength III	WS_{sub}	0.00	0.00	0.00	0.00	0.00	0.00	0
Strength V	WS_{sub}	0.00	15.24	1.44	-200.17	18.87	0.00	1
Service I	WS_{sub}	0.00	0.00	0.00	0.00	0.00	0.00	0
Serv1/StrV	WL	0.00	14.56	11.40	-324.25	376.90	0.00	1
Strength III	WS_{VERT}	0.00	0.00	0.00	0.00	0.00	0.00	0
Centrifugal	CE	0.00	0.00	0.00	0.00	0.00	0.00	1.35
	Σ	2283.30	44.64	32.97	-854.96	927.61	0.00	
PLUS LIVE LOAD LOAD CASES								
Case 1a	LL	294.46	0.00	0.00	0.00	3239.11	0.00	1.35
	Σ	**2577.77**	**44.64**	**32.97**	**-854.96**	**4166.72**	**0.00**	
Case 2a	LL	490.77	0.00	0.00	0.00	2453.87	0.00	1.35
	Σ	**2774.08**	**44.64**	**32.97**	**-854.96**	**3381.48**	**0.00**	

SOIL PROFILE

SM 282 E 12/02

NEW YORK STATE THRUWAY AUTHORITY
NEW YORK STATE CANAL CORPORATION

SUBSURFACE EXPLORATION LOG

PSN		BORNUM	B-2
DIVISION	Albany	**HOLE**	DN-B
COUNTY	Ulster	**LINE**	Median
PIN		**STA**	
ROUTE	Thruway Mainline	**OFFSET**	ft
MILEPOST	103.16	**SURF. ELEV.**	143.0341, NAD 88
PROJECT	Assignment 2 - NYSTA CR34 over Thruway Mainline Bridge Replacement	**DEPTH TO WATER**	

COORDINATES (Lat) 42.108540°N (Long) 73.957890°W

DATE START 3/26/2024 **DATE FINISH** 3/26/2024

AUGER						**WT OF HAMMER-CASING**		lb	**HAMMER FALL-CASING**		in
CASING	**O. D.**	4-1/2	in	**I. D.**	4	in	**WT OF HAMMER-SAMPLER**	140	lb	**HAMMER FALL-SAMPLER**	30	in
SAMPLER	**O. D.**	2	in	**I. D.**	1-3/8	in	**HAMMER TYPE**	Automatic				

CASING BLOWS/ft	DEPTH (ft.) BELOW SURFACE	SAMPLE NO.	BLOWS ON SAMPLER (in.) 0/6	6/12	12/18	18/24	MOIST. CONT. (%)	Soil Recovery (in.)	Rock Recovery (ft.)	DESCRIPTION OF SOIL AND ROCK	
	0.0									Pile Cap	LPL
											PL
											PL
	5.0			4	5	8				BOF = 138.53'	
		SS4	6	7	7	10	32.3%	24		Brown CLAY; trace f Sand; trace Silt	M - PL
										N_{avg} = 11, γ' = 125pcf, φ = 0deg, c = 1500psf	
		SS5	3	1	3	4	40.1%	13		Brown CLAY; trace f Sand; trace Silt	W - PL
										N_{avg} = 4, γ' = 120pcf, φ = 0deg, c = 500psf	
	10.0	SS6	WH/24"				49.1%	24		Grey CLAY; trace f Sand; trace Silt	W - PL
										Approx water elev. = 133.0'	
		SS7	WH/24"					24		Grey CLAY; trace f Sand; trace Silt	W - PL
		SS8	WH/24"					24		Grey CLAY; trace f Sand; trace Silt	W - PL
	15.0									N_{avg} = 0, γ' = 37.6pcf, φ = 0deg, c = 250psf	
		SS9	WH/24"					24		Grey CLAY; trace f Sand; trace Silt	W - PL
	20.0									HP14X117 Pile	
		SS10	WH/24"					24		Grey CLAY; trace f Sand; trace Silt	W - PL
	25.0										

The subsurface information shown here was obtained for design and estimate purposes. It is made available so that users may have access to the same information available to the State. It is presented in good faith. By the nature of the exploration process, the information represents only a small fraction of the total volume of the material at the site. Interpolation between data samples may not be indicative of the actual material encountered.

DRILL RIG OPERATOR Robert Drake; Michael Keleher
SOIL & ROCK DESCRIPTION Jesse O'Dell (ATL)
INSPECTOR Jesse O'Dell (ATL)
BIN
STRUCTURE NAME

CONTRACT D214866 **CONTRACTOR** ATL

SHEET 1 OF 4 HOLE DN-B

TWY-CAN SUBSURF EXPLORATION CD10733.JMT THRUWAY - SAUGERTIES.GPJ TWYSE1TMPL_V05.GDT 8/1/24

SM 282 E 12/02

NEW YORK STATE THRUWAY AUTHORITY
NEW YORK STATE CANAL CORPORATION

SUBSURFACE EXPLORATION LOG

PSN		BORNUM B-2	
DIVISION	Albany	**HOLE**	DN-B
COUNTY	Ulster	**LINE**	Median
PIN		**STA**	
ROUTE	Thruway Mainline	**OFFSET**	ft
MILEPOST	103.16	**SURF. ELEV.**	143.0341, NAD 88
PROJECT	Assignment 2 - NYSTA CR34 over Thruway Mainline Bridge Replacement	**DEPTH TO WATER**	

COORDINATES (Lat) 42.108540°N (Long) 73.957890°W

DATE START 3/26/2024 **DATE FINISH** 3/26/2024

AUGER						**WT OF HAMMER-CASING**		lb	**HAMMER FALL-CASING**		in
CASING	**O. D.**	4-1/2	in	**I. D.**	4	in	**WT OF HAMMER-SAMPLER**	140	lb	**HAMMER FALL-SAMPLER**	30 in
SAMPLER	**O. D.**	2	in	**I. D.**	1-3/8	in	**HAMMER TYPE**	Automatic			

CASING BLOWS/ft	DEPTH (ft.) BELOW SURFACE	SAMPLE NO.	BLOWS ON SAMPLER (in.) 0/6	6/12	12/18	18/24	MOIST. CONT. (%)	Soil Recovery (in.)	Rock Recovery (ft.)	DESCRIPTION OF SOIL AND ROCK	
	25.0										
		SS11	WH/24"					24		Grey CLAY; trace f Sand; trace Silt	W - PL
	30.0										
		SS12	WR/12"					24		Grey CLAY; trace f Sand; trace Silt	W - PL
	35.0				WH/12"						
										HP14X117 Pile	
		SS13	WR/18"					24		Grey CLAY; trace f Sand; trace Silt	W - PL
	40.0					WH					
		SS14	WR/18"					24		Grey CLAY; trace f Sand; trace Silt	W - PL
	45.0					WH					
		SS15	WR/18"					24		Grey CLAY; trace f Sand; trace Silt	W - PL
	50.0										

The subsurface information shown here was obtained for design and estimate purposes. It is made available so that users may have access to the same information available to the State. It is presented in good faith. By the nature of the exploration process, the information represents only a small fraction of the total volume of the material at the site. Interpolation between data samples may not be indicative of the actual material encountered.

DRILL RIG OPERATOR Robert Drake; Michael Keleher
SOIL & ROCK DESCRIPTION Jesse O'Dell (ATL)
INSPECTOR Jesse O'Dell (ATL)
BIN
STRUCTURE NAME

CONTRACT D214866 **CONTRACTOR** ATL

SHEET 2 OF 4 HOLE DN-B

TWY-CAN SUBSURF EXPLORATION CD10733.JMT THRUWAY - SAUGERTIES.GPJ TWYSE1TMPL_V05.GDT 8/1/24

SM 282 E 12/02

NEW YORK STATE THRUWAY AUTHORITY
NEW YORK STATE CANAL CORPORATION

SUBSURFACE EXPLORATION LOG

PSN		BORNUM B-2	
DIVISION	Albany	**HOLE**	DN-B
COUNTY	Ulster	**LINE**	Median
PIN		**STA**	
ROUTE	Thruway Mainline	**OFFSET**	ft
MILEPOST	103.16	**SURF. ELEV.**	143.0341, NAD 88
PROJECT	Assignment 2 - NYSTA CR34 over Thruway Mainline Bridge Replacement	**DEPTH TO WATER**	

COORDINATES (Lat) 42.108540°N (Long) 73.957890°W

DATE START 3/26/2024 **DATE FINISH** 3/26/2024

AUGER						**WT OF HAMMER-CASING**		lb	**HAMMER FALL-CASING**		in
CASING	**O. D.**	4-1/2	in	**I. D.**	4	in	**WT OF HAMMER-SAMPLER**	140	lb	**HAMMER FALL-SAMPLER**	30 in
SAMPLER	**O. D.**	2	in	**I. D.**	1-3/8	in	**HAMMER TYPE**	Automatic			

CASING BLOWS/ft	DEPTH (ft.) BELOW SURFACE	SAMPLE NO.	BLOWS ON SAMPLER (in.) 0/6	6/12	12/18	18/24	MOIST. CONT. (%)	Soil Recovery (in.)	Rock Recovery (ft.)	DESCRIPTION OF SOIL AND ROCK	
	50.0					WH					
		SS16	WR/18"					24		Grey CLAY; trace f Sand; trace Silt	W - PL
	55.0					WH					
		SH1								Grey CLAY; trace f Sand; trace Silt	W - PL
	60.0										
		SS17	WR/24"					24		Grey CLAY; trace f Sand; trace Silt	S - PL
	65.0										
		SS18	WR/24"					24		Grey CLAY; trace f Sand; trace Silt	S - PL
	70.0										
		SS19	WH	50/5"				5		Grey CLAY; and cf Gravel; some cmf Sand; trace Silt;	S - PL
	75.0										

HP14X117 Pile

The subsurface information shown here was obtained for design and estimate purposes. It is made available so that users may have access to the same information available to the State. It is presented in good faith. By the nature of the exploration process, the information represents only a small fraction of the total volume of the material at the site. Interpolation between data samples may not be indicative of the actual material encountered.

DRILL RIG OPERATOR Robert Drake; Michael Keleher
SOIL & ROCK DESCRIPTION Jesse O'Dell (ATL)
INSPECTOR Jesse O'Dell (ATL)
BIN
STRUCTURE NAME

CONTRACT D214866 **CONTRACTOR** ATL

SHEET 3 OF 4 HOLE DN-B

TWY-CAN SUBSURF EXPLORATION CD10733.JMT THRUWAY - SAUGERTIES.GPJ TWYSE1TMPL_V05.GDT 8/1/24

SM 282 E 12/02

NEW YORK STATE THRUWAY AUTHORITY
NEW YORK STATE CANAL CORPORATION

SUBSURFACE EXPLORATION LOG

PSN		BORNUM B-2	
DIVISION	Albany	**HOLE**	DN-B
COUNTY	Ulster	**LINE**	Median
PIN		**STA**	
ROUTE	Thruway Mainline	**OFFSET**	ft
MILEPOST	103.16	**SURF. ELEV.**	143.0341, NAD 88
PROJECT	Assignment 2 - NYSTA CR34 over Thruway Mainline Bridge Replacement	**DEPTH TO WATER**	

COORDINATES (Lat) 42.108540°N (Long) 73.957890°W

DATE START 3/26/2024 **DATE FINISH** 3/26/2024

AUGER						**WT OF HAMMER-CASING**		lb	**HAMMER FALL-CASING**		in
CASING	**O. D.**	4-1/2	in	**I. D.**	4	in	**WT OF HAMMER-SAMPLER**	140	lb	**HAMMER FALL-SAMPLER**	30 in
SAMPLER	**O. D.**	2	in	**I. D.**	1-3/8	in	**HAMMER TYPE**	Automatic			

HP14X117 Pile

CASING BLOWS/ft	DEPTH (ft.) BELOW SURFACE	SAMPLE NO.	BLOWS ON SAMPLER (in.) 0/6 6/12 12/18 18/24	MOIST. CONT. (%)	Soil Recovery (in.)	Rock Recovery (ft.)	DESCRIPTION OF SOIL AND ROCK
	75.0						Possible WEATHERED BEDROCK Encountered possible WEATHERED ROCK at 74.4 feet. Advanced 3 7/8" tri-cone roller bit to 79.0 feet and began coring.
		RUN1					Black SHALE 57" or 95% Recovery 6 Pieces (54") - 5.2% Chips and Fragments 5 Pieces longer than 4" (51") - RQD = 85% SHALE, γ' = 87.6pcf, qu = 15,000 psi
	80.0						BOTTOM OF HOLE AT 84.00 ft

Assumed Top of Sound Rock

Notes:
1. Borehole backfilled with on-site soils.

DATE	TIME	DEPTH (ft.) HOLE	CASING	WATER	ARTESIAN HEAD HEIGHT ABOVE GROUND	FILLED WITH WATER AT END OF DAY
26-Mar-24	08:40	10.00	10.00	6.00		
26-Mar-24	09:30	26.00	10.00	6.00		
26-Mar-24	14:10	79.00	10.00	10.80		
26-Mar-24	15:10	84.00	10.00	13.00		
26-Mar-24	15:15	84.00	OPEN	13.00		

The subsurface information shown here was obtained for design and estimate purposes. It is made available so that users may have access to the same information available to the State. It is presented in good faith. By the nature of the exploration process, the information represents only a small fraction of the total volume of the material at the site. Interpolation between data samples may not be indicative of the actual material encountered.

DRILL RIG OPERATOR Robert Drake; Michael Keleher
SOIL & ROCK DESCRIPTION Jesse O'Dell (ATL)
INSPECTOR Jesse O'Dell (ATL)
BIN
STRUCTURE NAME

CONTRACT D214866 **CONTRACTOR** ATL

SHEET 4 OF 4 HOLE DN-B

TWY-CAN SUBSURF EXPLORATION CD10733.JMT THRUWAY - SAUGERTIES.GPJ TWYSE1TMPL_V05.GDT 8/1/24

PILE DESIGN CALCULATIONS

FIXED CASE

PINNED CASE

PILE DESIGN CALCULATIONS

FIXED CASE

PINNED CASE

References:

1. AASHTO LRFD Bridge Design Specifications, 19th Edition, 2020
2. NYSDOT LRFD Bridge Design Specifications - 2021
3. NYSDOT Geotechnical Design Manual
4. NYSDOT Bridge Manual - 2021

Pile Design Calculations (Fixed Case)

Color Key

Input | Intermediate results | Recalling previously established value | Final Result

Bridge Geometry and Pile properties

$e_{pile} := 1.5 \cdot ft$ (Edge distance of pile, NYSDOT BM 11.1.4.2)

H Pile Section: ***HP14x117***

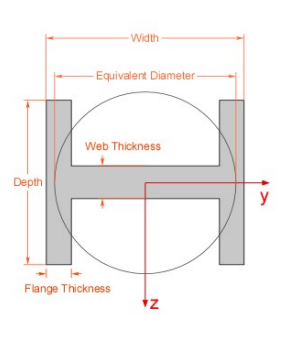

$b_s := 14.9 \cdot in$ (Width)

$d_s := 14.2 \cdot in$ (Depth)

$t_{fs} := 0.805 \cdot in$ (Flange thickness)

$t_{ws} := 0.805 \cdot in$ (Web thickness)

Substract 1/16" all around these dimensions to account for corrosion.

$b'_s := b_s - 2 \cdot \left(\frac{1}{16}\right) \cdot in$ $b'_s = 14.78\ in$

$d'_s := d_s - 2 \cdot \left(\frac{1}{16}\right) \cdot in$ $d'_s = 14.08\ in$

$t'_{fs} := t_{fs} - 2 \cdot \left(\frac{1}{16}\right) \cdot in$ $t'_{fs} = 0.68\ in$

$t'_{ws} := t_{ws} - 2 \cdot \left(\frac{1}{16}\right) \cdot in$ $t'_{ws} = 0.68\ in$

$d_{eq} := d'_s - 2 \cdot \frac{t'_{fs}}{2} = 13.4\ in$ (Equivalent diameter of pile)

$P := 2 \cdot (b'_s + d'_s) = 4.81\ ft$ (Perimeter of pile section)

$A_T := b'_s \cdot d'_s = 207.96\ in^2$ (Tip area of pile section)

$S_y := 4.5\ ft + 0\ in = 4.5\ ft$ (Spacing of Piles in Y direction)

$S_z := 7\ ft + 6\ in = 7.5\ ft$ (Spacing of Piles in Z direction)

$S_{min} := 3 \cdot d_s = 3.55\ ft$ (Minimum Pile Spacing, NYSDOT GDM Sec. 11.9.2.1)

$Check_1 :=$ if $min(S_y, S_z) \geq S_{min}$ "Pile Spacing is OKAY" else "Pile Spacing is NOT OKAY" = "Pile Spacing is OKAY"

$L_{emb} := 76\ ft$ (Pile embedment depth)

$L_{by} := 23.6 \cdot ft$ (Depth to fixity of pile, from GROUP Analysis)

$L_{bz} := 25.4 \cdot ft$ (Depth to fixity of pile, from GROUP Analysis)

$K_e := 0.65$ (Effective length factor, AASHTO Table C4.6.2.5-1, Case a)

$E := 29000 \cdot ksi$ (Modulus of Elasticity)

$F_y := 50 \cdot ksi$ (Yield stress)

$A_{pile} := 2 \cdot t'_{fs} \cdot b'_s + t'_{ws} \cdot (d'_s - 2 \cdot t'_{fs})$ (Cross sectional area of pile) $A_{pile} = 28.74\ in^2$

Pile Applied loads

(See Summary of GROUP Results)

$P_u := 234.4 \cdot kip$ (Axial load on each pile under STR combination)

$V_y := 16.279\ kip$ (Max. factored shear in Pile in Y axis)

$V_z := 5.3\ kip$ (Max. factored shear in Pile in Z axis)

$V_u := \sqrt{V_y^2 + V_z^2} = 17.12\ kip$ (Max. resultant shear in Pile)

$M_{uy} := 136\ kip \cdot in$ (Factored applied moment about pile weak axis)

$M_{uz} := 629.3\ kip \cdot in$ (Factored applied moment about pile strong axis)

Geotechnical Design of Pile

$q_u := 15000 \cdot psi$ (Nominal bearing resistance on rock)

Use Hard-Bite Point Model: *HP-77750-B* Pile shoe:

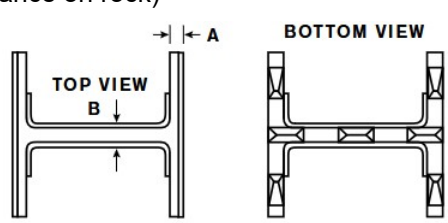

$A' := 1\ in - 2 \cdot \frac{1}{16}\ in = 0.88\ in$ $B' := 1.625\ in - 2 \cdot \frac{1}{16}\ in = 1.5\ in$

$A_{pile_Shoe} := 2 \cdot b'_s \cdot A' + (d'_s - 2 \cdot A') \cdot B' = 44.34\ in^2$ (Bearing area of pile shoe)

Nominal axial capacity of pile:

$P_{ng} := (q_u \cdot A_{pile_Shoe})$ $\qquad P_{ng} = 665\ kip$

Limiting geotechnical axial capacity of pile in compression due to drivability concerns (NYSDOT GDM 11.9.2.7.6)

No allowance for corrosion considered in the pile cross sectional area at the time of driving.

$A_{pile_no_corrosion} := 2 \cdot t_{fs} \cdot b_s + t_{ws} \cdot (d_s - 2 \cdot t_{fs}) = 34.12\ in^2$ (Pile area without consideration for corrosion)

$P_{limit_g} := 0.5 \cdot F_y \cdot (A_{pile_no_corrosion}) = 853\ kip$

Controlling nominal Geotech capacity in compression:

$P_{nominal} := min(P_{ng}, P_{limit_g}) = 665\ kip$

$\phi_{a_g} := 0.6$ (Resistance factor based on PDA testing, NYSDOT GDM 11.9.2.7.6)

Factored Geotech capacity in compression:

$P_{rg} := \phi_{a_g} \cdot P_{nominal} = 399\ kip$

Demand Capacity ratio for geotechnical axial capacity of Pile

$DC_{a_g} := \frac{P_u}{P_{rg}} = 0.59$

```
Check3 := | if DC_a_g < 1.0
          |   | "Good. Geotechnical axial capacity of pile meets the demand"
          | else
          |   | "Not Good. Geotechnical axial capacity of pile isn't sufficient"
```

$Check_3 =$ "Good. Geotechnical axial capacity of pile meets the demand"

Structural Design of Pile

Pile Section Properties:

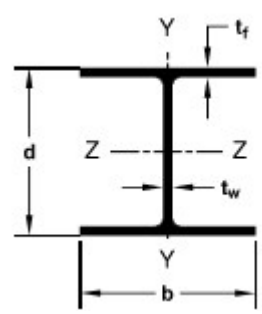

$b := b'_s$ (Width of flange) $\qquad b = 14.78\ in$

$d := d'_s$ (Depth of section) $\qquad d = 14.08\ in$

$t_f := t'_{fs}$ (Thickness of flange) $\qquad t_f = 0.68\ in$

$t_w := t'_{ws}$ (Thickness of web) $\qquad t_w = 0.68\ in$

$h_w := d - 2 \cdot t_f$ (Height of web) $\qquad h_w = 12.72\ in$

$A_s := 2 \cdot t_f \cdot b + t_w \cdot h_w$ (Area of section) $A_s = 28.74\ in^2$

$I_y := \frac{t_f \cdot b^3}{6} + \frac{h_w \cdot t_w^3}{12}$ (Moment of inertia about y axis) $I_y = 365.88\ in^4$

$S_y := \frac{I_y}{\left(\frac{b}{2}\right)}$ (Elastic Section modulus about y axis) $S_y = 49.53\ in^3$

$Z_y := \frac{t_f \cdot b^2}{2} + \frac{h_w \cdot t_w^2}{4}$ (Plastic section modulus about y axis) $Z_y = 75.69\ in^3$

$r_y := \sqrt{\frac{I_y}{A_s}}$ (Radius of gyration about y axis) $r_y = 3.57\ in$

$I_z := \frac{b \cdot d^3}{12} - \frac{(b - t_w) \cdot h_w^3}{12}$ (Moment of inertia about z axis) $I_z = 1018.61\ in^4$

$S_z := \frac{I_z}{\left(\frac{d}{2}\right)}$ (Elastic section modulus about z axis) $S_z = 144.74\ in^3$

$Z_z := \frac{b \cdot d^2}{4} - \frac{(b - t_w) \cdot h_w^2}{4}$ (Plastic section modulus about z axis) $Z_z = 162.06\ in^3$

$r_z := \sqrt{\frac{I_z}{A_s}}$ (Radius of gyration about z axis) $r_z = 5.95\ in$

$\lambda_y := \frac{K_e \cdot L_{by}}{r_y}$ (Slenderness ratio of pile with respect to y axis) $\lambda_y = 52$

$\lambda_z := \frac{K_e \cdot L_{bz}}{r_z}$ (slenderness ratio of pile with respect to z axis) $\lambda_z = 33$

$\lambda_{limit} := 120$ (Limiting slenderness ratio, AASHTO Sec. 6.9.3)

$Check_4 :=$
```
if λz < λlimit ∧ λy < λlimit
    "Good. Slenderness ratio within the limit"
else
    "Not Good. Slenderness ratio outside the limit"
```

$Check_4 =$ "Good. Slenderness ratio within the limit"

Axial Capacity of Pile Section

Check slenderness of section in compression (AASHTO Sec. 6.9.4.2.1)

$\lambda_{rf} := 0.56 \cdot \sqrt{\frac{E}{F_y}}$ (Limiting slenderness ratio of flange) $\lambda_{rf} = 13.49$

$\lambda_{rw} := 1.49 \cdot \sqrt{\frac{E}{F_y}}$ (Limiting slenderness ratio of web) $\lambda_{rw} = 35.88$

$\lambda_f := \frac{\left(\frac{b}{2}\right)}{t_f}$ (Slenderness ratio of flange) $\lambda_f = 10.86$

$\lambda_w := \frac{h_w}{t_w}$ (slenderness ratio of web) $\lambda_w = 18.7$

$Slenderness :=$ if $\lambda_f < \lambda_{rf} \wedge \lambda_w < \lambda_{rw}$
"Non-slender section. Local buckling effects can be neglected"
else
"Slender section. Local buckling effects needs to be considered"

$Slenderness =$ "Non-slender section. Local buckling effects can be neglected"

Elastic critical buckling resistance based on flexural buckling (AASHTO Sec. 6.9.4.1.2)

$P_{ef} := \frac{\pi^2 \cdot E}{(\max(\lambda_z, \lambda_y))^2} \cdot A_s$ $P_{ef} = 3090\ kip$

Elastic critical buckling resistance based on torsional buckling (AASHTO Sec. 6.9.4.1.3)

$J_s := \frac{2 \cdot b \cdot t_f^3 + (d - t_f) \cdot t_w^3}{3}$ (St. Venant Constant) $J_s = 4.5\ in^4$

$C_w := \frac{I_y \cdot d^2}{4}$ (Warping torsional constant, AASHTO C6.9.4.1.3) $C_w = 18121\ in^6$

$KL := K_e \cdot \max(L_{by}, L_{bz})$ (Effective length for torsional buckling) $KL = 16.51\ ft$

$G' := 0.385 \cdot E = 11165\ ksi$ (Shear modulus, AASHTO Sec. 6.9.4.1.3)

$P_{eft} := \left(\frac{\pi^2 \cdot E \cdot C_w}{(KL)^2} + G' \cdot J_s\right) \cdot \frac{A_s}{I_y + I_z}$ $P_{eft} = 3786\ kip$

$P_e := min(P_{ef}, P_{eft})$ (Controlling Pe) $P_e = 3090\ kip$

Nominal Yield resistance (AASHTO Sec 6.9.4.1.1)

$P_o := F_y \cdot A_s$ $\qquad P_o = 1437\ kip$

Nominal Compressive resistance (AASHTO Sec. 6.9.4.1.1)

$$P_n := \begin{cases} \left(0.658^{\left(\frac{P_o}{P_e}\right)}\right) \cdot P_o & \text{if } \frac{P_o}{P_e} \le 2.25 \\ 0.877 \cdot P_e & \text{else} \end{cases}$$

$P_n = 1183\ kip$

$\phi_c := 0.6$ (Resistance factor for pile in compression, AASHTO 6.5.4.2)

$P_r := \phi_c \cdot P_n$ (Factored axial capacity of pile in compression) $\qquad P_r = 710\ kip$

Demand Capacity ratio for axial structural strength of Pile:

$DC_a := \frac{P_u}{P_r}$ $\qquad DC_a = 0.33$

$$Check_5 := \begin{cases} \text{"Good. Axial structural capacity of pile exceeds the demand"} & \text{if } DC_a < 1 \\ \text{"Not Good. Axial structural capacity is less than the demand"} & \text{else} \end{cases}$$

$Check_5 =$ "Good. Axial structural capacity of pile exceeds the demand"

Flexural Capacity of Pile about strong axis (AASHTO 6.10.8)

The flexural capacity of the pile about the strong axis is the minimum of capacities obtained by the following three criteria

1. Compression flange local buckling
2. Compression flange lateral torsional buckling
3. Tension flange Yielding

1. Compression flange local buckling (AASHTO 6.10.8.2.2)

$\lambda_f = 10.86$

$F_{yr} := 0.7 \cdot F_y = 35\ ksi$

$\lambda_{pf} := 0.38 \cdot \sqrt{\frac{E}{F_y}}$ $\qquad \lambda_{pf} = 9.15$

$\lambda_{rf} := 0.56 \cdot \sqrt{\frac{E}{F_{yr}}}$

$R_b := 1$ (Web load shedding factor, taken as 1.0)

$R_h := 1$ (Hybrid factor, taken as 1.0)

$$F_{nc_1} := \begin{cases} R_b \cdot R_h \cdot F_y & \text{if } \lambda_f \le \lambda_{pf} \\ \left(1 - \left(1 - \frac{F_{yr}}{R_h \cdot F_y}\right) \cdot \left(\frac{\lambda_f - \lambda_{pf}}{\lambda_{rf} - \lambda_{pf}}\right)\right) \cdot R_b \cdot R_h \cdot F_y & \text{else} \end{cases}$$

$F_{nc_1} = 46\ ksi$

2. <u>Compression flange lateral-torsional buckling (AASHTO 6.10.8.2.3)</u>

$L_b := L_{bz}$ $L_b = 304.8\ in$

To find the depth of web in compression Dc, calculate the total compressive and tensile stresses due to axial load and bending.

$f_c := \frac{P_u}{A_s} + \frac{M_{uz}}{S_z}$ $f_c = 12.5\ ksi$

$f_t := -\left(\frac{P_u}{A_s}\right) + \frac{M_{uz}}{S_z}$ $f_t = -3.81\ ksi$

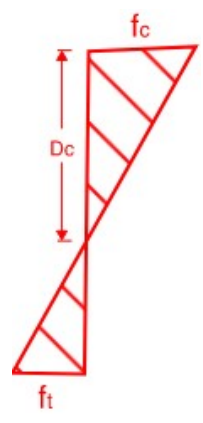

$$D_c := \begin{cases} h_w & \text{if } f_t < 0 \\ \frac{f_c}{f_c + f_t} \cdot d - t_f & \text{else} \end{cases}$$

$D_c = 12.72\ in$

$r_t := \frac{b}{\sqrt{12 \cdot \left(1 + \frac{1}{3} \cdot \frac{D_c \cdot t_w}{b \cdot t_f}\right)}}$ (Effective radius of gyration for lateral-torsional buckling) $r_t = 3.76\ in$

$C_b := 1.0$ (Moment gradient modifier, taken as 1.0 for simplicity)

$F_{cr} := \frac{C_b \cdot R_b \cdot \pi^2 \cdot E}{\left(\frac{L_b}{r_t}\right)^2}$ (Elastic lateral-torsional buckling stress) $F_{cr} = 44\ ksi$

$L_p := r_t \cdot \sqrt{\frac{E}{F_y}}$ $L_p = 91\ in$

$L_r := \pi \cdot r_t \cdot \sqrt{\frac{E}{F_{yr}}}$ $L_r = 340\ in$

$$F_{nc_2} := \begin{cases} R_b \cdot R_h \cdot F_y & \text{if } L_b \le L_p \\ \min\left(C_b \cdot \left(1 - \left(1 - \frac{F_{yr}}{R_h \cdot F_y}\right) \cdot \left(\frac{L_b - L_p}{L_r - L_p}\right)\right) \cdot R_b \cdot R_h \cdot F_y, R_b \cdot R_h \cdot F_y\right) & \text{also if } L_p < L_b \le L_r \\ \min\left(F_{cr}, R_b \cdot R_h \cdot F_y\right) & \text{else} \end{cases}$$

$F_{nc_2} = 37\ ksi$

3. Tension flange Yielding (AASHTO 6.10.8.3)

$F_{nt} := R_h \cdot F_y$ $\qquad F_{nt} = 50\ ksi$

Nominal moment capacity of the pile section about strong axis:

$M_{nz} := S_z \cdot \min\left(F_{nc_1}, F_{nc_2}, F_{nt}\right)$ $\qquad M_{nz} = 448\ kip \cdot ft$

$\phi_f := 1$ (Resistance factor for bending, AASHTO 6.5.4.2)

$M_{rz} := \phi_f \cdot M_{nz}$ $\qquad M_{rz} = 448\ kip \cdot ft$

Demand Capacity ratio for flexural strength of Pile:

$DC_f := \frac{M_{uz}}{M_{rz}}$ $\qquad DC_f = 0.12$

$$Check_{6a} := \begin{cases} \text{"Good. Moment capacity of the section is sufficient"} & \text{if } DC_f < 1 \\ \text{"Not Good. Moment capacity of the section is not sufficient"} & \text{else} \end{cases}$$

$Check_{6a} =$ "Good. Moment capacity of the section is sufficient"

Flexural Capacity of Pile about weak axis (AASHTO 6.12.2.2-1)

$\lambda_{rf} := 0.83 \cdot \sqrt{\frac{E}{F_y}} = 19.99$ $\qquad \lambda_{pf} = 9.15$

$$M_{ny} := \begin{cases} F_y \cdot Z_y & \text{if } \lambda_f \le \lambda_{pf} \\ \left(1 - \left(1 - \frac{S_y}{Z_y}\right) \cdot \left(\frac{\lambda_f - \lambda_{pf}}{0.45 \cdot \sqrt{\frac{E}{F_y}}}\right)\right) \cdot F_y \cdot Z_y & \text{else if } \lambda_{pf} < \lambda_f \le \lambda_{rf} \end{cases} = 298.16\ kip \cdot ft$$

$M_{ry} := \phi_f \cdot M_{ny} = 298.16\ kip \cdot ft$

Demand Capacity ratio for flexural strength of Pile:

$DC_{f_w} := \frac{M_{uy}}{M_{ry}} = 0.04$ $\qquad DC_{f_w} = 0.04$

$Check_{6b} :=$ if $DC_f < 1$ "Good. Moment capacity of the section is sufficient" else "Not Good. Moment capacity of the section is not sufficient"

$Check_{6b} =$ "Good. Moment capacity of the section is sufficient"

Shear Capacity of Pile (AASHTO 6.10.9.2)

$V_p := 0.58 \cdot F_y \cdot h_w \cdot t_w$ $\qquad V_p = 251\ kip$

$K' := 5$

$C' :=$ if $\frac{h_w}{t_w} \le 1.12 \cdot \sqrt{\frac{E \cdot K'}{F_y}}$ $\quad 1.0$

also if $1.12 \cdot \sqrt{\frac{E \cdot K'}{F_y}} < \frac{h_w}{t_w} \le 1.40 \cdot \sqrt{\frac{E \cdot K'}{F_y}}$ $\quad \frac{1.12}{\left(\frac{h_w}{t_w}\right)} \cdot \sqrt{\frac{E \cdot K'}{F_y}}$

else $\quad \frac{1.57}{\left(\frac{h_w}{t_w}\right)^2} \cdot \left(\frac{E \cdot K'}{F_y}\right)$ $\qquad C' = 1$

Nominal shear capacity:

$V_n := C' \cdot V_p$ $\qquad V_n = 251\ kip$

$\phi_v := 1.0$ $\qquad$ (Resistance factor for shear, AASHTO Sec. 6.5.4.2)

$V_r := \phi_v \cdot V_n$ $\qquad V_r = 251\ kip$

Demand Capacity ratio for Shear Strength of Pile:

$DC_v := \frac{V_u}{V_r}$ $\qquad DC_v = 0.07$

$$Check_7 := \left\| \begin{array}{l} \text{if } DC_v < 1 \\ \quad \text{"Good. Shear capacity of the section is sufficient"} \\ \text{else} \\ \quad \text{"Not Good. Shear capacity of the section isn't sufficient"} \end{array} \right. = \text{"Good. Shear capacity of the section is sufficient"}$$

Interaction with flexural Shear: (AASHTO 6.9.2.2)

$$\frac{P_u}{P_r} = 0.33$$

$$Shear_{Interaction} := \left\| \begin{array}{l} \text{if } \frac{P_u}{P_r} > 0.05 \\ \quad \text{"Interaction with flexural shear needs to be considered"} \\ \text{else} \\ \quad \text{"Interaction with flexural shear does not need to be considered"} \end{array} \right.$$

$Shear_{Interaction} =$ "Interaction with flexural shear needs to be considered"

Per AASHTO 6.9.2.2.2, for I-Section members, the cross section shear stresses due to torque shall be neglected and value of Δz shall be taken equal to 1.0 in all cases and only flexural shear stresses in the web shall be considered in the calculation of Δ.

$$\Delta_Z := 1.0$$

Maximum Shear stress in web:

$$Q := (b \cdot t_f) \cdot \left(\frac{h_w}{2} + \frac{t_f}{2}\right) + \left(\frac{h_w}{2} \cdot t_w\right) \cdot \left(\frac{h_w}{4}\right)$$ (Moment of area about N/A)

$$f_{ve} := \frac{V_u \cdot Q}{I_z \cdot t_w}$$ $f_{ve} = 2\ ksi$

Nominal Shear resistance of web: (AASHTO 6.11.8.2)

$k_s := 5.34$ (Plate-buckling coefficient for shear stress)

$\lambda_w = 18.7$ (Slenderness ratio of web)

$$F_{cv} := \begin{cases} 0.58 \cdot F_y & \text{if } \lambda_w \le 1.12 \cdot \sqrt{\dfrac{E \cdot k_s}{F_y}} \\ \dfrac{0.65 \cdot \sqrt{F_y \cdot E \cdot k_s}}{\lambda_w} & \text{also if } 1.12 \cdot \sqrt{\dfrac{E \cdot k_s}{F_y}} < \lambda_w \le 1.40 \cdot \sqrt{\dfrac{E \cdot k_s}{F_y}} \\ \dfrac{0.9 \cdot E \cdot k_s}{\lambda_w^{\,2}} & \text{also if } \lambda_w > 1.40 \cdot \sqrt{\dfrac{E \cdot k_s}{F_y}} \\ \text{"ERROR"} & \text{else} \end{cases}$$

$F_{cv} = 29\ ksi$

$\phi_T := 1.0$ (Resistance factor for torsion, AASHTO 6.5.4.2)

$$\Delta := \begin{cases} \max\left(1 - \left(\dfrac{f_{ve}}{\phi_T \cdot F_{cv}}\right)^2, 0\right) & \text{if } \dfrac{P_u}{P_r} > 0.05 \\ 1.0 & \text{else} \end{cases}$$

(Axial resistance modifier, AASHTO Eq. 6.9.2.2.2-1)

$\Delta = 1$

Combined Axial and Flexure Check (AASHTO 6.9.2.2.1)

The resistance factors for combined axial resistance and flexure resistance (AASHTO 6.5.4.2)

$\phi_{fc} := 1.0$

$\phi_{ac} := 0.7$

$M_{ry} := \phi_{fc} \cdot M_{ny} = 298\ kip \cdot ft$ $M_{rz} := \phi_{fc} \cdot M_{nz} = 448\ kip \cdot ft$

$P_{rc} := \phi_{ac} \cdot P_n = 828.01\ kip$

Check compactness of section (AASHTO A6.2.1 and A6.3.2)

$D_{cp} := \dfrac{h_w}{2} = 6.36\ in$ (Depth of web in compression at the plastic moment)

$M_y := F_y \cdot S_z = 603.1\ kip \cdot ft$ (Yield moment)

$Y' := \dfrac{h_w}{2} = 6.36\ in$ (Depth of plastic neutral axis, Table D6.1.1)

$M_p := F_y \cdot Z_z = 675.3\ kip \cdot ft$ (Plastic Moment)

$a_{wc} := \dfrac{2 \cdot D_c \cdot t_w}{b \cdot t_f} = 1.72$

$$\lambda_{rw} := min\left(\max\left(4.6\cdot\sqrt{\frac{E}{F_y}}, \left(3.1+\frac{5}{a_{wc}}\right)\cdot\sqrt{\frac{E}{F_y}}\right), 5.7\cdot\sqrt{\frac{E}{F_y}}\right) = 137.27$$ (Equation A6.2.1-3)

Limiting Slenderness ratio for compact web:

$$\lambda_{pw_Dcp} := min\left(\left(\frac{\sqrt{\frac{E}{F_y}}}{0.54\cdot\frac{M_p}{R_h\cdot M_y}-0.09}\right), \lambda_{rw}\cdot\frac{D_{cp}}{D_c}\right) = 46.8$$ (Equation A6.2.1-2)

$$Compact_{web} := \left\| \begin{array}{l} \text{if } \frac{2\cdot D_c}{t_w} < \lambda_{pw_Dcp} \\ \quad \text{"Compact Web"} \\ \text{else} \\ \quad \text{"Non Compact Web"} \end{array} \right. = \text{"Compact Web"}$$

$$Compact_{flange} := \left\| \begin{array}{l} \text{if } \lambda_f < 0.38\cdot\sqrt{\frac{E}{F_y}} \\ \quad \text{"Compact Flange"} \\ \text{else} \\ \quad \text{"Non Compact Flange"} \end{array} \right. = \text{"Non Compact Flange"}$$

$$Compact_{Section} := \left\| \begin{array}{l} \text{if } Compact_{web} = \text{"Compact Web"} \wedge Compact_{flange} = \text{"Compact Flange"} \\ \quad \text{"Compact Section"} \\ \text{else} \\ \quad \text{"Non Compact Section"} \end{array} \right. = \text{"Non Compact Section"}$$

Interaction between axial load and bending moment in pile:

$$Ratio_{Interaction} := \left\| \begin{array}{l} \text{if } Compact_{Section} = \text{"Compact Section"} \\ \quad \left\| \begin{array}{l} \text{if } \frac{P_u}{P_r} < 0.2 \\ \quad \left\| \left(\frac{P_u}{2\cdot\Delta\cdot P_r}\right) + \frac{M_{uy}}{\Delta_Z\cdot M_{ry}} + \frac{M_{uz}}{\Delta_Z\cdot M_{rz}} \right. \\ \text{else} \\ \quad \left\| \left(\frac{P_u}{\Delta\cdot P_r}\right) + \frac{8}{9}\cdot\left(\frac{M_{uy}}{\Delta_Z\cdot M_{ry}} + \frac{M_{uz}}{\Delta_Z\cdot M_{rz}}\right) \right. \end{array} \right. \\ \text{else} \\ \quad \left\| \left(\frac{P_u}{\Delta\cdot P_r} + \frac{M_{uy}}{\Delta_Z\cdot M_{ry}} + \frac{M_{uz}}{\Delta_Z\cdot M_{rz}}\right) \right. \end{array} \right. = 0.49$$ (AASHTO Section. 6.9.2.2.1)

$$Check_8 := \begin{cases} \text{if } Ratio_{Interaction} < 1 \\ \quad \text{"Good. The pile is safe in combined axial and flexure effects"} \\ \text{else} \\ \quad \text{"Not Good. The pile is not safe in combined axial and flexure effects"} \end{cases}$$

$Check_8 =$ "Good. The pile is safe in combined axial and flexure effects"

PILE DESIGN CALCULATIONS

FIXED CASE

PINNED CASE

References:

1. AASHTO LRFD Bridge Design Specifications, 19th Edition, 2020
2. NYSDOT LRFD Bridge Design Specifications - 2021
3. NYSDOT Geotechnical Design Manual
4. NYSDOT Bridge Manual - 2021

Pile Design Calculations (Pinned Case)

Color Key

Input | Intermediate results | Recalling previously established value | Final Result

Bridge Geometry and Pile properties

$e_{pile} := 1.5 \cdot ft$ (Edge distance of pile, NYSDOT BM 11.1.4.2)

H Pile Section: ***HP14x117***

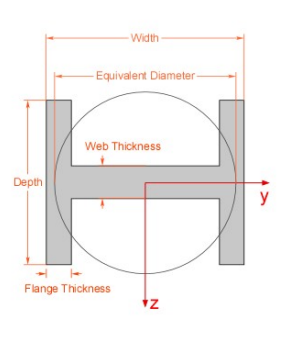

$b_s := 14.9 \cdot in$ (Width)

$d_s := 14.2 \cdot in$ (Depth)

$t_{fs} := 0.805 \cdot in$ (Flange thickness)

$t_{ws} := 0.805 \cdot in$ (Web thickness)

Substract 1/16" all around these dimensions to account for corrosion.

$b'_s := b_s - 2 \cdot \left(\frac{1}{16}\right) \cdot in$ $b'_s = 14.78\ in$

$d'_s := d_s - 2 \cdot \left(\frac{1}{16}\right) \cdot in$ $d'_s = 14.08\ in$

$t'_{fs} := t_{fs} - 2 \cdot \left(\frac{1}{16}\right) \cdot in$ $t'_{fs} = 0.68\ in$

$t'_{ws} := t_{ws} - 2 \cdot \left(\frac{1}{16}\right) \cdot in$ $t'_{ws} = 0.68\ in$

$d_{eq} := d'_s - 2 \cdot \frac{t'_{fs}}{2} = 13.4\ in$ (Equivalent diameter of pile)

$P := 2 \cdot (b'_s + d'_s) = 4.81\ ft$ (Perimeter of pile section)

$A_T := b'_s \cdot d'_s = 207.96\ in^2$ (Tip area of pile section)

$S_y := 4.5\ ft + 0\ in = 4.5\ ft$ (Spacing of Piles in Y direction)

$S_z := 7\ ft + 6\ in = 7.5\ ft$ (Spacing of Piles in Z direction)

$S_{min} := 3 \cdot d_s = 3.55\ ft$ (Minimum Pile Spacing, NYSDOT GDM Sec. 11.9.2.1)

$Check_1 :=$ if $min(S_y, S_z) \geq S_{min}$ "Pile Spacing is OKAY" else "Pile Spacing is NOT OKAY" $=$ "Pile Spacing is OKAY"

$L_{emb} := 76\ ft$ (Pile embedment depth)

$L_{by} := 21.9 \cdot ft$ (Depth to fixity of pile, from GROUP Analysis)

$L_{bz} := 21.8 \cdot ft$ (Depth to fixity of pile, from GROUP Analysis)

$K_e := 0.8$ (Effective length factor, AASHTO Table C4.6.2.5-1, Case b)

$E := 29000 \cdot ksi$ (Modulus of Elasticity)

$F_y := 50 \cdot ksi$ (Yield stress)

$A_{pile} := 2 \cdot t'_{fs} \cdot b'_s + t'_{ws} \cdot (d'_s - 2 \cdot t'_{fs})$ (Cross sectional area of pile) $A_{pile} = 28.74\ in^2$

Pile Applied loads (See Summary of GROUP Results)

$P_u := 239.5 \cdot kip$ (Maximum axial pile load under STR combination)

$V_y := 11.22\ kip$ (Max. factored shear in Pile in Y axis)

$V_z := 4.0\ kip$ (Max. factored shear in Pile in Z axis)

$V_u := \sqrt{V_y^2 + V_z^2} = 11.91\ kip$ (Max. resultant shear in Pile)

$M_{uy} := 74.2\ kip \cdot in$ (Factored applied moment about pile weak axis)

$M_{uz} := 307.11\ kip \cdot in$ (Factored applied moment about pile strong axis)

Geotechnical Design of Pile

$q_u := 15000 \cdot psi$ (Nominal bearing resistance on rock)

Use Hard-Bite Point Model: *HP-77750-B* Pile shoe:

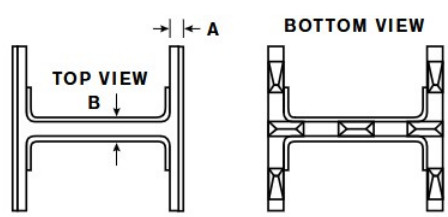

$A' := 1\ in - 2 \cdot \frac{1}{16}\ in = 0.88\ in$ $B' := 1.625\ in - 2 \cdot \frac{1}{16}\ in = 1.5\ in$

$A_{pile_Shoe} := 2 \cdot b'_s \cdot A' + (d'_s - 2 \cdot A') \cdot B' = 44.34\ in^2$ (Bearing area of pile shoe)

Nominal axial capacity of pile:

$P_{ng} := (q_u \cdot A_{pile_Shoe}) = 665\ kip$ $\qquad P_{ng} = 665\ kip$

Limiting geotechnical axial capacity of pile in compression due to drivability concerns (NYSDOT GDM 11.9.2.7.6)

No allowance for corrosion considered in the pile cross sectional area at the time of driving.

$A_{pile_no_corrosion} := 2 \cdot t_{fs} \cdot b_s + t_{ws} \cdot (d_s - 2 \cdot t_{fs}) = 34.12\ in^2$ (Pile area without consideration for corrosion)

$P_{limit_g} := 0.5 \cdot F_y \cdot (A_{pile_no_corrosion}) = 853\ kip$

Controlling nominal Geotech capacity in compression:

$P_{nominal} := min(P_{ng}, P_{limit_g}) = 665\ kip$

$\phi_{a_g} := 0.6$ (Resistance factor based on PDA testing, NYSDOT GDM 11.9.2.7.6)

Factored Geotech capacity in compression:

$P_{rg} := \phi_{a_g} \cdot P_{nominal} = 399\ kip$

Demand Capacity ratio for geotechnical axial capacity of Pile

$DC_{a_g} := \frac{P_u}{P_{rg}} = 0.6$

```
Check3 := | if DC_a_g < 1.0
          |   | "Good. Geotechnical axial capacity of pile meets the demand"
          | else
          |   | "Not Good. Geotechnical axial capacity of pile isn't sufficient"
```

$Check_3 =$ "Good. Geotechnical axial capacity of pile meets the demand"

Structural Design of Pile

Pile Section Properties:

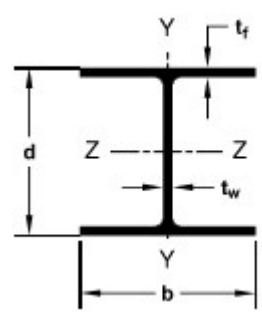

$b := b'_s$ (Width of flange) $\qquad b = 14.78\ in$

$d := d'_s$ (Depth of section) $\qquad d = 14.08\ in$

$t_f := t'_{fs}$ (Thickness of flange) $\qquad t_f = 0.68\ in$

$t_w := t'_{ws}$ (Thickness of web) $\qquad t_w = 0.68\ in$

$h_w := d - 2 \cdot t_f$ (Height of web) $\qquad h_w = 12.72\ in$

$A_s := 2 \cdot t_f \cdot b + t_w \cdot h_w$ (Area of section) $A_s = 28.74\ in^2$

$I_y := \frac{t_f \cdot b^3}{6} + \frac{h_w \cdot t_w^3}{12}$ (Moment of inertia about y axis) $I_y = 365.88\ in^4$

$S_y := \frac{I_y}{\left(\frac{b}{2}\right)}$ (Elastic Section modulus about y axis) $S_y = 49.53\ in^3$

$Z_y := \frac{t_f \cdot b^2}{2} + \frac{h_w \cdot t_w^2}{4}$ (Plastic section modulus about y axis) $Z_y = 75.69\ in^3$

$r_y := \sqrt{\frac{I_y}{A_s}}$ (Radius of gyration about y axis) $r_y = 3.57\ in$

$I_z := \frac{b \cdot d^3}{12} - \frac{(b - t_w) \cdot h_w^3}{12}$ (Moment of inertia about z axis) $I_z = 1018.61\ in^4$

$S_z := \frac{I_z}{\left(\frac{d}{2}\right)}$ (Elastic section modulus about z axis) $S_z = 144.74\ in^3$

$Z_z := \frac{b \cdot d^2}{4} - \frac{(b - t_w) \cdot h_w^2}{4}$ (Plastic section modulus about z axis) $Z_z = 162.06\ in^3$

$r_z := \sqrt{\frac{I_z}{A_s}}$ (Radius of gyration about z axis) $r_z = 5.95\ in$

$\lambda_y := \frac{K_e \cdot L_{by}}{r_y}$ (Slenderness ratio of pile with respect to y axis) $\lambda_y = 59$

$\lambda_z := \frac{K_e \cdot L_{bz}}{r_z}$ (slenderness ratio of pile with respect to z axis) $\lambda_z = 35$

$\lambda_{limit} := 120$ (Limiting slenderness ratio, AASHTO Sec. 6.9.3)

$Check_4 :=$ if $\lambda_z < \lambda_{limit} \wedge \lambda_y < \lambda_{limit}$
"Good. Slenderness ratio within the limit"
else
"Not Good. Slenderness ratio outside the limit"

$Check_4 =$ "Good. Slenderness ratio within the limit"

<u>Axial Capacity of Pile Section</u>

Check slenderness of section in compression (AASHTO Sec. 6.9.4.2.1)

$\lambda_{rf} := 0.56 \cdot \sqrt{\frac{E}{F_y}}$ (Limiting slenderness ratio of flange) $\lambda_{rf} = 13.49$

$\lambda_{rw} := 1.49 \cdot \sqrt{\frac{E}{F_y}}$ (Limiting slenderness ratio of web) $\lambda_{rw} = 35.88$

$\lambda_f := \frac{\left(\frac{b}{2}\right)}{t_f}$ (Slenderness ratio of flange) $\lambda_f = 10.86$

$\lambda_w := \frac{h_w}{t_w}$ (slenderness ratio of web) $\lambda_w = 18.7$

```
Slenderness := | if λf < λrf ∧ λw < λrw
               |   | "Non-slender section. Local buckling effects can be neglected"
               | else
               |   | "Slender section. Local buckling effects needs to be considered"
```

Slenderness = "Non-slender section. Local buckling effects can be neglected"

Elastic critical buckling resistance based on flexural buckling (AASHTO Sec. 6.9.4.1.2)

$P_{ef} := \frac{\pi^2 \cdot E}{(\max(\lambda_z, \lambda_y))^2} \cdot A_s$ $P_{ef} = 2369\ kip$

Elastic critical buckling resistance based on torsional buckling (AASHTO Sec. 6.9.4.1.3)

$J_s := \frac{2 \cdot b \cdot t_f^3 + (d - t_f) \cdot t_w^3}{3}$ (St. Venant Constant) $J_s = 4.5\ in^4$

$C_w := \frac{I_y \cdot d^2}{4}$ (Warping torsional constant, AASHTO C6.9.4.1.3) $C_w = 18121\ in^6$

$KL := K_e \cdot \max(L_{by}, L_{bz})$ (Effective length for torsional buckling) $KL = 17.52\ ft$

$G' := 0.385 \cdot E = 11165\ ksi$ (Shear modulus, AASHTO Sec. 6.9.4.1.3)

$P_{eft} := \left(\frac{\pi^2 \cdot E \cdot C_w}{(KL)^2} + G' \cdot J_s\right) \cdot \frac{A_s}{I_y + I_z}$ $P_{eft} = 3479\ kip$

$P_e := min(P_{ef}, P_{eft})$ (Controlling Pe) $P_e = 2369\ kip$

Nominal Yield resistance (AASHTO Sec 6.9.4.1.1)

$P_o := F_y \cdot A_s$ $\qquad P_o = 1437\ kip$

Nominal Compressive resistance (AASHTO Sec. 6.9.4.1.1)

$$P_n := \begin{cases} \left(0.658^{\left(\frac{P_o}{P_e}\right)}\right) \cdot P_o & \text{if } \frac{P_o}{P_e} \le 2.25 \\ 0.877 \cdot P_e & \text{else} \end{cases}$$

$P_n = 1115\ kip$

$\phi_c := 0.6$ (Resistance factor for pile in compression, AASHTO 6.5.4.2)

$P_r := \phi_c \cdot P_n$ (Factored axial capacity of pile in compression) $\qquad P_r = 669\ kip$

Demand Capacity ratio for axial structural strength of Pile:

$DC_a := \frac{P_u}{P_r}$ $\qquad DC_a = 0.36$

$$Check_5 := \begin{cases} \text{"Good. Axial structural capacity of pile exceeds the demand"} & \text{if } DC_a < 1 \\ \text{"Not Good. Axial structural capacity is less than the demand"} & \text{else} \end{cases}$$

$Check_5 =$ "Good. Axial structural capacity of pile exceeds the demand"

Flexural Capacity of Pile about strong axis (AASHTO 6.10.8)

The flexural capacity of the pile about the strong axis is the minimum of capacities obtained by the following three criteria

1. Compression flange local buckling
2. Compression flange lateral torsional buckling
3. Tension flange Yielding

1. Compression flange local buckling (AASHTO 6.10.8.2.2)

$\lambda_f = 10.86$

$F_{yr} := 0.7 \cdot F_y = 35\ ksi$

$\lambda_{pf} := 0.38 \cdot \sqrt{\frac{E}{F_y}}$ $\qquad \lambda_{pf} = 9.15$

$\lambda_{rf} := 0.56 \cdot \sqrt{\frac{E}{F_{yr}}}$

$R_b := 1$ (Web load shedding factor, taken as 1.0)

$R_h := 1$ (Hybrid factor, taken as 1.0)

$$F_{nc_1} := \begin{cases} R_b \cdot R_h \cdot F_y & \text{if } \lambda_f \le \lambda_{pf} \\ \left(1 - \left(1 - \frac{F_{yr}}{R_h \cdot F_y}\right) \cdot \left(\frac{\lambda_f - \lambda_{pf}}{\lambda_{rf} - \lambda_{pf}}\right)\right) \cdot R_b \cdot R_h \cdot F_y & \text{else} \end{cases}$$

$F_{nc_1} = 46\ ksi$

2. Compression flange lateral-torsional buckling (AASHTO 6.10.8.2.3)

$L_b := L_{bz}$ $L_b = 261.6\ in$

To find the depth of web in compression Dc, calculate the total compressive and tensile stresses due to axial load and bending.

$f_c := \frac{P_u}{A_s} + \frac{M_{uz}}{S_z}$ $f_c = 10.46\ ksi$

$f_t := -\left(\frac{P_u}{A_s}\right) + \frac{M_{uz}}{S_z}$ $f_t = -6.21\ ksi$

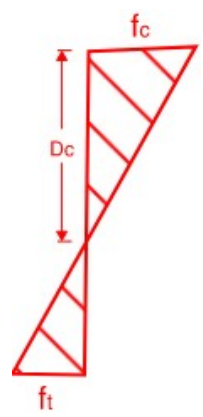

$$D_c := \begin{cases} h_w & \text{if } f_t < 0 \\ \frac{f_c}{f_c + f_t} \cdot d - t_f & \text{else} \end{cases}$$

$D_c = 12.72\ in$

$$r_t := \frac{b}{\sqrt{12 \cdot \left(1 + \frac{1}{3} \cdot \frac{D_c \cdot t_w}{b \cdot t_f}\right)}}$$

(Effective radius of gyration for lateral-torsional buckling) $r_t = 3.76\ in$

$C_b := 1.0$ (Moment gradient modifier, taken as 1.0 for simplicity)

$$F_{cr} := \frac{C_b \cdot R_b \cdot \pi^2 \cdot E}{\left(\frac{L_b}{r_t}\right)^2}$$

(Elastic lateral-torsional buckling stress) $F_{cr} = 59\ ksi$

$L_p := r_t \cdot \sqrt{\frac{E}{F_y}}$ $L_p = 91\ in$

$L_r := \pi \cdot r_t \cdot \sqrt{\frac{E}{F_{yr}}}$ $L_r = 340\ in$

$$F_{nc_2} := \begin{cases} R_b \cdot R_h \cdot F_y & \text{if } L_b \le L_p \\ \min\left(C_b \cdot \left(1 - \left(1 - \frac{F_{yr}}{R_h \cdot F_y}\right) \cdot \left(\frac{L_b - L_p}{L_r - L_p}\right)\right) \cdot R_b \cdot R_h \cdot F_y, R_b \cdot R_h \cdot F_y\right) & \text{also if } L_p < L_b \le L_r \\ \min\left(F_{cr}, R_b \cdot R_h \cdot F_y\right) & \text{else} \end{cases}$$

$F_{nc_2} = 40\ ksi$

3. Tension flange Yielding (AASHTO 6.10.8.3)

$F_{nt} := R_h \cdot F_y$ $\qquad F_{nt} = 50\ ksi$

Nominal moment capacity of the pile section about strong axis:

$M_{nz} := S_z \cdot \min\left(F_{nc_1}, F_{nc_2}, F_{nt}\right)$ $\qquad M_{nz} = 479\ kip \cdot ft$

$\phi_f := 1$ (Resistance factor for bending, AASHTO 6.5.4.2)

$M_{rz} := \phi_f \cdot M_{nz}$ $\qquad M_{rz} = 479\ kip \cdot ft$

Demand Capacity ratio for flexural strength of Pile:

$DC_f := \frac{M_{uz}}{M_{rz}}$ $\qquad DC_f = 0.05$

$$Check_{6a} := \begin{cases} \text{"Good. Moment capacity of the section is sufficient"} & \text{if } DC_f < 1 \\ \text{"Not Good. Moment capacity of the section is not sufficient"} & \text{else} \end{cases}$$

$Check_{6a} =$ "Good. Moment capacity of the section is sufficient"

Flexural Capacity of Pile about weak axis (AASHTO 6.12.2.2-1)

$\lambda_{rf} := 0.83 \cdot \sqrt{\frac{E}{F_y}} = 19.99$ $\qquad \lambda_{pf} = 9.15$

$$M_{ny} := \begin{cases} F_y \cdot Z_y & \text{if } \lambda_f \le \lambda_{pf} \\ \left(1 - \left(1 - \frac{S_y}{Z_y}\right) \cdot \left(\frac{\lambda_f - \lambda_{pf}}{0.45 \cdot \sqrt{\frac{E}{F_y}}}\right)\right) \cdot F_y \cdot Z_y & \text{else if } \lambda_{pf} < \lambda_f \le \lambda_{rf} \end{cases} = 298.16\ kip \cdot ft$$

$M_{ry} := \phi_f \cdot M_{ny} = 298.16\ kip \cdot ft$

Demand Capacity ratio for flexural strength of Pile:

$DC_{f_w} := \frac{M_{uy}}{M_{ry}} = 0.02$ $\qquad DC_{f_w} = 0.02$

$Check_{6b} :=$ if $DC_f < 1$ "Good. Moment capacity of the section is sufficient" else "Not Good. Moment capacity of the section is not sufficient"

$Check_{6b} =$ "Good. Moment capacity of the section is sufficient"

Shear Capacity of Pile (AASHTO 6.10.9.2)

$V_p := 0.58 \cdot F_y \cdot h_w \cdot t_w$ $\qquad V_p = 251\ kip$

$K' := 5$

$C' :=$ if $\frac{h_w}{t_w} \le 1.12 \cdot \sqrt{\frac{E \cdot K'}{F_y}}$ $\quad 1.0$

also if $1.12 \cdot \sqrt{\frac{E \cdot K'}{F_y}} < \frac{h_w}{t_w} \le 1.40 \cdot \sqrt{\frac{E \cdot K'}{F_y}}$ $\quad \frac{1.12}{\left(\frac{h_w}{t_w}\right)} \cdot \sqrt{\frac{E \cdot K'}{F_y}}$

else $\quad \frac{1.57}{\left(\frac{h_w}{t_w}\right)^2} \cdot \left(\frac{E \cdot K'}{F_y}\right)$ $\qquad C' = 1$

Nominal shear capacity:

$V_n := C' \cdot V_p$ $\qquad V_n = 251\ kip$

$\phi_v := 1.0$ $\qquad$ (Resistance factor for shear, AASHTO Sec. 6.5.4.2)

$V_r := \phi_v \cdot V_n$ $\qquad V_r = 251\ kip$

Demand Capacity ratio for Shear Strength of Pile:

$DC_v := \frac{V_u}{V_r}$ $\qquad DC_v = 0.05$

$$Check_7 := \left\| \begin{array}{l} \text{if } DC_v < 1 \\ \quad \text{"Good. Shear capacity of the section is sufficient"} \\ \text{else} \\ \quad \text{"Not Good. Shear capacity of the section isn't sufficient"} \end{array} \right. = \text{"Good. Shear capacity of the section is sufficient"}$$

Interaction with flexural Shear: (AASHTO 6.9.2.2)

$$\frac{P_u}{P_r} = 0.36$$

$$Shear_{Interaction} := \left\| \begin{array}{l} \text{if } \frac{P_u}{P_r} > 0.05 \\ \quad \text{"Interaction with flexural shear needs to be considered"} \\ \text{else} \\ \quad \text{"Interaction with flexural shear does not need to be considered"} \end{array} \right.$$

$Shear_{Interaction} =$ "Interaction with flexural shear needs to be considered"

Per AASHTO 6.9.2.2.2, for I-Section members, the cross section shear stresses due to torque shall be neglected and value of Δz shall be taken equal to 1.0 in all cases and only flexural shear stresses in the web shall be considered in the calculation of Δ.

$$\Delta_Z := 1.0$$

Maximum Shear stress in web:

$$Q := (b \cdot t_f) \cdot \left(\frac{h_w}{2} + \frac{t_f}{2}\right) + \left(\frac{h_w}{2} \cdot t_w\right) \cdot \left(\frac{h_w}{4}\right)$$ (Moment of area about N/A)

$$f_{ve} := \frac{V_u \cdot Q}{I_z \cdot t_w}$$ $f_{ve} = 1.39$ ***ksi***

Nominal Shear resistance of web: (AASHTO 6.11.8.2)

$k_s := 5.34$ (Plate-buckling coefficient for shear stress)

$\lambda_w = 18.7$ (Slenderness ratio of web)

$$F_{cv} := \begin{cases} 0.58 \cdot F_y & \text{if } \lambda_w \le 1.12 \cdot \sqrt{\dfrac{E \cdot k_s}{F_y}} \\ \dfrac{0.65 \cdot \sqrt{F_y \cdot E \cdot k_s}}{\lambda_w} & \text{also if } 1.12 \cdot \sqrt{\dfrac{E \cdot k_s}{F_y}} < \lambda_w \le 1.40 \cdot \sqrt{\dfrac{E \cdot k_s}{F_y}} \\ \dfrac{0.9 \cdot E \cdot k_s}{\lambda_w^{\,2}} & \text{also if } \lambda_w > 1.40 \cdot \sqrt{\dfrac{E \cdot k_s}{F_y}} \\ \text{"ERROR"} & \text{else} \end{cases}$$

$F_{cv} = 29\ ksi$

$\phi_T := 1.0$ (Resistance factor for torsion, AASHTO 6.5.4.2)

$$\Delta := \begin{cases} \max\left(1 - \left(\dfrac{f_{ve}}{\phi_T \cdot F_{cv}}\right)^2, 0\right) & \text{if } \dfrac{P_u}{P_r} > 0.05 \\ 1.0 & \text{else} \end{cases}$$

(Axial resistance modifier, AASHTO Eq. 6.9.2.2.2-1)

$\Delta = 1$

Combined Axial and Flexure Check (AASHTO 6.9.2.2.1)

The resistance factors for combined axial resistance and flexure resistance (AASHTO 6.5.4.2)

$\phi_{fc} := 1.0$

$\phi_{ac} := 0.7$

$M_{ry} := \phi_{fc} \cdot M_{ny} = 298\ kip \cdot ft$ $M_{rz} := \phi_{fc} \cdot M_{nz} = 479\ kip \cdot ft$

$P_{rc} := \phi_{ac} \cdot P_n = 780.38\ kip$

Check compactness of section (AASHTO A6.2.1 and A6.3.2)

$D_{cp} := \dfrac{h_w}{2} = 6.36\ in$ (Depth of web in compression at the plastic moment)

$M_y := F_y \cdot S_z = 603.1\ kip \cdot ft$ (Yield moment)

$Y' := \dfrac{h_w}{2} = 6.36\ in$ (Depth of plastic neutral axis, Table D6.1.1)

$M_p := F_y \cdot Z_z = 675.3\ kip \cdot ft$ (Plastic Moment)

$$a_{wc} := \frac{2 \cdot D_c \cdot t_w}{b \cdot t_f} = 1.72$$

$$\lambda_{rw} := min\left(\max\left(4.6 \cdot \sqrt{\frac{E}{F_y}}, \left(3.1 + \frac{5}{a_{wc}}\right) \cdot \sqrt{\frac{E}{F_y}}\right), 5.7 \cdot \sqrt{\frac{E}{F_y}}\right) = 137.27$$ (Equation A6.2.1-3)

Limiting Slenderness ratio for compact web:

$$\lambda_{pw_Dcp} := min\left(\left(\frac{\sqrt{\frac{E}{F_y}}}{0.54 \cdot \frac{M_p}{R_h \cdot M_y} - 0.09}\right), \lambda_{rw} \cdot \frac{D_{cp}}{D_c}\right) = 46.8$$ (Equation A6.2.1-2)

$$Compact_{web} := \left\| \begin{array}{l} \text{if } \frac{2 \cdot D_c}{t_w} < \lambda_{pw_Dcp} \\ \quad \| \text{"Compact Web"} \\ \text{else} \\ \quad \| \text{"Non Compact Web"} \end{array} \right. = \text{"Compact Web"}$$

$$Compact_{flange} := \left\| \begin{array}{l} \text{if } \lambda_f < 0.38 \cdot \sqrt{\frac{E}{F_y}} \\ \quad \| \text{"Compact Flange"} \\ \text{else} \\ \quad \| \text{"Non Compact Flange"} \end{array} \right. = \text{"Non Compact Flange"}$$

$$Compact_{Section} := \left\| \begin{array}{l} \text{if } Compact_{web} = \text{"Compact Web"} \wedge Compact_{flange} = \text{"Compact Flange"} \\ \quad \| \text{"Compact Section"} \\ \text{else} \\ \quad \| \text{"Non Compact Section"} \end{array} \right. = \text{"Non Compact Section"}$$

Interaction between axial load and bending moment in pile:

$$Ratio_{Interaction} := \left\| \begin{array}{l} \text{if } Compact_{Section} = \text{"Compact Section"} \\ \quad \left\| \begin{array}{l} \text{if } \frac{P_u}{P_r} < 0.2 \\ \quad \left\| \left(\frac{P_u}{2 \cdot \Delta \cdot P_r}\right) + \frac{M_{uy}}{\Delta_Z \cdot M_{ry}} + \frac{M_{uz}}{\Delta_Z \cdot M_{rz}} \right. \\ \text{else} \\ \quad \left\| \left(\frac{P_u}{\Delta \cdot P_r}\right) + \frac{8}{9} \cdot \left(\frac{M_{uy}}{\Delta_Z \cdot M_{ry}} + \frac{M_{uz}}{\Delta_Z \cdot M_{rz}}\right) \right. \end{array} \right. \\ \text{else} \\ \quad \left\| \left(\frac{P_u}{\Delta \cdot P_r} + \frac{M_{uy}}{\Delta_Z \cdot M_{ry}} + \frac{M_{uz}}{\Delta_Z \cdot M_{rz}}\right) \right. \end{array} \right. = 0.43$$ (AASHTO Section. 6.9.2.2.1)

$$Check_8 := \left\| \begin{array}{l} \text{if } Ratio_{Interaction} < 1 \\ \quad \text{"Good. The pile is safe in combined axial and flexure effects"} \\ \text{else} \\ \quad \text{"Not Good. The pile is not safe in combined axial and flexure effects"} \end{array} \right.$$

$Check_8 =$ "Good. The pile is safe in combined axial and flexure effects"

PILE FOUNDATION ANALYSIS

SUMMARY OF GROUP RESULTS

P-MULTIPLIERS

GROUP ANALYSIS

DEPTH TO FIXITY

PILE FOUNDATION ANALYSIS

SUMMARY OF GROUP RESULTS

P-MULTIPLIERS

GROUP ANALYSIS

DEPTH TO FIXITY

Summary of GROUP Results

Fixed Case						
No	Load Comb.	Maximum Axial Load (kip)	Lateral Load V_y (kips)	Lateral Load V_z (kips)	Moment M_y (kips*in)	Moment M_z (kips*in)
1	Service I-L1	176.2	13.6	4.1	116.8	537.1
2	Service I-L2	181.1	15.0	5.1	133.7	574.0
3	Strength I-Max-L1	226.1	16.1	4.5	113.2	603.9
4	Strength I-Max-L2	234.4	16.3	4.5	112.3	615.2
5	Strength I-Min-L1	179.8	14.6	4.5	113.3	536.6
6	Strength I-Min-L2	188.1	14.9	4.4	110.6	548.7
7	Strength III-L1	166.7	13.4	2.9	70.1	460.1
8	Strength III-L2	166.7	13.4	2.9	70.1	460.1
9	Strength IV-L1	192.1	13.2	1.8	66.5	501.8
10	Strength IV-L2	192.1	13.2	1.8	66.5	501.8
11	Strength V-L1	222.0	16.2	5.3	136.0	629.3
12	Strength V-L2	228.6	15.9	4.8	128.9	627.2
Design Envelope		234.4	16.3	5.3	136.0	629.3

(Taking maximum of all responses)

Pinned Case						
No	Load Comb.	Maximum Axial Load (kip)	Lateral Load V_y (kips)	Lateral Load V_z (kips)	Moment M_y (kips*in)	Moment M_z (kips*in)
1	Service I-L1	182.0	10.1	3.8	70.0	267.3
2	Service I-L2	186.7	10.2	3.9	70.9	271.6
3	Strength I-Max-L1	231.3	10.2	3.1	55.0	273.7
4	Strength I-Max-L2	239.5	10.3	3.1	54.4	278.1
5	Strength I-Min-L1	184.8	9.4	3.2	55.1	243.9
6	Strength I-Min-L2	193.0	9.5	3.1	54.7	248.9
7	Strength III-L1	170.4	8.9	2.4	41.2	225.0
8	Strength III-L2	170.4	8.9	2.4	41.2	225.0
9	Strength IV-L1	195.7	9.5	3.0	53.6	249.2
10	Strength IV-L2	195.7	9.5	3.1	53.6	249.2
11	Strength V-L1	228.1	11.1	4.0	73.7	302.3
12	Strength V-L2	234.5	11.2	4.0	74.2	307.1
Design Envelope		239.5	11.2	4.0	74.2	307.1

(Taking maximum of all responses)

Pile Deflection							
No	Load Comb.	Fixed Case			Pinned Case		
		Δ_x (in)	Δ_y (in)	Δ_z (in)	Δ_x (in)	Δ_y (in)	Δ_z (in)
1	Service I-L1	0.145	0.026	0.002	0.150	0.042	0.017
2	Service I-L2	0.149	0.027	0.002	0.154	0.043	0.017

Δ_x	Pile displacement in x-Axis (Settlement)
Δ_y	Pile displacement in y-Axis (Lateral deflection)
Δ_z	Pile displacement in z-Axis (Lateral deflection)

PILE FOUNDATION ANALYSIS

SUMMARY OF GROUP RESULTS

P-MULTIPLIERS

GROUP ANALYSIS

DEPTH TO FIXITY

P-Multipliers

P-Multipliers from NYSDOT LRFD Blue Pages, 2021

10.7.2.4 Horizontal Pile Foundation Movement

Replace Table 10.7.2.4-1 with the following:

Table 10.7.2.4-1, Pile P-Multipliers, Pm, for Multiple Row Shading (Rollins et al., 2006)[1].

Pile CTC spacing (in the direction of loading)	P-Multipliers, P_m		
	Row 1	Row 2	Row 3 and higher
2.5 B	0.738	0.476	0.300
3.0 B	0.786	0.571	0.409
3.5 B	0.826	0.651	0.502
4.0 B	0.860	0.721	0.582
4.5 B	0.891	0.782	0.652
5.0 B	0.918	0.837	0.716
5.5 B	0.943	0.886	0.773
6.0 B	0.966	0.932	0.825
6.5 B	0.987	0.973	0.873
7.0 B	1.000	1.000	0.918
7.5 B	1.000	1.000	0.959
8.0 B	1.000	1.000	0.998
8.5 B	1.000	1.000	1.000

P-Multiplier in Z direction

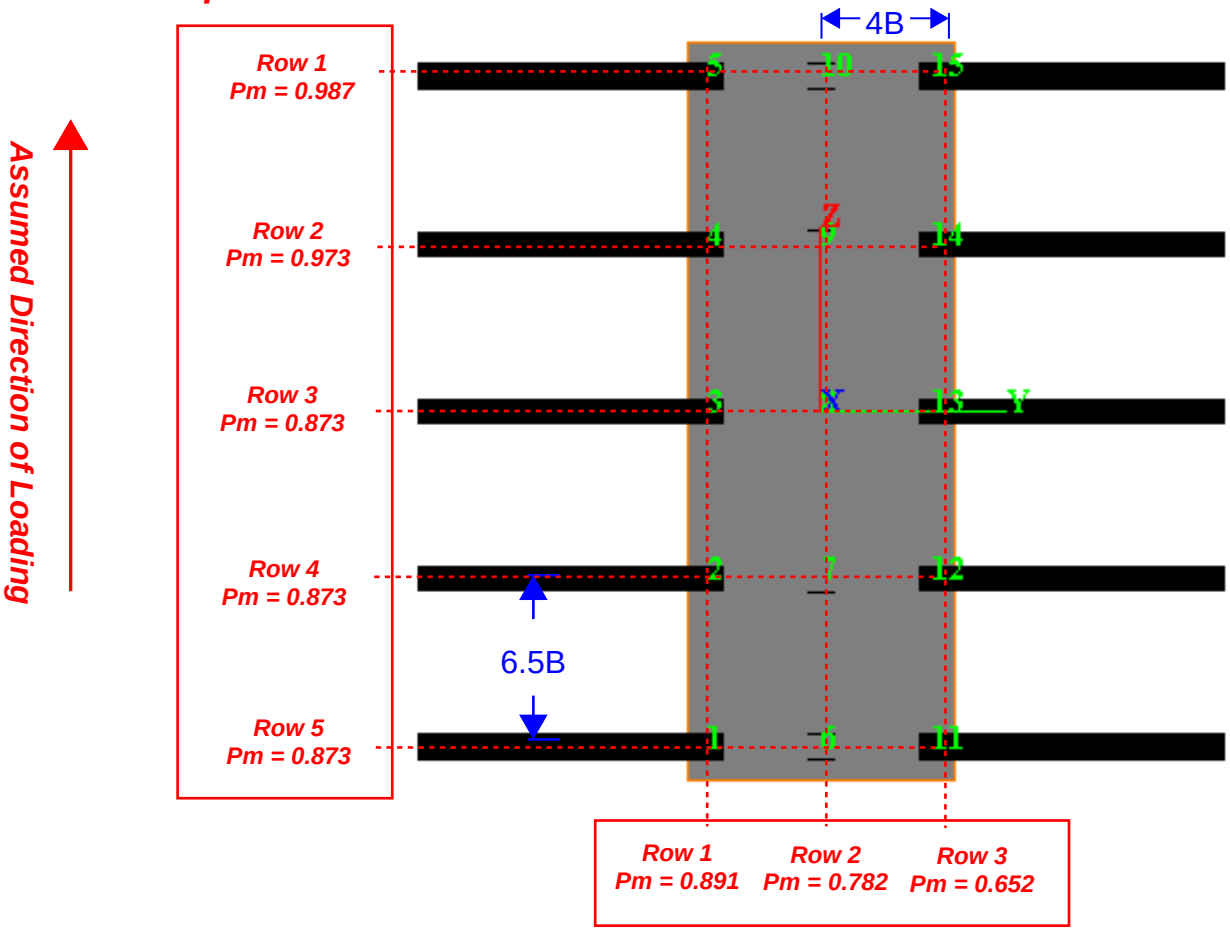

P-Multiplier in Y direction

Assumed Direction of Loading

PILE FOUNDATION ANALYSIS

SUMMARY OF GROUP RESULTS

P-MULTIPLIERS

GROUP ANALYSIS

DEPTH TO FIXITY

PILE FOUNDATION ANALYSIS

SUMMARY OF GROUP RESULTS

P-MULTIPLIERS

GROUP ANALYSIS

DEPTH TO FIXITY

PILE HEAD FIXED CASE – INPUT

PILE HEAD FIXED CASE – OUTPUT

PILE HEAD PINNED CASE – INPUT

PILE HEAD PINNED CASE - OUTPUT

```
==========================================================================

                 GROUP for Windows, Version 2019.11.10

                  Serial Number : 235486675

                  Analysis of A Group of Piles
               Subjected to Axial and Lateral Loading

                (c) Copyright ENSOFT, Inc., 1987-2018
                      All Rights Reserved

==========================================================================


This program is licensed to :

KC Engineering & Land Surveying
New York, NY, USA

Path to file locations      : P:\120179-NYSTA_D214866_TermBridge\Task_2\50
Design Documents\Geotech\Pier_Foundation_Design\GROUP_Model\Updated Uniform 3x5\
Name of input data file     : Pier_updateduniform3x5_Fixed.gp11r
Name of output echo file    : Pier_updateduniform3x5_Fixed.gp11e
Name of output results file : Pier_updateduniform3x5_Fixed.gp11o
Name of output summary file : Pier_updateduniform3x5_Fixed.gp11t
Name of plot output file    : Pier_updateduniform3x5_Fixed.gp11p
Name of runtime file        : Pier_updateduniform3x5_Fixed.gp11r


--------------------------------------------------------------------------
                      Time and Date of Analysis
--------------------------------------------------------------------------

          Date:  August 29, 2025     Time:  12:43:31





           *****     INPUT INFORMATION     *****


New Group


ANALYSIS TYPE = 3D ANALYSIS

ADJUST DEPTH FOR BATTER PILES
```

```
GENERATE LOAD-DISP (AND T-R) CURVES BASED ON SOIL PROFILE

EXTEND INTERPOLATION FOR L-DP (AND T-R) CURVES

UNITS SYSTEM  = ENGL



* TABLE B *  PILE CAP OPTIONS

LENGTH,YY    ( FT ) =    12.00
WIDTH, ZZ    ( FT ) =    33.00
THICKNESS,XX ( FT ) =    4.000

* PILE CAP IS EMBEDDED AND PASSIVE EARTH
  RESISTANCE IN FRONT OF PILE CAP WILL BE CONSIDERED




* TABLE C *  LOAD AND CONTROL PARAMETERS


** LOAD CASES **


NUMBER OF LOAD CASES :   12


LOAD CASE    :     1
CASE NAME    : SER-L1

LOAD TYPE    : Dead, DL
SCALE FACTOR :       1.0000

* CONCENTRATED LOADS *

    NL  VERT.LOAD HR.LOAD Y HR.LOAD Z  MOMENT X  MOMENT Y  MOMENT Z   COORD X
COORD Y   COORD Z
           KIP       KIP       KIP      KIP-IN    KIP-IN    KIP-IN      FT        FT
       FT
     1   2.02E+03      44.8     -27.9      0.00  3.84E+04  1.07E+04      0.00
0.00      0.00


* EQUIVALENT CONCENTRATED LOAD AT ORIGIN *

       VER.LOAD X,KIP     HOR.LOAD Y,KIP     HOR.LOAD Z,KIP
              2023.07           44.8400          -27.9100
```

```
        MOMENT X,KIP-IN    MOMENT Y,KIP-IN    MOMENT Z,KIP-IN
               0.00000           38374.6           10703.2


     * THE LOADING IS STATIC *


     * CONTROL PARAMETERS *
         TOLERANCE ON CONVERGENCE OF PILE CAP MOVEMENT        =  0.10000
         TOLERANCE ON DETERMINATION OF PILE DEFLECTIONS       =  0.10000     IN
         MAX NO OF ITERATIONS ALLOWED FOR FOUNDATION ANALYSIS =      100
         MAXIMUM NO OF ITERATIONS ALLOWED FOR PILE ANALYSIS   =      100
         FACTOR TO APPLY THE LOAD IN INCREMENTS               =   1.0000
         MINIMUM FACTOR FOR LOAD INCREMENTS                   =   1.0000
         PRINT RESULTS ONLY AT PILE CAP


     LOAD CASE    :     2
     CASE NAME    : SER-L2

     LOAD TYPE    : Dead, DL
     SCALE FACTOR :       1.0000

     * CONCENTRATED LOADS *

    NL  VERT.LOAD HR.LOAD Y HR.LOAD Z  MOMENT X  MOMENT Y  MOMENT Z   COORD X
COORD Y   COORD Z
           KIP       KIP       KIP      KIP-IN    KIP-IN    KIP-IN      FT        FT
       FT
     1   2.17E+03      44.8     -27.9      0.00  3.14E+04  1.07E+04      0.00
0.00      0.00


     * EQUIVALENT CONCENTRATED LOAD AT ORIGIN *

        VER.LOAD X,KIP     HOR.LOAD Y,KIP     HOR.LOAD Z,KIP
               2168.48           44.8400          -27.9100

        MOMENT X,KIP-IN    MOMENT Y,KIP-IN    MOMENT Z,KIP-IN
               0.00000           31394.6           10703.2


     * THE LOADING IS STATIC *


     * CONTROL PARAMETERS *
         TOLERANCE ON CONVERGENCE OF PILE CAP MOVEMENT        =  0.10000
         TOLERANCE ON DETERMINATION OF PILE DEFLECTIONS       =  0.10000     IN
         MAX NO OF ITERATIONS ALLOWED FOR FOUNDATION ANALYSIS =      100
```

```
        MAXIMUM NO OF ITERATIONS ALLOWED FOR PILE ANALYSIS   =      100
        FACTOR TO APPLY THE LOAD IN INCREMENTS               =   1.0000
        MINIMUM FACTOR FOR LOAD INCREMENTS                   =   1.0000
        PRINT RESULTS ONLY AT PILE CAP


    LOAD CASE    :     3
    CASE NAME    : STR I Max-L1

    LOAD TYPE    : Dead, DL
    SCALE FACTOR :       1.0000

    * CONCENTRATED LOADS *

   NL  VERT.LOAD HR.LOAD Y HR.LOAD Z  MOMENT X  MOMENT Y  MOMENT Z   COORD X
COORD Y   COORD Z
          KIP       KIP       KIP      KIP-IN    KIP-IN    KIP-IN      FT        FT
      FT
    1   2.67E+03      30.9      0.00      0.00  5.04E+04  8.26E+03      0.00
0.00      0.00


    * EQUIVALENT CONCENTRATED LOAD AT ORIGIN *

          VER.LOAD X,KIP     HOR.LOAD Y,KIP     HOR.LOAD Z,KIP
                 2665.02           30.9100           0.00000

          MOMENT X,KIP-IN    MOMENT Y,KIP-IN    MOMENT Z,KIP-IN
                 0.00000           50386.2           8261.37


    * THE LOADING IS STATIC *


    * CONTROL PARAMETERS *
        TOLERANCE ON CONVERGENCE OF PILE CAP MOVEMENT        =  0.10000
        TOLERANCE ON DETERMINATION OF PILE DEFLECTIONS       =  0.10000     IN
        MAX NO OF ITERATIONS ALLOWED FOR FOUNDATION ANALYSIS =      100
        MAXIMUM NO OF ITERATIONS ALLOWED FOR PILE ANALYSIS   =      100
        FACTOR TO APPLY THE LOAD IN INCREMENTS               =   1.0000
        MINIMUM FACTOR FOR LOAD INCREMENTS                   =   1.0000
        PRINT RESULTS ONLY AT PILE CAP


    LOAD CASE    :     4
    CASE NAME    : STR I Max-L2

    LOAD TYPE    : Dead, DL
    SCALE FACTOR :       1.0000
```

```
     * CONCENTRATED LOADS *

    NL  VERT.LOAD HR.LOAD Y HR.LOAD Z  MOMENT X  MOMENT Y  MOMENT Z   COORD X
COORD Y   COORD Z
           KIP       KIP       KIP      KIP-IN    KIP-IN    KIP-IN      FT        FT
       FT
     1   2.92E+03      30.9      0.00      0.00  3.82E+04  8.26E+03      0.00
0.00      0.00


     * EQUIVALENT CONCENTRATED LOAD AT ORIGIN *

           VER.LOAD X,KIP     HOR.LOAD Y,KIP     HOR.LOAD Z,KIP
                  2919.49           30.9100           0.00000

           MOMENT X,KIP-IN    MOMENT Y,KIP-IN    MOMENT Z,KIP-IN
                  0.00000           38171.4           8261.37


     * THE LOADING IS STATIC *


     * CONTROL PARAMETERS *
         TOLERANCE ON CONVERGENCE OF PILE CAP MOVEMENT        =  0.10000
         TOLERANCE ON DETERMINATION OF PILE DEFLECTIONS       =  0.10000     IN
         MAX NO OF ITERATIONS ALLOWED FOR FOUNDATION ANALYSIS =      100
         MAXIMUM NO OF ITERATIONS ALLOWED FOR PILE ANALYSIS   =      100
         FACTOR TO APPLY THE LOAD IN INCREMENTS               =   1.0000
         MINIMUM FACTOR FOR LOAD INCREMENTS                   =   1.0000
         PRINT RESULTS ONLY AT PILE CAP


     LOAD CASE    :     5
     CASE NAME    : STR I Min-L1

     LOAD TYPE    : Dead, DL
     SCALE FACTOR :       1.0000

     * CONCENTRATED LOADS *

    NL  VERT.LOAD HR.LOAD Y HR.LOAD Z  MOMENT X  MOMENT Y  MOMENT Z   COORD X
COORD Y   COORD Z
           KIP       KIP       KIP      KIP-IN    KIP-IN    KIP-IN      FT        FT
       FT
     1   1.99E+03      30.9      0.00      0.00  5.04E+04  8.26E+03      0.00
0.00      0.00


     * EQUIVALENT CONCENTRATED LOAD AT ORIGIN *
```

```
        VER.LOAD X,KIP     HOR.LOAD Y,KIP     HOR.LOAD Z,KIP
               1986.29           30.9100           0.00000

        MOMENT X,KIP-IN    MOMENT Y,KIP-IN    MOMENT Z,KIP-IN
               0.00000           50386.2           8261.37


     * THE LOADING IS STATIC *


     * CONTROL PARAMETERS *
         TOLERANCE ON CONVERGENCE OF PILE CAP MOVEMENT        =  0.10000
         TOLERANCE ON DETERMINATION OF PILE DEFLECTIONS       =  0.10000     IN
         MAX NO OF ITERATIONS ALLOWED FOR FOUNDATION ANALYSIS =      100
         MAXIMUM NO OF ITERATIONS ALLOWED FOR PILE ANALYSIS   =      100
         FACTOR TO APPLY THE LOAD IN INCREMENTS               =   1.0000
         MINIMUM FACTOR FOR LOAD INCREMENTS                   =   1.0000
         PRINT RESULTS ONLY AT PILE CAP


     LOAD CASE    :     6
     CASE NAME    : STR I Min-L2

     LOAD TYPE    : Dead, DL
     SCALE FACTOR :       1.0000

     * CONCENTRATED LOADS *

    NL  VERT.LOAD HR.LOAD Y HR.LOAD Z  MOMENT X  MOMENT Y  MOMENT Z   COORD X
COORD Y   COORD Z
           KIP       KIP       KIP      KIP-IN    KIP-IN    KIP-IN      FT        FT
       FT
     1   2.24E+03      30.9      0.00      0.00  3.82E+04  8.26E+03      0.00
0.00      0.00


     * EQUIVALENT CONCENTRATED LOAD AT ORIGIN *

        VER.LOAD X,KIP     HOR.LOAD Y,KIP     HOR.LOAD Z,KIP
               2240.76           30.9100           0.00000

        MOMENT X,KIP-IN    MOMENT Y,KIP-IN    MOMENT Z,KIP-IN
               0.00000           38171.4           8261.37


     * THE LOADING IS STATIC *


     * CONTROL PARAMETERS *
         TOLERANCE ON CONVERGENCE OF PILE CAP MOVEMENT        =  0.10000
```

```
        TOLERANCE ON DETERMINATION OF PILE DEFLECTIONS       =  0.10000     IN
        MAX NO OF ITERATIONS ALLOWED FOR FOUNDATION ANALYSIS =      100
        MAXIMUM NO OF ITERATIONS ALLOWED FOR PILE ANALYSIS   =      100
        FACTOR TO APPLY THE LOAD IN INCREMENTS               =   1.0000
        MINIMUM FACTOR FOR LOAD INCREMENTS                   =   1.0000
        PRINT RESULTS ONLY AT PILE CAP


    LOAD CASE    :     7
    CASE NAME    : STR III-L1

    LOAD TYPE    : Dead, DL
    SCALE FACTOR :       1.0000

    * CONCENTRATED LOADS *

   NL  VERT.LOAD HR.LOAD Y HR.LOAD Z  MOMENT X  MOMENT Y  MOMENT Z   COORD X
COORD Y   COORD Z
           KIP       KIP       KIP      KIP-IN    KIP-IN    KIP-IN      FT        FT
      FT
    1   2.18E+03      29.2     -44.6      0.00  2.20E+04  4.35E+03      0.00
0.00      0.00


    * EQUIVALENT CONCENTRATED LOAD AT ORIGIN *

          VER.LOAD X,KIP     HOR.LOAD Y,KIP     HOR.LOAD Z,KIP
                 2183.55           29.1900          -44.5700

          MOMENT X,KIP-IN    MOMENT Y,KIP-IN    MOMENT Z,KIP-IN
                 0.00000           22034.8           4350.02


    * THE LOADING IS STATIC *


    * CONTROL PARAMETERS *
        TOLERANCE ON CONVERGENCE OF PILE CAP MOVEMENT        =  0.10000
        TOLERANCE ON DETERMINATION OF PILE DEFLECTIONS       =  0.10000     IN
        MAX NO OF ITERATIONS ALLOWED FOR FOUNDATION ANALYSIS =      100
        MAXIMUM NO OF ITERATIONS ALLOWED FOR PILE ANALYSIS   =      100
        FACTOR TO APPLY THE LOAD IN INCREMENTS               =   1.0000
        MINIMUM FACTOR FOR LOAD INCREMENTS                   =   1.0000
        PRINT RESULTS ONLY AT PILE CAP


    LOAD CASE    :     8
    CASE NAME    : STR III-L2

    LOAD TYPE    : Dead, DL
```

```
     SCALE FACTOR :       1.0000

     * CONCENTRATED LOADS *

    NL  VERT.LOAD HR.LOAD Y HR.LOAD Z  MOMENT X  MOMENT Y  MOMENT Z   COORD X
COORD Y   COORD Z
           KIP       KIP       KIP      KIP-IN    KIP-IN    KIP-IN      FT        FT
       FT
     1   2.18E+03      29.2     -44.6      0.00  2.20E+04  4.35E+03      0.00
0.00      0.00


     * EQUIVALENT CONCENTRATED LOAD AT ORIGIN *

            VER.LOAD X,KIP     HOR.LOAD Y,KIP     HOR.LOAD Z,KIP
                   2183.55           29.1900          -44.5700

            MOMENT X,KIP-IN    MOMENT Y,KIP-IN    MOMENT Z,KIP-IN
                   0.00000           22034.8           4350.02


     * THE LOADING IS STATIC *


     * CONTROL PARAMETERS *
         TOLERANCE ON CONVERGENCE OF PILE CAP MOVEMENT        =  0.10000
         TOLERANCE ON DETERMINATION OF PILE DEFLECTIONS       =  0.10000     IN
         MAX NO OF ITERATIONS ALLOWED FOR FOUNDATION ANALYSIS =      100
         MAXIMUM NO OF ITERATIONS ALLOWED FOR PILE ANALYSIS   =      100
         FACTOR TO APPLY THE LOAD IN INCREMENTS               =   1.0000
         MINIMUM FACTOR FOR LOAD INCREMENTS                   =   1.0000
         PRINT RESULTS ONLY AT PILE CAP


     LOAD CASE    :     9
     CASE NAME    : STR IV-L1

     LOAD TYPE    : Dead, DL
     SCALE FACTOR :       1.0000

     * CONCENTRATED LOADS *

    NL  VERT.LOAD HR.LOAD Y HR.LOAD Z  MOMENT X  MOMENT Y  MOMENT Z   COORD X
COORD Y   COORD Z
           KIP       KIP       KIP      KIP-IN    KIP-IN    KIP-IN      FT        FT
       FT
     1   2.70E+03      30.9      0.00      0.00      0.00  8.26E+03      0.00
0.00      0.00
```

```
* EQUIVALENT CONCENTRATED LOAD AT ORIGIN *

      VER.LOAD X,KIP     HOR.LOAD Y,KIP     HOR.LOAD Z,KIP
             2701.98           30.9100           0.00000

      MOMENT X,KIP-IN    MOMENT Y,KIP-IN    MOMENT Z,KIP-IN
             0.00000           0.00000           8261.37


* THE LOADING IS STATIC *


* CONTROL PARAMETERS *
    TOLERANCE ON CONVERGENCE OF PILE CAP MOVEMENT        =  0.10000
    TOLERANCE ON DETERMINATION OF PILE DEFLECTIONS       =  0.10000     IN
    MAX NO OF ITERATIONS ALLOWED FOR FOUNDATION ANALYSIS =      100
    MAXIMUM NO OF ITERATIONS ALLOWED FOR PILE ANALYSIS   =      100
    FACTOR TO APPLY THE LOAD IN INCREMENTS               =   1.0000
    MINIMUM FACTOR FOR LOAD INCREMENTS                   =   1.0000
    PRINT RESULTS ONLY AT PILE CAP


LOAD CASE    :    10
CASE NAME    : STR IV-L2

LOAD TYPE    : Dead, DL
SCALE FACTOR :       1.0000

* CONCENTRATED LOADS *

   NL  VERT.LOAD HR.LOAD Y HR.LOAD Z  MOMENT X  MOMENT Y  MOMENT Z   COORD X
COORD Y   COORD Z
          KIP       KIP       KIP      KIP-IN    KIP-IN    KIP-IN      FT        FT
      FT
    1   2.70E+03      30.9      0.00      0.00      0.00  8.26E+03      0.00
0.00      0.00


* EQUIVALENT CONCENTRATED LOAD AT ORIGIN *

      VER.LOAD X,KIP     HOR.LOAD Y,KIP     HOR.LOAD Z,KIP
             2701.98           30.9100           0.00000

      MOMENT X,KIP-IN    MOMENT Y,KIP-IN    MOMENT Z,KIP-IN
             0.00000           0.00000           8261.37


* THE LOADING IS STATIC *
```

```
* CONTROL PARAMETERS *
    TOLERANCE ON CONVERGENCE OF PILE CAP MOVEMENT        =  0.10000
    TOLERANCE ON DETERMINATION OF PILE DEFLECTIONS       =  0.10000     IN
    MAX NO OF ITERATIONS ALLOWED FOR FOUNDATION ANALYSIS =      100
    MAXIMUM NO OF ITERATIONS ALLOWED FOR PILE ANALYSIS   =      100
    FACTOR TO APPLY THE LOAD IN INCREMENTS               =   1.0000
    MINIMUM FACTOR FOR LOAD INCREMENTS                   =   1.0000
    PRINT RESULTS ONLY AT PILE CAP


LOAD CASE    :    11
CASE NAME    : STR V-L1

LOAD TYPE    : Dead, DL
SCALE FACTOR :       1.0000

* CONCENTRATED LOADS *

   NL  VERT.LOAD HR.LOAD Y HR.LOAD Z  MOMENT X  MOMENT Y  MOMENT Z   COORD X
COORD Y   COORD Z
          KIP       KIP       KIP      KIP-IN    KIP-IN    KIP-IN      FT        FT
     FT
    1   2.58E+03      44.6     -33.0      0.00  5.00E+04  1.03E+04      0.00
0.00      0.00


* EQUIVALENT CONCENTRATED LOAD AT ORIGIN *

       VER.LOAD X,KIP     HOR.LOAD Y,KIP     HOR.LOAD Z,KIP
              2577.77           44.6400          -32.9700

       MOMENT X,KIP-IN    MOMENT Y,KIP-IN    MOMENT Z,KIP-IN
              0.00000           50000.7           10259.6


* THE LOADING IS STATIC *


* CONTROL PARAMETERS *
    TOLERANCE ON CONVERGENCE OF PILE CAP MOVEMENT        =  0.10000
    TOLERANCE ON DETERMINATION OF PILE DEFLECTIONS       =  0.10000     IN
    MAX NO OF ITERATIONS ALLOWED FOR FOUNDATION ANALYSIS =      100
    MAXIMUM NO OF ITERATIONS ALLOWED FOR PILE ANALYSIS   =      100
    FACTOR TO APPLY THE LOAD IN INCREMENTS               =   1.0000
    MINIMUM FACTOR FOR LOAD INCREMENTS                   =   1.0000
    PRINT RESULTS ONLY AT PILE CAP


LOAD CASE    :    12
CASE NAME    : STR V-L2
```

```
     LOAD TYPE    : Dead, DL
     SCALE FACTOR :       1.0000

     * CONCENTRATED LOADS *

    NL  VERT.LOAD HR.LOAD Y HR.LOAD Z  MOMENT X  MOMENT Y  MOMENT Z   COORD X
COORD Y   COORD Z
           KIP       KIP       KIP      KIP-IN    KIP-IN    KIP-IN      FT        FT
       FT
     1   2.77E+03      44.6     -33.0      0.00  4.06E+04  1.03E+04      0.00
0.00      0.00


     * EQUIVALENT CONCENTRATED LOAD AT ORIGIN *

           VER.LOAD X,KIP     HOR.LOAD Y,KIP     HOR.LOAD Z,KIP
                  2774.08           44.6400          -32.9700

           MOMENT X,KIP-IN    MOMENT Y,KIP-IN    MOMENT Z,KIP-IN
                  0.00000           40577.8           10259.6


     * THE LOADING IS STATIC *


     * CONTROL PARAMETERS *
         TOLERANCE ON CONVERGENCE OF PILE CAP MOVEMENT        =  0.10000
         TOLERANCE ON DETERMINATION OF PILE DEFLECTIONS       =  0.10000     IN
         MAX NO OF ITERATIONS ALLOWED FOR FOUNDATION ANALYSIS =      100
         MAXIMUM NO OF ITERATIONS ALLOWED FOR PILE ANALYSIS   =      100
         FACTOR TO APPLY THE LOAD IN INCREMENTS               =   1.0000
         MINIMUM FACTOR FOR LOAD INCREMENTS                   =   1.0000
         PRINT RESULTS ONLY AT PILE CAP



     * TABLE D *   ARRANGEMENT OF PILE GROUPS

     GROUP  CONN.Z-Z   CONN.Y-Y   PILE PROP  P-Y CURVE  L-S CURVE  T-R CURVE  R-F-L
SET
       1       FIX        FIX         1          0          1 G        1 G        0
       2       FIX        FIX         1          0          1 G        1 G        0
       3       FIX        FIX         1          0          1 G        1 G        0
       4       FIX        FIX         1          0          1 G        1 G        0
       5       FIX        FIX         1          0          1 G        1 G        0
       6       FIX        FIX         1          0          2 G        2 G        0
       7       FIX        FIX         1          0          2 G        2 G        0
       8       FIX        FIX         1          0          2 G        2 G        0
       9       FIX        FIX         1          0          2 G        2 G        0
```

10	FIX	FIX	1	0	2 G	2 G	0
11	FIX	FIX	1	0	3 G	3 G	0
12	FIX	FIX	1	0	3 G	3 G	0
13	FIX	FIX	1	0	3 G	3 G	0
14	FIX	FIX	1	0	3 G	3 G	0
15	FIX	FIX	1	0	3 G	3 G	0

GROUP	CorX,FT	CorY,FT	CorZ,FT	ALPHA,DEG	BETA,DEG	THETA,DEG	GROUND,FT	SPz,KIP-IN	SPy,KIP-IN
1	0.000	-5.000	-15.00	0.000	99.46	0.000	-5.000	0.000	0.000
2	0.000	-5.000	-7.500	0.000	99.46	0.000	-5.000	0.000	0.000
3	0.000	-5.000	0.000	0.000	99.46	0.000	-5.000	0.000	0.000
4	0.000	-5.000	7.500	0.000	99.46	0.000	-5.000	0.000	0.000
5	0.000	-5.000	15.00	0.000	99.46	0.000	-5.000	0.000	0.000
6	0.000	0.000	-15.00	90.00	90.00	0.000	-5.000	0.000	0.000
7	0.000	0.000	-7.500	90.00	90.00	0.000	-5.000	0.000	0.000
8	0.000	0.000	0.000	90.00	90.00	0.000	-5.000	0.000	0.000
9	0.000	0.000	7.500	90.00	90.00	0.000	-5.000	0.000	0.000
10	0.000	0.000	15.00	90.00	90.00	0.000	-5.000	0.000	0.000
11	0.000	5.000	-15.00	0.000	80.54	0.000	-5.000	0.000	0.000
12	0.000	5.000	-7.500	0.000	80.54	0.000	-5.000	0.000	0.000
13	0.000	5.000	0.000	0.000	80.54	0.000	-5.000	0.000	0.000
14	0.000	5.000	7.500	0.000	80.54	0.000	-5.000	0.000	0.000
15	0.000	5.000	15.00	0.000	80.54	0.000	-5.000	0.000	0.000

```
* TABLE E *   PILE GEOMETRY AND PROPERTIES
              PILE TYPE = 1 - DRIVEN PILE
                        = 2 - DRILLED SHAFT
```

PROP	SECTS	INC	PILE TYPE	LENGTH, FT
1	1	100	1	76.000

```
* PILE SECTIONS *
```

```
  PROP    SECT      FROM,FT         TO,FT    CROSS SECT
    1       1        0.00000        76.0000       1

* PILE CROSS SECTIONS *

 CROSS SECTION       :     1
 SECTION NAME        : HP14X117
 TYPE                :  ELASTIC
 CROSS SECTION TYPE  : H SECTION
 EQUIVALENT DIAMETER :       13.4000 IN
 EXTERNAL WIDTH      :       14.7800 IN
 EXTERNAL DEPTH      :       14.0800 IN
 FLANGE THICKNESS    :       0.68000 IN
 WEB THICKNESS       :       0.68000 IN
 YOUNG MODULUS       :       29000.0 KIP/IN**2
 SHEAR MODULUS       :       11165.0 KIP/IN**2

* PILE CROSS SECTIONS PROPERTIES *

         ELASTIC SECTIONS

   SECT         DIAM,IN     PERIM,IN   AREA,IN**2   Iz,IN**4    Iy,IN**4
GJ,KIP-IN**2   Mn,KIP-IN    Vn,KIP
     1           13.400       57.7200      28.274      1089.4      316.70
1.5700E+07      0.0000      0.0000



* TABLE F *   SOIL DATA


SOILS INFORMATION

    GROUND SURFACE          =     -5.00000  FT

    5 LAYER(S) OF SOIL

    LAYER  1
    THE SOIL IS A SAND
                                                      TOP OF LAYER    BOTTOM OF
LAYER
    X COORDINATE                          (FT)       -5.00000           0.00000
    EFFECTIVE UNIT WEIGHT         (KIP/FT**3)        0.13000           0.13000
    FRICTION ANGLE                  (DEGREES)        34.0000           34.0000
    P-Y SUBGRADE MODULUS          (KIP/IN**3)        0.22500           0.22500
    ULTIMATE UNIT SIDE FRICTION   (KIP/FT**2)    4.80703E-03 (P)       0.28842
(P)
    ULTIMATE UNIT TIP RESISTANCE  (KIP/FT**2)        0.00000           0.00000
```

```
        LAYER  2
        THE SOIL IS A STIFF CLAY WITHOUT FREE WATER
                                                        TOP OF LAYER    BOTTOM OF
LAYER
        X COORDINATE                          (FT)        0.00000          3.00000
        EFFECTIVE UNIT WEIGHT         (KIP/FT**3)        0.12500          0.12500
        UNDRAINED COHESION, C         (KIP/FT**2)        1.50000          1.50000
        STRAIN AT 50% STRESS                           7.00000E-03      7.00000E-03
        ULTIMATE UNIT SIDE FRICTION   (KIP/FT**2)        0.60851 (P)      0.35795
(P)
        ULTIMATE UNIT TIP RESISTANCE  (KIP/FT**2)        0.00000          0.00000

        LAYER  3
        THE SOIL IS A STIFF CLAY WITHOUT FREE WATER
                                                        TOP OF LAYER    BOTTOM OF
LAYER
        X COORDINATE                          (FT)        3.00000          5.00000
        EFFECTIVE UNIT WEIGHT         (KIP/FT**3)        0.12000          0.12000
        UNDRAINED COHESION, C         (KIP/FT**2)        0.50000          0.50000
        STRAIN AT 50% STRESS                           1.00000E-02      1.00000E-02
        ULTIMATE UNIT SIDE FRICTION   (KIP/FT**2)        0.35795 (P)      0.28118
(P)
        ULTIMATE UNIT TIP RESISTANCE  (KIP/FT**2)        0.00000          0.00000

        LAYER  4
        THE SOIL IS A SOFT CLAY
                                                        TOP OF LAYER    BOTTOM OF
LAYER
        X COORDINATE                          (FT)        5.00000          74.0000
        EFFECTIVE UNIT WEIGHT         (KIP/FT**3)      0.0376000        0.0376000
        UNDRAINED COHESION, C         (KIP/FT**2)        0.25000          0.25000
        STRAIN AT 50% STRESS                            0.0200000        0.0200000
        ULTIMATE UNIT SIDE FRICTION   (KIP/FT**2)        0.28118 (P)      222.045
(P)
        ULTIMATE UNIT TIP RESISTANCE  (KIP/FT**2)        0.00000          0.00000

        LAYER  5
        THE LAYER IS A WEAK ROCK
                                                        TOP OF LAYER    BOTTOM OF
LAYER
        X COORDINATE                          (FT)        74.0000          84.0000
        EFFECTIVE UNIT WEIGHT         (KIP/FT**3)      0.0876000        0.0876000
        UNIAXIAL COMPRESSIVE STRENGTH (KIP/IN**2)        15.0000          15.0000
        YOUNG MODULUS,ER              (KIP/IN**2)        0.00000          0.00000
        KRM                                            1.00000E-03      1.00000E-03
        RQD                                   (%)        85.0000          85.0000
        ULTIMATE UNIT SIDE FRICTION   (KIP/FT**2)        216.000 (P)      216.000
(P)
        ULTIMATE UNIT TIP RESISTANCE  (KIP/FT**2)        19440.0 (R)      19440.0
(R)
```

```
  Notes :  Program estimated values for listed parameters
           if zero input values were entered:
           (P) ULTIMATE UNIT SIDE FRICTION for Driven Piles
           (R) ULTIMATE UNIT TIP RESISTANCE for Driven Piles


* TABLE H *   AXIAL LOAD VS DISPLACEMENT

AXIAL LOAD-DISPLACEMENT CURVES GENERATED INTERNALLY

  NUM OF CURVES  3

   CURVE  1          NUM OF POINTS 19

  DISPLACEMENT, IN       AXIAL LOAD,KIP
         -3.29308             -1237.06
         -2.29308             -1237.06
         -1.79308             -1237.05
         -1.46143             -1299.01
         -1.31833             -1214.81
         -0.33391             -358.602
         -0.18592             -227.746
       -0.0406755             -67.0764
     -3.98367E-03             -6.37095
          0.00000              0.00000
        0.0227285              37.2101
          0.21938              261.118
          0.88467              858.399
          1.71915              1606.57
          4.30231              3898.14
          5.52483              4951.97
          6.03858              5054.09
          6.53858              5054.09
          7.53858              5054.09

   CURVE  2          NUM OF POINTS 19

  DISPLACEMENT, IN       AXIAL LOAD,KIP
         -4.09197             -1969.22
         -3.09197             -1969.22
         -2.59197             -1969.22
         -2.29503             -2062.99
         -2.15800             -1984.43
         -0.55388             -559.645
         -0.29964             -332.134
       -0.0741338             -114.758
     -6.79792E-03             -10.8136
          0.00000              0.00000
```

```
        0.0298254              48.6842
          0.28475              320.777
          1.20456              1151.45
          2.34730              2182.64
          5.12858              4655.34
          6.32372              5684.13
          6.83747              5786.25
          7.33747              5786.25
          8.33747              5786.25

   CURVE  3          NUM OF POINTS 19

  DISPLACEMENT, IN       AXIAL LOAD,KIP
         -3.29308             -1237.27
         -2.29308             -1237.26
         -1.79308             -1237.25
         -1.46143             -1299.20
         -1.31833             -1215.00
         -0.33391             -358.757
         -0.18592             -227.879
       -0.0406757             -67.1227
     -3.98368E-03             -6.37360
          0.00000              0.00000
        0.0227286              37.2329
          0.21938              261.256
          0.88467              858.585
          1.71915              1606.77
          4.30231              3898.35
          5.52483              4952.18
          6.03858              5054.30
          6.53858              5054.30
          7.53858              5054.30


* TABLE I *   TORS. MOM. VS ANGLE ROT.

TORQUE-ROTATION CURVES GENERATED INTERNALLY

  NUM OF CURVES  3

   CURVE  1          NUM OF POINTS 19

    ROT. ANGLE,Rad.     TORS.MOMEN,KIP-IN
         -0.74707             -8205.30
         -0.59781             -8205.30
         -0.52319             -8205.30
         -0.48541             -8585.68
         -0.45509             -8190.63
         -0.12113             -2497.61
```

```
    -0.0711153              -1641.06
    -0.0213194              -734.192
  -2.25596E-03              -97.4633
       0.00000               0.00000
   2.25596E-03               97.4633
     0.0213194               734.192
     0.0711153               1641.06
       0.12113               2497.61
       0.45509               8190.63
       0.48541               8585.68
       0.52319               8205.30
       0.59781               8205.30
       0.74707               8205.30

CURVE  2          NUM OF POINTS 19

 ROT. ANGLE,Rad.     TORS.MOMEN,KIP-IN
      -1.03054              -13190.2
      -0.88129              -13190.2
      -0.80666              -13190.2
      -0.77447              -13668.2
      -0.75484              -13461.2
      -0.23063              -4428.81
      -0.12453              -2586.21
    -0.0344848              -1005.46
  -4.26845E-03              -191.241
       0.00000               0.00000
   4.26845E-03               191.241
     0.0344848               1005.46
       0.12453               2586.21
       0.23063               4428.81
       0.75484               13461.2
       0.77447               13668.2
       0.80666               13190.2
       0.88129               13190.2
       1.03054               13190.2

CURVE  3          NUM OF POINTS 19

 ROT. ANGLE,Rad.     TORS.MOMEN,KIP-IN
      -0.74707              -8205.30
      -0.59781              -8205.30
      -0.52319              -8205.30
      -0.48541              -8585.68
      -0.45509              -8190.63
      -0.12113              -2497.61
    -0.0711153              -1641.06
    -0.0213194              -734.192
  -2.25596E-03              -97.4633
       0.00000               0.00000
```

2.25596E-03	97.4633
0.0213194	734.192
0.0711153	1641.06
0.12113	2497.61
0.45509	8190.63
0.48541	8585.68
0.52319	8205.30
0.59781	8205.30
0.74707	8205.30

* TABLE J * MOMENT CURVATURE SETS

* TABLE K * REDUCTION FACTORS

REDUCTION FACTORS FOR CLOSELY-SPACED PILE GROUPS ALONG Y-DIRECTION

GROUP NO	P-FACTOR	Y-FACTOR
1	0.8600	1.0000
2	0.8600	1.0000
3	0.8600	1.0000
4	0.8600	1.0000
5	0.8600	1.0000
6	0.7210	1.0000
7	0.7210	1.0000
8	0.7210	1.0000
9	0.7210	1.0000
10	0.7210	1.0000
11	0.5820	1.0000
12	0.5820	1.0000
13	0.5820	1.0000
14	0.5820	1.0000
15	0.5820	1.0000

REDUCTION FACTORS FOR CLOSELY-SPACED PILE GROUPS ALONG Z-DIRECTION

GROUP NO	P-FACTOR	Y-FACTOR
1	0.8730	1.0000
2	0.8730	1.0000
3	0.8730	1.0000
4	0.9730	1.0000
5	0.9870	1.0000
6	0.8730	1.0000
7	0.8730	1.0000
8	0.8730	1.0000

9	0.9730	1.0000
10	0.9870	1.0000
11	0.8730	1.0000
12	0.8730	1.0000
13	0.8730	1.0000
14	0.9730	1.0000
15	0.9870	1.0000

PILE FOUNDATION ANALYSIS

SUMMARY OF GROUP RESULTS

P-MULTIPLIERS

GROUP ANALYSIS

DEPTH TO FIXITY

PILE HEAD FIXED CASE – INPUT

PILE HEAD FIXED CASE – OUTPUT

PILE HEAD PINNED CASE – INPUT

PILE HEAD PINNED CASE – OUTPUT

```
==========================================================================

                 GROUP for Windows, Version 2019.11.10

                  Serial Number : 235486675

                  Analysis of A Group of Piles
               Subjected to Axial and Lateral Loading

                (c) Copyright ENSOFT, Inc., 1987-2018
                      All Rights Reserved

==========================================================================


--------------------------------------------------------------------------
                     Time and Date of Analysis
--------------------------------------------------------------------------

          Date:  August 29, 2025     Time:  12:43:31



            *****     COMPUTATION RESULTS     *****



New Group




            *****     LOAD CASES RESULTS      *****



LOAD CASE :     1
CASE NAME : SER-L1

LOAD TYPE : Dead, DL

  REDUCTION FACTORS FOR CLOSELY-SPACED PILE GROUPS, COMBINED Y AND Z DIRECTIONS
  ESTIMATED USING MOVEMENT IN THE DIRECTION OF PILE CAP DISPLACEMENTS

       GROUP NO     P-FACTOR     Y-FACTOR

           1           0.8600       1.0000
           2           0.8600       1.0000
```

3	0.8600	1.0000
4	0.8600	1.0000
5	0.8600	1.0000
6	0.7210	1.0000
7	0.7210	1.0000
8	0.7210	1.0000
9	0.7210	1.0000
10	0.7210	1.0000
11	0.5820	1.0000
12	0.5820	1.0000
13	0.5820	1.0000
14	0.5820	1.0000
15	0.5820	1.0000

* TABLE L * COMPUTATION ON PILE CAP

* EQUIVALENT CONCENTRATED LOAD AT ORIGIN *

VERT. LOAD,KIPS	HOR. LOAD Y,KIPS	HOR. LOAD Z,KIPS
2023.07	44.8400	-27.9100

MOMENT X ,KIP-IN	MOMENT Y,KIP-IN	MOMENT Z,KIP-IN
0.00000	38374.6	10703.2

* DISPLACEMENT OF GROUPED PILE FOUNDATION AT ORIGIN *

VERTICAL ,IN	HORIZONTAL Y,IN	HORIZONTAL Z,IN
0.11036	1.47068E-03	1.13944E-04

ANGLE ROT. X,RAD	ANGLE ROT. Y,RAD	ANGLE ROT. Z,RAD
-6.75159E-07	1.38812E-04	1.95613E-04

* PASSIVE RESISTANCE IN PILE CAP *

HOR. LOAD Y,KIP	HOR. LOAD Z,KIP	POSITION, FT	EQ. DIAM, FT
4.98150	1.24619E-03	-1.55556	35.1141

THE GLOBAL STRUCTURAL COORDINATE SYSTEM
---

* PILE TOP DISPLACEMENTS *

PILE GROUP	DISP. X,IN	DISP. Y,IN	DISP. Z,IN	ROT. X,RAD	ROT. Y,RAD	ROT. Z,RAD
**********	**********	**********	**********	**********	**********	**********
1	0.097110	1.3491E-03	1.5445E-04	-6.7516E-07	1.3881E-04	1.9561E-04
2	0.1096	1.4099E-03	1.5445E-04	-6.7516E-07	1.3881E-04	1.9561E-04
3	0.1221	1.4707E-03	1.5445E-04	-6.7516E-07	1.3881E-04	1.9561E-04
4	0.1346	1.5314E-03	1.5445E-04	-6.7516E-07	1.3881E-04	1.9561E-04
5	0.1471	1.5922E-03	1.5445E-04	-6.7516E-07	1.3881E-04	1.9561E-04
6	0.085373	1.3491E-03	1.1394E-04	-6.7516E-07	1.3881E-04	1.9561E-04
7	0.097866	1.4099E-03	1.1394E-04	-6.7516E-07	1.3881E-04	1.9561E-04
8	0.1104	1.4707E-03	1.1394E-04	-6.7516E-07	1.3881E-04	1.9561E-04
9	0.1229	1.5314E-03	1.1394E-04	-6.7516E-07	1.3881E-04	1.9561E-04
10	0.1353	1.5922E-03	1.1394E-04	-6.7516E-07	1.3881E-04	1.9561E-04
11	0.073636	1.3491E-03	7.3434E-05	-6.7516E-07	1.3881E-04	1.9561E-04
12	0.086129	1.4099E-03	7.3434E-05	-6.7516E-07	1.3881E-04	1.9561E-04
13	0.098622	1.4707E-03	7.3434E-05	-6.7516E-07	1.3881E-04	1.9561E-04
14	0.1111	1.5314E-03	7.3434E-05	-6.7516E-07	1.3881E-04	1.9561E-04
15	0.1236	1.5922E-03	7.3434E-05	-6.7516E-07	1.3881E-04	1.9561E-04
MINIMUM	0.073636	1.3491E-03	7.3434E-05	-6.7516E-07	1.3881E-04	1.9561E-04
Pile N.	11	1	11	1	1	1
MAXIMUM	0.1471	1.5922E-03	1.5445E-04	-6.7516E-07	1.3881E-04	1.9561E-04
Pile N.	5	5	1	1	1	1

* PILE TOP REACTIONS *

PILE GROUP	FOR. X,KIP	FOR. Y,KIP	FOR. Z,KIP	MOM X,KIP-IN	MOM Y,KIP-IN	MOM Z,KIP-IN
**********	**********	**********	**********	**********	**********	**********

```
        1            120.54      -7.5653      -1.1772       7.5368       51.404
  458.49
        2            134.45      -9.3889      -1.1333       7.3819       50.474
  479.81
        3            148.36      -11.207      -1.0943       7.2474       49.667
  503.96
        4            162.26      -13.110      -1.0608       7.1166       48.883
  519.56
        5            176.15      -15.011      -1.0305       7.0002       48.183
  537.10
        6            107.97       4.0677      -3.2204    -0.030249       153.58
  114.48
        7            121.31       4.0976      -3.2073    -0.030249       153.34
  115.06
        8            134.64       4.1272      -3.1944    -0.030249       153.10
  115.64
        9            147.97       4.1565      -3.1817    -0.030249       152.87
  116.22
       10            161.31       4.1854      -3.1693    -0.030249       152.64
  116.79
       11            93.698       11.654      -1.5747      -9.3182       61.745
 -9.8742
       12            107.67       13.273      -1.4353      -8.8258       58.790
 -36.969
       13            121.63       14.989      -1.3289      -8.4369       56.456
 -61.599
       14            135.58       16.770      -1.2446      -8.1206       54.558
 -84.512
       15            149.52       18.600      -1.1758      -7.8537       52.956
 -106.04

     MINIMUM         93.698      -15.011      -3.2204      -9.3182       48.183
 -106.04
     Pile N.         11            5            6           11            5
  15
     MAXIMUM         176.15       18.600      -1.0305       7.5368       153.58
  537.10
     Pile N.          5           15            5            1            6
   5


     THE PILE COORDINATE SYSTEM (LOCAL AXES)
     ---------------------------------------

     * PILE TOP DISPLACEMENTS *

    PILE GROUP   DISP. x,IN   DISP. y,IN   DISP. z,IN   ROT. x,RAD   ROT. y,RAD
ROT. z,RAD
    **********  ***********  ***********  ***********  ***********  ***********
***********
```

```
          1          0.095567     0.017292   1.5445E-04  -2.3481E-05   1.3681E-04
1.9561E-04
          2            0.1079     0.019405   1.5445E-04  -2.3481E-05   1.3681E-04
1.9561E-04
          3            0.1202     0.021518   1.5445E-04  -2.3481E-05   1.3681E-04
1.9561E-04
          4            0.1325     0.023631   1.5445E-04  -2.3481E-05   1.3681E-04
1.9561E-04
          5            0.1448     0.025745   1.5445E-04  -2.3481E-05   1.3681E-04
1.9561E-04
          6          0.085373   1.1394E-04  -1.3491E-03  -6.7516E-07   1.9561E-04
-1.3881E-04
          7          0.097866   1.1394E-04  -1.4099E-03  -6.7516E-07   1.9561E-04
-1.3881E-04
          8            0.1104   1.1394E-04  -1.4707E-03  -6.7516E-07   1.9561E-04
-1.3881E-04
          9            0.1229   1.1394E-04  -1.5314E-03  -6.7516E-07   1.9561E-04
-1.3881E-04
         10            0.1353   1.1394E-04  -1.5922E-03  -6.7516E-07   1.9561E-04
-1.3881E-04
         11          0.072857    -0.010772   7.3434E-05   2.2149E-05   1.3704E-04
1.9561E-04
         12          0.085190    -0.012765   7.3434E-05   2.2149E-05   1.3704E-04
1.9561E-04
         13          0.097523    -0.014759   7.3434E-05   2.2149E-05   1.3704E-04
1.9561E-04
         14            0.1099    -0.016752   7.3434E-05   2.2149E-05   1.3704E-04
1.9561E-04
         15            0.1222    -0.018746   7.3434E-05   2.2149E-05   1.3704E-04
1.9561E-04

       MINIMUM       0.072857    -0.018746  -1.5922E-03  -2.3481E-05   1.3681E-04
-1.3881E-04
       Pile N.         11           15           10            1            1
    6
       MAXIMUM         0.1448     0.025745   1.5445E-04   2.2149E-05   1.9561E-04
1.9561E-04
       Pile N.          5            5            1           11            6
    1

       * PILE TOP REACTIONS *

      PILE GROUP   AXIAL,KIP    LAT. y,KIP   LAT. z,KIP MOM x,KIP-IN MOM y,KIP-IN
MOM z,KIP-IN
      **********  ***********  ***********  ***********  ***********  ***********
***********
          1            120.15       12.350      -1.1772      -1.0144       51.944
   458.49
          2            134.17       12.837      -1.1333      -1.0144       51.001
   479.81
```

```
        3            148.19       13.330      -1.0943      -1.0144       50.183
 503.96
        4            162.21       13.737      -1.0608      -1.0144       49.387
 519.56
        5            176.23       14.146      -1.0305      -1.0144       48.679
 537.10
        6            107.97      -3.2204      -4.0677    -0.030249       114.48
-153.58
        7            121.31      -3.2073      -4.0976    -0.030249       115.06
-153.34
        8            134.64      -3.1944      -4.1272    -0.030249       115.64
-153.10
        9            147.97      -3.1817      -4.1565    -0.030249       116.22
-152.87
       10            161.31      -3.1693      -4.1854    -0.030249       116.79
-152.64
       11            94.339      -3.9049      -1.5747       0.9569       62.437
-9.8742
       12            108.39      -4.6041      -1.4353       0.9569       59.441
-36.969
       13            122.44      -5.2056      -1.3289       0.9569       57.075
-61.599
       14            136.49      -5.7414      -1.2446       0.9569       55.151
-84.512
       15            150.54      -6.2274      -1.1758       0.9569       53.527
-106.04

     MINIMUM         94.339      -6.2274      -4.1854      -1.0144       48.679
-153.58
     Pile N.         11           15           10            1            5
  6
     MAXIMUM         176.23       14.146      -1.0305       0.9569       116.79
 537.10
     Pile N.          5            5            5           11           10
  5

    PILE GROUP   STRESS,KIP/IN**2
    **********  ****************
        1            7.2755
        2            7.8871
        3            8.5172
        4            9.0986
        5            9.6927
        6            6.4182
        7            6.9008
        8            7.3833
        9            7.8658
       10            8.3482
       11            4.6588
       12            5.1114
```

```
         13            5.5959
         14            6.1046
         15            6.6310

       MINIMUM         4.6588
       Pile N.         11
       MAXIMUM         9.6927
       Pile N.          5

       * EFFECTS FOR LATERALLY LOADED PILE *

       * MINIMUM VALUES AND LOCATIONS *

     PILE     DISPL.      DISPL.      MOMENT      MOMENT       SHEAR       SHEAR
SOIL REACT  SOIL REACT     TOTAL    FLEX. RIG.  FLEX. RIG.
               y-DIR       z-DIR       z-DIR       y-DIR       y-DIR       z-DIR
  y-DIR       z-DIR      STRESS       z-DIR       y-DIR
                IN          IN        KIP-IN      KIP-IN        KIP         KIP
 KIP/IN      KIP/IN     KIP/IN**2   KIP-IN**2   KIP-IN**2
    ******  **********  **********  **********  **********  **********  **********
**********  **********  **********  **********  **********
        1  -5.9744E-04 -2.0120E-03     -458.49     -3.4235     -0.8287     -1.1841
-9.2243E-03   -0.027546      4.2493  3.1594E+07  9.1843E+06
     x(FT)      17.480      3.8000      0.0000      11.400      14.440      0.0000
   18.240      3.0400      63.080      0.0000      0.0000
        2  -7.2321E-04 -2.0523E-03     -479.81     -3.5993     -0.9467     -1.1404
-0.010347   -0.026180      4.7452  3.1594E+07  9.1843E+06
     x(FT)      17.480      3.8000      0.0000      11.400      13.680      0.0000
   18.240      3.0400      63.080      0.0000      0.0000
        3  -1.0707E-03 -2.0854E-03     -503.96     -3.9118     -1.2919     -1.1015
-0.013515   -0.024947      5.2410  3.1594E+07  9.1843E+06
     x(FT)      16.720      3.8000      0.0000      11.400      12.920      0.0000
   17.480      3.0400      63.080      0.0000      0.0000
        4  -9.1595E-04 -2.1239E-03     -519.56     -3.8137     -1.1090     -1.0682
-0.011726   -0.023910      5.7369  3.1594E+07  9.1843E+06
     x(FT)      17.480      3.8000      0.0000      11.400      13.680      0.0000
   18.240      3.0400      63.080      0.0000      0.0000
        5  -9.1741E-04 -2.1572E-03     -537.10     -3.8273     -1.0920     -1.0380
-0.011602   -0.022962      6.2327  3.1594E+07  9.1843E+06
     x(FT)      17.480      3.8000      0.0000      11.400      14.440      0.0000
   19.000      3.0400      63.080      0.0000      0.0000
        6  -2.5784E-03 -3.2863E-03     -10.431     -5.2108     -3.2279     -4.0140
-0.067860     -0.1030      3.8187  3.1594E+07  9.1843E+06
     x(FT)      4.5600      2.2800      12.920      9.1200      0.0000      0.0000
   2.2800      2.2800      58.520      0.0000      0.0000
        7  -2.5811E-03 -3.3312E-03     -10.443     -5.2798     -3.2150     -4.0420
-0.067483     -0.1037      4.2903  3.1594E+07  9.1843E+06
     x(FT)      4.5600      2.2800      12.920      8.3600      0.0000      0.0000
   2.2800      2.2800      57.760      0.0000      0.0000
        8  -2.5837E-03 -3.3761E-03     -10.454     -5.3597     -3.2024     -4.0697
```

```
-0.067110     -0.1045      4.7619  3.1594E+07  9.1843E+06
     x(FT)      4.5600      2.2800      12.920      8.3600      0.0000      0.0000
   2.2800      2.2800      57.760      0.0000      0.0000
        9  -2.5864E-03 -3.4212E-03     -10.466     -5.4397     -3.1901     -4.0970
-0.066740     -0.1052      5.2335  3.1594E+07  9.1843E+06
     x(FT)      4.5600      2.2800      12.920      8.3600      0.0000      0.0000
   2.2800      2.2800      57.760      0.0000      0.0000
       10  -2.5890E-03 -3.4663E-03     -10.477     -5.5199     -3.1779     -4.1241
-0.066374     -0.1059      5.7051  3.1594E+07  9.1843E+06
     x(FT)      4.5600      2.2800      12.920      8.3600      0.0000      0.0000
   2.2800      2.2800      57.760      0.0000      0.0000
       11    -0.010772 -1.6526E-03     -74.966     -2.8689     -3.6858     -1.5791
  -0.1031   -0.040480      3.3366  3.1594E+07  9.1843E+06
     x(FT)      0.0000      3.0400      3.0400      8.3600      0.0000      0.0000
   3.0400      3.0400      61.560      0.0000      0.0000
       12    -0.012765 -1.7588E-03     -72.581     -3.0938     -4.3627     -1.4399
  -0.1159   -0.035224      3.8335  3.1594E+07  9.1843E+06
     x(FT)      0.0000      3.0400      3.8000      9.1200      0.0000      0.0000
   3.0400      3.0400      61.560      0.0000      0.0000
       13    -0.014759 -1.8451E-03     -71.299     -3.3133     -4.9434     -1.3336
  -0.1261   -0.031448      4.3304  3.1594E+07  9.1843E+06
     x(FT)      0.0000      3.0400      4.5600      9.1200      0.0000      0.0000
   3.0400      3.0400      62.320      0.0000      0.0000
       14    -0.016752 -1.9169E-03     -69.953     -3.4929     -5.4596     -1.2496
  -0.1346   -0.028578      4.8273  3.1594E+07  9.1843E+06
     x(FT)      0.0000      3.0400      4.5600      9.1200      0.0000      0.0000
   3.0400      3.0400      62.320      0.0000      0.0000
       15    -0.018746 -1.9791E-03     -69.681     -3.6278     -5.9272     -1.1810
  -0.1420   -0.026322      5.3242  3.1594E+07  9.1843E+06
     x(FT)      0.0000      3.0400      6.0800      9.1200      0.0000      0.0000
   3.0400      3.0400      63.080      0.0000      0.0000

      Min.   -0.018746 -3.4663E-03     -537.10     -5.5199     -5.9272     -4.1241
  -0.1420     -0.1059      3.3366  3.1594E+07  9.1843E+06
   Pile N.      15          10           5          10          15          10
   15          10          11           1           1

       * MAXIMUM VALUES AND LOCATIONS *

     PILE     DISPL.      DISPL.      MOMENT      MOMENT       SHEAR       SHEAR
SOIL REACT  SOIL REACT     TOTAL    FLEX. RIG.  FLEX. RIG.
               y-DIR       z-DIR       z-DIR       y-DIR       y-DIR       z-DIR
  y-DIR       z-DIR      STRESS       z-DIR       y-DIR
                IN          IN        KIP-IN      KIP-IN        KIP         KIP
 KIP/IN      KIP/IN     KIP/IN**2   KIP-IN**2   KIP-IN**2
    ******  **********  **********  **********  **********  **********  **********
**********  **********  **********  **********  **********
        1     0.018731  1.5445E-04      63.213      51.944      11.931    0.060856
   0.2398  9.4056E-04      7.2755  3.1594E+07  9.1843E+06
     x(FT)      1.5200      0.0000      11.400      0.0000      0.0000      13.680
```

```
   3.0400      15.200      0.0000      0.0000      0.0000
        2     0.020743  1.5445E-04      71.474      51.001      12.390    0.066864
   0.2469  9.9913E-04      7.8871  3.1594E+07  9.1843E+06
     x(FT)      1.5200      0.0000      11.400      0.0000      0.0000      12.920
   3.0400      15.200      0.0000      0.0000      0.0000
        3     0.022741  1.5445E-04      88.191      50.183      12.856    0.083203
   0.2528  1.2216E-03      8.5172  3.1594E+07  9.1843E+06
     x(FT)      1.5200      0.0000      12.160      0.0000      0.0000      12.920
   3.0400      15.200      0.0000      0.0000      0.0000
        4     0.024781  1.5445E-04      85.029      49.387      13.237    0.070198
   0.2601  1.0056E-03      9.0986  3.1594E+07  9.1843E+06
     x(FT)      1.5200      0.0000      11.400      0.0000      0.0000      12.920
   3.0400      15.960      0.0000      0.0000      0.0000
        5     0.026822  1.5445E-04      88.771      48.679      13.622    0.065606
   0.2664  9.3825E-04      9.6927  3.1594E+07  9.1843E+06
     x(FT)      0.7600      0.0000      11.400      0.0000      0.0000      12.920
   3.0400      15.960      0.0000      0.0000      0.0000
        6   1.1394E-04  5.3283E-05      153.58      114.48      0.1505    0.080535
2.2960E-03  1.7140E-03      6.4182  3.1594E+07  9.1843E+06
     x(FT)      0.0000      14.440      0.0000      0.0000      16.720      12.160
   19.000      15.960      0.0000      0.0000      0.0000
        7   1.1394E-04  5.4382E-05      153.34      115.06      0.1506    0.081697
2.2983E-03  1.7281E-03      6.9008  3.1594E+07  9.1843E+06
     x(FT)      0.0000      14.440      0.0000      0.0000      16.720      12.160
   19.000      15.960      0.0000      0.0000      0.0000
        8   1.1394E-04  5.5487E-05      153.10      115.64      0.1508    0.082863
2.3005E-03  1.7423E-03      7.3833  3.1594E+07  9.1843E+06
     x(FT)      0.0000      14.440      0.0000      0.0000      16.720      12.160
   19.000      15.960      0.0000      0.0000      0.0000
        9   1.1394E-04  5.6598E-05      152.87      116.22      0.1509    0.084032
2.3028E-03  1.7566E-03      7.8658  3.1594E+07  9.1843E+06
     x(FT)      0.0000      14.440      0.0000      0.0000      16.720      12.160
   19.000      15.960      0.0000      0.0000      0.0000
       10   1.1394E-04  5.7716E-05      152.64      116.79      0.1511    0.085203
2.3049E-03  1.7710E-03      8.3482  3.1594E+07  9.1843E+06
     x(FT)      0.0000      14.440      0.0000      0.0000      16.720      12.160
   19.000      15.960      0.0000      0.0000      0.0000
       11   1.0538E-03  7.3434E-05      9.8742      62.437      0.7908    0.038811
6.8712E-03  5.5662E-04      4.6588  3.1594E+07  9.1843E+06
     x(FT)      10.640      0.0000      0.0000      0.0000      6.8400      12.160
   12.160      15.960      0.0000      0.0000      0.0000
       12   9.4083E-04  7.3434E-05      36.969      59.441      0.7289    0.042003
6.4469E-03  5.9030E-04      5.1114  3.1594E+07  9.1843E+06
     x(FT)      11.400      0.0000      0.0000      0.0000      7.6000      12.160
   12.920      15.960      0.0000      0.0000      0.0000
       13   8.8511E-04  7.3434E-05      61.599      57.075      0.6988    0.044693
6.2971E-03  6.1631E-04      5.5959  3.1594E+07  9.1843E+06
     x(FT)      12.160      0.0000      0.0000      0.0000      8.3600      12.160
   14.440      15.960      0.0000      0.0000      0.0000
       14   8.7233E-04  7.3434E-05      84.512      55.151      0.6967    0.046860
```

```
6.3477E-03  6.3499E-04      6.1046  3.1594E+07  9.1843E+06
     x(FT)      12.920      0.0000      0.0000      0.0000      9.1200      12.160
   15.200      15.960      0.0000      0.0000      0.0000
       15   8.8160E-04  7.7578E-05      106.04      53.527      0.7096    0.048427
9.6363E-03  6.4814E-04      6.6310  3.1594E+07  9.1843E+06
     x(FT)      13.680      15.200      0.0000      0.0000      9.8800      12.160
   22.800      16.720      0.0000      0.0000      0.0000

      Max.    0.026822  1.5445E-04      153.58      116.79      13.622    0.085203
   0.2664  1.7710E-03      9.6927  3.1594E+07  9.1843E+06
   Pile N.       5           1           6          10           5          10
    5          10           5           1           1


     LOAD CASE :     2
     CASE NAME : SER-L2

     LOAD TYPE : Dead, DL

       REDUCTION FACTORS FOR CLOSELY-SPACED PILE GROUPS, COMBINED Y AND Z DIRECTIONS
       ESTIMATED USING MOVEMENT IN THE DIRECTION OF PILE CAP DISPLACEMENTS

            GROUP NO     P-FACTOR     Y-FACTOR

                1          0.8701       1.0000
                2          0.8701       1.0000
                3          0.8701       1.0000
                4          0.9489       1.0000
                5          0.9601       1.0000
                6          0.8415       1.0000
                7          0.8415       1.0000
                8          0.8415       1.0000
                9          0.9227       1.0000
               10          0.9342       1.0000
               11          0.8171       1.0000
               12          0.8171       1.0000
               13          0.8171       1.0000
               14          0.9006       1.0000
               15          0.9123       1.0000


     * TABLE L *   COMPUTATION ON PILE CAP


     * EQUIVALENT CONCENTRATED LOAD AT ORIGIN *


           VERT. LOAD,KIPS    HOR. LOAD Y,KIPS   HOR. LOAD Z,KIPS
```

```
              2168.48            44.8400           -27.9100

        MOMENT X ,KIP-IN    MOMENT Y,KIP-IN    MOMENT Z,KIP-IN
              0.00000            31394.6            10703.2


     * DISPLACEMENT OF GROUPED PILE FOUNDATION AT ORIGIN *


          VERTICAL ,IN      HORIZONTAL Y,IN     HORIZONTAL Z,IN
              0.11904        1.79332E-03        1.66102E-04

        ANGLE ROT. X,RAD    ANGLE ROT. Y,RAD    ANGLE ROT. Z,RAD
           4.27629E-07        1.13294E-04        2.00058E-04


     * PASSIVE RESISTANCE IN PILE CAP *

            HOR. LOAD Y,KIP    HOR. LOAD Z,KIP      POSITION, FT      EQ. DIAM, FT
              1.79916            3.35667           -1.55556            35.1141


       THE GLOBAL STRUCTURAL COORDINATE SYSTEM
       ---------------------------------------

       * PILE TOP DISPLACEMENTS *

      PILE GROUP   DISP. X,IN   DISP. Y,IN   DISP. Z,IN   ROT. X,RAD   ROT. Y,RAD
ROT. Z,RAD
      **********  ***********  ***********  ***********  ***********  ***********
***********
          1            0.1106   1.8703E-03   1.4045E-04   4.2763E-07   1.1329E-04
2.0006E-04
          2            0.1208   1.8318E-03   1.4045E-04   4.2763E-07   1.1329E-04
2.0006E-04
          3            0.1310   1.7933E-03   1.4045E-04   4.2763E-07   1.1329E-04
2.0006E-04
          4            0.1412   1.7548E-03   1.4045E-04   4.2763E-07   1.1329E-04
2.0006E-04
          5            0.1514   1.7163E-03   1.4045E-04   4.2763E-07   1.1329E-04
2.0006E-04
          6          0.098649   1.8703E-03   1.6610E-04   4.2763E-07   1.1329E-04
2.0006E-04
          7            0.1088   1.8318E-03   1.6610E-04   4.2763E-07   1.1329E-04
2.0006E-04
          8            0.1190   1.7933E-03   1.6610E-04   4.2763E-07   1.1329E-04
2.0006E-04
          9            0.1292   1.7548E-03   1.6610E-04   4.2763E-07   1.1329E-04
2.0006E-04
         10            0.1394   1.7163E-03   1.6610E-04   4.2763E-07   1.1329E-04
```

```
2.0006E-04
         11          0.086645   1.8703E-03   1.9176E-04   4.2763E-07   1.1329E-04
2.0006E-04
         12          0.096841   1.8318E-03   1.9176E-04   4.2763E-07   1.1329E-04
2.0006E-04
         13            0.1070   1.7933E-03   1.9176E-04   4.2763E-07   1.1329E-04
2.0006E-04
         14            0.1172   1.7548E-03   1.9176E-04   4.2763E-07   1.1329E-04
2.0006E-04
         15            0.1274   1.7163E-03   1.9176E-04   4.2763E-07   1.1329E-04
2.0006E-04

       MINIMUM       0.086645   1.7163E-03   1.4045E-04   4.2763E-07   1.1329E-04
2.0006E-04
       Pile N.         11            5            1            1            1
    1
       MAXIMUM         0.1514   1.8703E-03   1.9176E-04   4.2763E-07   1.1329E-04
2.0006E-04
       Pile N.          5            1           11            1            1
    1

       * PILE TOP REACTIONS *

      PILE GROUP   FOR. X,KIP   FOR. Y,KIP   FOR. Z,KIP MOM X,KIP-IN MOM Y,KIP-IN
MOM Z,KIP-IN
      **********  ***********  ***********  ***********  ***********  ***********
***********
          1            135.58      -9.2760      -0.9158       6.0379       41.020
   491.86
          2            146.94      -10.784      -0.8917       5.9549       40.522
   510.64
          3            158.30      -12.344      -0.8704       5.8731       40.031
   523.92
          4            169.81      -12.999      -0.8920       5.9564       40.531
   556.79
          5            181.19      -14.418      -0.8785       5.9056       40.226
   574.04
          6            122.14       4.9081      -2.7613     0.019159       129.97
   130.41
          7            133.02       4.8886      -2.7682     0.019159       130.06
   130.00
          8            143.91       4.8690      -2.7752     0.019159       130.16
   129.59
          9            154.79       5.1410      -2.9370     0.019159       133.88
   133.57
         10            165.67       5.1597      -2.9661     0.019159       134.49
   133.74
         11            108.57       11.910      -1.3345      -7.7462       51.494
  -56.184
         12            119.98       13.122      -1.2469      -7.4358       49.631
```

```
  -81.511
        13            131.38       14.402      -1.1759      -7.1783       48.086
  -105.10
        14            142.88       15.051      -1.1708      -7.1524       47.931
  -139.58
        15            154.28       16.287      -1.1259      -6.9832       46.915
  -163.41

      MINIMUM         108.57      -14.418      -2.9661      -7.7462       40.031
  -163.41
      Pile N.         11            5           10           11            3
   15
      MAXIMUM         181.19       16.287      -0.8704       6.0379       134.49
   574.04
      Pile N.          5           15            3            1           10
    5


      THE PILE COORDINATE SYSTEM (LOCAL AXES)
      ---------------------------------------

      * PILE TOP DISPLACEMENTS *

     PILE GROUP   DISP. x,IN   DISP. y,IN   DISP. z,IN   ROT. x,RAD   ROT. y,RAD
ROT. z,RAD
     **********  ***********  ***********  ***********  ***********  ***********
***********
          1            0.1088     0.020032   1.4045E-04  -1.8199E-05   1.1182E-04
2.0006E-04
          2            0.1189     0.021669   1.4045E-04  -1.8199E-05   1.1182E-04
2.0006E-04
          3            0.1290     0.023307   1.4045E-04  -1.8199E-05   1.1182E-04
2.0006E-04
          4            0.1390     0.024945   1.4045E-04  -1.8199E-05   1.1182E-04
2.0006E-04
          5            0.1491     0.026583   1.4045E-04  -1.8199E-05   1.1182E-04
2.0006E-04
          6          0.098649   1.6610E-04  -1.8703E-03   4.2763E-07   2.0006E-04
-1.1329E-04
          7            0.1088   1.6610E-04  -1.8318E-03   4.2763E-07   2.0006E-04
-1.1329E-04
          8            0.1190   1.6610E-04  -1.7933E-03   4.2763E-07   2.0006E-04
-1.1329E-04
          9            0.1292   1.6610E-04  -1.7548E-03   4.2763E-07   2.0006E-04
-1.1329E-04
         10            0.1394   1.6610E-04  -1.7163E-03   4.2763E-07   2.0006E-04
-1.1329E-04
         11          0.085774    -0.012396   1.9176E-04   1.9043E-05   1.1168E-04
2.0006E-04
         12          0.095826    -0.014110   1.9176E-04   1.9043E-05   1.1168E-04
```

```
2.0006E-04
         13            0.1059    -0.015824   1.9176E-04   1.9043E-05   1.1168E-04
2.0006E-04
         14            0.1159    -0.017538   1.9176E-04   1.9043E-05   1.1168E-04
2.0006E-04
         15            0.1260    -0.019251   1.9176E-04   1.9043E-05   1.1168E-04
2.0006E-04

       MINIMUM       0.085774    -0.019251  -1.8703E-03  -1.8199E-05   1.1168E-04
-1.1329E-04
       Pile N.         11           15            6            1           11
    6
       MAXIMUM         0.1491     0.026583   1.9176E-04   1.9043E-05   2.0006E-04
2.0006E-04
       Pile N.          5            5           11           11            6
    1

       * PILE TOP REACTIONS *

      PILE GROUP   AXIAL,KIP    LAT. y,KIP   LAT. z,KIP MOM x,KIP-IN MOM y,KIP-IN
MOM z,KIP-IN
      **********  ***********  ***********  ***********  ***********  ***********
***********
          1            135.26       13.134      -0.9158      -0.7863       41.455
   491.86
          2            146.72       13.515      -0.8917      -0.7863       40.949
   510.64
          3            158.18       13.842      -0.8704      -0.7863       40.452
   523.92
          4            169.64       15.088      -0.8920      -0.7863       40.959
   556.79
          5            181.10       15.558      -0.8785      -0.7863       40.650
   574.04
          6            122.14      -2.7613      -4.9081     0.019159       130.41
  -129.97
          7            133.02      -2.7682      -4.8886     0.019159       130.00
  -130.06
          8            143.91      -2.7752      -4.8690     0.019159       129.59
  -130.16
          9            154.79      -2.9370      -5.1410     0.019159       133.57
  -133.88
         10            165.67      -2.9661      -5.1597     0.019159       133.74
  -134.49
         11            109.05      -6.0972      -1.3345       0.8227       52.067
  -56.184
         12            120.51      -6.7763      -1.2469       0.8227       50.178
  -81.511
         13            131.96      -7.3865      -1.1759       0.8227       48.612
  -105.10
         14            143.41      -8.6367      -1.1708       0.8227       48.454
```

```
  -139.58
        15            154.86      -9.2916      -1.1259       0.8227       47.425
  -163.41

      MINIMUM         109.05      -9.2916      -5.1597      -0.7863       40.452
  -163.41
      Pile N.         11           15           10            1            3
   15
      MAXIMUM         181.10       15.558      -0.8704       0.8227       133.74
   574.04
      Pile N.          5            5            3           11           10
    5

     PILE GROUP   STRESS,KIP/IN**2
     **********  ****************
         1            7.9332
         2            8.4468
         3            8.9282
         4            9.5318
         5            10.038
         6            7.1921
         7            7.5689
         8            7.9456
         9            8.4179
        10            8.8072
        11            5.0115
        12            5.4360
        13            5.8817
        14            6.4090
        15            6.8970

      MINIMUM         5.0115
      Pile N.         11
      MAXIMUM         10.038
      Pile N.          5

      * EFFECTS FOR LATERALLY LOADED PILE *

      * MINIMUM VALUES AND LOCATIONS *

     PILE     DISPL.      DISPL.      MOMENT      MOMENT       SHEAR       SHEAR
SOIL REACT  SOIL REACT     TOTAL    FLEX. RIG.  FLEX. RIG.
               y-DIR       z-DIR       z-DIR       y-DIR       y-DIR       z-DIR
  y-DIR       z-DIR      STRESS       z-DIR       y-DIR
                IN          IN        KIP-IN      KIP-IN        KIP         KIP
 KIP/IN      KIP/IN     KIP/IN**2   KIP-IN**2   KIP-IN**2
    ******  **********  **********  **********  **********  **********  **********
**********  **********  **********  **********  **********
        1  -7.5670E-04 -1.6746E-03     -491.86     -2.9541     -0.9850     -0.9219
-0.010720   -0.021125      4.7838  3.1594E+07  9.1843E+06
```

```
     x(FT)      17.480      3.8000      0.0000      11.400      13.680      0.0000
   18.240      3.0400      63.080      0.0000      0.0000
        2  -1.0307E-03 -1.6950E-03     -510.64     -3.1548     -1.2518     -0.8979
-0.013195   -0.020362      5.1891  3.1594E+07  9.1843E+06
     x(FT)      16.720      3.8000      0.0000      11.400      13.680      0.0000
   17.480      3.0400      63.080      0.0000      0.0000
        3  -9.8000E-04 -1.7184E-03     -523.92     -3.1367     -1.1873     -0.8767
-0.012483   -0.019697      5.5944  3.1594E+07  9.1843E+06
     x(FT)      16.720      3.8000      0.0000      11.400      13.680      0.0000
   18.240      3.0400      63.080      0.0000      0.0000
        4  -9.1370E-04 -1.6927E-03     -556.79     -3.0320     -1.1546     -0.8987
-0.012406   -0.020354      5.9996  3.1594E+07  9.1843E+06
     x(FT)      17.480      3.8000      0.0000      11.400      13.680      0.0000
   18.240      3.0400      63.080      0.0000      0.0000
        5  -9.3265E-04 -1.7064E-03     -574.04     -3.0469     -1.1604     -0.8853
-0.012488   -0.019925      6.4049  3.1594E+07  9.1843E+06
     x(FT)      17.480      3.8000      0.0000      11.400      13.680      0.0000
   19.000      3.0400      63.080      0.0000      0.0000
        6  -1.9408E-03 -3.5534E-03     -8.4730     -6.3665     -2.7722     -4.8191
-0.059175     -0.1263      4.3199  3.1594E+07  9.1843E+06
     x(FT)      3.8000      1.5200      12.160      7.6000      0.0000      0.0000
   2.2800      2.2800      56.240      0.0000      0.0000
        7  -1.9398E-03 -3.5208E-03     -8.4701     -6.3119     -2.7793     -4.8023
-0.059397     -0.1258      4.7048  3.1594E+07  9.1843E+06
     x(FT)      3.8000      1.5200      12.160      7.6000      0.0000      0.0000
   2.2800      2.2800      56.240      0.0000      0.0000
        8  -1.9388E-03 -3.4881E-03     -8.4672     -6.2573     -2.7866     -4.7853
-0.059620     -0.1253      5.0897  3.1594E+07  9.1843E+06
     x(FT)      3.8000      1.5200      12.160      7.6000      0.0000      0.0000
   2.2800      2.2800      56.240      0.0000      0.0000
        9  -1.8840E-03 -3.3992E-03     -8.4215     -6.3976     -2.9495     -5.0516
-0.064496     -0.1332      5.4746  3.1594E+07  9.1843E+06
     x(FT)      3.8000      1.5200      12.160      7.6000      0.0000      0.0000
   2.2800      2.2800      55.480      0.0000      0.0000
       10  -1.8756E-03 -3.3593E-03     -8.4087     -6.3650     -2.9789     -5.0720
-0.065387     -0.1338      5.8595  3.1594E+07  9.1843E+06
     x(FT)      3.8000      1.5200      12.160      7.6000      0.0000      0.0000
   2.2800      2.2800      55.480      0.0000      0.0000
       11    -0.012396 -1.1757E-03     -84.051     -2.5653     -5.7641     -1.3425
  -0.1531   -0.034899      3.8570  3.1594E+07  9.1843E+06
     x(FT)      0.0000      2.2800      3.8000      7.6000      0.0000      0.0000
   3.0400      3.0400      60.040      0.0000      0.0000
       12    -0.014110 -1.2397E-03     -82.772     -2.7193     -6.4177     -1.2548
  -0.1655   -0.031691      4.2620  3.1594E+07  9.1843E+06
     x(FT)      0.0000      3.0400      4.5600      8.3600      0.0000      0.0000
   3.0400      3.0400      60.040      0.0000      0.0000
       13    -0.015824 -1.2964E-03     -82.769     -2.8661     -7.0036     -1.1838
  -0.1762   -0.029187      4.6670  3.1594E+07  9.1843E+06
     x(FT)      0.0000      3.0400      4.5600      8.3600      0.0000      0.0000
   3.0400      3.0400      60.800      0.0000      0.0000
```

```
      14    -0.017538 -1.3027E-03     -85.963     -3.0157     -8.1892     -1.1792
  -0.2020   -0.028990      5.0720  3.1594E+07  9.1843E+06
     x(FT)      0.0000      3.0400      4.5600      8.3600      0.0000      0.0000
   3.0400      3.0400      60.040      0.0000      0.0000
      15    -0.019251 -1.3412E-03     -86.021     -3.0911     -8.8136     -1.1344
  -0.2138   -0.027485      5.4770  3.1594E+07  9.1843E+06
     x(FT)      0.0000      3.0400      5.3200      8.3600      0.0000      0.0000
   3.0400      3.0400      60.800      0.0000      0.0000

     Min.    -0.019251 -3.5534E-03     -574.04     -6.3976     -8.8136     -5.0720
  -0.2138     -0.1338      3.8570  3.1594E+07  9.1843E+06
   Pile N.      15           6           5           9          15          10
   15          10          11           1           1

      * MAXIMUM VALUES AND LOCATIONS *

     PILE     DISPL.      DISPL.      MOMENT      MOMENT       SHEAR       SHEAR
SOIL REACT  SOIL REACT     TOTAL    FLEX. RIG.  FLEX. RIG.
               y-DIR       z-DIR       z-DIR       y-DIR       y-DIR       z-DIR
  y-DIR       z-DIR      STRESS       z-DIR       y-DIR
               IN          IN        KIP-IN      KIP-IN        KIP         KIP
 KIP/IN      KIP/IN     KIP/IN**2   KIP-IN**2   KIP-IN**2
    ******  **********  **********  **********  **********  **********  **********
**********  **********  **********  **********  **********
        1     0.021394  1.4044E-04      74.029      41.455      12.673    0.055219
   0.2521  8.2238E-04      7.9332  3.1594E+07  9.1843E+06
     x(FT)      1.5200      0.0000      12.160      0.0000      0.0000      12.920
   3.0400      15.200      0.0000      0.0000      0.0000
        2     0.022942  1.4044E-04      87.311      40.949      13.033    0.065861
   0.2566  9.6757E-04      8.4468  3.1594E+07  9.1843E+06
     x(FT)      1.5200      0.0000      12.160      0.0000      0.0000      12.920
   3.0400      15.200      0.0000      0.0000      0.0000
        3     0.024517  1.4044E-04      87.487      40.452      13.341    0.060790
   0.2621  8.7534E-04      8.9282  3.1594E+07  9.1843E+06
     x(FT)      1.5200      0.0000      12.160      0.0000      0.0000      12.920
   3.0400      15.200      0.0000      0.0000      0.0000
        4     0.026037  1.4044E-04      88.592      40.959      14.519    0.055635
   0.2888  8.0747E-04      9.5318  3.1594E+07  9.1843E+06
     x(FT)      0.7600      0.0000      11.400      0.0000      0.0000      12.920
   3.0400      15.960      0.0000      0.0000      0.0000
        5     0.027652  1.4044E-04      92.215      40.650      14.962    0.053886
   0.2970  7.8156E-04      10.038  3.1594E+07  9.1843E+06
     x(FT)      0.7600      0.0000      11.400      0.0000      0.0000      12.920
   3.0400      15.960      0.0000      0.0000      0.0000
        6   1.6610E-04  6.8406E-05      129.97      130.41      0.1252    0.099066
2.1197E-03  1.8898E-03      7.1921  3.1594E+07  9.1843E+06
     x(FT)      0.0000      13.680      0.0000      0.0000      15.960      11.400
   18.240      14.440      0.0000      0.0000      0.0000
        7   1.6610E-04  6.7869E-05      130.06      130.00      0.1252    0.098449
2.1197E-03  1.8799E-03      7.5689  3.1594E+07  9.1843E+06
```

```
     x(FT)      0.0000      13.680      0.0000      0.0000      15.960      11.400
   18.240      14.440      0.0000      0.0000      0.0000
        8   1.6610E-04  6.7331E-05      130.16      129.59      0.1252    0.097831
2.1197E-03  1.8701E-03      7.9456  3.1594E+07  9.1843E+06
     x(FT)      0.0000      13.680      0.0000      0.0000      15.960      11.400
   18.240      14.440      0.0000      0.0000      0.0000
        9   1.6610E-04  7.0093E-05      133.88      133.57      0.1249    0.099862
2.1909E-03  1.8951E-03      8.4179  3.1594E+07  9.1843E+06
     x(FT)      0.0000      12.920      0.0000      0.0000      15.960      10.640
   18.240      14.440      0.0000      0.0000      0.0000
       10   1.6610E-04  6.9781E-05      134.49      133.74      0.1248    0.099733
2.1973E-03  1.8872E-03      8.8072  3.1594E+07  9.1843E+06
     x(FT)      0.0000      12.920      0.0000      0.0000      15.960      10.640
   18.240      14.440      0.0000      0.0000      0.0000
       11   9.9257E-04  1.9176E-04      56.184      52.067      0.9340    0.037267
8.8565E-03  1.1329E-03      5.0115  3.1594E+07  9.1843E+06
     x(FT)      10.640      0.0000      0.0000      0.0000      6.8400      10.640
   11.400      0.0000      0.0000      0.0000      0.0000
       12   9.4515E-04  1.9176E-04      81.511      50.178      0.8961    0.039298
8.5416E-03  1.0731E-03      5.4360  3.1594E+07  9.1843E+06
     x(FT)      11.400      0.0000      0.0000      0.0000      7.6000      10.640
   12.160      0.0000      0.0000      0.0000      0.0000
       13   9.2731E-04  1.9176E-04      105.10      48.612      0.8833    0.041471
8.4336E-03  1.0229E-03      5.8817  3.1594E+07  9.1843E+06
     x(FT)      12.160      0.0000      0.0000      0.0000      8.3600      11.400
   12.920      0.0000      0.0000      0.0000      0.0000
       14   9.3068E-04  1.9176E-04      139.58      48.454      0.9380    0.044627
9.1803E-03  1.0799E-03      6.4090  3.1594E+07  9.1843E+06
     x(FT)      12.160      0.0000      0.0000      0.0000      9.1200      10.640
   13.680      0.0000      0.0000      0.0000      0.0000
       15   9.4973E-04  1.9176E-04      163.41      47.425      0.9587    0.046047
9.3994E-03  1.0521E-03      6.8970  3.1594E+07  9.1843E+06
     x(FT)      12.920      0.0000      0.0000      0.0000      9.1200      11.400
   13.680      0.0000      0.0000      0.0000      0.0000

      Max.    0.027652  1.9176E-04      163.41      133.74      14.962    0.099862
   0.2970  1.8951E-03      10.038  3.1594E+07  9.1843E+06
   Pile N.       5          11          15          10           5           9
    5           9           5           1           1


     LOAD CASE :     3
     CASE NAME : STR I Max-L1

     LOAD TYPE : Dead, DL

       REDUCTION FACTORS FOR CLOSELY-SPACED PILE GROUPS, COMBINED Y AND Z DIRECTIONS
       ESTIMATED USING MOVEMENT IN THE DIRECTION OF PILE CAP DISPLACEMENTS
```

GROUP NO	P-FACTOR	Y-FACTOR
1	0.8730	1.0000
2	0.8730	1.0000
3	0.8730	1.0000
4	0.9728	1.0000
5	0.9868	1.0000
6	0.8728	1.0000
7	0.8728	1.0000
8	0.8728	1.0000
9	0.9727	1.0000
10	0.9867	1.0000
11	0.8726	1.0000
12	0.8726	1.0000
13	0.8726	1.0000
14	0.9725	1.0000
15	0.9865	1.0000

* TABLE L * COMPUTATION ON PILE CAP

* EQUIVALENT CONCENTRATED LOAD AT ORIGIN *

VERT. LOAD,KIPS	HOR. LOAD Y,KIPS	HOR. LOAD Z,KIPS
2665.02	30.9100	0.00000

MOMENT X ,KIP-IN	MOMENT Y,KIP-IN	MOMENT Z,KIP-IN
0.00000	50386.2	8261.37

* DISPLACEMENT OF GROUPED PILE FOUNDATION AT ORIGIN *

VERTICAL ,IN	HORIZONTAL Y,IN	HORIZONTAL Z,IN
0.14911	1.32410E-03	3.06726E-03

ANGLE ROT. X,RAD	ANGLE ROT. Y,RAD	ANGLE ROT. Z,RAD
9.33146E-08	1.83390E-04	1.54991E-04

* PASSIVE RESISTANCE IN PILE CAP *

HOR. LOAD Y,KIP	HOR. LOAD Z,KIP	POSITION, FT	EQ. DIAM, FT
0.25230	6.53296	-1.55556	35.1141

THE GLOBAL STRUCTURAL COORDINATE SYSTEM

```
      ---------------------------------------

      * PILE TOP DISPLACEMENTS *

     PILE GROUP   DISP. X,IN   DISP. Y,IN   DISP. Z,IN   ROT. X,RAD   ROT. Y,RAD
ROT. Z,RAD
     **********  ***********  ***********  ***********  ***********  ***********
***********
         1            0.1254   1.3409E-03   3.0617E-03   9.3315E-08   1.8339E-04
1.5499E-04
         2            0.1419   1.3325E-03   3.0617E-03   9.3315E-08   1.8339E-04
1.5499E-04
         3            0.1584   1.3241E-03   3.0617E-03   9.3315E-08   1.8339E-04
1.5499E-04
         4            0.1749   1.3157E-03   3.0617E-03   9.3315E-08   1.8339E-04
1.5499E-04
         5            0.1914   1.3073E-03   3.0617E-03   9.3315E-08   1.8339E-04
1.5499E-04
         6            0.1161   1.3409E-03   3.0673E-03   9.3315E-08   1.8339E-04
1.5499E-04
         7            0.1326   1.3325E-03   3.0673E-03   9.3315E-08   1.8339E-04
1.5499E-04
         8            0.1491   1.3241E-03   3.0673E-03   9.3315E-08   1.8339E-04
1.5499E-04
         9            0.1656   1.3157E-03   3.0673E-03   9.3315E-08   1.8339E-04
1.5499E-04
        10            0.1821   1.3073E-03   3.0673E-03   9.3315E-08   1.8339E-04
1.5499E-04
        11            0.1068   1.3409E-03   3.0728E-03   9.3315E-08   1.8339E-04
1.5499E-04
        12            0.1233   1.3325E-03   3.0728E-03   9.3315E-08   1.8339E-04
1.5499E-04
        13            0.1398   1.3241E-03   3.0728E-03   9.3315E-08   1.8339E-04
1.5499E-04
        14            0.1563   1.3157E-03   3.0728E-03   9.3315E-08   1.8339E-04
1.5499E-04
        15            0.1728   1.3073E-03   3.0728E-03   9.3315E-08   1.8339E-04
1.5499E-04

      MINIMUM         0.1068   1.3073E-03   3.0617E-03   9.3315E-08   1.8339E-04
1.5499E-04
      Pile N.         11            5            1            1            1
   1
      MAXIMUM         0.1914   1.3409E-03   3.0728E-03   9.3315E-08   1.8339E-04
1.5499E-04
      Pile N.          5            1           11            1            1
   1

      * PILE TOP REACTIONS *
```

```
      PILE GROUP   FOR. X,KIP   FOR. Y,KIP   FOR. Z,KIP MOM X,KIP-IN MOM Y,KIP-IN
MOM Z,KIP-IN
      **********  ***********  ***********  ***********  ***********  ***********
***********
          1            152.02      -11.983      -0.3918       5.7078       42.154
   474.37
          2            170.40      -14.470      -0.3950       5.6530       41.825
   499.29
          3            188.78      -16.982      -0.3970       5.6023       41.521
   523.78
          4            207.36      -18.292      -0.3967       5.6468       41.788
   574.83
          5            225.76      -20.631      -0.3979       5.6148       41.596
   603.45
          6            140.77       4.2797      -1.0890   4.1808E-03       138.94
   108.75
          7            158.39       4.2742      -1.0887   4.1808E-03       138.90
   108.63
          8            176.01       4.2686      -1.0885   4.1808E-03       138.85
   108.51
          9            193.62       4.5559      -1.0590   4.1808E-03       140.82
   112.70
         10            211.24       4.5895      -1.0540   4.1808E-03       141.04
   113.15
         11            131.22       13.227      -0.4367      -6.3418       46.008
  -158.50
         12            149.65       15.448      -0.4397      -6.2242       45.302
  -191.93
         13            168.07       17.747      -0.4405      -6.1210       44.682
  -223.25
         14            186.64       19.117      -0.4336      -6.1126       44.632
  -272.24
         15            205.07       21.327      -0.4333      -6.0432       44.215
  -304.86

      MINIMUM          131.22      -20.631      -1.0890      -6.3418       41.521
  -304.86
      Pile N.          11            5            6           11            3
   15
      MAXIMUM          225.76       21.327      -0.3918       5.7078       141.04
   603.45
      Pile N.           5           15            1            1           10
    5


      THE PILE COORDINATE SYSTEM (LOCAL AXES)
      ---------------------------------------

      * PILE TOP DISPLACEMENTS *
```

```
      PILE GROUP   DISP. x,IN   DISP. y,IN   DISP. z,IN   ROT. x,RAD   ROT. y,RAD
ROT. z,RAD
      **********  ***********  ***********  ***********  ***********  ***********
***********
          1            0.1235     0.021934   3.0617E-03  -3.0050E-05   1.8091E-04
1.5499E-04
          2            0.1398     0.024638   3.0617E-03  -3.0050E-05   1.8091E-04
1.5499E-04
          3            0.1560     0.027343   3.0617E-03  -3.0050E-05   1.8091E-04
1.5499E-04
          4            0.1723     0.030047   3.0617E-03  -3.0050E-05   1.8091E-04
1.5499E-04
          5            0.1886     0.032752   3.0617E-03  -3.0050E-05   1.8091E-04
1.5499E-04
          6            0.1161   3.0673E-03  -1.3409E-03   9.3315E-08   1.5499E-04
-1.8339E-04
          7            0.1326   3.0673E-03  -1.3325E-03   9.3315E-08   1.5499E-04
-1.8339E-04
          8            0.1491   3.0673E-03  -1.3241E-03   9.3315E-08   1.5499E-04
-1.8339E-04
          9            0.1656   3.0673E-03  -1.3157E-03   9.3315E-08   1.5499E-04
-1.8339E-04
         10            0.1821   3.0673E-03  -1.3073E-03   9.3315E-08   1.5499E-04
-1.8339E-04
         11            0.1056    -0.016232   3.0728E-03   3.0234E-05   1.8088E-04
1.5499E-04
         12            0.1218    -0.018953   3.0728E-03   3.0234E-05   1.8088E-04
1.5499E-04
         13            0.1381    -0.021674   3.0728E-03   3.0234E-05   1.8088E-04
1.5499E-04
         14            0.1544    -0.024395   3.0728E-03   3.0234E-05   1.8088E-04
1.5499E-04
         15            0.1707    -0.027116   3.0728E-03   3.0234E-05   1.8088E-04
1.5499E-04

       MINIMUM         0.1056    -0.027116  -1.3409E-03  -3.0050E-05   1.5499E-04
-1.8339E-04
       Pile N.         11           15            6            1            6
    6
       MAXIMUM         0.1886     0.032752   3.0728E-03   3.0234E-05   1.8091E-04
1.5499E-04
       Pile N.          5            5           11           11            1
    1

       * PILE TOP REACTIONS *

      PILE GROUP   AXIAL,KIP    LAT. y,KIP   LAT. z,KIP MOM x,KIP-IN MOM y,KIP-IN
MOM z,KIP-IN
      **********  ***********  ***********  ***********  ***********  ***********
***********
```

```
       1            151.93       13.167      -0.3918      -1.2982       42.519
 474.37
       2            170.46       13.734      -0.3950      -1.2982       42.185
 499.29
       3            189.00       14.276      -0.3970      -1.2982       41.877
 523.78
       4            207.54       16.037      -0.3967      -1.2982       42.148
 574.83
       5            226.08       16.755      -0.3979      -1.2982       41.953
 603.45
       6            140.77      -1.0890      -4.2797   4.1808E-03       108.75
-138.94
       7            158.39      -1.0887      -4.2742   4.1808E-03       108.63
-138.90
       8            176.01      -1.0885      -4.2686   4.1808E-03       108.51
-138.85
       9            193.62      -1.0590      -4.5559   4.1808E-03       112.70
-140.82
      10            211.24      -1.0540      -4.5895   4.1808E-03       113.15
-141.04
      11            131.61      -8.5196      -0.4367       1.3062       46.424
-158.50
      12            150.15      -9.3589      -0.4397       1.3062       45.708
-191.93
      13            168.70      -10.118      -0.4405       1.3062       45.081
-223.25
      14            187.25      -11.819      -0.4336       1.3062       45.029
-272.24
      15            205.79      -12.669      -0.4333       1.3062       44.607
-304.86

    MINIMUM         131.61      -12.669      -4.5895      -1.2982       41.877
-304.86
    Pile N.          11           15           10            1            3
 15
    MAXIMUM         226.08       16.755      -0.3918       1.3062       113.15
 603.45
    Pile N.           5            5            1           11           10
  5

   PILE GROUP   STRESS,KIP/IN**2
   **********  ****************
       1            8.4261
       2            9.2266
       3            10.025
       4            10.986
       5            11.812
       6            7.4331
       7            8.0536
       8            8.6742
```

```
          9            9.3846
         10            10.017
         11            6.0385
         12            6.8365
         13            7.6382
         14            8.5487
         15            9.3773

       MINIMUM         6.0385
       Pile N.         11
       MAXIMUM         11.812
       Pile N.          5

       * EFFECTS FOR LATERALLY LOADED PILE *

       * MINIMUM VALUES AND LOCATIONS *

     PILE     DISPL.      DISPL.      MOMENT      MOMENT       SHEAR       SHEAR
SOIL REACT  SOIL REACT     TOTAL    FLEX. RIG.  FLEX. RIG.
               y-DIR       z-DIR       z-DIR       y-DIR       y-DIR       z-DIR
  y-DIR       z-DIR      STRESS       z-DIR       y-DIR
                IN          IN        KIP-IN      KIP-IN        KIP         KIP
 KIP/IN      KIP/IN     KIP/IN**2   KIP-IN**2   KIP-IN**2
    ******  **********  **********  **********  **********  **********  **********
**********  **********  **********  **********  **********
        1  -7.1453E-04 -1.4635E-03     -474.37     -3.2995     -0.9129     -0.6102
-9.9586E-03   -0.010815      5.3733  3.1594E+07  9.1843E+06
     x(FT)      17.480      5.3200      0.0000      12.160      13.680      2.2800
   19.000      3.0400      63.080      0.0000      0.0000
        2  -8.0228E-04 -1.4954E-03     -499.29     -3.3498     -0.9837     -0.5972
-0.010610   -0.010254      6.0289  3.1594E+07  9.1843E+06
     x(FT)      17.480      5.3200      0.0000      11.400      14.440      2.2800
   19.000      3.0400      63.080      0.0000      0.0000
        3  -8.9936E-04 -1.5236E-03     -523.78     -3.4321     -1.0616     -0.5858
-0.011295 -9.7620E-03      6.6846  3.1594E+07  9.1843E+06
     x(FT)      17.480      5.3200      0.0000      11.400      14.440      2.2800
   19.000      3.0400      63.080      0.0000      0.0000
        4  -1.0019E-03 -1.4882E-03     -574.83     -3.5165     -1.2061     -0.5962
-0.012802   -0.010035      7.3403  3.1594E+07  9.1843E+06
     x(FT)      17.480      5.3200      0.0000      11.400      13.680      2.2800
   19.000      3.0400      63.080      0.0000      0.0000
        5  -1.1160E-03 -1.5039E-03     -603.45     -3.6058     -1.3070     -0.5893
-0.013740 -9.7205E-03      7.9960  3.1594E+07  9.1843E+06
     x(FT)      17.480      5.3200      0.0000      11.400      13.680      2.2800
   19.000      3.0400      63.080      0.0000      0.0000
        6  -1.8758E-03 -2.5450E-03     -8.5306     -4.7276     -1.9399     -4.2206
-0.035325     -0.1203      4.9788  3.1594E+07  9.1843E+06
     x(FT)      6.0800      1.5200      13.680      6.8400      1.5200      0.0000
   4.5600      2.2800      57.760      0.0000      0.0000
        7  -1.8765E-03 -2.5382E-03     -8.5356     -4.7158     -1.9409     -4.2163
```

```
-0.035345     -0.1202      5.6018  3.1594E+07  9.1843E+06
     x(FT)      6.0800      1.5200      13.680      6.8400      1.5200      0.0000
   4.5600      2.2800      57.760      0.0000      0.0000
        8  -1.8772E-03 -2.5314E-03     -8.5407     -4.7039     -1.9418     -4.2121
-0.035366     -0.1200      6.2249  3.1594E+07  9.1843E+06
     x(FT)      6.0800      1.5200      13.680      6.8400      1.5200      0.0000
   4.5600      2.2800      57.760      0.0000      0.0000
        9  -1.7907E-03 -2.4701E-03     -8.4482     -4.9804     -2.0151     -4.4936
-0.037916     -0.1288      6.8479  3.1594E+07  9.1843E+06
     x(FT)      6.0800      1.5200      13.680      6.8400      1.5200      0.0000
   4.5600      2.2800      57.000      0.0000      0.0000
       10  -1.7799E-03 -2.4562E-03     -8.4365     -5.0027     -2.0266     -4.5277
-0.038281     -0.1299      7.4710  3.1594E+07  9.1843E+06
     x(FT)      6.0800      1.5200      13.680      6.8400      2.2800      0.0000
   4.5600      2.2800      57.000      0.0000      0.0000
       11    -0.016232 -1.0342E-03     -71.111     -2.2520     -8.1085     -0.7468
  -0.1969   -0.013891      4.6547  3.1594E+07  9.1843E+06
     x(FT)      0.0000      5.3200      5.3200      10.640      0.0000      2.2800
   3.0400      3.0400      60.800      0.0000      0.0000
       12    -0.018953 -1.1028E-03     -73.235     -2.4047     -8.9090     -0.7143
  -0.2110   -0.012728      5.3106  3.1594E+07  9.1843E+06
     x(FT)      0.0000      5.3200      6.0800      10.640      0.0000      2.2800
   3.0400      3.0400      60.800      0.0000      0.0000
       13    -0.021674 -1.1633E-03     -77.033     -2.5296     -9.6319     -0.6880
  -0.2233   -0.011819      5.9665  3.1594E+07  9.1843E+06
     x(FT)      0.0000      5.3200      6.8400      10.640      0.0000      2.2800
   3.0400      3.0400      61.560      0.0000      0.0000
       14    -0.024395 -1.1594E-03     -85.248     -2.6483     -11.240     -0.6879
  -0.2577   -0.011839      6.6224  3.1594E+07  9.1843E+06
     x(FT)      0.0000      5.3200      6.8400      10.640      0.0000      2.2800
   3.0400      3.0400      61.560      0.0000      0.0000
       15    -0.027116 -1.1996E-03     -91.544     -2.7388     -12.044     -0.6718
  -0.2722   -0.011291      7.2783  3.1594E+07  9.1843E+06
     x(FT)      0.0000      5.3200      7.6000      10.640      0.0000      2.2800
   3.0400      3.0400      61.560      0.0000      0.0000

      Min.   -0.027116 -2.5450E-03     -603.45     -5.0027     -12.044     -4.5277
  -0.2722     -0.1299      4.6547  3.1594E+07  9.1843E+06
   Pile N.      15           6           5           10          15          10
   15          10          11           1           1

       * MAXIMUM VALUES AND LOCATIONS *

     PILE     DISPL.      DISPL.      MOMENT      MOMENT       SHEAR       SHEAR
SOIL REACT  SOIL REACT     TOTAL    FLEX. RIG.  FLEX. RIG.
               y-DIR       z-DIR       z-DIR       y-DIR       y-DIR       z-DIR
  y-DIR       z-DIR      STRESS       z-DIR       y-DIR
               IN          IN        KIP-IN      KIP-IN        KIP         KIP
 KIP/IN      KIP/IN     KIP/IN**2   KIP-IN**2   KIP-IN**2
    ******  **********  **********  **********  **********  **********  **********
```

```
**********  **********  **********  **********  **********
        1     0.022723  3.0617E-03      73.766      42.519      12.682    0.056043
   0.2556    0.015159      8.4261  3.1594E+07  9.1843E+06
     x(FT)      0.7600      0.0000      11.400      0.0000      0.0000      13.680
   3.0400      0.0000      0.0000      0.0000      0.0000
        2     0.025395  3.0617E-03      81.560      42.185      13.216    0.054953
   0.2640    0.014450      9.2266  3.1594E+07  9.1843E+06
     x(FT)      0.7600      0.0000      11.400      0.0000      0.0000      13.680
   3.0400      0.0000      0.0000      0.0000      0.0000
        3     0.028067  3.0617E-03      89.731      41.877      13.727    0.054665
   0.2717    0.013842      10.025  3.1594E+07  9.1843E+06
     x(FT)      0.7600      0.0000      11.400      0.0000      0.0000      13.680
   3.0400      0.0000      0.0000      0.0000      0.0000
        4     0.030704  3.0617E-03      99.262      42.148      15.391    0.056544
   0.3073    0.014835      10.986  3.1594E+07  9.1843E+06
     x(FT)      0.7600      0.0000      11.400      0.0000      0.0000      13.680
   3.0400      0.0000      0.0000      0.0000      0.0000
        5     0.033371  3.0617E-03      108.18      41.953      16.067    0.057285
   0.3189    0.014520      11.812  3.1594E+07  9.1843E+06
     x(FT)      0.7600      0.0000      11.400      0.0000      0.0000      13.680
   3.0400      0.0000      0.0000      0.0000      0.0000
        6   3.0673E-03  6.5137E-05      138.94      108.75      0.1346    0.068491
 0.066742  1.1165E-03      7.4331  3.1594E+07  9.1843E+06
     x(FT)      0.0000      12.920      0.0000      0.0000      17.480      10.640
   0.7600      14.440      0.0000      0.0000      0.0000
        7   3.0673E-03  6.5160E-05      138.90      108.63      0.1347    0.068482
 0.066854  1.1165E-03      8.0536  3.1594E+07  9.1843E+06
     x(FT)      0.0000      12.920      0.0000      0.0000      17.480      10.640
   0.7600      14.440      0.0000      0.0000      0.0000
        8   3.0673E-03  6.5183E-05      138.85      108.51      0.1349    0.068471
 0.066967  1.1166E-03      8.6742  3.1594E+07  9.1843E+06
     x(FT)      0.0000      12.920      0.0000      0.0000      17.480      10.640
   0.7600      14.440      0.0000      0.0000      0.0000
        9   3.0673E-03  7.0073E-05      140.82      112.70      0.1336    0.072904
 0.074882  1.1853E-03      9.3846  3.1594E+07  9.1843E+06
     x(FT)      0.0000      12.160      0.0000      0.0000      17.480      9.8800
   0.7600      13.680      0.0000      0.0000      0.0000
       10   3.0673E-03  7.0990E-05      141.04      113.15      0.1334    0.073644
 0.076104  1.1952E-03      10.017  3.1594E+07  9.1843E+06
     x(FT)      0.0000      12.160      0.0000      0.0000      17.480      9.8800
   0.7600      13.680      0.0000      0.0000      0.0000
       11   7.0923E-04  3.0729E-03      158.50      46.424      0.7671    0.033968
7.7974E-03    0.018795      6.0385  3.1594E+07  9.1843E+06
     x(FT)      12.920      0.0000      0.0000      0.0000      9.8800      13.680
   14.440      0.7600      0.0000      0.0000      0.0000
       12   7.5490E-04  3.0729E-03      191.93      45.708      0.8016    0.035831
8.1492E-03    0.016579      6.8365  3.1594E+07  9.1843E+06
     x(FT)      13.680      0.0000      0.0000      0.0000      10.640      13.680
   15.200      0.7600      0.0000      0.0000      0.0000
       13   8.1459E-04  3.0729E-03      223.25      45.081      0.8550    0.037300
```

```
8.6155E-03    0.015282      7.6382  3.1594E+07  9.1843E+06
     x(FT)      14.440      0.0000      0.0000      0.0000      10.640      13.680
   15.960      0.0000      0.0000      0.0000      0.0000
       14   8.9790E-04  3.0729E-03      272.24      45.029      0.9701    0.039465
9.9264E-03    0.016223      8.5487  3.1594E+07  9.1843E+06
     x(FT)      14.440      0.0000      0.0000      0.0000      10.640      12.920
   15.960      0.0000      0.0000      0.0000      0.0000
       15   9.7458E-04  3.0729E-03      304.86      44.607      1.0448    0.040540
 0.010611    0.015754      9.3773  3.1594E+07  9.1843E+06
     x(FT)      14.440      0.0000      0.0000      0.0000      11.400      13.680
   15.960      0.0000      0.0000      0.0000      0.0000

      Max.    0.033371  3.0729E-03      304.86      113.15      16.067    0.073644
   0.3189    0.018795      11.812  3.1594E+07  9.1843E+06
   Pile N.       5          11          15          10           5          10
    5          11           5           1           1


     LOAD CASE :     4
     CASE NAME : STR I Max-L2

     LOAD TYPE : Dead, DL

       REDUCTION FACTORS FOR CLOSELY-SPACED PILE GROUPS, COMBINED Y AND Z DIRECTIONS
       ESTIMATED USING MOVEMENT IN THE DIRECTION OF PILE CAP DISPLACEMENTS

            GROUP NO     P-FACTOR     Y-FACTOR

                1          0.8729       1.0000
                2          0.8729       1.0000
                3          0.8729       1.0000
                4          0.9723       1.0000
                5          0.9862       1.0000
                6          0.8721       1.0000
                7          0.8721       1.0000
                8          0.8721       1.0000
                9          0.9716       1.0000
               10          0.9855       1.0000
               11          0.8714       1.0000
               12          0.8714       1.0000
               13          0.8714       1.0000
               14          0.9710       1.0000
               15          0.9849       1.0000


     * TABLE L *   COMPUTATION ON PILE CAP
```

```
* EQUIVALENT CONCENTRATED LOAD AT ORIGIN *

      VERT. LOAD,KIPS    HOR. LOAD Y,KIPS   HOR. LOAD Z,KIPS
            2919.49            30.9100            0.00000

     MOMENT X ,KIP-IN    MOMENT Y,KIP-IN    MOMENT Z,KIP-IN
            0.00000            38171.4            8261.37


* DISPLACEMENT OF GROUPED PILE FOUNDATION AT ORIGIN *

       VERTICAL ,IN      HORIZONTAL Y,IN     HORIZONTAL Z,IN
            0.16455        1.22802E-03        2.05331E-03

     ANGLE ROT. X,RAD    ANGLE ROT. Y,RAD    ANGLE ROT. Z,RAD
        6.02348E-07        1.38358E-04        1.55955E-04


* PASSIVE RESISTANCE IN PILE CAP *

        HOR. LOAD Y,KIP    HOR. LOAD Z,KIP      POSITION, FT      EQ. DIAM, FT
            0.54805            6.77610           -1.55556            35.1141


  THE GLOBAL STRUCTURAL COORDINATE SYSTEM
  ---------------------------------------

  * PILE TOP DISPLACEMENTS *

   PILE GROUP   DISP. X,IN   DISP. Y,IN   DISP. Z,IN   ROT. X,RAD   ROT. Y,RAD
ROT. Z,RAD
   **********  ***********  ***********  ***********  ***********  ***********
***********
         1           0.1490   1.3365E-03   2.0172E-03   6.0235E-07   1.3836E-04
1.5595E-04
         2           0.1615   1.2822E-03   2.0172E-03   6.0235E-07   1.3836E-04
1.5595E-04
         3           0.1739   1.2280E-03   2.0172E-03   6.0235E-07   1.3836E-04
1.5595E-04
         4           0.1864   1.1738E-03   2.0172E-03   6.0235E-07   1.3836E-04
1.5595E-04
         5           0.1988   1.1196E-03   2.0172E-03   6.0235E-07   1.3836E-04
1.5595E-04
         6           0.1396   1.3365E-03   2.0533E-03   6.0235E-07   1.3836E-04
1.5595E-04
         7           0.1521   1.2822E-03   2.0533E-03   6.0235E-07   1.3836E-04
1.5595E-04
         8           0.1646   1.2280E-03   2.0533E-03   6.0235E-07   1.3836E-04
```

```
1.5595E-04
          9            0.1770   1.1738E-03   2.0533E-03   6.0235E-07   1.3836E-04
1.5595E-04
         10            0.1895   1.1196E-03   2.0533E-03   6.0235E-07   1.3836E-04
1.5595E-04
         11            0.1303   1.3365E-03   2.0895E-03   6.0235E-07   1.3836E-04
1.5595E-04
         12            0.1427   1.2822E-03   2.0895E-03   6.0235E-07   1.3836E-04
1.5595E-04
         13            0.1552   1.2280E-03   2.0895E-03   6.0235E-07   1.3836E-04
1.5595E-04
         14            0.1676   1.1738E-03   2.0895E-03   6.0235E-07   1.3836E-04
1.5595E-04
         15            0.1801   1.1196E-03   2.0895E-03   6.0235E-07   1.3836E-04
1.5595E-04

       MINIMUM         0.1303   1.1196E-03   2.0172E-03   6.0235E-07   1.3836E-04
1.5595E-04
       Pile N.         11            5            1            1            1
    1
       MAXIMUM         0.1988   1.3365E-03   2.0895E-03   6.0235E-07   1.3836E-04
1.5595E-04
       Pile N.          5            1           11            1            1
    1

       * PILE TOP REACTIONS *

      PILE GROUP   FOR. X,KIP   FOR. Y,KIP   FOR. Z,KIP MOM X,KIP-IN MOM Y,KIP-IN
MOM Z,KIP-IN
      **********  ***********  ***********  ***********  ***********  ***********
***********
          1            178.31      -15.528      -0.4012       4.6659       33.824
   511.29
          2            192.18      -17.438      -0.3983       4.6284       33.598
   529.43
          3            206.05      -19.358      -0.3955       4.5935       33.389
   547.50
          4            220.12      -20.044      -0.4001       4.6512       33.735
   592.82
          5            234.02      -21.780      -0.3986       4.6315       33.617
   615.18
          6            165.90       4.3742      -1.1823     0.026987       113.77
   110.03
          7            179.19       4.3415      -1.1801     0.026987       113.78
   109.39
          8            192.48       4.3084      -1.1777     0.026987       113.79
   108.74
          9            205.77       4.5666      -1.1808     0.026987       115.78
   112.31
         10            219.06       4.5688      -1.1778     0.026987       116.04
```

```
 112.18
       11            157.44       16.413      -0.4363      -5.0327       36.337
-205.33
       12            171.33       18.149      -0.4303      -4.9563       35.879
-229.16
       13            185.21       19.919      -0.4247      -4.8884       35.471
-252.13
       14            199.26       20.692      -0.4229      -4.9083       35.591
-294.45
       15            213.16       22.330      -0.4190      -4.8619       35.312
-319.79

     MINIMUM         157.44      -21.780      -1.1823      -5.0327       33.389
-319.79
     Pile N.         11            5            6           11            3
 15
     MAXIMUM         234.02       22.330      -0.3955       4.6659       116.04
 615.18
     Pile N.          5           15            3            1           10
  5


     THE PILE COORDINATE SYSTEM (LOCAL AXES)
     ---------------------------------------

     * PILE TOP DISPLACEMENTS *

    PILE GROUP   DISP. x,IN   DISP. y,IN   DISP. z,IN   ROT. x,RAD   ROT. y,RAD
ROT. z,RAD
    **********  ***********  ***********  ***********  ***********  ***********
***********
         1            0.1468     0.025809   2.0172E-03  -2.2146E-05   1.3657E-04
1.5595E-04
         2            0.1590     0.027802   2.0172E-03  -2.2146E-05   1.3657E-04
1.5595E-04
         3            0.1713     0.029795   2.0172E-03  -2.2146E-05   1.3657E-04
1.5595E-04
         4            0.1836     0.031788   2.0172E-03  -2.2146E-05   1.3657E-04
1.5595E-04
         5            0.1959     0.033781   2.0172E-03  -2.2146E-05   1.3657E-04
1.5595E-04
         6            0.1396   2.0533E-03  -1.3365E-03   6.0235E-07   1.5595E-04
-1.3836E-04
         7            0.1521   2.0533E-03  -1.2822E-03   6.0235E-07   1.5595E-04
-1.3836E-04
         8            0.1646   2.0533E-03  -1.2280E-03   6.0235E-07   1.5595E-04
-1.3836E-04
         9            0.1770   2.0533E-03  -1.1738E-03   6.0235E-07   1.5595E-04
-1.3836E-04
        10            0.1895   2.0533E-03  -1.1196E-03   6.0235E-07   1.5595E-04
```

```
-1.3836E-04
         11            0.1287    -0.020096   2.0895E-03   2.3335E-05   1.3638E-04
1.5595E-04
         12            0.1410    -0.022196   2.0895E-03   2.3335E-05   1.3638E-04
1.5595E-04
         13            0.1533    -0.024296   2.0895E-03   2.3335E-05   1.3638E-04
1.5595E-04
         14            0.1656    -0.026396   2.0895E-03   2.3335E-05   1.3638E-04
1.5595E-04
         15            0.1778    -0.028497   2.0895E-03   2.3335E-05   1.3638E-04
1.5595E-04

       MINIMUM         0.1287    -0.028497  -1.3365E-03  -2.2146E-05   1.3638E-04
-1.3836E-04
       Pile N.         11           15            6            1           11
    6
       MAXIMUM         0.1959     0.033781   2.0895E-03   2.3335E-05   1.5595E-04
1.5595E-04
       Pile N.          5            5           11           11            6
    1

       * PILE TOP REACTIONS *

      PILE GROUP   AXIAL,KIP    LAT. y,KIP   LAT. z,KIP MOM x,KIP-IN MOM y,KIP-IN
MOM z,KIP-IN
      **********  ***********  ***********  ***********  ***********  ***********
***********
          1            178.43       13.990      -0.4012      -0.9568       34.131
   511.29
          2            192.43       14.385      -0.3983      -0.9568       33.902
   529.43
          3            206.43       14.771      -0.3955      -0.9568       33.690
   547.50
          4            220.42       16.407      -0.4001      -0.9568       34.041
   592.82
          5            234.42       16.980      -0.3986      -0.9568       33.921
   615.18
          6            165.90      -1.1823      -4.3742     0.026987       110.03
  -113.77
          7            179.19      -1.1801      -4.3415     0.026987       109.39
  -113.78
          8            192.48      -1.1777      -4.3084     0.026987       108.74
  -113.79
          9            205.77      -1.1808      -4.5666     0.026987       112.31
  -115.78
         10            219.06      -1.1778      -4.5688     0.026987       112.18
  -116.04
         11            158.00      -9.6870      -0.4363       1.0081       36.670
  -205.33
         12            171.98      -10.257      -0.4303       1.0081       36.206
```

```
-229.16
       13            185.96      -10.793      -0.4247       1.0081       35.792
-252.13
       14            199.95      -12.339      -0.4229       1.0081       35.913
-294.45
       15            213.93      -13.009      -0.4190       1.0081       35.631
-319.79

     MINIMUM         158.00      -13.009      -4.5688      -0.9568       33.690
-319.79
     Pile N.         11           15           10            1            3
 15
     MAXIMUM         234.42       16.980      -0.3955       1.0081       112.31
 615.18
     Pile N.          5            5            3           11            9
  5

    PILE GROUP   STRESS,KIP/IN**2
    **********  ****************
        1            9.5370
        2            10.140
        3            10.743
        4            11.512
        5            12.142
        6            8.2981
        7            8.7552
        8            9.2123
        9            9.7582
       10            10.226
       11            7.0701
       12            7.6866
       13            8.3027
       14            9.0355
       15            9.6724

     MINIMUM         7.0701
     Pile N.         11
     MAXIMUM         12.142
     Pile N.          5

     * EFFECTS FOR LATERALLY LOADED PILE *

     * MINIMUM VALUES AND LOCATIONS *

    PILE     DISPL.      DISPL.      MOMENT      MOMENT       SHEAR       SHEAR
SOIL REACT  SOIL REACT     TOTAL    FLEX. RIG.  FLEX. RIG.
              y-DIR       z-DIR       z-DIR       y-DIR       y-DIR       z-DIR
  y-DIR       z-DIR      STRESS       z-DIR       y-DIR
              IN          IN        KIP-IN      KIP-IN        KIP         KIP
 KIP/IN      KIP/IN     KIP/IN**2   KIP-IN**2   KIP-IN**2
```

```
    ******  **********  **********  **********  **********  **********  **********
**********  **********  **********  **********  **********
        1  -8.6134E-04 -1.2381E-03     -511.29     -2.7634     -1.0329     -0.5109
-0.011053 -9.7430E-03      6.3108  3.1594E+07  9.1843E+06
     x(FT)      17.480      5.3200      0.0000      11.400      13.680      1.5200
   19.000      3.0400      63.080      0.0000      0.0000
        2  -9.4162E-04 -1.2553E-03     -529.43     -2.8314     -1.0968     -0.5030
-0.011612 -9.3964E-03      6.8058  3.1594E+07  9.1843E+06
     x(FT)      17.480      5.3200      0.0000      11.400      13.680      1.5200
   19.000      3.0400      63.080      0.0000      0.0000
        3  -1.0317E-03 -1.2707E-03     -547.50     -2.9098     -1.1684     -0.4958
-0.012220 -9.0785E-03      7.3008  3.1594E+07  9.1843E+06
     x(FT)      17.480      5.3200      0.0000      11.400      13.680      1.5200
   19.000      3.0400      63.840      0.0000      0.0000
        4  -1.1273E-03 -1.2340E-03     -592.82     -2.9692     -1.3118     -0.5079
-0.013702 -9.4825E-03      7.7958  3.1594E+07  9.1843E+06
     x(FT)      16.720      5.3200      0.0000      11.400      13.680      1.5200
   19.000      3.0400      63.080      0.0000      0.0000
        5  -1.2346E-03 -1.2410E-03     -615.18     -3.0442     -1.4032     -0.5039
-0.014540 -9.2904E-03      8.2908  3.1594E+07  9.1843E+06
     x(FT)      16.720      5.3200      0.0000      11.400      13.680      1.5200
   19.000      3.0400      63.080      0.0000      0.0000
        6  -1.4347E-03 -2.5422E-03     -6.7702     -4.9787     -1.7085     -4.3115
-0.029835     -0.1190      5.8675  3.1594E+07  9.1843E+06
     x(FT)      5.3200      1.5200      13.680      6.8400      1.5200      0.0000
   4.5600      2.2800      57.000      0.0000      0.0000
        7  -1.4339E-03 -2.4970E-03     -6.7685     -4.8852     -1.7122     -4.2824
-0.029907     -0.1182      6.3376  3.1594E+07  9.1843E+06
     x(FT)      5.3200      1.5200      13.680      6.8400      1.5200      0.0000
   4.5600      2.2800      57.000      0.0000      0.0000
        8  -1.4331E-03 -2.4518E-03     -6.7668     -4.7916     -1.7160     -4.2529
-0.029980     -0.1174      6.8077  3.1594E+07  9.1843E+06
     x(FT)      5.3200      1.5200      13.680      6.8400      1.5200      0.0000
   4.5600      2.2800      56.240      0.0000      0.0000
        9  -1.3689E-03 -2.3538E-03     -6.6846     -4.9567     -1.7912     -4.5079
-0.032142     -0.1265      7.2777  3.1594E+07  9.1843E+06
     x(FT)      5.3200      1.5200      12.920      6.8400      1.5200      0.0000
   4.5600      1.5200      56.240      0.0000      0.0000
       10  -1.3597E-03 -2.3023E-03     -6.6742     -4.8909     -1.8048     -4.5131
-0.032500     -0.1271      7.7478  3.1594E+07  9.1843E+06
     x(FT)      5.3200      1.5200      12.920      6.8400      1.5200      0.0000
   4.5600      1.5200      56.240      0.0000      0.0000
       11    -0.020096 -9.0364E-04     -75.140     -2.0513     -9.2211     -0.5870
  -0.2157   -0.011546      5.5881  3.1594E+07  9.1843E+06
     x(FT)      0.0000      4.5600      6.8400      9.8800      0.0000      1.5200
   3.0400      3.0400      60.800      0.0000      0.0000
       12    -0.022196 -9.3964E-04     -78.681     -2.1251     -9.7636     -0.5707
  -0.2249   -0.010914      6.0826  3.1594E+07  9.1843E+06
     x(FT)      0.0000      4.5600      6.8400      9.8800      0.0000      1.5200
   3.0400      3.0400      61.560      0.0000      0.0000
```

```
      13    -0.024296 -9.7149E-04     -82.742     -2.1878     -10.274     -0.5565
  -0.2332   -0.010366      6.5771  3.1594E+07  9.1843E+06
     x(FT)      0.0000      4.5600      7.6000      9.8800      0.0000      1.5200
   3.0400      3.0400      61.560      0.0000      0.0000
      14    -0.026396 -9.5878E-04     -90.603     -2.2790     -11.732     -0.5620
  -0.2652   -0.010616      7.0717  3.1594E+07  9.1843E+06
     x(FT)      0.0000      4.5600      7.6000      9.8800      0.0000      1.5200
   3.0400      3.0400      61.560      0.0000      0.0000
      15    -0.028497 -9.8068E-04     -95.453     -2.3135     -12.366     -0.5529
  -0.2767   -0.010275      7.5662  3.1594E+07  9.1843E+06
     x(FT)      0.0000      4.5600      7.6000      9.8800      0.0000      1.5200
   3.0400      3.0400      61.560      0.0000      0.0000

     Min.    -0.028497 -2.5422E-03     -615.18     -4.9787     -12.366     -4.5131
  -0.2767     -0.1271      5.5881  3.1594E+07  9.1843E+06
   Pile N.      15           6           5           6          15          10
   15          10          11           1           1

      * MAXIMUM VALUES AND LOCATIONS *

     PILE     DISPL.      DISPL.      MOMENT      MOMENT       SHEAR       SHEAR
SOIL REACT  SOIL REACT     TOTAL    FLEX. RIG.  FLEX. RIG.
               y-DIR       z-DIR       z-DIR       y-DIR       y-DIR       z-DIR
  y-DIR       z-DIR      STRESS       z-DIR       y-DIR
               IN          IN        KIP-IN      KIP-IN        KIP         KIP
 KIP/IN      KIP/IN     KIP/IN**2   KIP-IN**2   KIP-IN**2
    ******  **********  **********  **********  **********  **********  **********
**********  **********  **********  **********  **********
        1     0.026558  2.0172E-03      86.012      34.131      13.457    0.045025
   0.2674  9.3549E-03      9.5370  3.1594E+07  9.1843E+06
     x(FT)      0.7600      0.0000      11.400      0.0000      0.0000      13.680
   3.0400      0.0000      0.0000      0.0000      0.0000
        2     0.028527  2.0172E-03      92.452      33.902      13.830    0.045289
   0.2729  9.0697E-03      10.140  3.1594E+07  9.1843E+06
     x(FT)      0.7600      0.0000      11.400      0.0000      0.0000      13.680
   3.0400      0.0000      0.0000      0.0000      0.0000
        3     0.030496  2.0172E-03      99.270      33.690      14.194    0.045909
   0.2781  8.8118E-03      10.743  3.1594E+07  9.1843E+06
     x(FT)      0.7600      0.0000      11.400      0.0000      0.0000      13.680
   3.0400      0.0000      0.0000      0.0000      0.0000
        4     0.032430  2.0172E-03      107.40      34.041      15.739    0.047685
   0.3119  9.5538E-03      11.512  3.1594E+07  9.1843E+06
     x(FT)      0.7600      0.0000      11.400      0.0000      0.0000      13.680
   3.0400      0.0000      0.0000      0.0000      0.0000
        5     0.034394  2.0172E-03      114.79      33.921      16.279    0.048664
   0.3213  9.4479E-03      12.142  3.1594E+07  9.1843E+06
     x(FT)      0.7600      0.0000      11.400      0.0000      0.0000      13.680
   3.0400      0.0000      0.0000      0.0000      0.0000
        6   2.0533E-03  6.4529E-05      113.77      110.03      0.1065    0.074190
 0.043332  1.2521E-03      8.2981  3.1594E+07  9.1843E+06
```

```
     x(FT)      0.0000      12.920      0.0000      0.0000      16.720      10.640
   0.7600      13.680      0.0000      0.0000      0.0000
        7   2.0533E-03  6.3374E-05      113.78      109.39      0.1066    0.073070
 0.043950  1.2335E-03      8.7552  3.1594E+07  9.1843E+06
     x(FT)      0.0000      12.920      0.0000      0.0000      16.720      10.640
   0.7600      13.680      0.0000      0.0000      0.0000
        8   2.0533E-03  6.2213E-05      113.79      108.74      0.1066    0.071947
 0.044587  1.2149E-03      9.2123  3.1594E+07  9.1843E+06
     x(FT)      0.0000      12.920      0.0000      0.0000      16.720      10.640
   0.7600      13.680      0.0000      0.0000      0.0000
        9   2.0533E-03  6.5647E-05      115.78      112.31      0.1067    0.075336
 0.050543  1.2646E-03      9.7582  3.1594E+07  9.1843E+06
     x(FT)      0.0000      12.160      0.0000      0.0000      16.720      9.8800
   0.7600      13.680      0.0000      0.0000      0.0000
       10   2.0533E-03  6.4792E-05      116.04      112.18      0.1066    0.074656
 0.052053  1.2520E-03      10.226  3.1594E+07  9.1843E+06
     x(FT)      0.0000      12.160      0.0000      0.0000      16.720      9.8800
   0.7600      13.680      0.0000      0.0000      0.0000
       11   8.0564E-04  2.0894E-03      205.33      36.670      0.8470    0.030558
8.5314E-03    0.010731      7.0701  3.1594E+07  9.1843E+06
     x(FT)      13.680      0.0000      0.0000      0.0000      10.640      12.920
   15.200      0.0000      0.0000      0.0000      0.0000
       12   8.5842E-04  2.0894E-03      229.16      36.206      0.8907    0.031496
8.9168E-03    0.010298      7.6866  3.1594E+07  9.1843E+06
     x(FT)      14.440      0.0000      0.0000      0.0000      10.640      12.920
   15.960      0.0000      0.0000      0.0000      0.0000
       13   9.1953E-04  2.0894E-03      252.13      35.792      0.9340    0.032264
9.3519E-03  9.9185E-03      8.3027  3.1594E+07  9.1843E+06
     x(FT)      14.440      0.0000      0.0000      0.0000      11.400      12.920
   15.960      0.0000      0.0000      0.0000      0.0000
       14   9.9246E-04  2.0894E-03      294.45      35.913      1.0465    0.034167
 0.010614    0.010677      9.0355  3.1594E+07  9.1843E+06
     x(FT)      14.440      0.0000      0.0000      0.0000      11.400      12.920
   15.960      0.0000      0.0000      0.0000      0.0000
       15   1.0518E-03  2.0894E-03      319.79      35.631      1.1082    0.034690
 0.011150    0.010491      9.6724  3.1594E+07  9.1843E+06
     x(FT)      14.440      0.0000      0.0000      0.0000      11.400      12.920
   15.960      0.0000      0.0000      0.0000      0.0000

      Max.    0.034394  2.0894E-03      319.79      112.31      16.279    0.075336
   0.3213    0.010731      12.142  3.1594E+07  9.1843E+06
   Pile N.       5          11          15           9           5           9
    5          11           5           1           1


     LOAD CASE :     5
     CASE NAME : STR I Min-L1

     LOAD TYPE : Dead, DL
```

REDUCTION FACTORS FOR CLOSELY-SPACED PILE GROUPS, COMBINED Y AND Z DIRECTIONS
ESTIMATED USING MOVEMENT IN THE DIRECTION OF PILE CAP DISPLACEMENTS

GROUP NO	P-FACTOR	Y-FACTOR
1	0.8718	1.0000
2	0.8718	1.0000
3	0.8718	1.0000
4	0.9627	1.0000
5	0.9755	1.0000
6	0.8595	1.0000
7	0.8595	1.0000
8	0.8595	1.0000
9	0.9516	1.0000
10	0.9646	1.0000
11	0.8493	1.0000
12	0.8493	1.0000
13	0.8493	1.0000
14	0.9424	1.0000
15	0.9555	1.0000

* TABLE L * COMPUTATION ON PILE CAP

* EQUIVALENT CONCENTRATED LOAD AT ORIGIN *

VERT. LOAD,KIPS	HOR. LOAD Y,KIPS	HOR. LOAD Z,KIPS
1986.29	30.9100	0.00000
MOMENT X ,KIP-IN	**MOMENT Y,KIP-IN**	**MOMENT Z,KIP-IN**
0.00000	50386.2	8261.37

* DISPLACEMENT OF GROUPED PILE FOUNDATION AT ORIGIN *

VERTICAL ,IN	HORIZONTAL Y,IN	HORIZONTAL Z,IN
0.10797	1.28064E-03	3.57830E-03
ANGLE ROT. X,RAD	**ANGLE ROT. Y,RAD**	**ANGLE ROT. Z,RAD**
-1.30564E-06	1.84109E-04	1.51835E-04

* PASSIVE RESISTANCE IN PILE CAP *

HOR. LOAD Y,KIP	HOR. LOAD Z,KIP	POSITION, FT	EQ. DIAM, FT

```
                1.26473            3.87428           -1.55556            35.1141


       THE GLOBAL STRUCTURAL COORDINATE SYSTEM
       ---------------------------------------

       * PILE TOP DISPLACEMENTS *

      PILE GROUP   DISP. X,IN   DISP. Y,IN   DISP. Z,IN   ROT. X,RAD   ROT. Y,RAD
ROT. Z,RAD
      **********  ***********  ***********  ***********  ***********  ***********
***********
          1          0.083940   1.0456E-03   3.6566E-03  -1.3056E-06   1.8411E-04
1.5184E-04
          2            0.1005   1.1631E-03   3.6566E-03  -1.3056E-06   1.8411E-04
1.5184E-04
          3            0.1171   1.2806E-03   3.6566E-03  -1.3056E-06   1.8411E-04
1.5184E-04
          4            0.1336   1.3981E-03   3.6566E-03  -1.3056E-06   1.8411E-04
1.5184E-04
          5            0.1502   1.5156E-03   3.6566E-03  -1.3056E-06   1.8411E-04
1.5184E-04
          6          0.074830   1.0456E-03   3.5783E-03  -1.3056E-06   1.8411E-04
1.5184E-04
          7          0.091400   1.1631E-03   3.5783E-03  -1.3056E-06   1.8411E-04
1.5184E-04
          8            0.1080   1.2806E-03   3.5783E-03  -1.3056E-06   1.8411E-04
1.5184E-04
          9            0.1245   1.3981E-03   3.5783E-03  -1.3056E-06   1.8411E-04
1.5184E-04
         10            0.1411   1.5156E-03   3.5783E-03  -1.3056E-06   1.8411E-04
1.5184E-04
         11          0.065720   1.0456E-03   3.5000E-03  -1.3056E-06   1.8411E-04
1.5184E-04
         12          0.082290   1.1631E-03   3.5000E-03  -1.3056E-06   1.8411E-04
1.5184E-04
         13          0.098859   1.2806E-03   3.5000E-03  -1.3056E-06   1.8411E-04
1.5184E-04
         14            0.1154   1.3981E-03   3.5000E-03  -1.3056E-06   1.8411E-04
1.5184E-04
         15            0.1320   1.5156E-03   3.5000E-03  -1.3056E-06   1.8411E-04
1.5184E-04

       MINIMUM       0.065720   1.0456E-03   3.5000E-03  -1.3056E-06   1.8411E-04
1.5184E-04
       Pile N.         11            1           11            1            1
    1
       MAXIMUM         0.1502   1.5156E-03   3.6566E-03  -1.3056E-06   1.8411E-04
1.5184E-04
       Pile N.          5            5            1            1            1
```

1

* PILE TOP REACTIONS *

PILE GROUP	FOR. X,KIP	FOR. Y,KIP	FOR. Z,KIP	MOM X,KIP-IN	MOM Y,KIP-IN	MOM Z,KIP-IN
**********	**********	**********	**********	**********	**********	**********
1	105.86	-6.0339	-0.1071	4.8827	37.596	401.75
2	124.31	-8.3929	-0.1384	4.8682	37.509	430.53
3	142.75	-10.803	-0.1620	4.8485	37.391	457.97
4	161.36	-12.238	-0.1595	4.8641	37.484	506.42
5	179.82	-14.528	-0.1736	4.8489	37.393	536.64
6	96.719	3.9441	-0.4208	-0.058497	125.41	103.13
7	114.40	4.0232	-0.4407	-0.058497	125.47	104.55
8	132.09	4.1000	-0.4600	-0.058497	125.52	105.94
9	149.78	4.4419	-0.4004	-0.058497	126.59	111.28
10	167.46	4.5586	-0.4097	-0.058497	126.79	113.26
11	85.191	8.2369	-0.1257	-5.8208	42.549	-66.314
12	103.76	10.188	-0.1832	-5.7566	42.164	-106.33
13	122.31	12.317	-0.2193	-5.6895	41.761	-141.92
14	140.96	13.777	-0.2163	-5.6587	41.576	-189.10
15	159.50	15.928	-0.2343	-5.6075	41.269	-223.29
MINIMUM	85.191	-14.528	-0.4600	-5.8208	37.391	-223.29
Pile N.	11	5	8	11	3	15
MAXIMUM	179.82	15.928	-0.1071	4.8827	126.79	536.64
Pile N.	5	15	1	1	10	5

THE PILE COORDINATE SYSTEM (LOCAL AXES)

```
      ---------------------------------------

      * PILE TOP DISPLACEMENTS *

     PILE GROUP   DISP. x,IN   DISP. y,IN   DISP. z,IN   ROT. x,RAD   ROT. y,RAD
ROT. z,RAD
     **********  ***********  ***********  ***********  ***********  ***********
***********
         1          0.082627     0.014828   3.6566E-03  -3.1548E-05   1.8139E-04
1.5184E-04
         2          0.098952     0.017667   3.6566E-03  -3.1548E-05   1.8139E-04
1.5184E-04
         3            0.1153     0.020506   3.6566E-03  -3.1548E-05   1.8139E-04
1.5184E-04
         4            0.1316     0.023346   3.6566E-03  -3.1548E-05   1.8139E-04
1.5184E-04
         5            0.1479     0.026185   3.6566E-03  -3.1548E-05   1.8139E-04
1.5184E-04
         6          0.074830   3.5783E-03  -1.0456E-03  -1.3056E-06   1.5184E-04
-1.8411E-04
         7          0.091400   3.5783E-03  -1.1631E-03  -1.3056E-06   1.5184E-04
-1.8411E-04
         8            0.1080   3.5783E-03  -1.2806E-03  -1.3056E-06   1.5184E-04
-1.8411E-04
         9            0.1245   3.5783E-03  -1.3981E-03  -1.3056E-06   1.5184E-04
-1.8411E-04
        10            0.1411   3.5783E-03  -1.5156E-03  -1.3056E-06   1.5184E-04
-1.8411E-04
        11          0.064998  -9.7702E-03   3.5000E-03   2.8972E-05   1.8182E-04
1.5184E-04
        12          0.081362    -0.012378   3.5000E-03   2.8972E-05   1.8182E-04
1.5184E-04
        13          0.097726    -0.014985   3.5000E-03   2.8972E-05   1.8182E-04
1.5184E-04
        14            0.1141    -0.017593   3.5000E-03   2.8972E-05   1.8182E-04
1.5184E-04
        15            0.1305    -0.020200   3.5000E-03   2.8972E-05   1.8182E-04
1.5184E-04

      MINIMUM       0.064998    -0.020200  -1.5156E-03  -3.1548E-05   1.5184E-04
-1.8411E-04
      Pile N.         11           15           10            1            6
   6
      MAXIMUM         0.1479     0.026185   3.6566E-03   2.8972E-05   1.8182E-04
1.5184E-04
      Pile N.          5            5            1           11           11
   1

      * PILE TOP REACTIONS *
```

PILE GROUP	AXIAL,KIP	LAT. y,KIP	LAT. z,KIP	MOM x,KIP-IN	MOM y,KIP-IN	MOM z,KIP-IN
**********	**********	**********	**********	**********	**********	**********
1	105.41	11.447	-0.1071	-1.3629	37.887	401.75
2	124.00	12.153	-0.1384	-1.3629	37.799	430.53
3	142.59	12.807	-0.1620	-1.3629	37.679	457.97
4	161.18	14.450	-0.1595	-1.3629	37.774	506.42
5	179.76	15.225	-0.1736	-1.3629	37.682	536.64
6	96.719	-0.4208	-3.9441	-0.058497	103.13	-125.41
7	114.40	-0.4407	-4.0232	-0.058497	104.55	-125.47
8	132.09	-0.4600	-4.1000	-0.058497	105.94	-125.52
9	149.78	-0.4004	-4.4419	-0.058497	111.28	-126.59
10	167.46	-0.4097	-4.5586	-0.058497	113.26	-126.79
11	85.386	-5.8770	-0.1257	1.2517	42.927	-66.314
12	104.03	-7.0055	-0.1832	1.2517	42.537	-106.33
13	122.67	-7.9528	-0.2193	1.2517	42.128	-141.92
14	141.31	-9.5793	-0.2163	1.2517	41.941	-189.10
15	159.95	-10.505	-0.2343	1.2517	41.629	-223.29
MINIMUM	85.386	-10.505	-4.5586	-1.3629	37.679	-223.29
Pile N.	11	15	10	1	3	15
MAXIMUM	179.76	15.225	-0.1071	1.2517	113.26	536.64
Pile N.	5	5	1	11	10	5

PILE GROUP	STRESS,KIP/IN**2
**********	**********
1	6.3257
2	7.1514
3	7.9701
4	8.9158

```
          5            9.7531
          6            5.7349
          7            6.3887
          8            7.0421
          9            7.7768
         10            8.4425
         11            4.0154
         12            4.7916
         13            5.5860
         14            6.4607
         15            7.2886

       MINIMUM         4.0154
       Pile N.         11
       MAXIMUM         9.7531
       Pile N.          5

       * EFFECTS FOR LATERALLY LOADED PILE *

       * MINIMUM VALUES AND LOCATIONS *

     PILE     DISPL.      DISPL.      MOMENT      MOMENT       SHEAR       SHEAR
SOIL REACT  SOIL REACT     TOTAL    FLEX. RIG.  FLEX. RIG.
               y-DIR       z-DIR       z-DIR       y-DIR       y-DIR       z-DIR
  y-DIR       z-DIR      STRESS       z-DIR       y-DIR
                IN          IN        KIP-IN      KIP-IN        KIP         KIP
 KIP/IN      KIP/IN     KIP/IN**2   KIP-IN**2   KIP-IN**2
    ******  **********  **********  **********  **********  **********  **********
**********  **********  **********  **********  **********
        1  -4.6060E-04 -1.2069E-03     -401.75     -2.9435     -0.6871     -0.5428
-7.8951E-03 -8.8520E-03      3.7282  3.1594E+07  9.1843E+06
     x(FT)      17.480      6.0800      0.0000      12.160      13.680      2.2800
   18.240      4.5600      62.320      0.0000      0.0000
        2  -5.6324E-04 -1.2393E-03     -430.53     -3.0385     -0.7836     -0.5288
-8.7834E-03 -8.2439E-03      4.3856  3.1594E+07  9.1843E+06
     x(FT)      17.480      6.0800      0.0000      12.160      13.680      2.2800
   18.240      4.5600      62.320      0.0000      0.0000
        3  -6.5655E-04 -1.2705E-03     -457.97     -3.0552     -0.8612     -0.5171
-9.4700E-03 -7.7449E-03      5.0430  3.1594E+07  9.1843E+06
     x(FT)      17.480      6.0800      0.0000      12.160      13.680      2.2800
   18.240      4.5600      60.800      0.0000      0.0000
        4  -7.3754E-04 -1.2491E-03     -506.42     -3.0122     -0.9790     -0.5214
-0.010743 -7.8231E-03      5.7004  3.1594E+07  9.1843E+06
     x(FT)      16.720      6.0800      0.0000      12.160      13.680      2.2800
   18.240      4.5600      60.800      0.0000      0.0000
        5  -8.3677E-04 -1.2676E-03     -536.64     -3.0556     -1.0691     -0.5142
-0.011570 -7.4999E-03      6.3579  3.1594E+07  9.1843E+06
     x(FT)      17.480      6.0800      0.0000      11.400      13.680      2.2800
   18.240      4.5600      63.080      0.0000      0.0000
        6  -1.7256E-03 -2.2680E-03     -7.9871     -4.2552     -1.7199     -3.9001
```

```
-0.032288     -0.1152      3.4207  3.1594E+07  9.1843E+06
     x(FT)      6.0800      1.5200      14.440      6.8400      2.2800      0.0000
   4.5600      2.2800      57.760      0.0000      0.0000
        7  -1.7282E-03 -2.3659E-03     -7.9984     -4.4624     -1.7148     -3.9748
-0.032117     -0.1168      4.0462  3.1594E+07  9.1843E+06
     x(FT)      6.0800      1.5200      14.440      6.8400      2.2800      0.0000
   4.5600      2.2800      57.760      0.0000      0.0000
        8  -1.7307E-03 -2.4640E-03     -8.0095     -4.6697     -1.7098     -4.0474
-0.031948     -0.1184      4.6717  3.1594E+07  9.1843E+06
     x(FT)      6.0800      1.5200      14.440      6.8400      2.2800      0.0000
   4.5600      2.2800      56.240      0.0000      0.0000
        9  -1.6617E-03 -2.5119E-03     -7.8926     -5.1412     -1.7656     -4.3785
-0.033956     -0.1284      5.2972  3.1594E+07  9.1843E+06
     x(FT)      6.0800      1.5200      13.680      6.8400      2.2800      0.0000
   4.5600      2.2800      57.000      0.0000      0.0000
       10  -1.6547E-03 -2.6025E-03     -7.8972     -5.3883     -1.7688     -4.4897
-0.034076     -0.1312      5.9227  3.1594E+07  9.1843E+06
     x(FT)      6.0800      1.5200      13.680      6.0800      2.2800      0.0000
   4.5600      2.2800      57.000      0.0000      0.0000
       11  -9.7702E-03 -8.0240E-04     -69.397     -1.6576     -5.5831     -0.7486
  -0.1484   -0.018799      3.0199  3.1594E+07  9.1843E+06
     x(FT)      0.0000      5.3200      3.8000      11.400      0.0000      2.2800
   2.2800      4.5600      59.280      0.0000      0.0000
       12    -0.012378 -8.7824E-04     -69.290     -1.8361     -6.6658     -0.6979
  -0.1691   -0.014967      3.6792  3.1594E+07  9.1843E+06
     x(FT)      0.0000      5.3200      4.5600      10.640      0.0000      2.2800
   3.0400      4.5600      60.040      0.0000      0.0000
       13    -0.014985 -9.4443E-04     -69.261     -1.9932     -7.5720     -0.6621
  -0.1860   -0.012744      4.3385  3.1594E+07  9.1843E+06
     x(FT)      0.0000      5.3200      4.5600      10.640      0.0000      2.2800
   3.0400      4.5600      60.040      0.0000      0.0000
       14    -0.017593 -9.5622E-04     -73.929     -2.1451     -9.1148     -0.6522
  -0.2188   -0.011992      4.9979  3.1594E+07  9.1843E+06
     x(FT)      0.0000      5.3200      5.3200      10.640      0.0000      2.2800
   3.0400      4.5600      60.800      0.0000      0.0000
       15    -0.020200 -1.0015E-03     -77.262     -2.2617     -9.9946     -0.6323
  -0.2352   -0.010985      5.6572  3.1594E+07  9.1843E+06
     x(FT)      0.0000      5.3200      6.0800      10.640      0.0000      2.2800
   3.0400      4.5600      60.800      0.0000      0.0000

      Min.   -0.020200 -2.6025E-03     -536.64     -5.3883     -9.9946     -4.4897
  -0.2352     -0.1312      3.0199  3.1594E+07  9.1843E+06
   Pile N.      15          10           5          10          15          10
   15          10          11           1           1

       * MAXIMUM VALUES AND LOCATIONS *

     PILE     DISPL.      DISPL.      MOMENT      MOMENT       SHEAR       SHEAR
SOIL REACT  SOIL REACT     TOTAL    FLEX. RIG.  FLEX. RIG.
               y-DIR       z-DIR       z-DIR       y-DIR       y-DIR       z-DIR
```

```
  y-DIR       z-DIR      STRESS       z-DIR       y-DIR
                IN          IN        KIP-IN      KIP-IN        KIP         KIP
 KIP/IN      KIP/IN     KIP/IN**2   KIP-IN**2   KIP-IN**2
    ******  **********  **********  **********  **********  **********  **********
**********  **********  **********  **********  **********
        1     0.015747  3.6566E-03      52.324      37.887      11.063    0.052030
   0.2291    0.023774      6.3257  3.1594E+07  9.1843E+06
     x(FT)      1.5200      0.0000      11.400      0.0000      0.0000      13.680
   3.0400      0.7600      0.0000      0.0000      0.0000
        2     0.018485  3.6566E-03      60.905      37.799      11.727    0.052226
   0.2403    0.021072      7.1514  3.1594E+07  9.1843E+06
     x(FT)      0.7600      0.0000      11.400      0.0000      0.0000      13.680
   3.0400      0.7600      0.0000      0.0000      0.0000
        3     0.021288  3.6566E-03      69.039      37.679      12.342    0.050782
   0.2504    0.018987      7.9701  3.1594E+07  9.1843E+06
     x(FT)      0.7600      0.0000      11.400      0.0000      0.0000      13.680
   3.0400      0.7600      0.0000      0.0000      0.0000
        4     0.024064  3.6566E-03      77.942      37.774      13.896    0.050862
   0.2833    0.019430      8.9158  3.1594E+07  9.1843E+06
     x(FT)      0.7600      0.0000      10.640      0.0000      0.0000      13.680
   3.0400      0.0000      0.0000      0.0000      0.0000
        5     0.026863  3.6566E-03      86.517      37.682      14.625    0.050365
   0.2962    0.018784      9.7531  3.1594E+07  9.1843E+06
     x(FT)      0.7600      0.0000      10.640      0.0000      0.0000      13.680
   3.0400      0.0000      0.0000      0.0000      0.0000
        6   3.5783E-03  5.9510E-05      125.41      103.13      0.1266    0.061418
 0.084037  9.9126E-04      5.7349  3.1594E+07  9.1843E+06
     x(FT)      0.0000      12.920      0.0000      0.0000      17.480      10.640
   0.7600      14.440      0.0000      0.0000      0.0000
        7   3.5783E-03  6.2990E-05      125.47      104.55      0.1268    0.064204
 0.082387  1.0311E-03      6.3887  3.1594E+07  9.1843E+06
     x(FT)      0.0000      12.920      0.0000      0.0000      17.480      10.640
   0.7600      14.440      0.0000      0.0000      0.0000
        8   3.5783E-03  6.6480E-05      125.52      105.94      0.1270    0.066999
 0.080771  1.0710E-03      7.0421  3.1594E+07  9.1843E+06
     x(FT)      0.0000      12.920      0.0000      0.0000      17.480      10.640
   0.7600      14.440      0.0000      0.0000      0.0000
        9   3.5783E-03  7.5555E-05      126.59      111.28      0.1276    0.074871
 0.087737  1.1909E-03      7.7768  3.1594E+07  9.1843E+06
     x(FT)      0.0000      12.160      0.0000      0.0000      17.480      9.8800
   0.7600      13.680      0.0000      0.0000      0.0000
       10   3.5783E-03  8.0462E-05      126.79      113.26      0.1277    0.078890
 0.087210  1.2471E-03      8.4425  3.1594E+07  9.1843E+06
     x(FT)      0.0000      12.160      0.0000      0.0000      17.480      9.8800
   0.7600      13.680      0.0000      0.0000      0.0000
       11   7.4939E-04  3.5000E-03      66.314      42.927      0.7867    0.026264
8.0364E-03    0.034100      4.0154  3.1594E+07  9.1843E+06
     x(FT)      10.640      0.0000      0.0000      0.0000      6.8400      14.440
   11.400      0.7600      0.0000      0.0000      0.0000
       12   6.8182E-04  3.5000E-03      106.33      42.537      0.7392    0.028439
```

```
7.5186E-03    0.028175      4.7916  3.1594E+07  9.1843E+06
     x(FT)      12.160      0.0000      0.0000      0.0000      8.3600      13.680
   12.920      0.7600      0.0000      0.0000      0.0000
       13   6.8305E-04  3.5000E-03      141.92      42.128      0.7357    0.030338
7.4794E-03    0.024165      5.5860  3.1594E+07  9.1843E+06
     x(FT)      12.920      0.0000      0.0000      0.0000      9.1200      13.680
   13.680      0.7600      0.0000      0.0000      0.0000
       14   7.1864E-04  3.5000E-03      189.10      41.941      0.8178    0.032824
8.4259E-03    0.023600      6.4607  3.1594E+07  9.1843E+06
     x(FT)      13.680      0.0000      0.0000      0.0000      9.8800      13.680
   14.440      0.7600      0.0000      0.0000      0.0000
       15   7.7723E-04  3.5000E-03      223.29      41.629      0.8659    0.034303
8.9178E-03    0.021441      7.2886  3.1594E+07  9.1843E+06
     x(FT)      13.680      0.0000      0.0000      0.0000      10.640      13.680
   15.200      0.7600      0.0000      0.0000      0.0000

      Max.    0.026863  3.6566E-03      223.29      113.26      14.625    0.078890
   0.2962    0.034100      9.7531  3.1594E+07  9.1843E+06
   Pile N.       5           1          15          10           5          10
    5          11           5           1           1


     LOAD CASE :     6
     CASE NAME : STR I Min-L2

     LOAD TYPE : Dead, DL

       REDUCTION FACTORS FOR CLOSELY-SPACED PILE GROUPS, COMBINED Y AND Z DIRECTIONS
       ESTIMATED USING MOVEMENT IN THE DIRECTION OF PILE CAP DISPLACEMENTS

            GROUP NO     P-FACTOR     Y-FACTOR

                1           0.8729       1.0000
                2           0.8729       1.0000
                3           0.8729       1.0000
                4           0.9719       1.0000
                5           0.9858       1.0000
                6           0.8715       1.0000
                7           0.8715       1.0000
                8           0.8715       1.0000
                9           0.9707       1.0000
               10           0.9846       1.0000
               11           0.8705       1.0000
               12           0.8705       1.0000
               13           0.8705       1.0000
               14           0.9697       1.0000
               15           0.9836       1.0000
```

```
* TABLE L *   COMPUTATION ON PILE CAP


* EQUIVALENT CONCENTRATED LOAD AT ORIGIN *


      VERT. LOAD,KIPS    HOR. LOAD Y,KIPS   HOR. LOAD Z,KIPS
            2240.76            30.9100            0.00000

     MOMENT X ,KIP-IN    MOMENT Y,KIP-IN    MOMENT Z,KIP-IN
            0.00000            38171.4            8261.37


* DISPLACEMENT OF GROUPED PILE FOUNDATION AT ORIGIN *


       VERTICAL ,IN      HORIZONTAL Y,IN     HORIZONTAL Z,IN
            0.12338        1.08441E-03        2.28564E-03

     ANGLE ROT. X,RAD    ANGLE ROT. Y,RAD    ANGLE ROT. Z,RAD
        6.28698E-08        1.38691E-04        1.53578E-04


* PASSIVE RESISTANCE IN PILE CAP *

        HOR. LOAD Y,KIP    HOR. LOAD Z,KIP      POSITION, FT      EQ. DIAM, FT
            0.52136            5.06329           -1.55556           35.1141


  THE GLOBAL STRUCTURAL COORDINATE SYSTEM
  ---------------------------------------

  * PILE TOP DISPLACEMENTS *

   PILE GROUP   DISP. X,IN   DISP. Y,IN   DISP. Z,IN   ROT. X,RAD   ROT. Y,RAD
ROT. Z,RAD
   **********  ***********  ***********  ***********  ***********  ***********
***********
        1           0.1076   1.0957E-03   2.2819E-03   6.2870E-08   1.3869E-04
1.5358E-04
        2           0.1201   1.0901E-03   2.2819E-03   6.2870E-08   1.3869E-04
1.5358E-04
        3           0.1326   1.0844E-03   2.2819E-03   6.2870E-08   1.3869E-04
1.5358E-04
        4           0.1451   1.0788E-03   2.2819E-03   6.2870E-08   1.3869E-04
1.5358E-04
        5           0.1576   1.0731E-03   2.2819E-03   6.2870E-08   1.3869E-04
1.5358E-04
        6         0.098414   1.0957E-03   2.2856E-03   6.2870E-08   1.3869E-04
```

```
1.5358E-04
          7            0.1109   1.0901E-03   2.2856E-03   6.2870E-08   1.3869E-04
1.5358E-04
          8            0.1234   1.0844E-03   2.2856E-03   6.2870E-08   1.3869E-04
1.5358E-04
          9            0.1359   1.0788E-03   2.2856E-03   6.2870E-08   1.3869E-04
1.5358E-04
         10            0.1483   1.0731E-03   2.2856E-03   6.2870E-08   1.3869E-04
1.5358E-04
         11          0.089199   1.0957E-03   2.2894E-03   6.2870E-08   1.3869E-04
1.5358E-04
         12            0.1017   1.0901E-03   2.2894E-03   6.2870E-08   1.3869E-04
1.5358E-04
         13            0.1142   1.0844E-03   2.2894E-03   6.2870E-08   1.3869E-04
1.5358E-04
         14            0.1267   1.0788E-03   2.2894E-03   6.2870E-08   1.3869E-04
1.5358E-04
         15            0.1391   1.0731E-03   2.2894E-03   6.2870E-08   1.3869E-04
1.5358E-04

       MINIMUM       0.089199   1.0731E-03   2.2819E-03   6.2870E-08   1.3869E-04
1.5358E-04
       Pile N.         11            5            1            1            1
    1
       MAXIMUM         0.1576   1.0957E-03   2.2894E-03   6.2870E-08   1.3869E-04
1.5358E-04
       Pile N.          5            1           11            1            1
    1

       * PILE TOP REACTIONS *

      PILE GROUP   FOR. X,KIP   FOR. Y,KIP   FOR. Z,KIP MOM X,KIP-IN MOM Y,KIP-IN
MOM Z,KIP-IN
      **********  ***********  ***********  ***********  ***********  ***********
***********
          1            132.26      -9.4084      -0.3055       4.4218       32.513
   443.84
          2            146.17      -11.258      -0.3081       4.3851       32.293
   463.27
          3            160.07      -13.127      -0.3098       4.3507       32.086
   482.35
          4            174.16      -13.880      -0.3093       4.3893       32.318
   525.70
          5            188.09      -15.584      -0.3104       4.3686       32.194
   548.70
          6            121.89       4.1801      -0.8440   2.8168E-03       107.63
   106.28
          7            135.21       4.1762      -0.8438   2.8168E-03       107.61
   106.19
          8            148.54       4.1724      -0.8436   2.8168E-03       107.58
```

```
  106.11
         9            161.86       4.4489      -0.8173   2.8168E-03       109.06
  110.09
        10            175.18       4.4828      -0.8129   2.8168E-03       109.23
  110.55
        11            111.51       10.852      -0.3454      -4.9839       35.919
 -125.05
        12            125.47       12.445      -0.3479      -4.8975       35.401
 -152.69
        13            139.41       14.103      -0.3489      -4.8214       34.944
 -178.61
        14            153.49       14.928      -0.3421      -4.8140       34.899
 -219.70
        15            167.45       16.503      -0.3421      -4.7623       34.589
 -246.75

      MINIMUM         111.51      -15.584      -0.8440      -4.9839       32.086
 -246.75
      Pile N.         11            5            6           11            3
  15
      MAXIMUM         188.09       16.503      -0.3055       4.4218       109.23
  548.70
      Pile N.          5           15            1            1           10
   5


      THE PILE COORDINATE SYSTEM (LOCAL AXES)
      ---------------------------------------

      * PILE TOP DISPLACEMENTS *

     PILE GROUP   DISP. x,IN   DISP. y,IN   DISP. z,IN   ROT. x,RAD   ROT. y,RAD
ROT. z,RAD
     **********  ***********  ***********  ***********  ***********  ***********
***********
         1            0.1060     0.018771   2.2819E-03  -2.2733E-05   1.3682E-04
1.5358E-04
         2            0.1183     0.020817   2.2819E-03  -2.2733E-05   1.3682E-04
1.5358E-04
         3            0.1306     0.022863   2.2819E-03  -2.2733E-05   1.3682E-04
1.5358E-04
         4            0.1429     0.024909   2.2819E-03  -2.2733E-05   1.3682E-04
1.5358E-04
         5            0.1552     0.026954   2.2819E-03  -2.2733E-05   1.3682E-04
1.5358E-04
         6          0.098414   2.2856E-03  -1.0957E-03   6.2870E-08   1.5358E-04
-1.3869E-04
         7            0.1109   2.2856E-03  -1.0901E-03   6.2870E-08   1.5358E-04
-1.3869E-04
         8            0.1234   2.2856E-03  -1.0844E-03   6.2870E-08   1.5358E-04
```

```
-1.3869E-04
          9            0.1359   2.2856E-03  -1.0788E-03   6.2870E-08   1.5358E-04
-1.3869E-04
         10            0.1483   2.2856E-03  -1.0731E-03   6.2870E-08   1.5358E-04
-1.3869E-04
         11          0.088166    -0.013580   2.2894E-03   2.2857E-05   1.3679E-04
1.5358E-04
         12            0.1005    -0.015637   2.2894E-03   2.2857E-05   1.3679E-04
1.5358E-04
         13            0.1128    -0.017694   2.2894E-03   2.2857E-05   1.3679E-04
1.5358E-04
         14            0.1251    -0.019751   2.2894E-03   2.2857E-05   1.3679E-04
1.5358E-04
         15            0.1374    -0.021809   2.2894E-03   2.2857E-05   1.3679E-04
1.5358E-04

       MINIMUM       0.088166    -0.021809  -1.0957E-03  -2.2733E-05   1.3679E-04
-1.3869E-04
       Pile N.         11           15            6            1           11
    6
       MAXIMUM         0.1552     0.026954   2.2894E-03   2.2857E-05   1.5358E-04
1.5358E-04
       Pile N.          5            5           11           11            6
    1

       * PILE TOP REACTIONS *

      PILE GROUP   AXIAL,KIP    LAT. y,KIP   LAT. z,KIP MOM x,KIP-IN MOM y,KIP-IN
MOM z,KIP-IN
      **********  ***********  ***********  ***********  ***********  ***********
***********
          1            132.01       12.458      -0.3055      -0.9821       32.797
   443.84
          2            146.03       12.918      -0.3081      -0.9821       32.574
   463.27
          3            160.05       13.360      -0.3098      -0.9821       32.365
   482.35
          4            174.07       14.933      -0.3093      -0.9821       32.600
   525.70
          5            188.09       15.542      -0.3104      -0.9821       32.474
   548.70
          6            121.89      -0.8440      -4.1801   2.8168E-03       106.28
  -107.63
          7            135.21      -0.8438      -4.1762   2.8168E-03       106.19
  -107.61
          8            148.54      -0.8436      -4.1724   2.8168E-03       106.11
  -107.58
          9            161.86      -0.8173      -4.4489   2.8168E-03       110.09
  -109.06
         10            175.18      -0.8129      -4.4828   2.8168E-03       110.55
```

```
-109.23
       11            111.78      -7.6233      -0.3454       0.9875       36.250
-125.05
       12            125.81      -8.3461      -0.3479       0.9875       35.724
-152.69
       13            139.83      -9.0023      -0.3489       0.9875       35.261
-178.61
       14            153.86      -10.502      -0.3421       0.9875       35.216
-219.70
       15            167.88      -11.242      -0.3421       0.9875       34.902
-246.75

     MINIMUM         111.78      -11.242      -4.4828      -0.9821       32.365
-246.75
     Pile N.         11           15           10            1            3
 15
     MAXIMUM         188.09       15.542      -0.3055       0.9875       110.55
 548.70
     Pile N.          5            5            1           11           10
  5

    PILE GROUP   STRESS,KIP/IN**2
    **********  ****************
        1            7.4852
        2            8.0959
        3            8.7050
        4            9.4622
        5            10.096
        6            6.6547
        7            7.1242
        8            7.5936
        9            8.1483
       10            8.6291
       11            5.0395
       12            5.6548
       13            6.2733
       14            6.9845
       15            7.6252

     MINIMUM         5.0395
     Pile N.         11
     MAXIMUM         10.096
     Pile N.          5

     * EFFECTS FOR LATERALLY LOADED PILE *

     * MINIMUM VALUES AND LOCATIONS *

    PILE     DISPL.      DISPL.      MOMENT      MOMENT       SHEAR       SHEAR
SOIL REACT  SOIL REACT     TOTAL    FLEX. RIG.  FLEX. RIG.
```

```
                y-DIR       z-DIR       z-DIR       y-DIR       y-DIR       z-DIR
  y-DIR       z-DIR      STRESS       z-DIR       y-DIR
                IN          IN        KIP-IN      KIP-IN        KIP         KIP
 KIP/IN      KIP/IN     KIP/IN**2   KIP-IN**2   KIP-IN**2
    ******  **********  **********  **********  **********  **********  **********
**********  **********  **********  **********  **********
        1  -6.3400E-04 -1.0818E-03     -443.84     -2.5405     -0.8588     -0.4812
-9.4608E-03 -9.0507E-03      4.6688  3.1594E+07  9.1843E+06
     x(FT)      16.720      5.3200      0.0000      12.160      13.680      2.2800
   18.240      3.0400      62.320      0.0000      0.0000
        2  -6.9096E-04 -1.1038E-03     -463.27     -2.5271     -0.9004     -0.4721
-9.8270E-03 -8.6464E-03      5.1647  3.1594E+07  9.1843E+06
     x(FT)      17.480      5.3200      0.0000      12.160      13.680      2.2800
   18.240      3.0400      63.080      0.0000      0.0000
        3  -7.5385E-04 -1.1237E-03     -482.35     -2.5461     -0.9474     -0.4639
-0.010257 -8.2867E-03      5.6605  3.1594E+07  9.1843E+06
     x(FT)      17.480      5.3200      0.0000      11.400      13.680      2.2800
   19.000      3.0400      63.080      0.0000      0.0000
        4  -8.1574E-04 -1.0953E-03     -525.70     -2.5771     -1.0534     -0.4731
-0.011437 -8.5526E-03      6.1564  3.1594E+07  9.1843E+06
     x(FT)      16.720      5.3200      0.0000      11.400      13.680      2.2800
   18.240      3.0400      63.080      0.0000      0.0000
        5  -8.9560E-04 -1.1055E-03     -548.70     -2.6355     -1.1277     -0.4682
-0.012131 -8.3211E-03      6.6523  3.1594E+07  9.1843E+06
     x(FT)      16.720      5.3200      0.0000      11.400      13.680      2.2800
   18.240      3.0400      63.080      0.0000      0.0000
        6  -1.3487E-03 -2.3115E-03     -6.4830     -4.5699     -1.5402     -4.1277
-0.028577     -0.1156      4.3110  3.1594E+07  9.1843E+06
     x(FT)      6.0800      1.5200      13.680      6.8400      1.5200      0.0000
   4.5600      2.2800      57.000      0.0000      0.0000
        7  -1.3490E-03 -2.3069E-03     -6.4856     -4.5620     -1.5408     -4.1249
-0.028590     -0.1155      4.7822  3.1594E+07  9.1843E+06
     x(FT)      6.0800      1.5200      13.680      6.8400      1.5200      0.0000
   4.5600      2.2800      57.000      0.0000      0.0000
        8  -1.3494E-03 -2.3024E-03     -6.4883     -4.5540     -1.5414     -4.1220
-0.028604     -0.1154      5.2534  3.1594E+07  9.1843E+06
     x(FT)      6.0800      1.5200      13.680      6.8400      1.5200      0.0000
   4.5600      2.2800      57.000      0.0000      0.0000
        9  -1.2862E-03 -2.2468E-03     -6.3637     -4.7883     -1.5984     -4.3933
-0.030620     -0.1238      5.7246  3.1594E+07  9.1843E+06
     x(FT)      5.3200      1.5200      12.920      6.8400      1.5200      0.0000
   4.5600      1.5200      56.240      0.0000      0.0000
       10  -1.2789E-03 -2.2355E-03     -6.3621     -4.8086     -1.6065     -4.4273
-0.030906     -0.1251      6.1958  3.1594E+07  9.1843E+06
     x(FT)      5.3200      1.5200      12.920      6.8400      1.5200      0.0000
   4.5600      1.5200      56.240      0.0000      0.0000
       11    -0.013580 -7.1458E-04     -71.007     -1.5924     -7.2523     -0.6054
  -0.1804   -0.011898      3.9534  3.1594E+07  9.1843E+06
     x(FT)      0.0000      4.5600      4.5600      9.8800      0.0000      2.2800
   3.0400      4.5600      60.040      0.0000      0.0000
```

```
      12    -0.015637 -7.6069E-04     -70.693     -1.7159     -7.9435     -0.5798
  -0.1931   -0.010976      4.4494  3.1594E+07  9.1843E+06
     x(FT)      0.0000      4.5600      4.5600      9.8800      0.0000      2.2800
   3.0400      3.0400      60.040      0.0000      0.0000
      13    -0.017694 -8.0308E-04     -71.856     -1.8152     -8.5698     -0.5589
  -0.2043   -0.010247      4.9455  3.1594E+07  9.1843E+06
     x(FT)      0.0000      5.3200      6.0800      9.8800      0.0000      2.2800
   3.0400      3.0400      60.800      0.0000      0.0000
      14    -0.019751 -8.0069E-04     -78.095     -1.9305     -9.9891     -0.5587
  -0.2353   -0.010293      5.4415  3.1594E+07  9.1843E+06
     x(FT)      0.0000      5.3200      6.0800      9.8800      0.0000      2.2800
   3.0400      3.0400      60.800      0.0000      0.0000
      15    -0.021808 -8.3047E-04     -81.647     -2.0073     -10.691     -0.5457
  -0.2485 -9.8515E-03      5.9376  3.1594E+07  9.1843E+06
     x(FT)      0.0000      5.3200      6.8400      9.8800      0.0000      2.2800
   3.0400      3.0400      60.800      0.0000      0.0000

     Min.    -0.021808 -2.3115E-03     -548.70     -4.8086     -10.691     -4.4273
  -0.2485     -0.1251      3.9534  3.1594E+07  9.1843E+06
   Pile N.      15           6           5          10          15          10
   15          10          11           1           1

      * MAXIMUM VALUES AND LOCATIONS *

     PILE     DISPL.      DISPL.      MOMENT      MOMENT       SHEAR       SHEAR
SOIL REACT  SOIL REACT     TOTAL    FLEX. RIG.  FLEX. RIG.
               y-DIR       z-DIR       z-DIR       y-DIR       y-DIR       z-DIR
  y-DIR       z-DIR      STRESS       z-DIR       y-DIR
               IN          IN        KIP-IN      KIP-IN        KIP         KIP
 KIP/IN      KIP/IN     KIP/IN**2   KIP-IN**2   KIP-IN**2
    ******  **********  **********  **********  **********  **********  **********
**********  **********  **********  **********  **********
        1     0.019587  2.2819E-03      65.538      32.797      12.013    0.045504
   0.2445    0.012069      7.4852  3.1594E+07  9.1843E+06
     x(FT)      0.7600      0.0000      11.400      0.0000      0.0000      13.680
   3.0400      0.0000      0.0000      0.0000      0.0000
        2     0.021607  2.2819E-03      71.083      32.574      12.447    0.043977
   0.2517    0.011564      8.0959  3.1594E+07  9.1843E+06
     x(FT)      0.7600      0.0000      11.400      0.0000      0.0000      13.680
   3.0400      0.0000      0.0000      0.0000      0.0000
        3     0.023628  2.2819E-03      76.860      32.365      12.863    0.042950
   0.2583    0.011124      8.7050  3.1594E+07  9.1843E+06
     x(FT)      0.7600      0.0000      11.400      0.0000      0.0000      13.680
   3.0400      0.0000      0.0000      0.0000      0.0000
        4     0.025617  2.2819E-03      83.640      32.600      14.351    0.043416
   0.2910    0.011953      9.4622  3.1594E+07  9.1843E+06
     x(FT)      0.7600      0.0000      10.640      0.0000      0.0000      13.680
   3.0400      0.0000      0.0000      0.0000      0.0000
        5     0.027633  2.2819E-03      90.221      32.474      14.925    0.043645
   0.3013    0.011732      10.096  3.1594E+07  9.1843E+06
```

```
     x(FT)      0.7600      0.0000      11.400      0.0000      0.0000      13.680
   3.0400      0.0000      0.0000      0.0000      0.0000
        6   2.2856E-03  5.9343E-05      107.63      106.28      0.1017    0.067987
 0.055513  1.1432E-03      6.6547  3.1594E+07  9.1843E+06
     x(FT)      0.0000      12.920      0.0000      0.0000      16.720      10.640
   0.7600      13.680      0.0000      0.0000      0.0000
        7   2.2856E-03  5.9355E-05      107.61      106.19      0.1018    0.067977
 0.055592  1.1432E-03      7.1242  3.1594E+07  9.1843E+06
     x(FT)      0.0000      12.920      0.0000      0.0000      16.720      10.640
   0.7600      13.680      0.0000      0.0000      0.0000
        8   2.2856E-03  5.9367E-05      107.58      106.11      0.1019    0.067967
 0.055670  1.1432E-03      7.5936  3.1594E+07  9.1843E+06
     x(FT)      0.0000      12.920      0.0000      0.0000      16.720      10.640
   0.7600      13.680      0.0000      0.0000      0.0000
        9   2.2856E-03  6.4004E-05      109.06      110.09      0.1026    0.072538
 0.062197  1.2055E-03      8.1483  3.1594E+07  9.1843E+06
     x(FT)      0.0000      12.160      0.0000      0.0000      16.720      9.8800
   0.7600      13.680      0.0000      0.0000      0.0000
       10   2.2856E-03  6.4495E-05      109.23      110.55      0.1027    0.073146
 0.063190  1.2198E-03      8.6291  3.1594E+07  9.1843E+06
     x(FT)      0.0000      12.160      0.0000      0.0000      16.720      9.8800
   0.7600      12.920      0.0000      0.0000      0.0000
       11   6.9964E-04  2.2894E-03      125.05      36.250      0.7630    0.024409
7.7897E-03    0.016016      5.0395  3.1594E+07  9.1843E+06
     x(FT)      12.160      0.0000      0.0000      0.0000      8.3600      12.920
   12.920      0.7600      0.0000      0.0000      0.0000
       12   7.1487E-04  2.2894E-03      152.69      35.724      0.7746    0.026072
7.8650E-03    0.014259      5.6548  3.1594E+07  9.1843E+06
     x(FT)      12.920      0.0000      0.0000      0.0000      9.1200      12.920
   13.680      0.7600      0.0000      0.0000      0.0000
       13   7.4512E-04  2.2894E-03      178.61      35.261      0.8029    0.027383
8.1023E-03    0.012890      6.2733  3.1594E+07  9.1843E+06
     x(FT)      13.680      0.0000      0.0000      0.0000      9.8800      12.920
   14.440      0.7600      0.0000      0.0000      0.0000
       14   7.9707E-04  2.2894E-03      219.70      35.216      0.8916    0.029541
9.1710E-03    0.013172      6.9845  3.1594E+07  9.1843E+06
     x(FT)      13.680      0.0000      0.0000      0.0000      9.8800      12.920
   14.440      0.0000      0.0000      0.0000      0.0000
       15   8.4783E-04  2.2894E-03      246.75      34.902      0.9440    0.030649
9.6742E-03    0.012825      7.6252  3.1594E+07  9.1843E+06
     x(FT)      13.680      0.0000      0.0000      0.0000      10.640      12.920
   15.200      0.0000      0.0000      0.0000      0.0000

      Max.    0.027633  2.2894E-03      246.75      110.55      14.925    0.073146
   0.3013    0.016016      10.096  3.1594E+07  9.1843E+06
   Pile N.       5          11          15          10           5          10
    5          11           5           1           1
```

LOAD CASE : 7
CASE NAME : STR III-L1

LOAD TYPE : Dead, DL

REDUCTION FACTORS FOR CLOSELY-SPACED PILE GROUPS, COMBINED Y AND Z DIRECTIONS
ESTIMATED USING MOVEMENT IN THE DIRECTION OF PILE CAP DISPLACEMENTS

GROUP NO	P-FACTOR	Y-FACTOR
1	0.8697	1.0000
2	0.8697	1.0000
3	0.8697	1.0000
4	0.9455	1.0000
5	0.9562	1.0000
6	0.8369	1.0000
7	0.8369	1.0000
8	0.8369	1.0000
9	0.9154	1.0000
10	0.9265	1.0000
11	0.8089	1.0000
12	0.8089	1.0000
13	0.8089	1.0000
14	0.8898	1.0000
15	0.9013	1.0000

* TABLE L * COMPUTATION ON PILE CAP

* EQUIVALENT CONCENTRATED LOAD AT ORIGIN *

VERT. LOAD,KIPS	HOR. LOAD Y,KIPS	HOR. LOAD Z,KIPS
2183.55	29.1900	-44.5700

MOMENT X ,KIP-IN	MOMENT Y,KIP-IN	MOMENT Z,KIP-IN
0.00000	22034.8	4350.02

* DISPLACEMENT OF GROUPED PILE FOUNDATION AT ORIGIN *

VERTICAL ,IN	HORIZONTAL Y,IN	HORIZONTAL Z,IN
0.11994	1.76581E-03	-2.25184E-03

ANGLE ROT. X,RAD	ANGLE ROT. Y,RAD	ANGLE ROT. Z,RAD
4.68127E-07	7.73709E-05	7.88437E-05

```
     * PASSIVE RESISTANCE IN PILE CAP *

            HOR. LOAD Y,KIP    HOR. LOAD Z,KIP      POSITION, FT      EQ. DIAM, FT
                1.91241            3.27052           -1.55556            35.1141


       THE GLOBAL STRUCTURAL COORDINATE SYSTEM
       ---------------------------------------

       * PILE TOP DISPLACEMENTS *

      PILE GROUP   DISP. X,IN   DISP. Y,IN   DISP. Z,IN   ROT. X,RAD   ROT. Y,RAD
ROT. Z,RAD
      **********  ***********  ***********  ***********  ***********  ***********
***********
          1            0.1107   1.8501E-03  -2.2799E-03   4.6813E-07   7.7371E-05
7.8844E-05
          2            0.1177   1.8080E-03  -2.2799E-03   4.6813E-07   7.7371E-05
7.8844E-05
          3            0.1247   1.7658E-03  -2.2799E-03   4.6813E-07   7.7371E-05
7.8844E-05
          4            0.1316   1.7237E-03  -2.2799E-03   4.6813E-07   7.7371E-05
7.8844E-05
          5            0.1386   1.6815E-03  -2.2799E-03   4.6813E-07   7.7371E-05
7.8844E-05
          6            0.1060   1.8501E-03  -2.2518E-03   4.6813E-07   7.7371E-05
7.8844E-05
          7            0.1130   1.8080E-03  -2.2518E-03   4.6813E-07   7.7371E-05
7.8844E-05
          8            0.1199   1.7658E-03  -2.2518E-03   4.6813E-07   7.7371E-05
7.8844E-05
          9            0.1269   1.7237E-03  -2.2518E-03   4.6813E-07   7.7371E-05
7.8844E-05
         10            0.1339   1.6815E-03  -2.2518E-03   4.6813E-07   7.7371E-05
7.8844E-05
         11            0.1013   1.8501E-03  -2.2238E-03   4.6813E-07   7.7371E-05
7.8844E-05
         12            0.1082   1.8080E-03  -2.2238E-03   4.6813E-07   7.7371E-05
7.8844E-05
         13            0.1152   1.7658E-03  -2.2238E-03   4.6813E-07   7.7371E-05
7.8844E-05
         14            0.1222   1.7237E-03  -2.2238E-03   4.6813E-07   7.7371E-05
7.8844E-05
         15            0.1291   1.6815E-03  -2.2238E-03   4.6813E-07   7.7371E-05
7.8844E-05

       MINIMUM         0.1013   1.6815E-03  -2.2799E-03   4.6813E-07   7.7371E-05
7.8844E-05
       Pile N.         11            5            1            1            1
```

```
    1
       MAXIMUM         0.1386   1.8501E-03  -2.2238E-03   4.6813E-07   7.7371E-05
7.8844E-05
       Pile N.          5            1           11            1            1
    1

       * PILE TOP REACTIONS *

      PILE GROUP   FOR. X,KIP   FOR. Y,KIP   FOR. Z,KIP MOM X,KIP-IN MOM Y,KIP-IN
MOM Z,KIP-IN
      **********  ***********  ***********  ***********  ***********  ***********
***********
          1            135.49      -10.415      -1.6206       7.8252       50.184
   397.26
          2            143.26      -11.446      -1.5817       7.7090       49.487
   408.22
          3            151.02      -12.485      -1.5455       7.6000       48.832
   418.98
          4            158.92      -12.711      -1.5990       7.7617       49.803
   446.78
          5            166.70      -13.629      -1.5774       7.6970       49.415
   460.05
          6            130.00       2.9591      -4.7843     0.020974       153.12
   69.391
          7            137.43       2.9275      -4.7960     0.020974       153.28
   68.814
          8            144.86       2.8957      -4.8077     0.020974       153.44
   68.234
          9            152.29       3.0403      -5.1390     0.020974       159.45
   70.140
         10            159.73       3.0298      -5.1962     0.020974       160.43
   69.862
         11            125.17       12.316      -1.9089      -8.7945       56.244
  -200.71
         12            132.94       13.252      -1.8355      -8.5709       54.903
  -214.54
         13            140.71       14.204      -1.7698      -8.3694       53.693
  -228.07
         14            148.59       14.435      -1.8201      -8.5049       54.506
  -255.54
         15            156.38       15.285      -1.7778      -8.3744       53.723
  -271.20

       MINIMUM         125.17      -13.629      -5.1962      -8.7945       48.832
  -271.20
       Pile N.         11            5           10           11            3
   15
       MAXIMUM         166.70       15.285      -1.5455       7.8252       160.43
   460.05
       Pile N.          5           15            3            1           10
```

5

THE PILE COORDINATE SYSTEM (LOCAL AXES)
---

* PILE TOP DISPLACEMENTS *

PILE GROUP	DISP. x,IN	DISP. y,IN	DISP. z,IN	ROT. x,RAD	ROT. y,RAD	ROT. z,RAD
**********	**********	**********	**********	**********	**********	**********
1	0.1089	0.020026	-2.2799E-03	-1.2255E-05	7.6396E-05	7.8844E-05
2	0.1158	0.021129	-2.2799E-03	-1.2255E-05	7.6396E-05	7.8844E-05
3	0.1227	0.022232	-2.2799E-03	-1.2255E-05	7.6396E-05	7.8844E-05
4	0.1296	0.023335	-2.2799E-03	-1.2255E-05	7.6396E-05	7.8844E-05
5	0.1364	0.024438	-2.2799E-03	-1.2255E-05	7.6396E-05	7.8844E-05
6	0.1060	-2.2518E-03	-1.8501E-03	4.6813E-07	7.8844E-05	-7.7371E-05
7	0.1130	-2.2518E-03	-1.8080E-03	4.6813E-07	7.8844E-05	-7.7371E-05
8	0.1199	-2.2518E-03	-1.7658E-03	4.6813E-07	7.8844E-05	-7.7371E-05
9	0.1269	-2.2518E-03	-1.7237E-03	4.6813E-07	7.8844E-05	-7.7371E-05
10	0.1339	-2.2518E-03	-1.6815E-03	4.6813E-07	7.8844E-05	-7.7371E-05
11	0.1002	-0.014821	-2.2238E-03	1.3178E-05	7.6242E-05	7.8844E-05
12	0.1071	-0.016007	-2.2238E-03	1.3178E-05	7.6242E-05	7.8844E-05
13	0.1139	-0.017193	-2.2238E-03	1.3178E-05	7.6242E-05	7.8844E-05
14	0.1208	-0.018379	-2.2238E-03	1.3178E-05	7.6242E-05	7.8844E-05
15	0.1277	-0.019565	-2.2238E-03	1.3178E-05	7.6242E-05	7.8844E-05
MINIMUM	0.1002	-0.019565	-2.2799E-03	-1.2255E-05	7.6242E-05	-7.7371E-05
Pile N.	11	15	1	1	11	6
MAXIMUM	0.1364	0.024438	-1.6815E-03	1.3178E-05	7.8844E-05	7.8844E-05
Pile N.	5	5	10	11	6	

1

* PILE TOP REACTIONS *

PILE GROUP	AXIAL,KIP	LAT. y,KIP	LAT. z,KIP	MOM x,KIP-IN	MOM y,KIP-IN	MOM z,KIP-IN
**********	**********	**********	**********	**********	**********	**********
1	135.36	11.996	-1.6206	-0.5294	50.788	397.26
2	143.19	12.255	-1.5817	-0.5294	50.081	408.22
3	151.02	12.507	-1.5455	-0.5294	49.417	418.98
4	158.85	13.582	-1.5990	-0.5294	50.401	446.78
5	166.68	13.955	-1.5774	-0.5294	50.008	460.05
6	130.00	-4.7843	-2.9591	0.020974	69.391	-153.12
7	137.43	-4.7960	-2.9275	0.020974	68.814	-153.28
8	144.86	-4.8077	-2.8957	0.020974	68.234	-153.44
9	152.29	-5.1390	-3.0403	0.020974	70.140	-159.45
10	159.73	-5.1962	-3.0298	0.020974	69.862	-160.43
11	125.49	-8.4246	-1.9089	0.5693	56.925	-200.71
12	133.31	-8.7783	-1.8355	0.5693	55.565	-214.54
13	141.13	-9.1158	-1.7698	0.5693	54.338	-228.07
14	148.95	-10.184	-1.8201	0.5693	55.163	-255.54
15	156.76	-10.625	-1.7778	0.5693	54.369	-271.20
MINIMUM	125.49	-10.625	-3.0403	-0.5294	49.417	-271.20
Pile N.	11	15	9	1	3	15
MAXIMUM	166.68	13.955	-1.5455	0.5693	70.140	460.05
Pile N.	5	5	3	11	9	5

PILE GROUP	STRESS,KIP/IN**2
**********	**********

```
          1            7.4563
          2            7.7892
          3            8.1219
          4            8.5653
          5            8.9156
          6            6.3418
          7            6.5949
          8            6.8480
          9            7.1649
         10            7.4262
         11            6.1629
         12            6.4820
         13            6.8049
         14            7.2253
         15            7.5704

       MINIMUM         6.1629
       Pile N.         11
       MAXIMUM         8.9156
       Pile N.          5

       * EFFECTS FOR LATERALLY LOADED PILE *

       * MINIMUM VALUES AND LOCATIONS *

     PILE     DISPL.      DISPL.      MOMENT      MOMENT       SHEAR       SHEAR
SOIL REACT  SOIL REACT     TOTAL    FLEX. RIG.  FLEX. RIG.
               y-DIR       z-DIR       z-DIR       y-DIR       y-DIR       z-DIR
  y-DIR       z-DIR      STRESS       z-DIR       y-DIR
                IN          IN        KIP-IN      KIP-IN        KIP         KIP
 KIP/IN      KIP/IN     KIP/IN**2   KIP-IN**2   KIP-IN**2
    ******  **********  **********  **********  **********  **********  **********
**********  **********  **********  **********  **********
        1  -6.6549E-04 -2.8824E-03     -397.26     -4.1806     -0.8510     -1.5707
-9.2336E-03   -0.036128      4.7874  3.1594E+07  9.1843E+06
     x(FT)      16.720      1.5200      0.0000      9.1200      12.920      0.0000
   17.480      3.0400      62.320      0.0000      0.0000
        2  -7.0689E-04 -2.8920E-03     -408.22     -4.1866     -0.8836     -1.5331
-9.5165E-03   -0.035161      5.0643  3.1594E+07  9.1843E+06
     x(FT)      16.720      1.5200      0.0000      9.1200      12.920      0.0000
   17.480      3.0400      62.320      0.0000      0.0000
        3  -7.4618E-04 -2.9011E-03     -418.98     -4.1903     -0.9132     -1.4981
-9.8049E-03   -0.034256      5.3412  3.1594E+07  9.1843E+06
     x(FT)      16.720      1.5200      0.0000      9.1200      12.920      0.0000
   18.240      3.0400      62.320      0.0000      0.0000
        4  -7.7565E-04 -2.8874E-03     -446.78     -4.2202     -0.9807     -1.5485
-0.010574   -0.035563      5.6180  3.1594E+07  9.1843E+06
     x(FT)      16.720      1.5200      0.0000      9.1200      12.920      0.0000
   17.480      3.0400      62.320      0.0000      0.0000
        5  -8.1257E-04 -2.8927E-03     -460.05     -4.2284     -1.0148     -1.5276
```

```
-0.010900   -0.035021      5.8949  3.1594E+07  9.1843E+06
     x(FT)      16.720      1.5200      0.0000      9.1200      12.920      0.0000
   17.480      3.0400      62.320      0.0000      0.0000
        6  -2.9823E-03 -2.2676E-03     -11.641     -4.5692     -4.6733     -2.8700
  -0.1115   -0.078551      4.5977  3.1594E+07  9.1843E+06
     x(FT)      2.2800      1.5200      10.640      6.0800      0.0000      0.0000
   2.2800      1.5200      56.240      0.0000      0.0000
        7  -2.9814E-03 -2.2334E-03     -11.638     -4.4842     -4.6847     -2.8404
  -0.1118   -0.077677      4.8606  3.1594E+07  9.1843E+06
     x(FT)      2.2800      1.5200      10.640      6.0800      0.0000      0.0000
   2.2800      1.5200      56.240      0.0000      0.0000
        8  -2.9804E-03 -2.1992E-03     -11.635     -4.3991     -4.6961     -2.8106
  -0.1121   -0.076794      5.1234  3.1594E+07  9.1843E+06
     x(FT)      2.2800      1.5200      10.640      6.0800      0.0000      0.0000
   2.2800      1.5200      56.240      0.0000      0.0000
        9  -2.9437E-03 -2.1340E-03     -11.818     -4.5920     -5.0165     -2.9491
  -0.1212   -0.081828      5.3863  3.1594E+07  9.1843E+06
     x(FT)      1.5200      1.5200      9.8800      6.0800      0.0000      0.0000
   2.2800      1.5200      56.240      0.0000      0.0000
       10  -2.9399E-03 -2.0961E-03     -11.846     -4.5397     -5.0719     -2.9398
  -0.1228   -0.081670      5.6492  3.1594E+07  9.1843E+06
     x(FT)      1.5200      1.5200      9.8800      6.0800      0.0000      0.0000
   2.2800      1.5200      53.960      0.0000      0.0000
       11    -0.014821 -2.7360E-03     -54.906     -4.9675     -8.0632     -1.8576
  -0.1837   -0.044422      4.4385  3.1594E+07  9.1843E+06
     x(FT)      0.0000      1.5200      7.6000      7.6000      0.0000      0.0000
   3.0400      3.0400      60.800      0.0000      0.0000
       12    -0.016007 -2.7547E-03     -57.416     -4.8793     -8.4004     -1.7861
  -0.1900   -0.042494      4.7149  3.1594E+07  9.1843E+06
     x(FT)      0.0000      1.5200      7.6000      8.3600      0.0000      0.0000
   3.0400      3.0400      60.800      0.0000      0.0000
       13    -0.017193 -2.7716E-03     -59.895     -4.8291     -8.7219     -1.7221
  -0.1958   -0.040759      4.9914  3.1594E+07  9.1843E+06
     x(FT)      0.0000      1.5200      7.6000      8.3600      0.0000      0.0000
   3.0400      3.0400      61.560      0.0000      0.0000
       14    -0.018379 -2.7604E-03     -64.673     -4.8077     -9.7332     -1.7690
  -0.2187   -0.041985      5.2679  3.1594E+07  9.1843E+06
     x(FT)      0.0000      1.5200      7.6000      8.3600      0.0000      0.0000
   3.0400      3.0400      61.560      0.0000      0.0000
       15    -0.019565 -2.7714E-03     -67.979     -4.7831     -10.152     -1.7276
  -0.2268   -0.040853      5.5443  3.1594E+07  9.1843E+06
     x(FT)      0.0000      1.5200      8.3600      8.3600      0.0000      0.0000
   3.0400      3.0400      61.560      0.0000      0.0000

      Min.   -0.019565 -2.9011E-03     -460.05     -4.9675     -10.152     -2.9491
  -0.2268   -0.081828      4.4385  3.1594E+07  9.1843E+06
   Pile N.      15           3           5          11          15           9
   15           9          11           1           1

       * MAXIMUM VALUES AND LOCATIONS *
```

```
     PILE     DISPL.      DISPL.      MOMENT      MOMENT       SHEAR       SHEAR
SOIL REACT  SOIL REACT     TOTAL    FLEX. RIG.  FLEX. RIG.
               y-DIR       z-DIR       z-DIR       y-DIR       y-DIR       z-DIR
  y-DIR       z-DIR      STRESS       z-DIR       y-DIR
                IN          IN        KIP-IN      KIP-IN        KIP         KIP
 KIP/IN      KIP/IN     KIP/IN**2   KIP-IN**2   KIP-IN**2
    ******  **********  **********  **********  **********  **********  **********
**********  **********  **********  **********  **********
        1     0.020222  8.0795E-05      66.851      50.788      11.535    0.068523
   0.2394  1.0247E-03      7.4563  3.1594E+07  9.1843E+06
     x(FT)      0.7600      14.440      10.640      0.0000      0.0000      12.160
   3.0400      13.680      0.0000      0.0000      0.0000
        2     0.021311  8.3615E-05      70.161      50.081      11.780    0.068883
   0.2434  1.0134E-03      7.7892  3.1594E+07  9.1843E+06
     x(FT)      0.7600      14.440      10.640      0.0000      0.0000      12.160
   3.0400      14.440      0.0000      0.0000      0.0000
        3     0.022399  8.6187E-05      73.391      49.417      12.018    0.069132
   0.2473  1.0063E-03      8.1219  3.1594E+07  9.1843E+06
     x(FT)      0.7600      14.440      10.640      0.0000      0.0000      12.160
   3.0400      14.440      0.0000      0.0000      0.0000
        4     0.023466  8.3544E-05      77.315      50.401      13.035    0.069113
   0.2703  1.0255E-03      8.5653  3.1594E+07  9.1843E+06
     x(FT)      0.7600      14.440      10.640      0.0000      0.0000      12.160
   3.0400      13.680      0.0000      0.0000      0.0000
        5     0.024551  8.5204E-05      80.631      50.008      13.387    0.069322
   0.2770  1.0206E-03      8.9156  3.1594E+07  9.1843E+06
     x(FT)      0.7600      14.440      10.640      0.0000      0.0000      12.160
   3.0400      14.440      0.0000      0.0000      0.0000
        6   5.3516E-05  4.7326E-05      153.12      69.391      0.1673    0.069150
2.6698E-03  1.4701E-03      6.3418  3.1594E+07  9.1843E+06
     x(FT)      16.720      12.160      0.0000      0.0000      14.440      9.8800
   15.960      13.680      0.0000      0.0000      0.0000
        7   5.3496E-05  4.6341E-05      153.28      68.814      0.1673    0.068068
2.6731E-03  1.4541E-03      6.5949  3.1594E+07  9.1843E+06
     x(FT)      16.720      12.160      0.0000      0.0000      14.440      9.8800
   15.960      13.680      0.0000      0.0000      0.0000
        8   5.3476E-05  4.5355E-05      153.44      68.234      0.1674    0.066984
2.6764E-03  1.4380E-03      6.8480  3.1594E+07  9.1843E+06
     x(FT)      16.720      12.160      0.0000      0.0000      14.440      9.8800
   15.960      13.680      0.0000      0.0000      0.0000
        9   5.0208E-05  4.7740E-05      159.45      70.140      0.1719    0.069551
2.8872E-03  1.4451E-03      7.1649  3.1594E+07  9.1843E+06
     x(FT)      16.720      11.400      0.0000      0.0000      13.680      9.8800
   15.960      13.680      0.0000      0.0000      0.0000
       10   4.9683E-05  4.7262E-05      160.43      69.862      0.1727    0.068875
2.9135E-03  1.4306E-03      7.4262  3.1594E+07  9.1843E+06
     x(FT)      16.720      11.400      0.0000      0.0000      13.680      9.8800
   15.960      13.680      0.0000      0.0000      0.0000
       11   5.8053E-04  1.0731E-04      200.71      56.925      0.6926    0.086513
```

```
7.2082E-03  1.2641E-03      6.1629  3.1594E+07  9.1843E+06
     x(FT)      13.680      12.920      0.0000      0.0000      10.640      9.8800
   15.200      12.920      0.0000      0.0000      0.0000
       12   6.0830E-04  1.0634E-04      214.54      55.565      0.7070    0.083036
7.3684E-03  1.2053E-03      6.4820  3.1594E+07  9.1843E+06
     x(FT)      14.440      12.920      0.0000      0.0000      10.640      10.640
   15.200      12.920      0.0000      0.0000      0.0000
       13   6.4181E-04  1.0604E-04      228.07      54.338      0.7321    0.081489
7.5912E-03  1.1589E-03      6.8049  3.1594E+07  9.1843E+06
     x(FT)      14.440      12.920      0.0000      0.0000      11.400      10.640
   15.960      12.920      0.0000      0.0000      0.0000
       14   6.8001E-04  1.0266E-04      255.54      55.163      0.8023    0.082144
8.4075E-03  1.1923E-03      7.2253  3.1594E+07  9.1843E+06
     x(FT)      14.440      12.920      0.0000      0.0000      11.400      10.640
   15.200      12.920      0.0000      0.0000      0.0000
       15   7.2369E-04  1.0350E-04      271.20      54.369      0.8470    0.081984
8.8343E-03  1.1778E-03      7.5704  3.1594E+07  9.1843E+06
     x(FT)      14.440      12.920      0.0000      0.0000      11.400      10.640
   15.960      12.920      0.0000      0.0000      0.0000

      Max.    0.024551  1.0731E-04      271.20      70.140      13.387    0.086513
   0.2770  1.4701E-03      8.9156  3.1594E+07  9.1843E+06
   Pile N.       5          11          15           9           5          11
    5           6           5           1           1


     LOAD CASE :     8
     CASE NAME : STR III-L2

     LOAD TYPE : Dead, DL

       REDUCTION FACTORS FOR CLOSELY-SPACED PILE GROUPS, COMBINED Y AND Z DIRECTIONS
       ESTIMATED USING MOVEMENT IN THE DIRECTION OF PILE CAP DISPLACEMENTS

            GROUP NO     P-FACTOR     Y-FACTOR

                1           0.8697       1.0000
                2           0.8697       1.0000
                3           0.8697       1.0000
                4           0.9455       1.0000
                5           0.9562       1.0000
                6           0.8369       1.0000
                7           0.8369       1.0000
                8           0.8369       1.0000
                9           0.9154       1.0000
               10           0.9265       1.0000
               11           0.8089       1.0000
               12           0.8089       1.0000
               13           0.8089       1.0000
```

```
          14          0.8898       1.0000
          15          0.9013       1.0000


     * TABLE L *   COMPUTATION ON PILE CAP


     * EQUIVALENT CONCENTRATED LOAD AT ORIGIN *


          VERT. LOAD,KIPS    HOR. LOAD Y,KIPS   HOR. LOAD Z,KIPS
                2183.55            29.1900           -44.5700

         MOMENT X ,KIP-IN    MOMENT Y,KIP-IN    MOMENT Z,KIP-IN
                0.00000            22034.8            4350.02


     * DISPLACEMENT OF GROUPED PILE FOUNDATION AT ORIGIN *


           VERTICAL ,IN      HORIZONTAL Y,IN     HORIZONTAL Z,IN
                0.11994        1.76581E-03       -2.25184E-03

         ANGLE ROT. X,RAD    ANGLE ROT. Y,RAD    ANGLE ROT. Z,RAD
            4.68127E-07        7.73709E-05        7.88437E-05


     * PASSIVE RESISTANCE IN PILE CAP *

            HOR. LOAD Y,KIP    HOR. LOAD Z,KIP      POSITION, FT      EQ. DIAM, FT
                1.91241            3.27052           -1.55556           35.1141


       THE GLOBAL STRUCTURAL COORDINATE SYSTEM
       ---------------------------------------

       * PILE TOP DISPLACEMENTS *

      PILE GROUP   DISP. X,IN   DISP. Y,IN   DISP. Z,IN   ROT. X,RAD   ROT. Y,RAD
ROT. Z,RAD
      **********  ***********  ***********  ***********  ***********  ***********
***********
          1            0.1107   1.8501E-03  -2.2799E-03   4.6813E-07   7.7371E-05
7.8844E-05
          2            0.1177   1.8080E-03  -2.2799E-03   4.6813E-07   7.7371E-05
7.8844E-05
          3            0.1247   1.7658E-03  -2.2799E-03   4.6813E-07   7.7371E-05
7.8844E-05
          4            0.1316   1.7237E-03  -2.2799E-03   4.6813E-07   7.7371E-05
```

```
7.8844E-05
          5            0.1386   1.6815E-03  -2.2799E-03   4.6813E-07   7.7371E-05
7.8844E-05
          6            0.1060   1.8501E-03  -2.2518E-03   4.6813E-07   7.7371E-05
7.8844E-05
          7            0.1130   1.8080E-03  -2.2518E-03   4.6813E-07   7.7371E-05
7.8844E-05
          8            0.1199   1.7658E-03  -2.2518E-03   4.6813E-07   7.7371E-05
7.8844E-05
          9            0.1269   1.7237E-03  -2.2518E-03   4.6813E-07   7.7371E-05
7.8844E-05
         10            0.1339   1.6815E-03  -2.2518E-03   4.6813E-07   7.7371E-05
7.8844E-05
         11            0.1013   1.8501E-03  -2.2238E-03   4.6813E-07   7.7371E-05
7.8844E-05
         12            0.1082   1.8080E-03  -2.2238E-03   4.6813E-07   7.7371E-05
7.8844E-05
         13            0.1152   1.7658E-03  -2.2238E-03   4.6813E-07   7.7371E-05
7.8844E-05
         14            0.1222   1.7237E-03  -2.2238E-03   4.6813E-07   7.7371E-05
7.8844E-05
         15            0.1291   1.6815E-03  -2.2238E-03   4.6813E-07   7.7371E-05
7.8844E-05

       MINIMUM         0.1013   1.6815E-03  -2.2799E-03   4.6813E-07   7.7371E-05
7.8844E-05
       Pile N.         11            5            1            1            1
    1
       MAXIMUM         0.1386   1.8501E-03  -2.2238E-03   4.6813E-07   7.7371E-05
7.8844E-05
       Pile N.          5            1           11            1            1
    1

       * PILE TOP REACTIONS *

      PILE GROUP   FOR. X,KIP   FOR. Y,KIP   FOR. Z,KIP MOM X,KIP-IN MOM Y,KIP-IN
MOM Z,KIP-IN
      **********  ***********  ***********  ***********  ***********  ***********
***********
          1            135.49      -10.415      -1.6206       7.8252       50.184
   397.26
          2            143.26      -11.446      -1.5817       7.7090       49.487
   408.22
          3            151.02      -12.485      -1.5455       7.6000       48.832
   418.98
          4            158.92      -12.711      -1.5990       7.7617       49.803
   446.78
          5            166.70      -13.629      -1.5774       7.6970       49.415
   460.05
          6            130.00       2.9591      -4.7843     0.020974       153.12
```

```
  69.391
         7            137.43       2.9275      -4.7960     0.020974       153.28
  68.814
         8            144.86       2.8957      -4.8077     0.020974       153.44
  68.234
         9            152.29       3.0403      -5.1390     0.020974       159.45
  70.140
        10            159.73       3.0298      -5.1962     0.020974       160.43
  69.862
        11            125.17       12.316      -1.9089      -8.7945       56.244
 -200.71
        12            132.94       13.252      -1.8355      -8.5709       54.903
 -214.54
        13            140.71       14.204      -1.7698      -8.3694       53.693
 -228.07
        14            148.59       14.435      -1.8201      -8.5049       54.506
 -255.54
        15            156.38       15.285      -1.7778      -8.3744       53.723
 -271.20

      MINIMUM         125.17      -13.629      -5.1962      -8.7945       48.832
 -271.20
      Pile N.         11            5           10           11            3
  15
      MAXIMUM         166.70       15.285      -1.5455       7.8252       160.43
  460.05
      Pile N.          5           15            3            1           10
   5


      THE PILE COORDINATE SYSTEM (LOCAL AXES)
      ---------------------------------------

      * PILE TOP DISPLACEMENTS *

     PILE GROUP   DISP. x,IN   DISP. y,IN   DISP. z,IN   ROT. x,RAD   ROT. y,RAD
ROT. z,RAD
     **********  ***********  ***********  ***********  ***********  ***********
***********
         1            0.1089     0.020026  -2.2799E-03  -1.2255E-05   7.6396E-05
7.8844E-05
         2            0.1158     0.021129  -2.2799E-03  -1.2255E-05   7.6396E-05
7.8844E-05
         3            0.1227     0.022232  -2.2799E-03  -1.2255E-05   7.6396E-05
7.8844E-05
         4            0.1296     0.023335  -2.2799E-03  -1.2255E-05   7.6396E-05
7.8844E-05
         5            0.1364     0.024438  -2.2799E-03  -1.2255E-05   7.6396E-05
7.8844E-05
         6            0.1060  -2.2518E-03  -1.8501E-03   4.6813E-07   7.8844E-05
```

```
-7.7371E-05
          7            0.1130  -2.2518E-03  -1.8080E-03   4.6813E-07   7.8844E-05
-7.7371E-05
          8            0.1199  -2.2518E-03  -1.7658E-03   4.6813E-07   7.8844E-05
-7.7371E-05
          9            0.1269  -2.2518E-03  -1.7237E-03   4.6813E-07   7.8844E-05
-7.7371E-05
         10            0.1339  -2.2518E-03  -1.6815E-03   4.6813E-07   7.8844E-05
-7.7371E-05
         11            0.1002    -0.014821  -2.2238E-03   1.3178E-05   7.6242E-05
7.8844E-05
         12            0.1071    -0.016007  -2.2238E-03   1.3178E-05   7.6242E-05
7.8844E-05
         13            0.1139    -0.017193  -2.2238E-03   1.3178E-05   7.6242E-05
7.8844E-05
         14            0.1208    -0.018379  -2.2238E-03   1.3178E-05   7.6242E-05
7.8844E-05
         15            0.1277    -0.019565  -2.2238E-03   1.3178E-05   7.6242E-05
7.8844E-05

       MINIMUM         0.1002    -0.019565  -2.2799E-03  -1.2255E-05   7.6242E-05
-7.7371E-05
       Pile N.         11           15            1            1           11
    6
       MAXIMUM         0.1364     0.024438  -1.6815E-03   1.3178E-05   7.8844E-05
7.8844E-05
       Pile N.          5            5           10           11            6
    1

       * PILE TOP REACTIONS *

      PILE GROUP   AXIAL,KIP    LAT. y,KIP   LAT. z,KIP MOM x,KIP-IN MOM y,KIP-IN
MOM z,KIP-IN
      **********  ***********  ***********  ***********  ***********  ***********
***********
          1            135.36       11.996      -1.6206      -0.5294       50.788
   397.26
          2            143.19       12.255      -1.5817      -0.5294       50.081
   408.22
          3            151.02       12.507      -1.5455      -0.5294       49.417
   418.98
          4            158.85       13.582      -1.5990      -0.5294       50.401
   446.78
          5            166.68       13.955      -1.5774      -0.5294       50.008
   460.05
          6            130.00      -4.7843      -2.9591     0.020974       69.391
  -153.12
          7            137.43      -4.7960      -2.9275     0.020974       68.814
  -153.28
          8            144.86      -4.8077      -2.8957     0.020974       68.234
```

```
-153.44
        9            152.29      -5.1390      -3.0403     0.020974       70.140
-159.45
       10            159.73      -5.1962      -3.0298     0.020974       69.862
-160.43
       11            125.49      -8.4246      -1.9089       0.5693       56.925
-200.71
       12            133.31      -8.7783      -1.8355       0.5693       55.565
-214.54
       13            141.13      -9.1158      -1.7698       0.5693       54.338
-228.07
       14            148.95      -10.184      -1.8201       0.5693       55.163
-255.54
       15            156.76      -10.625      -1.7778       0.5693       54.369
-271.20

     MINIMUM         125.49      -10.625      -3.0403      -0.5294       49.417
-271.20
     Pile N.         11           15            9            1            3
 15
     MAXIMUM         166.68       13.955      -1.5455       0.5693       70.140
 460.05
     Pile N.          5            5            3           11            9
  5

    PILE GROUP   STRESS,KIP/IN**2
    **********  ****************
        1            7.4563
        2            7.7892
        3            8.1219
        4            8.5653
        5            8.9156
        6            6.3418
        7            6.5949
        8            6.8480
        9            7.1649
       10            7.4262
       11            6.1629
       12            6.4820
       13            6.8049
       14            7.2253
       15            7.5704

     MINIMUM         6.1629
     Pile N.         11
     MAXIMUM         8.9156
     Pile N.          5

     * EFFECTS FOR LATERALLY LOADED PILE *
```

```
      * MINIMUM VALUES AND LOCATIONS *

     PILE     DISPL.      DISPL.      MOMENT      MOMENT       SHEAR       SHEAR
SOIL REACT  SOIL REACT     TOTAL    FLEX. RIG.  FLEX. RIG.
               y-DIR       z-DIR       z-DIR       y-DIR       y-DIR       z-DIR
  y-DIR       z-DIR      STRESS       z-DIR       y-DIR
               IN          IN        KIP-IN      KIP-IN        KIP         KIP
 KIP/IN      KIP/IN     KIP/IN**2   KIP-IN**2   KIP-IN**2
    ******  **********  **********  **********  **********  **********  **********
**********  **********  **********  **********  **********
        1  -6.6549E-04 -2.8824E-03     -397.26     -4.1806     -0.8510     -1.5707
-9.2336E-03   -0.036128      4.7874  3.1594E+07  9.1843E+06
     x(FT)      16.720      1.5200      0.0000      9.1200      12.920      0.0000
   17.480      3.0400      62.320      0.0000      0.0000
        2  -7.0689E-04 -2.8920E-03     -408.22     -4.1866     -0.8836     -1.5331
-9.5165E-03   -0.035161      5.0643  3.1594E+07  9.1843E+06
     x(FT)      16.720      1.5200      0.0000      9.1200      12.920      0.0000
   17.480      3.0400      62.320      0.0000      0.0000
        3  -7.4618E-04 -2.9011E-03     -418.98     -4.1903     -0.9132     -1.4981
-9.8049E-03   -0.034256      5.3412  3.1594E+07  9.1843E+06
     x(FT)      16.720      1.5200      0.0000      9.1200      12.920      0.0000
   18.240      3.0400      62.320      0.0000      0.0000
        4  -7.7565E-04 -2.8874E-03     -446.78     -4.2202     -0.9807     -1.5485
-0.010574   -0.035563      5.6180  3.1594E+07  9.1843E+06
     x(FT)      16.720      1.5200      0.0000      9.1200      12.920      0.0000
   17.480      3.0400      62.320      0.0000      0.0000
        5  -8.1257E-04 -2.8927E-03     -460.05     -4.2284     -1.0148     -1.5276
-0.010900   -0.035021      5.8949  3.1594E+07  9.1843E+06
     x(FT)      16.720      1.5200      0.0000      9.1200      12.920      0.0000
   17.480      3.0400      62.320      0.0000      0.0000
        6  -2.9823E-03 -2.2676E-03     -11.641     -4.5692     -4.6733     -2.8700
  -0.1115   -0.078551      4.5977  3.1594E+07  9.1843E+06
     x(FT)      2.2800      1.5200      10.640      6.0800      0.0000      0.0000
   2.2800      1.5200      56.240      0.0000      0.0000
        7  -2.9814E-03 -2.2334E-03     -11.638     -4.4842     -4.6847     -2.8404
  -0.1118   -0.077677      4.8606  3.1594E+07  9.1843E+06
     x(FT)      2.2800      1.5200      10.640      6.0800      0.0000      0.0000
   2.2800      1.5200      56.240      0.0000      0.0000
        8  -2.9804E-03 -2.1992E-03     -11.635     -4.3991     -4.6961     -2.8106
  -0.1121   -0.076794      5.1234  3.1594E+07  9.1843E+06
     x(FT)      2.2800      1.5200      10.640      6.0800      0.0000      0.0000
   2.2800      1.5200      56.240      0.0000      0.0000
        9  -2.9437E-03 -2.1340E-03     -11.818     -4.5920     -5.0165     -2.9491
  -0.1212   -0.081828      5.3863  3.1594E+07  9.1843E+06
     x(FT)      1.5200      1.5200      9.8800      6.0800      0.0000      0.0000
   2.2800      1.5200      56.240      0.0000      0.0000
       10  -2.9399E-03 -2.0961E-03     -11.846     -4.5397     -5.0719     -2.9398
  -0.1228   -0.081670      5.6492  3.1594E+07  9.1843E+06
     x(FT)      1.5200      1.5200      9.8800      6.0800      0.0000      0.0000
   2.2800      1.5200      53.960      0.0000      0.0000
```

```
      11    -0.014821 -2.7360E-03     -54.906     -4.9675     -8.0632     -1.8576
  -0.1837   -0.044422      4.4385  3.1594E+07  9.1843E+06
     x(FT)      0.0000      1.5200      7.6000      7.6000      0.0000      0.0000
   3.0400      3.0400      60.800      0.0000      0.0000
      12    -0.016007 -2.7547E-03     -57.416     -4.8793     -8.4004     -1.7861
  -0.1900   -0.042494      4.7149  3.1594E+07  9.1843E+06
     x(FT)      0.0000      1.5200      7.6000      8.3600      0.0000      0.0000
   3.0400      3.0400      60.800      0.0000      0.0000
      13    -0.017193 -2.7716E-03     -59.895     -4.8291     -8.7219     -1.7221
  -0.1958   -0.040759      4.9914  3.1594E+07  9.1843E+06
     x(FT)      0.0000      1.5200      7.6000      8.3600      0.0000      0.0000
   3.0400      3.0400      61.560      0.0000      0.0000
      14    -0.018379 -2.7604E-03     -64.673     -4.8077     -9.7332     -1.7690
  -0.2187   -0.041985      5.2679  3.1594E+07  9.1843E+06
     x(FT)      0.0000      1.5200      7.6000      8.3600      0.0000      0.0000
   3.0400      3.0400      61.560      0.0000      0.0000
      15    -0.019565 -2.7714E-03     -67.979     -4.7831     -10.152     -1.7276
  -0.2268   -0.040853      5.5443  3.1594E+07  9.1843E+06
     x(FT)      0.0000      1.5200      8.3600      8.3600      0.0000      0.0000
   3.0400      3.0400      61.560      0.0000      0.0000

     Min.    -0.019565 -2.9011E-03     -460.05     -4.9675     -10.152     -2.9491
  -0.2268   -0.081828      4.4385  3.1594E+07  9.1843E+06
   Pile N.      15           3           5          11          15           9
   15           9          11           1           1

      * MAXIMUM VALUES AND LOCATIONS *

     PILE     DISPL.      DISPL.      MOMENT      MOMENT       SHEAR       SHEAR
SOIL REACT  SOIL REACT     TOTAL    FLEX. RIG.  FLEX. RIG.
               y-DIR       z-DIR       z-DIR       y-DIR       y-DIR       z-DIR
  y-DIR       z-DIR      STRESS       z-DIR       y-DIR
               IN          IN        KIP-IN      KIP-IN        KIP         KIP
 KIP/IN      KIP/IN     KIP/IN**2   KIP-IN**2   KIP-IN**2
    ******  **********  **********  **********  **********  **********  **********
**********  **********  **********  **********  **********
        1     0.020222  8.0795E-05      66.851      50.788      11.535    0.068523
   0.2394  1.0247E-03      7.4563  3.1594E+07  9.1843E+06
     x(FT)      0.7600      14.440      10.640      0.0000      0.0000      12.160
   3.0400      13.680      0.0000      0.0000      0.0000
        2     0.021311  8.3615E-05      70.161      50.081      11.780    0.068883
   0.2434  1.0134E-03      7.7892  3.1594E+07  9.1843E+06
     x(FT)      0.7600      14.440      10.640      0.0000      0.0000      12.160
   3.0400      14.440      0.0000      0.0000      0.0000
        3     0.022399  8.6187E-05      73.391      49.417      12.018    0.069132
   0.2473  1.0063E-03      8.1219  3.1594E+07  9.1843E+06
     x(FT)      0.7600      14.440      10.640      0.0000      0.0000      12.160
   3.0400      14.440      0.0000      0.0000      0.0000
        4     0.023466  8.3544E-05      77.315      50.401      13.035    0.069113
   0.2703  1.0255E-03      8.5653  3.1594E+07  9.1843E+06
```

```
     x(FT)      0.7600      14.440      10.640      0.0000      0.0000      12.160
   3.0400      13.680      0.0000      0.0000      0.0000
        5     0.024551  8.5204E-05      80.631      50.008      13.387    0.069322
   0.2770  1.0206E-03      8.9156  3.1594E+07  9.1843E+06
     x(FT)      0.7600      14.440      10.640      0.0000      0.0000      12.160
   3.0400      14.440      0.0000      0.0000      0.0000
        6   5.3516E-05  4.7326E-05      153.12      69.391      0.1673    0.069150
2.6698E-03  1.4701E-03      6.3418  3.1594E+07  9.1843E+06
     x(FT)      16.720      12.160      0.0000      0.0000      14.440      9.8800
   15.960      13.680      0.0000      0.0000      0.0000
        7   5.3496E-05  4.6341E-05      153.28      68.814      0.1673    0.068068
2.6731E-03  1.4541E-03      6.5949  3.1594E+07  9.1843E+06
     x(FT)      16.720      12.160      0.0000      0.0000      14.440      9.8800
   15.960      13.680      0.0000      0.0000      0.0000
        8   5.3476E-05  4.5355E-05      153.44      68.234      0.1674    0.066984
2.6764E-03  1.4380E-03      6.8480  3.1594E+07  9.1843E+06
     x(FT)      16.720      12.160      0.0000      0.0000      14.440      9.8800
   15.960      13.680      0.0000      0.0000      0.0000
        9   5.0208E-05  4.7740E-05      159.45      70.140      0.1719    0.069551
2.8872E-03  1.4451E-03      7.1649  3.1594E+07  9.1843E+06
     x(FT)      16.720      11.400      0.0000      0.0000      13.680      9.8800
   15.960      13.680      0.0000      0.0000      0.0000
       10   4.9683E-05  4.7262E-05      160.43      69.862      0.1727    0.068875
2.9135E-03  1.4306E-03      7.4262  3.1594E+07  9.1843E+06
     x(FT)      16.720      11.400      0.0000      0.0000      13.680      9.8800
   15.960      13.680      0.0000      0.0000      0.0000
       11   5.8053E-04  1.0731E-04      200.71      56.925      0.6926    0.086513
7.2082E-03  1.2641E-03      6.1629  3.1594E+07  9.1843E+06
     x(FT)      13.680      12.920      0.0000      0.0000      10.640      9.8800
   15.200      12.920      0.0000      0.0000      0.0000
       12   6.0830E-04  1.0634E-04      214.54      55.565      0.7070    0.083036
7.3684E-03  1.2053E-03      6.4820  3.1594E+07  9.1843E+06
     x(FT)      14.440      12.920      0.0000      0.0000      10.640      10.640
   15.200      12.920      0.0000      0.0000      0.0000
       13   6.4181E-04  1.0604E-04      228.07      54.338      0.7321    0.081489
7.5912E-03  1.1589E-03      6.8049  3.1594E+07  9.1843E+06
     x(FT)      14.440      12.920      0.0000      0.0000      11.400      10.640
   15.960      12.920      0.0000      0.0000      0.0000
       14   6.8001E-04  1.0266E-04      255.54      55.163      0.8023    0.082144
8.4075E-03  1.1923E-03      7.2253  3.1594E+07  9.1843E+06
     x(FT)      14.440      12.920      0.0000      0.0000      11.400      10.640
   15.200      12.920      0.0000      0.0000      0.0000
       15   7.2369E-04  1.0350E-04      271.20      54.369      0.8470    0.081984
8.8343E-03  1.1778E-03      7.5704  3.1594E+07  9.1843E+06
     x(FT)      14.440      12.920      0.0000      0.0000      11.400      10.640
   15.960      12.920      0.0000      0.0000      0.0000

      Max.    0.024551  1.0731E-04      271.20      70.140      13.387    0.086513
   0.2770  1.4701E-03      8.9156  3.1594E+07  9.1843E+06
   Pile N.       5          11          15           9           5          11
```

5 6 5 1 1

LOAD CASE : 9
CASE NAME : STR IV-L1

LOAD TYPE : Dead, DL

REDUCTION FACTORS FOR CLOSELY-SPACED PILE GROUPS, COMBINED Y AND Z DIRECTIONS
ESTIMATED USING MOVEMENT IN THE DIRECTION OF PILE CAP DISPLACEMENTS

GROUP NO	P-FACTOR	Y-FACTOR
1	0.8600	1.0000
2	0.8600	1.0000
3	0.8600	1.0000
4	0.8600	1.0000
5	0.8600	1.0000
6	0.7210	1.0000
7	0.7210	1.0000
8	0.7210	1.0000
9	0.7210	1.0000
10	0.7210	1.0000
11	0.5820	1.0000
12	0.5820	1.0000
13	0.5820	1.0000
14	0.5820	1.0000
15	0.5820	1.0000

* TABLE L * COMPUTATION ON PILE CAP

* EQUIVALENT CONCENTRATED LOAD AT ORIGIN *

VERT. LOAD,KIPS	HOR. LOAD Y,KIPS	HOR. LOAD Z,KIPS
2701.98	30.9100	0.00000

MOMENT X ,KIP-IN	MOMENT Y,KIP-IN	MOMENT Z,KIP-IN
0.00000	0.00000	8261.37

* DISPLACEMENT OF GROUPED PILE FOUNDATION AT ORIGIN *

VERTICAL ,IN	HORIZONTAL Y,IN	HORIZONTAL Z,IN
0.15155	-1.19633E-03	-7.42048E-19

ANGLE ROT. X,RAD	ANGLE ROT. Y,RAD	ANGLE ROT. Z,RAD
6.84141E-21	-1.61158E-20	1.53492E-04

* PASSIVE RESISTANCE IN PILE CAP *

HOR. LOAD Y,KIP	HOR. LOAD Z,KIP	POSITION, FT	EQ. DIAM, FT
6.63967	7.00294E-14	-1.55556	35.1141

THE GLOBAL STRUCTURAL COORDINATE SYSTEM
---

* PILE TOP DISPLACEMENTS *

PILE GROUP	DISP. X,IN	DISP. Y,IN	DISP. Z,IN	ROT. X,RAD	ROT. Y,RAD	ROT. Z,RAD
**********	**********	**********	**********	**********	**********	**********
1	0.1608	-1.1963E-03	-1.1525E-18	6.8414E-21	-1.6116E-20	1.5349E-04
2	0.1608	-1.1963E-03	-1.1525E-18	6.8414E-21	-1.6116E-20	1.5349E-04
3	0.1608	-1.1963E-03	-1.1525E-18	6.8414E-21	-1.6116E-20	1.5349E-04
4	0.1608	-1.1963E-03	-1.1525E-18	6.8414E-21	-1.6116E-20	1.5349E-04
5	0.1608	-1.1963E-03	-1.1525E-18	6.8414E-21	-1.6116E-20	1.5349E-04
6	0.1515	-1.1963E-03	-7.4205E-19	6.8414E-21	-1.6116E-20	1.5349E-04
7	0.1515	-1.1963E-03	-7.4205E-19	6.8414E-21	-1.6116E-20	1.5349E-04
8	0.1515	-1.1963E-03	-7.4205E-19	6.8414E-21	-1.6116E-20	1.5349E-04
9	0.1515	-1.1963E-03	-7.4205E-19	6.8414E-21	-1.6116E-20	1.5349E-04
10	0.1515	-1.1963E-03	-7.4205E-19	6.8414E-21	-1.6116E-20	1.5349E-04
11	0.1423	-1.1963E-03	-3.3156E-19	6.8414E-21	-1.6116E-20	1.5349E-04
12	0.1423	-1.1963E-03	-3.3156E-19	6.8414E-21	-1.6116E-20	1.5349E-04
13	0.1423	-1.1963E-03	-3.3156E-19	6.8414E-21	-1.6116E-20	1.5349E-04
14	0.1423	-1.1963E-03	-3.3156E-19	6.8414E-21	-1.6116E-20	1.5349E-04
15	0.1423	-1.1963E-03	-3.3156E-19	6.8414E-21	-1.6116E-20	1.5349E-04

```
      MINIMUM         0.1423  -1.1963E-03  -1.1525E-18   6.8414E-21  -1.6116E-20
1.5349E-04
      Pile N.         11            1            1            1            1
    1
      MAXIMUM         0.1608  -1.1963E-03  -3.3156E-19   6.8414E-21  -1.6116E-20
1.5349E-04
      Pile N.          1            1           11            1            1
    1

      * PILE TOP REACTIONS *

     PILE GROUP   FOR. X,KIP   FOR. Y,KIP   FOR. Z,KIP MOM X,KIP-IN MOM Y,KIP-IN
MOM Z,KIP-IN
     **********  ***********  ***********  ***********  ***********  ***********
***********
         1            191.75      -18.049  -2.8223E-16   1.0362E-15   3.7489E-15
   501.77
         2            191.75      -18.049  -2.8223E-16   1.0362E-15   3.7489E-15
   501.77
         3            191.75      -18.049  -2.8223E-16   1.0362E-15   3.7489E-15
   501.77
         4            191.75      -18.049  -2.8223E-16   1.0362E-15   3.7489E-15
   501.77
         5            191.75      -18.049  -2.8223E-16   1.0362E-15   3.7489E-15
   501.77
         6            178.60       1.4048  -5.4539E-14  -3.3421E-15   7.2499E-13
   66.463
         7            178.60       1.4048  -5.4539E-14  -3.3421E-15   7.2499E-13
   66.463
         8            178.60       1.4048  -5.4539E-14  -3.3421E-15   7.2499E-13
   66.463
         9            178.60       1.4048  -5.4539E-14  -3.3421E-15   7.2499E-13
   66.463
        10            178.60       1.4048  -5.4539E-14  -3.3421E-15   7.2499E-13
   66.463
        11            170.05       20.205   2.9965E-17   7.9757E-16  -3.7090E-15
  -208.36
        12            170.05       20.205   2.9965E-17   7.9757E-16  -3.7090E-15
  -208.36
        13            170.05       20.205   2.9965E-17   7.9757E-16  -3.7090E-15
  -208.36
        14            170.05       20.205   2.9965E-17   7.9757E-16  -3.7090E-15
  -208.36
        15            170.05       20.205   2.9965E-17   7.9757E-16  -3.7090E-15
  -208.36

      MINIMUM         170.05      -18.049  -5.4539E-14  -3.3421E-15  -3.7090E-15
  -208.36
      Pile N.         11            1            6            6           11
```

```
   11
       MAXIMUM         191.75       20.205   2.9965E-17   1.0362E-15   7.2499E-13
   501.77
       Pile N.          1           11           11            1            6
    1


       THE PILE COORDINATE SYSTEM (LOCAL AXES)
       ---------------------------------------

       * PILE TOP DISPLACEMENTS *

      PILE GROUP   DISP. x,IN   DISP. y,IN   DISP. z,IN   ROT. x,RAD   ROT. y,RAD
ROT. z,RAD
      **********  ***********  ***********  ***********  ***********  ***********
***********
          1            0.1588     0.025242  -1.1525E-18   9.3971E-21  -1.4772E-20
1.5349E-04
          2            0.1588     0.025242  -1.1525E-18   9.3971E-21  -1.4772E-20
1.5349E-04
          3            0.1588     0.025242  -1.1525E-18   9.3971E-21  -1.4772E-20
1.5349E-04
          4            0.1588     0.025242  -1.1525E-18   9.3971E-21  -1.4772E-20
1.5349E-04
          5            0.1588     0.025242  -1.1525E-18   9.3971E-21  -1.4772E-20
1.5349E-04
          6            0.1515  -1.0095E-17   1.1963E-03   1.6240E-20   1.5349E-04
2.5514E-20
          7            0.1515  -1.0095E-17   1.1963E-03   1.6240E-20   1.5349E-04
2.5514E-20
          8            0.1515  -1.0095E-17   1.1963E-03   1.6240E-20   1.5349E-04
2.5514E-20
          9            0.1515  -1.0095E-17   1.1963E-03   1.6240E-20   1.5349E-04
2.5514E-20
         10            0.1515  -1.0095E-17   1.1963E-03   1.6240E-20   1.5349E-04
2.5514E-20
         11            0.1402    -0.024574  -3.3156E-19   4.0996E-21  -1.7021E-20
1.5349E-04
         12            0.1402    -0.024574  -3.3156E-19   4.0996E-21  -1.7021E-20
1.5349E-04
         13            0.1402    -0.024574  -3.3156E-19   4.0996E-21  -1.7021E-20
1.5349E-04
         14            0.1402    -0.024574  -3.3156E-19   4.0996E-21  -1.7021E-20
1.5349E-04
         15            0.1402    -0.024574  -3.3156E-19   4.0996E-21  -1.7021E-20
1.5349E-04

       MINIMUM         0.1402    -0.024574  -1.1525E-18   4.0996E-21  -1.7021E-20
2.5514E-20
       Pile N.          11           11            1           11           11
```

```
    6
       MAXIMUM         0.1588     0.025242   1.1963E-03   1.6240E-20   1.5349E-04
1.5349E-04
       Pile N.          1            1            6            6            6
    1

       * PILE TOP REACTIONS *

      PILE GROUP   AXIAL,KIP    LAT. y,KIP   LAT. z,KIP MOM x,KIP-IN MOM y,KIP-IN
MOM z,KIP-IN
      **********  ***********  ***********  ***********  ***********  ***********
***********
          1            192.11       13.712  -2.8223E-16   4.0598E-16   3.8682E-15
   501.77
          2            192.11       13.712  -2.8223E-16   4.0598E-16   3.8682E-15
   501.77
          3            192.11       13.712  -2.8223E-16   4.0598E-16   3.8682E-15
   501.77
          4            192.11       13.712  -2.8223E-16   4.0598E-16   3.8682E-15
   501.77
          5            192.11       13.712  -2.8223E-16   4.0598E-16   3.8682E-15
   501.77
          6            178.60  -6.5389E-14      -1.4048   7.2761E-16       66.463
-7.2092E-13
          7            178.60  -6.5389E-14      -1.4048   7.2761E-16       66.463
-7.2092E-13
          8            178.60  -6.5389E-14      -1.4048   7.2761E-16       66.463
-7.2092E-13
          9            178.60  -6.5389E-14      -1.4048   7.2761E-16       66.463
-7.2092E-13
         10            178.60  -6.5389E-14      -1.4048   7.2761E-16       66.463
-7.2092E-13
         11            171.06      -8.0193   2.9965E-17   1.7711E-16  -3.7897E-15
  -208.36
         12            171.06      -8.0193   2.9965E-17   1.7711E-16  -3.7897E-15
  -208.36
         13            171.06      -8.0193   2.9965E-17   1.7711E-16  -3.7897E-15
  -208.36
         14            171.06      -8.0193   2.9965E-17   1.7711E-16  -3.7897E-15
  -208.36
         15            171.06      -8.0193   2.9965E-17   1.7711E-16  -3.7897E-15
  -208.36

       MINIMUM         171.06      -8.0193      -1.4048   1.7711E-16  -3.7897E-15
  -208.36
       Pile N.         11           11            6           11           11
   11
       MAXIMUM         192.11       13.712   2.9965E-17   7.2761E-16       66.463
   501.77
       Pile N.          1            1           11            6            6
```

```
    1

      PILE GROUP   STRESS,KIP/IN**2
      **********  ****************
          1            9.8802
          2            9.8802
          3            9.8802
          4            9.8802
          5            9.8802
          6            7.7228
          7            7.7228
          8            7.7228
          9            7.7228
         10            7.7228
         11            7.3315
         12            7.3315
         13            7.3315
         14            7.3315
         15            7.3315

       MINIMUM         7.3315
       Pile N.         11
       MAXIMUM         9.8802
       Pile N.          1

       * EFFECTS FOR LATERALLY LOADED PILE *

       * MINIMUM VALUES AND LOCATIONS *

     PILE     DISPL.      DISPL.      MOMENT      MOMENT       SHEAR       SHEAR
SOIL REACT  SOIL REACT     TOTAL    FLEX. RIG.  FLEX. RIG.
               y-DIR       z-DIR       z-DIR       y-DIR       y-DIR       z-DIR
  y-DIR       z-DIR      STRESS       z-DIR       y-DIR
               IN          IN        KIP-IN      KIP-IN        KIP         KIP
 KIP/IN      KIP/IN     KIP/IN**2   KIP-IN**2   KIP-IN**2
    ******  **********  **********  **********  **********  **********  **********
**********  **********  **********  **********  **********
        1  -8.6171E-04 -1.1525E-18     -501.77 -2.2538E-15     -1.0303 -2.5833E-16
-0.010963 -7.4624E-18      6.7944  3.1594E+07  9.1843E+06
     x(FT)      17.480      0.0000      0.0000      3.8000      13.680      0.0000
   19.000      0.7600      63.080      0.0000      0.0000
        2  -8.6171E-04 -1.1525E-18     -501.77 -2.2538E-15     -1.0303 -2.5833E-16
-0.010963 -7.4624E-18      6.7944  3.1594E+07  9.1843E+06
     x(FT)      17.480      0.0000      0.0000      3.8000      13.680      0.0000
   19.000      0.7600      63.080      0.0000      0.0000
        3  -8.6171E-04 -1.1525E-18     -501.77 -2.2538E-15     -1.0303 -2.5833E-16
-0.010963 -7.4624E-18      6.7944  3.1594E+07  9.1843E+06
     x(FT)      17.480      0.0000      0.0000      3.8000      13.680      0.0000
   19.000      0.7600      63.080      0.0000      0.0000
        4  -8.6171E-04 -1.1525E-18     -501.77 -2.2538E-15     -1.0303 -2.5833E-16
```

```
-0.010963 -7.4624E-18      6.7944  3.1594E+07  9.1843E+06
     x(FT)      17.480      0.0000      0.0000      3.8000      13.680      0.0000
   19.000      0.7600      63.080      0.0000      0.0000
        5  -8.6171E-04 -1.1525E-18     -501.77 -2.2538E-15     -1.0303 -2.5833E-16
-0.010963 -7.4624E-18      6.7944  3.1594E+07  9.1843E+06
     x(FT)      17.480      0.0000      0.0000      3.8000      13.680      0.0000
   19.000      0.7600      63.080      0.0000      0.0000
        6  -1.0095E-17 -9.2047E-04 -7.6609E-14     -2.1508 -6.4959E-14     -1.7601
-5.6300E-15   -0.065968      6.3167  3.1594E+07  9.1843E+06
     x(FT)      0.0000      3.0400      3.8000      9.1200      0.0000      1.5200
   0.7600      2.2800      43.320      0.0000      0.0000
        7  -1.0095E-17 -9.2047E-04 -7.6609E-14     -2.1508 -6.4959E-14     -1.7601
-5.6300E-15   -0.065968      6.3167  3.1594E+07  9.1843E+06
     x(FT)      0.0000      3.0400      3.8000      9.1200      0.0000      1.5200
   0.7600      2.2800      43.320      0.0000      0.0000
        8  -1.0095E-17 -9.2047E-04 -7.6609E-14     -2.1508 -6.4959E-14     -1.7601
-5.6300E-15   -0.065968      6.3167  3.1594E+07  9.1843E+06
     x(FT)      0.0000      3.0400      3.8000      9.1200      0.0000      1.5200
   0.7600      2.2800      43.320      0.0000      0.0000
        9  -1.0095E-17 -9.2047E-04 -7.6609E-14     -2.1508 -6.4959E-14     -1.7601
-5.6300E-15   -0.065968      6.3167  3.1594E+07  9.1843E+06
     x(FT)      0.0000      3.0400      3.8000      9.1200      0.0000      1.5200
   0.7600      2.2800      43.320      0.0000      0.0000
       10  -1.0095E-17 -9.2047E-04 -7.6609E-14     -2.1508 -6.4959E-14     -1.7601
-5.6300E-15   -0.065968      6.3167  3.1594E+07  9.1843E+06
     x(FT)      0.0000      3.0400      3.8000      9.1200      0.0000      1.5200
   0.7600      2.2800      43.320      0.0000      0.0000
       11    -0.024574 -3.3156E-19     -86.584 -3.7897E-15     -7.6703 -4.2913E-18
  -0.1612 -1.0709E-18      6.0501  3.1594E+07  9.1843E+06
     x(FT)      0.0000      0.0000      9.1200      0.0000      0.0000      12.160
   3.0400      0.7600      63.840      0.0000      0.0000
       12    -0.024574 -3.3156E-19     -86.584 -3.7897E-15     -7.6703 -4.2913E-18
  -0.1612 -1.0709E-18      6.0501  3.1594E+07  9.1843E+06
     x(FT)      0.0000      0.0000      9.1200      0.0000      0.0000      12.160
   3.0400      0.7600      63.840      0.0000      0.0000
       13    -0.024574 -3.3156E-19     -86.584 -3.7897E-15     -7.6703 -4.2913E-18
  -0.1612 -1.0709E-18      6.0501  3.1594E+07  9.1843E+06
     x(FT)      0.0000      0.0000      9.1200      0.0000      0.0000      12.160
   3.0400      0.7600      63.840      0.0000      0.0000
       14    -0.024574 -3.3156E-19     -86.584 -3.7897E-15     -7.6703 -4.2913E-18
  -0.1612 -1.0709E-18      6.0501  3.1594E+07  9.1843E+06
     x(FT)      0.0000      0.0000      9.1200      0.0000      0.0000      12.160
   3.0400      0.7600      63.840      0.0000      0.0000
       15    -0.024574 -3.3156E-19     -86.584 -3.7897E-15     -7.6703 -4.2913E-18
  -0.1612 -1.0709E-18      6.0501  3.1594E+07  9.1843E+06
     x(FT)      0.0000      0.0000      9.1200      0.0000      0.0000      12.160
   3.0400      0.7600      63.840      0.0000      0.0000

     Min.    -0.024574 -9.2047E-04     -501.77     -2.1508     -7.6703     -1.7601
  -0.1612   -0.065968      6.0501  3.1594E+07  9.1843E+06
```

```
   Pile N.      11           6           1           6          11           6
   11           6          11           1           1

       * MAXIMUM VALUES AND LOCATIONS *

     PILE     DISPL.      DISPL.      MOMENT      MOMENT       SHEAR       SHEAR
SOIL REACT  SOIL REACT     TOTAL    FLEX. RIG.  FLEX. RIG.
               y-DIR       z-DIR       z-DIR       y-DIR       y-DIR       z-DIR
  y-DIR       z-DIR      STRESS       z-DIR       y-DIR
                IN          IN        KIP-IN      KIP-IN        KIP         KIP
 KIP/IN      KIP/IN     KIP/IN**2   KIP-IN**2   KIP-IN**2
    ******  **********  **********  **********  **********  **********  **********
**********  **********  **********  **********  **********
        1     0.025981  3.0836E-20      85.121  3.8682E-15      13.195  2.8122E-17
   0.2620  8.7524E-19      9.8802  3.1594E+07  9.1843E+06
     x(FT)      0.7600      10.640      11.400      0.0000      0.0000      8.3600
   3.0400      11.400      0.0000      0.0000      0.0000
        2     0.025981  3.0836E-20      85.121  3.8682E-15      13.195  2.8122E-17
   0.2620  8.7524E-19      9.8802  3.1594E+07  9.1843E+06
     x(FT)      0.7600      10.640      11.400      0.0000      0.0000      8.3600
   3.0400      11.400      0.0000      0.0000      0.0000
        3     0.025981  3.0836E-20      85.121  3.8682E-15      13.195  2.8122E-17
   0.2620  8.7524E-19      9.8802  3.1594E+07  9.1843E+06
     x(FT)      0.7600      10.640      11.400      0.0000      0.0000      8.3600
   3.0400      11.400      0.0000      0.0000      0.0000
        4     0.025981  3.0836E-20      85.121  3.8682E-15      13.195  2.8122E-17
   0.2620  8.7524E-19      9.8802  3.1594E+07  9.1843E+06
     x(FT)      0.7600      10.640      11.400      0.0000      0.0000      8.3600
   3.0400      11.400      0.0000      0.0000      0.0000
        5     0.025981  3.0836E-20      85.121  3.8682E-15      13.195  2.8122E-17
   0.2620  8.7524E-19      9.8802  3.1594E+07  9.1843E+06
     x(FT)      0.7600      10.640      11.400      0.0000      0.0000      8.3600
   3.0400      11.400      0.0000      0.0000      0.0000
        6   3.1869E-19  1.1963E-03  7.2092E-13      66.463  9.3340E-16    0.048492
5.6898E-17    0.061541      7.7228  3.1594E+07  9.1843E+06
     x(FT)      9.8800      0.0000      0.0000      0.0000      7.6000      12.160
   12.920      0.7600      0.0000      0.0000      0.0000
        7   3.1869E-19  1.1963E-03  7.2092E-13      66.463  9.3340E-16    0.048492
5.6898E-17    0.061541      7.7228  3.1594E+07  9.1843E+06
     x(FT)      9.8800      0.0000      0.0000      0.0000      7.6000      12.160
   12.920      0.7600      0.0000      0.0000      0.0000
        8   3.1869E-19  1.1963E-03  7.2092E-13      66.463  9.3340E-16    0.048492
5.6898E-17    0.061541      7.7228  3.1594E+07  9.1843E+06
     x(FT)      9.8800      0.0000      0.0000      0.0000      7.6000      12.160
   12.920      0.7600      0.0000      0.0000      0.0000
        9   3.1869E-19  1.1963E-03  7.2092E-13      66.463  9.3340E-16    0.048492
5.6898E-17    0.061541      7.7228  3.1594E+07  9.1843E+06
     x(FT)      9.8800      0.0000      0.0000      0.0000      7.6000      12.160
   12.920      0.7600      0.0000      0.0000      0.0000
       10   3.1869E-19  1.1963E-03  7.2092E-13      66.463  9.3340E-16    0.048492
```

```
5.6898E-17    0.061541      7.7228  3.1594E+07  9.1843E+06
     x(FT)      9.8800      0.0000      0.0000      0.0000      7.6000      12.160
   12.920      0.7600      0.0000      0.0000      0.0000
       11   1.3062E-03  1.0181E-19      208.36  3.1379E-16      1.0116  5.0054E-17
9.0540E-03  2.6558E-18      7.3315  3.1594E+07  9.1843E+06
     x(FT)      14.440      5.3200      0.0000      9.1200      10.640      2.2800
   16.720      9.1200      0.0000      0.0000      0.0000
       12   1.3062E-03  1.0181E-19      208.36  3.1379E-16      1.0116  5.0054E-17
9.0540E-03  2.6558E-18      7.3315  3.1594E+07  9.1843E+06
     x(FT)      14.440      5.3200      0.0000      9.1200      10.640      2.2800
   16.720      9.1200      0.0000      0.0000      0.0000
       13   1.3062E-03  1.0181E-19      208.36  3.1379E-16      1.0116  5.0054E-17
9.0540E-03  2.6558E-18      7.3315  3.1594E+07  9.1843E+06
     x(FT)      14.440      5.3200      0.0000      9.1200      10.640      2.2800
   16.720      9.1200      0.0000      0.0000      0.0000
       14   1.3062E-03  1.0181E-19      208.36  3.1379E-16      1.0116  5.0054E-17
9.0540E-03  2.6558E-18      7.3315  3.1594E+07  9.1843E+06
     x(FT)      14.440      5.3200      0.0000      9.1200      10.640      2.2800
   16.720      9.1200      0.0000      0.0000      0.0000
       15   1.3062E-03  1.0181E-19      208.36  3.1379E-16      1.0116  5.0054E-17
9.0540E-03  2.6558E-18      7.3315  3.1594E+07  9.1843E+06
     x(FT)      14.440      5.3200      0.0000      9.1200      10.640      2.2800
   16.720      9.1200      0.0000      0.0000      0.0000

      Max.    0.025981  1.1963E-03      208.36      66.463      13.195    0.048492
   0.2620    0.061541      9.8802  3.1594E+07  9.1843E+06
   Pile N.       1           6          11           6           1           6
    1           6           1           1           1


     LOAD CASE :    10
     CASE NAME : STR IV-L2

     LOAD TYPE : Dead, DL

       REDUCTION FACTORS FOR CLOSELY-SPACED PILE GROUPS, COMBINED Y AND Z DIRECTIONS
       ESTIMATED USING MOVEMENT IN THE DIRECTION OF PILE CAP DISPLACEMENTS

            GROUP NO     P-FACTOR     Y-FACTOR

                1           0.8600       1.0000
                2           0.8600       1.0000
                3           0.8600       1.0000
                4           0.8600       1.0000
                5           0.8600       1.0000
                6           0.7210       1.0000
                7           0.7210       1.0000
                8           0.7210       1.0000
                9           0.7210       1.0000
```

```
          10          0.7210       1.0000
          11          0.5820       1.0000
          12          0.5820       1.0000
          13          0.5820       1.0000
          14          0.5820       1.0000
          15          0.5820       1.0000


     * TABLE L *   COMPUTATION ON PILE CAP


     * EQUIVALENT CONCENTRATED LOAD AT ORIGIN *


          VERT. LOAD,KIPS    HOR. LOAD Y,KIPS   HOR. LOAD Z,KIPS
                2701.98           30.9100           0.00000

         MOMENT X ,KIP-IN    MOMENT Y,KIP-IN    MOMENT Z,KIP-IN
                0.00000           0.00000           8261.37


     * DISPLACEMENT OF GROUPED PILE FOUNDATION AT ORIGIN *


           VERTICAL ,IN      HORIZONTAL Y,IN     HORIZONTAL Z,IN
                0.15155       -1.19633E-03       -7.42048E-19

         ANGLE ROT. X,RAD    ANGLE ROT. Y,RAD    ANGLE ROT. Z,RAD
            6.84141E-21       -1.61158E-20        1.53492E-04


     * PASSIVE RESISTANCE IN PILE CAP *

            HOR. LOAD Y,KIP    HOR. LOAD Z,KIP      POSITION, FT      EQ. DIAM, FT
                6.63967        7.00294E-14           -1.55556           35.1141


       THE GLOBAL STRUCTURAL COORDINATE SYSTEM
       ---------------------------------------

       * PILE TOP DISPLACEMENTS *

      PILE GROUP   DISP. X,IN   DISP. Y,IN   DISP. Z,IN   ROT. X,RAD   ROT. Y,RAD
ROT. Z,RAD
      **********  ***********  ***********  ***********  ***********  ***********
***********
          1            0.1608  -1.1963E-03  -1.1525E-18   6.8414E-21  -1.6116E-20
1.5349E-04
          2            0.1608  -1.1963E-03  -1.1525E-18   6.8414E-21  -1.6116E-20
```

```
1.5349E-04
          3            0.1608  -1.1963E-03  -1.1525E-18   6.8414E-21  -1.6116E-20
1.5349E-04
          4            0.1608  -1.1963E-03  -1.1525E-18   6.8414E-21  -1.6116E-20
1.5349E-04
          5            0.1608  -1.1963E-03  -1.1525E-18   6.8414E-21  -1.6116E-20
1.5349E-04
          6            0.1515  -1.1963E-03  -7.4205E-19   6.8414E-21  -1.6116E-20
1.5349E-04
          7            0.1515  -1.1963E-03  -7.4205E-19   6.8414E-21  -1.6116E-20
1.5349E-04
          8            0.1515  -1.1963E-03  -7.4205E-19   6.8414E-21  -1.6116E-20
1.5349E-04
          9            0.1515  -1.1963E-03  -7.4205E-19   6.8414E-21  -1.6116E-20
1.5349E-04
         10            0.1515  -1.1963E-03  -7.4205E-19   6.8414E-21  -1.6116E-20
1.5349E-04
         11            0.1423  -1.1963E-03  -3.3156E-19   6.8414E-21  -1.6116E-20
1.5349E-04
         12            0.1423  -1.1963E-03  -3.3156E-19   6.8414E-21  -1.6116E-20
1.5349E-04
         13            0.1423  -1.1963E-03  -3.3156E-19   6.8414E-21  -1.6116E-20
1.5349E-04
         14            0.1423  -1.1963E-03  -3.3156E-19   6.8414E-21  -1.6116E-20
1.5349E-04
         15            0.1423  -1.1963E-03  -3.3156E-19   6.8414E-21  -1.6116E-20
1.5349E-04

       MINIMUM         0.1423  -1.1963E-03  -1.1525E-18   6.8414E-21  -1.6116E-20
1.5349E-04
       Pile N.         11            1            1            1            1
    1
       MAXIMUM         0.1608  -1.1963E-03  -3.3156E-19   6.8414E-21  -1.6116E-20
1.5349E-04
       Pile N.          1            1           11            1            1
    1

       * PILE TOP REACTIONS *

      PILE GROUP   FOR. X,KIP   FOR. Y,KIP   FOR. Z,KIP MOM X,KIP-IN MOM Y,KIP-IN
MOM Z,KIP-IN
      **********  ***********  ***********  ***********  ***********  ***********
***********
          1            191.75      -18.049  -2.8223E-16   1.0362E-15   3.7489E-15
   501.77
          2            191.75      -18.049  -2.8223E-16   1.0362E-15   3.7489E-15
   501.77
          3            191.75      -18.049  -2.8223E-16   1.0362E-15   3.7489E-15
   501.77
          4            191.75      -18.049  -2.8223E-16   1.0362E-15   3.7489E-15
```

```
  501.77
         5            191.75      -18.049  -2.8223E-16   1.0362E-15   3.7489E-15
  501.77
         6            178.60       1.4048  -5.4539E-14  -3.3421E-15   7.2499E-13
  66.463
         7            178.60       1.4048  -5.4539E-14  -3.3421E-15   7.2499E-13
  66.463
         8            178.60       1.4048  -5.4539E-14  -3.3421E-15   7.2499E-13
  66.463
         9            178.60       1.4048  -5.4539E-14  -3.3421E-15   7.2499E-13
  66.463
        10            178.60       1.4048  -5.4539E-14  -3.3421E-15   7.2499E-13
  66.463
        11            170.05       20.205   2.9965E-17   7.9757E-16  -3.7090E-15
 -208.36
        12            170.05       20.205   2.9965E-17   7.9757E-16  -3.7090E-15
 -208.36
        13            170.05       20.205   2.9965E-17   7.9757E-16  -3.7090E-15
 -208.36
        14            170.05       20.205   2.9965E-17   7.9757E-16  -3.7090E-15
 -208.36
        15            170.05       20.205   2.9965E-17   7.9757E-16  -3.7090E-15
 -208.36

      MINIMUM         170.05      -18.049  -5.4539E-14  -3.3421E-15  -3.7090E-15
 -208.36
      Pile N.         11            1            6            6           11
  11
      MAXIMUM         191.75       20.205   2.9965E-17   1.0362E-15   7.2499E-13
  501.77
      Pile N.          1           11           11            1            6
   1


      THE PILE COORDINATE SYSTEM (LOCAL AXES)
      ---------------------------------------

      * PILE TOP DISPLACEMENTS *

     PILE GROUP   DISP. x,IN   DISP. y,IN   DISP. z,IN   ROT. x,RAD   ROT. y,RAD
ROT. z,RAD
     **********  ***********  ***********  ***********  ***********  ***********
***********
         1            0.1588     0.025242  -1.1525E-18   9.3971E-21  -1.4772E-20
1.5349E-04
         2            0.1588     0.025242  -1.1525E-18   9.3971E-21  -1.4772E-20
1.5349E-04
         3            0.1588     0.025242  -1.1525E-18   9.3971E-21  -1.4772E-20
1.5349E-04
         4            0.1588     0.025242  -1.1525E-18   9.3971E-21  -1.4772E-20
```

```
1.5349E-04
          5            0.1588     0.025242  -1.1525E-18   9.3971E-21  -1.4772E-20
1.5349E-04
          6            0.1515  -1.0095E-17   1.1963E-03   1.6240E-20   1.5349E-04
2.5514E-20
          7            0.1515  -1.0095E-17   1.1963E-03   1.6240E-20   1.5349E-04
2.5514E-20
          8            0.1515  -1.0095E-17   1.1963E-03   1.6240E-20   1.5349E-04
2.5514E-20
          9            0.1515  -1.0095E-17   1.1963E-03   1.6240E-20   1.5349E-04
2.5514E-20
         10            0.1515  -1.0095E-17   1.1963E-03   1.6240E-20   1.5349E-04
2.5514E-20
         11            0.1402    -0.024574  -3.3156E-19   4.0996E-21  -1.7021E-20
1.5349E-04
         12            0.1402    -0.024574  -3.3156E-19   4.0996E-21  -1.7021E-20
1.5349E-04
         13            0.1402    -0.024574  -3.3156E-19   4.0996E-21  -1.7021E-20
1.5349E-04
         14            0.1402    -0.024574  -3.3156E-19   4.0996E-21  -1.7021E-20
1.5349E-04
         15            0.1402    -0.024574  -3.3156E-19   4.0996E-21  -1.7021E-20
1.5349E-04

       MINIMUM         0.1402    -0.024574  -1.1525E-18   4.0996E-21  -1.7021E-20
2.5514E-20
       Pile N.         11           11            1           11           11
    6
       MAXIMUM         0.1588     0.025242   1.1963E-03   1.6240E-20   1.5349E-04
1.5349E-04
       Pile N.          1            1            6            6            6
    1

       * PILE TOP REACTIONS *

      PILE GROUP   AXIAL,KIP    LAT. y,KIP   LAT. z,KIP MOM x,KIP-IN MOM y,KIP-IN
MOM z,KIP-IN
      **********  ***********  ***********  ***********  ***********  ***********
***********
          1            192.11       13.712  -2.8223E-16   4.0598E-16   3.8682E-15
   501.77
          2            192.11       13.712  -2.8223E-16   4.0598E-16   3.8682E-15
   501.77
          3            192.11       13.712  -2.8223E-16   4.0598E-16   3.8682E-15
   501.77
          4            192.11       13.712  -2.8223E-16   4.0598E-16   3.8682E-15
   501.77
          5            192.11       13.712  -2.8223E-16   4.0598E-16   3.8682E-15
   501.77
          6            178.60  -6.5389E-14      -1.4048   7.2761E-16       66.463
```

```
-7.2092E-13
          7            178.60  -6.5389E-14      -1.4048   7.2761E-16       66.463
-7.2092E-13
          8            178.60  -6.5389E-14      -1.4048   7.2761E-16       66.463
-7.2092E-13
          9            178.60  -6.5389E-14      -1.4048   7.2761E-16       66.463
-7.2092E-13
         10            178.60  -6.5389E-14      -1.4048   7.2761E-16       66.463
-7.2092E-13
         11            171.06      -8.0193   2.9965E-17   1.7711E-16  -3.7897E-15
  -208.36
         12            171.06      -8.0193   2.9965E-17   1.7711E-16  -3.7897E-15
  -208.36
         13            171.06      -8.0193   2.9965E-17   1.7711E-16  -3.7897E-15
  -208.36
         14            171.06      -8.0193   2.9965E-17   1.7711E-16  -3.7897E-15
  -208.36
         15            171.06      -8.0193   2.9965E-17   1.7711E-16  -3.7897E-15
  -208.36

      MINIMUM          171.06      -8.0193      -1.4048   1.7711E-16  -3.7897E-15
  -208.36
      Pile N.          11           11            6           11           11
   11
      MAXIMUM          192.11       13.712   2.9965E-17   7.2761E-16       66.463
   501.77
      Pile N.           1            1           11            6            6
    1

     PILE GROUP   STRESS,KIP/IN**2
     **********  ****************
         1            9.8802
         2            9.8802
         3            9.8802
         4            9.8802
         5            9.8802
         6            7.7228
         7            7.7228
         8            7.7228
         9            7.7228
        10            7.7228
        11            7.3315
        12            7.3315
        13            7.3315
        14            7.3315
        15            7.3315

      MINIMUM         7.3315
      Pile N.         11
      MAXIMUM         9.8802
```

```
       Pile N.          1

       * EFFECTS FOR LATERALLY LOADED PILE *

       * MINIMUM VALUES AND LOCATIONS *

     PILE     DISPL.      DISPL.      MOMENT      MOMENT       SHEAR       SHEAR
SOIL REACT  SOIL REACT     TOTAL    FLEX. RIG.  FLEX. RIG.
               y-DIR       z-DIR       z-DIR       y-DIR       y-DIR       z-DIR
  y-DIR       z-DIR      STRESS       z-DIR       y-DIR
                IN          IN        KIP-IN      KIP-IN        KIP         KIP
 KIP/IN      KIP/IN     KIP/IN**2   KIP-IN**2   KIP-IN**2
    ******  **********  **********  **********  **********  **********  **********
**********  **********  **********  **********  **********
        1  -8.6171E-04 -1.1525E-18     -501.77 -2.2538E-15     -1.0303 -2.5833E-16
-0.010963 -7.4624E-18      6.7944  3.1594E+07  9.1843E+06
     x(FT)      17.480      0.0000      0.0000      3.8000      13.680      0.0000
   19.000      0.7600      63.080      0.0000      0.0000
        2  -8.6171E-04 -1.1525E-18     -501.77 -2.2538E-15     -1.0303 -2.5833E-16
-0.010963 -7.4624E-18      6.7944  3.1594E+07  9.1843E+06
     x(FT)      17.480      0.0000      0.0000      3.8000      13.680      0.0000
   19.000      0.7600      63.080      0.0000      0.0000
        3  -8.6171E-04 -1.1525E-18     -501.77 -2.2538E-15     -1.0303 -2.5833E-16
-0.010963 -7.4624E-18      6.7944  3.1594E+07  9.1843E+06
     x(FT)      17.480      0.0000      0.0000      3.8000      13.680      0.0000
   19.000      0.7600      63.080      0.0000      0.0000
        4  -8.6171E-04 -1.1525E-18     -501.77 -2.2538E-15     -1.0303 -2.5833E-16
-0.010963 -7.4624E-18      6.7944  3.1594E+07  9.1843E+06
     x(FT)      17.480      0.0000      0.0000      3.8000      13.680      0.0000
   19.000      0.7600      63.080      0.0000      0.0000
        5  -8.6171E-04 -1.1525E-18     -501.77 -2.2538E-15     -1.0303 -2.5833E-16
-0.010963 -7.4624E-18      6.7944  3.1594E+07  9.1843E+06
     x(FT)      17.480      0.0000      0.0000      3.8000      13.680      0.0000
   19.000      0.7600      63.080      0.0000      0.0000
        6  -1.0095E-17 -9.2047E-04 -7.6609E-14     -2.1508 -6.4959E-14     -1.7601
-5.6300E-15   -0.065968      6.3167  3.1594E+07  9.1843E+06
     x(FT)      0.0000      3.0400      3.8000      9.1200      0.0000      1.5200
   0.7600      2.2800      43.320      0.0000      0.0000
        7  -1.0095E-17 -9.2047E-04 -7.6609E-14     -2.1508 -6.4959E-14     -1.7601
-5.6300E-15   -0.065968      6.3167  3.1594E+07  9.1843E+06
     x(FT)      0.0000      3.0400      3.8000      9.1200      0.0000      1.5200
   0.7600      2.2800      43.320      0.0000      0.0000
        8  -1.0095E-17 -9.2047E-04 -7.6609E-14     -2.1508 -6.4959E-14     -1.7601
-5.6300E-15   -0.065968      6.3167  3.1594E+07  9.1843E+06
     x(FT)      0.0000      3.0400      3.8000      9.1200      0.0000      1.5200
   0.7600      2.2800      43.320      0.0000      0.0000
        9  -1.0095E-17 -9.2047E-04 -7.6609E-14     -2.1508 -6.4959E-14     -1.7601
-5.6300E-15   -0.065968      6.3167  3.1594E+07  9.1843E+06
     x(FT)      0.0000      3.0400      3.8000      9.1200      0.0000      1.5200
   0.7600      2.2800      43.320      0.0000      0.0000
```

```
       10  -1.0095E-17 -9.2047E-04 -7.6609E-14     -2.1508 -6.4959E-14     -1.7601
-5.6300E-15   -0.065968      6.3167  3.1594E+07  9.1843E+06
     x(FT)      0.0000      3.0400      3.8000      9.1200      0.0000      1.5200
   0.7600      2.2800      43.320      0.0000      0.0000
       11    -0.024574 -3.3156E-19     -86.584 -3.7897E-15     -7.6703 -4.2913E-18
  -0.1612 -1.0709E-18      6.0501  3.1594E+07  9.1843E+06
     x(FT)      0.0000      0.0000      9.1200      0.0000      0.0000      12.160
   3.0400      0.7600      63.840      0.0000      0.0000
       12    -0.024574 -3.3156E-19     -86.584 -3.7897E-15     -7.6703 -4.2913E-18
  -0.1612 -1.0709E-18      6.0501  3.1594E+07  9.1843E+06
     x(FT)      0.0000      0.0000      9.1200      0.0000      0.0000      12.160
   3.0400      0.7600      63.840      0.0000      0.0000
       13    -0.024574 -3.3156E-19     -86.584 -3.7897E-15     -7.6703 -4.2913E-18
  -0.1612 -1.0709E-18      6.0501  3.1594E+07  9.1843E+06
     x(FT)      0.0000      0.0000      9.1200      0.0000      0.0000      12.160
   3.0400      0.7600      63.840      0.0000      0.0000
       14    -0.024574 -3.3156E-19     -86.584 -3.7897E-15     -7.6703 -4.2913E-18
  -0.1612 -1.0709E-18      6.0501  3.1594E+07  9.1843E+06
     x(FT)      0.0000      0.0000      9.1200      0.0000      0.0000      12.160
   3.0400      0.7600      63.840      0.0000      0.0000
       15    -0.024574 -3.3156E-19     -86.584 -3.7897E-15     -7.6703 -4.2913E-18
  -0.1612 -1.0709E-18      6.0501  3.1594E+07  9.1843E+06
     x(FT)      0.0000      0.0000      9.1200      0.0000      0.0000      12.160
   3.0400      0.7600      63.840      0.0000      0.0000

      Min.   -0.024574 -9.2047E-04     -501.77     -2.1508     -7.6703     -1.7601
  -0.1612   -0.065968      6.0501  3.1594E+07  9.1843E+06
   Pile N.      11           6           1           6          11           6
   11           6          11           1           1

      * MAXIMUM VALUES AND LOCATIONS *

     PILE     DISPL.      DISPL.      MOMENT      MOMENT       SHEAR       SHEAR
SOIL REACT  SOIL REACT     TOTAL    FLEX. RIG.  FLEX. RIG.
               y-DIR       z-DIR       z-DIR       y-DIR       y-DIR       z-DIR
  y-DIR       z-DIR      STRESS       z-DIR       y-DIR
               IN          IN        KIP-IN      KIP-IN        KIP         KIP
 KIP/IN      KIP/IN     KIP/IN**2   KIP-IN**2   KIP-IN**2
    ******  **********  **********  **********  **********  **********  **********
**********  **********  **********  **********  **********
        1     0.025981  3.0836E-20      85.121  3.8682E-15      13.195  2.8122E-17
   0.2620  8.7524E-19      9.8802  3.1594E+07  9.1843E+06
     x(FT)      0.7600      10.640      11.400      0.0000      0.0000      8.3600
   3.0400      11.400      0.0000      0.0000      0.0000
        2     0.025981  3.0836E-20      85.121  3.8682E-15      13.195  2.8122E-17
   0.2620  8.7524E-19      9.8802  3.1594E+07  9.1843E+06
     x(FT)      0.7600      10.640      11.400      0.0000      0.0000      8.3600
   3.0400      11.400      0.0000      0.0000      0.0000
        3     0.025981  3.0836E-20      85.121  3.8682E-15      13.195  2.8122E-17
   0.2620  8.7524E-19      9.8802  3.1594E+07  9.1843E+06
```

```
     x(FT)      0.7600      10.640      11.400      0.0000      0.0000      8.3600
   3.0400      11.400      0.0000      0.0000      0.0000
        4     0.025981  3.0836E-20      85.121  3.8682E-15      13.195  2.8122E-17
   0.2620  8.7524E-19      9.8802  3.1594E+07  9.1843E+06
     x(FT)      0.7600      10.640      11.400      0.0000      0.0000      8.3600
   3.0400      11.400      0.0000      0.0000      0.0000
        5     0.025981  3.0836E-20      85.121  3.8682E-15      13.195  2.8122E-17
   0.2620  8.7524E-19      9.8802  3.1594E+07  9.1843E+06
     x(FT)      0.7600      10.640      11.400      0.0000      0.0000      8.3600
   3.0400      11.400      0.0000      0.0000      0.0000
        6   3.1869E-19  1.1963E-03  7.2092E-13      66.463  9.3340E-16    0.048492
5.6898E-17    0.061541      7.7228  3.1594E+07  9.1843E+06
     x(FT)      9.8800      0.0000      0.0000      0.0000      7.6000      12.160
   12.920      0.7600      0.0000      0.0000      0.0000
        7   3.1869E-19  1.1963E-03  7.2092E-13      66.463  9.3340E-16    0.048492
5.6898E-17    0.061541      7.7228  3.1594E+07  9.1843E+06
     x(FT)      9.8800      0.0000      0.0000      0.0000      7.6000      12.160
   12.920      0.7600      0.0000      0.0000      0.0000
        8   3.1869E-19  1.1963E-03  7.2092E-13      66.463  9.3340E-16    0.048492
5.6898E-17    0.061541      7.7228  3.1594E+07  9.1843E+06
     x(FT)      9.8800      0.0000      0.0000      0.0000      7.6000      12.160
   12.920      0.7600      0.0000      0.0000      0.0000
        9   3.1869E-19  1.1963E-03  7.2092E-13      66.463  9.3340E-16    0.048492
5.6898E-17    0.061541      7.7228  3.1594E+07  9.1843E+06
     x(FT)      9.8800      0.0000      0.0000      0.0000      7.6000      12.160
   12.920      0.7600      0.0000      0.0000      0.0000
       10   3.1869E-19  1.1963E-03  7.2092E-13      66.463  9.3340E-16    0.048492
5.6898E-17    0.061541      7.7228  3.1594E+07  9.1843E+06
     x(FT)      9.8800      0.0000      0.0000      0.0000      7.6000      12.160
   12.920      0.7600      0.0000      0.0000      0.0000
       11   1.3062E-03  1.0181E-19      208.36  3.1379E-16      1.0116  5.0054E-17
9.0540E-03  2.6558E-18      7.3315  3.1594E+07  9.1843E+06
     x(FT)      14.440      5.3200      0.0000      9.1200      10.640      2.2800
   16.720      9.1200      0.0000      0.0000      0.0000
       12   1.3062E-03  1.0181E-19      208.36  3.1379E-16      1.0116  5.0054E-17
9.0540E-03  2.6558E-18      7.3315  3.1594E+07  9.1843E+06
     x(FT)      14.440      5.3200      0.0000      9.1200      10.640      2.2800
   16.720      9.1200      0.0000      0.0000      0.0000
       13   1.3062E-03  1.0181E-19      208.36  3.1379E-16      1.0116  5.0054E-17
9.0540E-03  2.6558E-18      7.3315  3.1594E+07  9.1843E+06
     x(FT)      14.440      5.3200      0.0000      9.1200      10.640      2.2800
   16.720      9.1200      0.0000      0.0000      0.0000
       14   1.3062E-03  1.0181E-19      208.36  3.1379E-16      1.0116  5.0054E-17
9.0540E-03  2.6558E-18      7.3315  3.1594E+07  9.1843E+06
     x(FT)      14.440      5.3200      0.0000      9.1200      10.640      2.2800
   16.720      9.1200      0.0000      0.0000      0.0000
       15   1.3062E-03  1.0181E-19      208.36  3.1379E-16      1.0116  5.0054E-17
9.0540E-03  2.6558E-18      7.3315  3.1594E+07  9.1843E+06
     x(FT)      14.440      5.3200      0.0000      9.1200      10.640      2.2800
   16.720      9.1200      0.0000      0.0000      0.0000
```

```
   Max.    0.025981  1.1963E-03      208.36      66.463      13.195    0.048492
0.2620    0.061541      9.8802  3.1594E+07  9.1843E+06
Pile N.       1           6          11           6           1           6
 1           6           1           1           1


  LOAD CASE :    11
  CASE NAME : STR V-L1

  LOAD TYPE : Dead, DL

    REDUCTION FACTORS FOR CLOSELY-SPACED PILE GROUPS, COMBINED Y AND Z DIRECTIONS
    ESTIMATED USING MOVEMENT IN THE DIRECTION OF PILE CAP DISPLACEMENTS

         GROUP NO     P-FACTOR     Y-FACTOR

             1          0.8702       1.0000
             2          0.8702       1.0000
             3          0.8702       1.0000
             4          0.9493       1.0000
             5          0.9605       1.0000
             6          0.8419       1.0000
             7          0.8419       1.0000
             8          0.8419       1.0000
             9          0.9235       1.0000
            10          0.9350       1.0000
            11          0.8179       1.0000
            12          0.8179       1.0000
            13          0.8179       1.0000
            14          0.9017       1.0000
            15          0.9135       1.0000


  * TABLE L *   COMPUTATION ON PILE CAP


  * EQUIVALENT CONCENTRATED LOAD AT ORIGIN *


       VERT. LOAD,KIPS    HOR. LOAD Y,KIPS   HOR. LOAD Z,KIPS
             2577.77           44.6400          -32.9700

      MOMENT X ,KIP-IN    MOMENT Y,KIP-IN    MOMENT Z,KIP-IN
             0.00000           50000.7           10259.6


  * DISPLACEMENT OF GROUPED PILE FOUNDATION AT ORIGIN *
```

VERTICAL ,IN	HORIZONTAL Y,IN	HORIZONTAL Z,IN
0.14387	2.55853E-03	7.04477E-04

ANGLE ROT. X,RAD	ANGLE ROT. Y,RAD	ANGLE ROT. Z,RAD
2.02478E-07	1.80997E-04	1.92241E-04

* PASSIVE RESISTANCE IN PILE CAP *

HOR. LOAD Y,KIP	HOR. LOAD Z,KIP	POSITION, FT	EQ. DIAM, FT
2.18910	4.12351	-1.55556	35.1141

THE GLOBAL STRUCTURAL COORDINATE SYSTEM
---

* PILE TOP DISPLACEMENTS *

PILE GROUP	DISP. X,IN	DISP. Y,IN	DISP. Z,IN	ROT. X,RAD	ROT. Y,RAD	ROT. Z,RAD
**********	**********	**********	**********	**********	**********	**********
1	0.1228	2.5950E-03	6.9233E-04	2.0248E-07	1.8100E-04	1.9224E-04
2	0.1391	2.5768E-03	6.9233E-04	2.0248E-07	1.8100E-04	1.9224E-04
3	0.1554	2.5585E-03	6.9233E-04	2.0248E-07	1.8100E-04	1.9224E-04
4	0.1717	2.5403E-03	6.9233E-04	2.0248E-07	1.8100E-04	1.9224E-04
5	0.1880	2.5221E-03	6.9233E-04	2.0248E-07	1.8100E-04	1.9224E-04
6	0.1113	2.5950E-03	7.0448E-04	2.0248E-07	1.8100E-04	1.9224E-04
7	0.1276	2.5768E-03	7.0448E-04	2.0248E-07	1.8100E-04	1.9224E-04
8	0.1439	2.5585E-03	7.0448E-04	2.0248E-07	1.8100E-04	1.9224E-04
9	0.1602	2.5403E-03	7.0448E-04	2.0248E-07	1.8100E-04	1.9224E-04
10	0.1764	2.5221E-03	7.0448E-04	2.0248E-07	1.8100E-04	1.9224E-04
11	0.099756	2.5950E-03	7.1663E-04	2.0248E-07	1.8100E-04	1.9224E-04
12	0.1161	2.5768E-03	7.1663E-04	2.0248E-07	1.8100E-04	1.9224E-04
13	0.1323	2.5585E-03	7.1663E-04	2.0248E-07	1.8100E-04	1.9224E-04

```
         14            0.1486   2.5403E-03   7.1663E-04   2.0248E-07   1.8100E-04
1.9224E-04
         15            0.1649   2.5221E-03   7.1663E-04   2.0248E-07   1.8100E-04
1.9224E-04

       MINIMUM       0.099756   2.5221E-03   6.9233E-04   2.0248E-07   1.8100E-04
1.9224E-04
       Pile N.         11            5            1            1            1
    1
       MAXIMUM         0.1880   2.5950E-03   7.1663E-04   2.0248E-07   1.8100E-04
1.9224E-04
       Pile N.          5            1           11            1            1
    1

       * PILE TOP REACTIONS *

      PILE GROUP   FOR. X,KIP   FOR. Y,KIP   FOR. Z,KIP MOM X,KIP-IN MOM Y,KIP-IN
MOM Z,KIP-IN
      **********  ***********  ***********  ***********  ***********  ***********
***********
          1            149.01      -10.996      -1.2332       8.7751       60.431
   512.01
          2            167.15      -13.486      -1.1911       8.6019       59.391
   534.09
          3            185.28      -15.989      -1.1538       8.4491       58.474
   557.02
          4            203.58      -17.515      -1.1713       8.5270       58.942
   602.18
          5            221.74      -19.872      -1.1467       8.4280       58.348
   629.33
          6            135.63       5.0701      -3.6032   9.0717E-03       188.10
   131.43
          7            153.02       5.0610      -3.6064   9.0717E-03       188.11
   131.23
          8            170.41       5.0519      -3.6097   9.0717E-03       188.12
   131.02
          9            187.79       5.3600      -3.8059   9.0717E-03       193.11
   135.58
         10            205.18       5.3939      -3.8360   9.0717E-03       193.80
   136.02
         11            123.34       13.733      -1.7548      -11.008       73.939
  -83.211
         12            141.55       15.805      -1.6142      -10.482       70.778
  -119.82
         13            159.74       17.994      -1.5061      -10.063       68.263
  -153.36
         14            178.05       19.487      -1.4860      -9.9797       67.765
  -199.42
         15            196.24       21.658      -1.4208      -9.7153       66.178
  -232.42
```

```
      MINIMUM         123.34      -19.872      -3.8360      -11.008       58.348
  -232.42
      Pile N.         11            5           10           11            5
   15
      MAXIMUM         221.74       21.658      -1.1467       8.7751       193.80
   629.33
      Pile N.          5           15            5            1           10
    5


      THE PILE COORDINATE SYSTEM (LOCAL AXES)
      ---------------------------------------

      * PILE TOP DISPLACEMENTS *

     PILE GROUP   DISP. x,IN   DISP. y,IN   DISP. z,IN   ROT. x,RAD   ROT. y,RAD
ROT. z,RAD
     **********  ***********  ***********  ***********  ***********  ***********
***********
          1            0.1207     0.022747   6.9233E-04  -2.9549E-05   1.7857E-04
1.9224E-04
          2            0.1368     0.025406   6.9233E-04  -2.9549E-05   1.7857E-04
1.9224E-04
          3            0.1529     0.028066   6.9233E-04  -2.9549E-05   1.7857E-04
1.9224E-04
          4            0.1689     0.030725   6.9233E-04  -2.9549E-05   1.7857E-04
1.9224E-04
          5            0.1850     0.033385   6.9233E-04  -2.9549E-05   1.7857E-04
1.9224E-04
          6            0.1113   7.0448E-04  -2.5950E-03   2.0248E-07   1.9224E-04
-1.8100E-04
          7            0.1276   7.0448E-04  -2.5768E-03   2.0248E-07   1.9224E-04
-1.8100E-04
          8            0.1439   7.0448E-04  -2.5585E-03   2.0248E-07   1.9224E-04
-1.8100E-04
          9            0.1602   7.0448E-04  -2.5403E-03   2.0248E-07   1.9224E-04
-1.8100E-04
         10            0.1764   7.0448E-04  -2.5221E-03   2.0248E-07   1.9224E-04
-1.8100E-04
         11          0.098826    -0.013836   7.1663E-04   2.9948E-05   1.7850E-04
1.9224E-04
         12            0.1149    -0.016531   7.1663E-04   2.9948E-05   1.7850E-04
1.9224E-04
         13            0.1310    -0.019227   7.1663E-04   2.9948E-05   1.7850E-04
1.9224E-04
         14            0.1470    -0.021922   7.1663E-04   2.9948E-05   1.7850E-04
1.9224E-04
         15            0.1631    -0.024618   7.1663E-04   2.9948E-05   1.7850E-04
1.9224E-04
```

```
      MINIMUM       0.098826    -0.024618  -2.5950E-03  -2.9549E-05   1.7850E-04
-1.8100E-04
      Pile N.         11           15            6            1           11
    6
      MAXIMUM         0.1850     0.033385   7.1663E-04   2.9948E-05   1.9224E-04
1.9224E-04
      Pile N.          5            5           11           11            6
    1

      * PILE TOP REACTIONS *

     PILE GROUP   AXIAL,KIP    LAT. y,KIP   LAT. z,KIP MOM x,KIP-IN MOM y,KIP-IN
MOM z,KIP-IN
     **********  ***********  ***********  ***********  ***********  ***********
***********
          1            148.79       13.646      -1.2332      -1.2766       61.051
   512.01
          2            167.09       14.170      -1.1911      -1.2766       59.997
   534.09
          3            185.39       14.682      -1.1538      -1.2766       59.067
   557.02
          4            203.69       16.184      -1.1713      -1.2766       59.542
   602.18
          5            221.99       16.843      -1.1467      -1.2766       58.939
   629.33
          6            135.63      -3.6032      -5.0701   9.0717E-03       131.43
  -188.10
          7            153.02      -3.6064      -5.0610   9.0717E-03       131.23
  -188.11
          8            170.41      -3.6097      -5.0519   9.0717E-03       131.02
  -188.12
          9            187.79      -3.8059      -5.3600   9.0717E-03       135.58
  -193.11
         10            205.18      -3.8360      -5.3939   9.0717E-03       136.02
  -193.80
         11            123.92      -6.7263      -1.7548       1.2938       74.743
  -83.211
         12            142.22      -7.6757      -1.6142       1.2938       71.539
  -119.82
         13            160.53      -8.5061      -1.5061       1.2938       68.989
  -153.36
         14            178.83      -10.042      -1.4860       1.2938       68.484
  -199.42
         15            197.13      -10.891      -1.4208       1.2938       66.875
  -232.42

      MINIMUM         123.92      -10.891      -5.3939      -1.2766       58.939
  -232.42
      Pile N.         11           15           10            1            5
```

```
15
    MAXIMUM         221.99       16.843      -1.1467       1.2938       136.02
629.33
    Pile N.          5            5            5           11           10
 5

   PILE GROUP   STRESS,KIP/IN**2
   **********  ****************
       1            8.6660
       2            9.4310
       3            10.203
       4            11.116
       5            11.918
       6            7.8087
       7            8.4196
       8            9.0305
       9            9.7464
      10            10.371
      11            6.0449
      12            6.7135
      13            7.4152
      14            8.2230
      15            8.9832

    MINIMUM         6.0449
    Pile N.         11
    MAXIMUM         11.918
    Pile N.          5

    * EFFECTS FOR LATERALLY LOADED PILE *

    * MINIMUM VALUES AND LOCATIONS *

     PILE     DISPL.      DISPL.      MOMENT      MOMENT       SHEAR       SHEAR
SOIL REACT  SOIL REACT     TOTAL    FLEX. RIG.  FLEX. RIG.
               y-DIR       z-DIR       z-DIR       y-DIR       y-DIR       z-DIR
  y-DIR       z-DIR      STRESS       z-DIR       y-DIR
               IN          IN        KIP-IN      KIP-IN        KIP         KIP
 KIP/IN      KIP/IN     KIP/IN**2   KIP-IN**2   KIP-IN**2
    ******  **********  **********  **********  **********  **********  **********
**********  **********  **********  **********  **********
        1  -9.1750E-04 -2.4756E-03     -512.01     -4.7005     -1.1294     -1.2532
-0.011958   -0.028282      5.2625  3.1594E+07  9.1843E+06
     x(FT)      16.720      3.8000      0.0000      11.400      13.680      0.0000
   18.240      3.0400      63.080      0.0000      0.0000
        2  -9.0139E-04 -2.5268E-03     -534.09     -4.6847     -1.0831     -1.2108
-0.011557   -0.026864      5.9097  3.1594E+07  9.1843E+06
     x(FT)      17.480      3.8000      0.0000      11.400      14.440      0.0000
   19.000      3.0400      63.080      0.0000      0.0000
        3  -9.5910E-04 -2.5710E-03     -557.02     -4.7680     -1.1263     -1.1733
```

```
-0.011885   -0.025601      6.5569  3.1594E+07  9.1843E+06
     x(FT)      17.480      3.8000      0.0000      11.400      14.440      0.0000
   19.000      3.0400      63.080      0.0000      0.0000
        4  -1.0478E-03 -2.5423E-03     -602.18     -4.8072     -1.2342     -1.1921
-0.013120   -0.026129      7.2041  3.1594E+07  9.1843E+06
     x(FT)      17.480      3.8000      0.0000      11.400      14.440      0.0000
   19.000      3.0400      63.080      0.0000      0.0000
        5  -1.1608E-03 -2.5692E-03     -629.33     -4.9527     -1.3279     -1.1677
-0.013978   -0.025281      7.8513  3.1594E+07  9.1843E+06
     x(FT)      17.480      3.8000      0.0000      11.400      13.680      0.0000
   19.000      3.0400      63.840      0.0000      0.0000
        6  -3.0428E-03 -4.1271E-03     -12.428     -6.7096     -3.6434     -4.9445
-0.075717     -0.1293      4.7971  3.1594E+07  9.1843E+06
     x(FT)      4.5600      1.5200      12.920      7.6000      0.0000      0.0000
   2.2800      2.2800      58.520      0.0000      0.0000
        7  -3.0428E-03 -4.1118E-03     -12.432     -6.6881     -3.6471     -4.9374
-0.075834     -0.1291      5.4120  3.1594E+07  9.1843E+06
     x(FT)      4.5600      1.5200      12.920      7.6000      0.0000      0.0000
   2.2800      2.2800      58.520      0.0000      0.0000
        8  -3.0428E-03 -4.0965E-03     -12.436     -6.6667     -3.6508     -4.9304
-0.075951     -0.1288      6.0269  3.1594E+07  9.1843E+06
     x(FT)      4.5600      1.5200      12.920      7.6000      0.0000      0.0000
   2.2800      2.2800      58.520      0.0000      0.0000
        9  -2.9480E-03 -4.0199E-03     -12.356     -6.9087     -3.8512     -5.2282
-0.082004     -0.1379      6.6418  3.1594E+07  9.1843E+06
     x(FT)      4.5600      1.5200      12.920      7.6000      0.0000      0.0000
   2.2800      1.5200      57.760      0.0000      0.0000
       10  -2.9351E-03 -3.9964E-03     -12.344     -6.9188     -3.8823     -5.2626
-0.082956     -0.1391      7.2568  3.1594E+07  9.1843E+06
     x(FT)      4.5600      1.5200      12.920      7.6000      0.0000      0.0000
   2.2800      1.5200      57.760      0.0000      0.0000
       11    -0.013836 -1.7958E-03     -79.664     -3.6212     -6.3716     -1.7779
  -0.1636   -0.045613      4.3829  3.1594E+07  9.1843E+06
     x(FT)      0.0000      3.0400      4.5600      8.3600      0.0000      0.0000
   3.0400      3.0400      60.040      0.0000      0.0000
       12    -0.016531 -1.9130E-03     -79.639     -3.9501     -7.2831     -1.6364
  -0.1806   -0.040292      5.0302  3.1594E+07  9.1843E+06
     x(FT)      0.0000      3.0400      4.5600      9.1200      0.0000      0.0000
   3.0400      3.0400      60.800      0.0000      0.0000
       13    -0.019227 -2.0089E-03     -79.384     -4.2073     -8.0782     -1.5277
  -0.1946   -0.036378      5.6774  3.1594E+07  9.1843E+06
     x(FT)      0.0000      3.0400      5.3200      9.1200      0.0000      0.0000
   3.0400      3.0400      60.800      0.0000      0.0000
       14    -0.021922 -2.0278E-03     -85.028     -4.4411     -9.5339     -1.5088
  -0.2252   -0.035677      6.3247  3.1594E+07  9.1843E+06
     x(FT)      0.0000      3.0400      6.0800      9.1200      0.0000      0.0000
   3.0400      3.0400      61.560      0.0000      0.0000
       15    -0.024617 -2.0900E-03     -89.141     -4.5750     -10.341     -1.4436
  -0.2396   -0.033426      6.9720  3.1594E+07  9.1843E+06
     x(FT)      0.0000      3.0400      6.8400      9.1200      0.0000      0.0000
```

```
   3.0400      3.0400      61.560      0.0000      0.0000

      Min.   -0.024617 -4.1271E-03     -629.33     -6.9188     -10.341     -5.2626
  -0.2396     -0.1391      4.3829  3.1594E+07  9.1843E+06
   Pile N.      15           6           5          10          15          10
   15          10          11           1           1

       * MAXIMUM VALUES AND LOCATIONS *

     PILE     DISPL.      DISPL.      MOMENT      MOMENT       SHEAR       SHEAR
SOIL REACT  SOIL REACT     TOTAL    FLEX. RIG.  FLEX. RIG.
               y-DIR       z-DIR       z-DIR       y-DIR       y-DIR       z-DIR
  y-DIR       z-DIR      STRESS       z-DIR       y-DIR
                IN          IN        KIP-IN      KIP-IN        KIP         KIP
 KIP/IN      KIP/IN     KIP/IN**2   KIP-IN**2   KIP-IN**2
    ******  **********  **********  **********  **********  **********  **********
**********  **********  **********  **********  **********
        1     0.023873  6.9233E-04      83.637      61.051      13.150    0.089775
   0.2595  3.3780E-03      8.6660  3.1594E+07  9.1843E+06
     x(FT)      1.5200      0.0000      12.160      0.0000      0.0000      12.920
   3.0400      0.0000      0.0000      0.0000      0.0000
        2     0.026457  6.9233E-04      87.662      59.997      13.643    0.079999
   0.2679  3.2253E-03      9.4310  3.1594E+07  9.1843E+06
     x(FT)      0.7600      0.0000      11.400      0.0000      0.0000      12.920
   3.0400      0.0000      0.0000      0.0000      0.0000
        3     0.029086  6.9233E-04      94.432      59.067      14.125    0.078438
   0.2753  3.0938E-03      10.203  3.1594E+07  9.1843E+06
     x(FT)      0.7600      0.0000      11.400      0.0000      0.0000      13.680
   3.0400      0.0000      0.0000      0.0000      0.0000
        4     0.031686  6.9233E-04      103.37      59.542      15.544    0.079208
   0.3051  3.2498E-03      11.116  3.1594E+07  9.1843E+06
     x(FT)      0.7600      0.0000      11.400      0.0000      0.0000      12.920
   3.0400      0.0000      0.0000      0.0000      0.0000
        5     0.034309  6.9233E-04      112.45      58.939      16.165    0.081059
   0.3155  3.1759E-03      11.918  3.1594E+07  9.1843E+06
     x(FT)      0.7600      0.0000      11.400      0.0000      0.0000      12.920
   3.0400      0.0000      0.0000      0.0000      0.0000
        6   7.0448E-04  7.7004E-05      188.10      131.43      0.1833    0.099154
8.0072E-03  1.9141E-03      7.8087  3.1594E+07  9.1843E+06
     x(FT)      0.0000      13.680      0.0000      0.0000      16.720      11.400
   0.0000      15.960      0.0000      0.0000      0.0000
        7   7.0448E-04  7.6961E-05      188.11      131.23      0.1835    0.099080
8.0072E-03  1.9134E-03      8.4196  3.1594E+07  9.1843E+06
     x(FT)      0.0000      13.680      0.0000      0.0000      16.720      11.400
   0.0000      15.960      0.0000      0.0000      0.0000
        8   7.0448E-04  7.6917E-05      188.12      131.02      0.1836    0.099006
8.0072E-03  1.9127E-03      9.0305  3.1594E+07  9.1843E+06
     x(FT)      0.0000      13.680      0.0000      0.0000      16.720      11.400
   0.0000      15.960      0.0000      0.0000      0.0000
        9   7.0448E-04  7.9940E-05      193.11      135.58      0.1829      0.1022
```

```
8.7830E-03  1.9144E-03      9.7464  3.1594E+07  9.1843E+06
     x(FT)      0.0000      12.920      0.0000      0.0000      16.720      11.400
   0.0000      15.200      0.0000      0.0000      0.0000
       10   7.0448E-04  8.0895E-05      193.80      136.02      0.1827      0.1025
8.8925E-03  1.9126E-03      10.371  3.1594E+07  9.1843E+06
     x(FT)      0.0000      12.920      0.0000      0.0000      16.720      11.400
   0.0000      15.200      0.0000      0.0000      0.0000
       11   8.7509E-04  7.1663E-04      83.211      74.743      0.8430    0.052932
8.1578E-03  4.0456E-03      6.0449  3.1594E+07  9.1843E+06
     x(FT)      11.400      0.0000      0.0000      0.0000      8.3600      11.400
   12.160      0.0000      0.0000      0.0000      0.0000
       12   8.5354E-04  7.1663E-04      119.82      71.539      0.8331    0.057237
8.0729E-03  3.7558E-03      6.7135  3.1594E+07  9.1843E+06
     x(FT)      12.920      0.0000      0.0000      0.0000      9.1200      12.160
   13.680      0.0000      0.0000      0.0000      0.0000
       13   8.7599E-04  7.1663E-04      153.36      68.989      0.8518    0.060776
8.2684E-03  3.5260E-03      7.4152  3.1594E+07  9.1843E+06
     x(FT)      12.920      0.0000      0.0000      0.0000      9.8800      12.160
   14.440      0.0000      0.0000      0.0000      0.0000
       14   9.3898E-04  7.1663E-04      199.42      68.484      0.9444    0.065129
9.3378E-03  3.6796E-03      8.2230  3.1594E+07  9.1843E+06
     x(FT)      13.680      0.0000      0.0000      0.0000      9.8800      12.160
   15.200      0.0000      0.0000      0.0000      0.0000
       15   9.9408E-04  7.1663E-04      232.42      66.875      1.0011    0.067319
9.8769E-03  3.5513E-03      8.9832  3.1594E+07  9.1843E+06
     x(FT)      13.680      0.0000      0.0000      0.0000      10.640      12.160
   15.960      0.0000      0.0000      0.0000      0.0000

      Max.    0.034309  7.1663E-04      232.42      136.02      16.165      0.1025
   0.3155  4.0456E-03      11.918  3.1594E+07  9.1843E+06
   Pile N.       5          11          15          10           5          10
    5          11           5           1           1


     LOAD CASE :    12
     CASE NAME : STR V-L2

     LOAD TYPE : Dead, DL

       REDUCTION FACTORS FOR CLOSELY-SPACED PILE GROUPS, COMBINED Y AND Z DIRECTIONS
       ESTIMATED USING MOVEMENT IN THE DIRECTION OF PILE CAP DISPLACEMENTS

            GROUP NO     P-FACTOR     Y-FACTOR

                1           0.8673       1.0000
                2           0.8673       1.0000
                3           0.8673       1.0000
                4           0.9248       1.0000
                5           0.9330       1.0000
```

6	0.8094	1.0000
7	0.8094	1.0000
8	0.8094	1.0000
9	0.8707	1.0000
10	0.8795	1.0000
11	0.7583	1.0000
12	0.7583	1.0000
13	0.7583	1.0000
14	0.8235	1.0000
15	0.8327	1.0000

* TABLE L * COMPUTATION ON PILE CAP

* EQUIVALENT CONCENTRATED LOAD AT ORIGIN *

VERT. LOAD,KIPS	HOR. LOAD Y,KIPS	HOR. LOAD Z,KIPS
2774.08	44.6400	-32.9700

MOMENT X ,KIP-IN	MOMENT Y,KIP-IN	MOMENT Z,KIP-IN
0.00000	40577.8	10259.6

* DISPLACEMENT OF GROUPED PILE FOUNDATION AT ORIGIN *

VERTICAL ,IN	HORIZONTAL Y,IN	HORIZONTAL Z,IN
0.15582	2.14900E-03	2.58039E-05

ANGLE ROT. X,RAD	ANGLE ROT. Y,RAD	ANGLE ROT. Z,RAD
3.98977E-07	1.46689E-04	1.93465E-04

* PASSIVE RESISTANCE IN PILE CAP *

HOR. LOAD Y,KIP	HOR. LOAD Z,KIP	POSITION, FT	EQ. DIAM, FT
3.18111	3.57563	-1.55556	35.1141

THE GLOBAL STRUCTURAL COORDINATE SYSTEM
---

* PILE TOP DISPLACEMENTS *

PILE GROUP	DISP. X,IN	DISP. Y,IN	DISP. Z,IN	ROT. X,RAD	ROT. Y,RAD	ROT. Z,RAD
**********	**********	**********	**********	**********	**********	

```
***********
          1            0.1410   2.2208E-03   1.8653E-06   3.9898E-07   1.4669E-04
1.9347E-04
          2            0.1542   2.1849E-03   1.8653E-06   3.9898E-07   1.4669E-04
1.9347E-04
          3            0.1674   2.1490E-03   1.8653E-06   3.9898E-07   1.4669E-04
1.9347E-04
          4            0.1806   2.1131E-03   1.8653E-06   3.9898E-07   1.4669E-04
1.9347E-04
          5            0.1938   2.0772E-03   1.8653E-06   3.9898E-07   1.4669E-04
1.9347E-04
          6            0.1294   2.2208E-03   2.5804E-05   3.9898E-07   1.4669E-04
1.9347E-04
          7            0.1426   2.1849E-03   2.5804E-05   3.9898E-07   1.4669E-04
1.9347E-04
          8            0.1558   2.1490E-03   2.5804E-05   3.9898E-07   1.4669E-04
1.9347E-04
          9            0.1690   2.1131E-03   2.5804E-05   3.9898E-07   1.4669E-04
1.9347E-04
         10            0.1822   2.0772E-03   2.5804E-05   3.9898E-07   1.4669E-04
1.9347E-04
         11            0.1178   2.2208E-03   4.9743E-05   3.9898E-07   1.4669E-04
1.9347E-04
         12            0.1310   2.1849E-03   4.9743E-05   3.9898E-07   1.4669E-04
1.9347E-04
         13            0.1442   2.1490E-03   4.9743E-05   3.9898E-07   1.4669E-04
1.9347E-04
         14            0.1574   2.1131E-03   4.9743E-05   3.9898E-07   1.4669E-04
1.9347E-04
         15            0.1706   2.0772E-03   4.9743E-05   3.9898E-07   1.4669E-04
1.9347E-04

       MINIMUM         0.1178   2.0772E-03   1.8653E-06   3.9898E-07   1.4669E-04
1.9347E-04
       Pile N.         11            5            1            1            1
    1
       MAXIMUM         0.1938   2.2208E-03   4.9743E-05   3.9898E-07   1.4669E-04
1.9347E-04
       Pile N.          5            1           11            1            1
    1

       * PILE TOP REACTIONS *

      PILE GROUP   FOR. X,KIP   FOR. Y,KIP   FOR. Z,KIP MOM X,KIP-IN MOM Y,KIP-IN
MOM Z,KIP-IN
      **********  ***********  ***********  ***********  ***********  ***********
***********
          1            169.32      -13.879      -1.1572       7.7121       52.518
   534.05
          2            184.02      -15.912      -1.1250       7.5910       51.792
```

```
  552.39
         3            198.72      -17.955      -1.0957       7.4805       51.128
  570.83
         4            213.54      -19.274      -1.1076       7.5304       51.427
  605.75
         5            228.26      -21.209      -1.0874       7.4552       50.976
  627.24
         6            154.98       4.7573      -3.5282     0.017875       166.16
  126.51
         7            169.07       4.7394      -3.5354     0.017875       166.24
  126.13
         8            183.16       4.7214      -3.5427     0.017875       166.33
  125.74
         9            197.25       4.9322      -3.7106     0.017875       170.18
  128.86
        10            211.34       4.9449      -3.7410     0.017875       170.81
  128.94
        11            143.39       16.406      -1.4914      -9.1692       61.470
 -118.78
        12            158.12       18.218      -1.4050      -8.8481       59.542
 -145.12
        13            172.84       20.079      -1.3335      -8.5786       57.926
 -170.19
        14            187.66       21.343      -1.3278      -8.5457       57.728
 -206.33
        15            202.39       23.160      -1.2809      -8.3598       56.612
 -231.61

      MINIMUM         143.39      -21.209      -3.7410      -9.1692       50.976
 -231.61
      Pile N.         11            5           10           11            5
  15
      MAXIMUM         228.26       23.160      -1.0874       7.7121       170.81
  627.24
      Pile N.          5           15            5            1           10
   5


      THE PILE COORDINATE SYSTEM (LOCAL AXES)
      ---------------------------------------

      * PILE TOP DISPLACEMENTS *

     PILE GROUP   DISP. x,IN   DISP. y,IN   DISP. z,IN   ROT. x,RAD   ROT. y,RAD
ROT. z,RAD
     **********  ***********  ***********  ***********  ***********  ***********
***********
         1            0.1387     0.025368   1.8653E-06  -2.3716E-05   1.4476E-04
1.9347E-04
         2            0.1518     0.027503   1.8653E-06  -2.3716E-05   1.4476E-04
```

```
1.9347E-04
          3            0.1648     0.029637   1.8653E-06  -2.3716E-05   1.4476E-04
1.9347E-04
          4            0.1778     0.031772   1.8653E-06  -2.3716E-05   1.4476E-04
1.9347E-04
          5            0.1908     0.033906   1.8653E-06  -2.3716E-05   1.4476E-04
1.9347E-04
          6            0.1294   2.5804E-05  -2.2208E-03   3.9898E-07   1.9347E-04
-1.4669E-04
          7            0.1426   2.5804E-05  -2.1849E-03   3.9898E-07   1.9347E-04
-1.4669E-04
          8            0.1558   2.5804E-05  -2.1490E-03   3.9898E-07   1.9347E-04
-1.4669E-04
          9            0.1690   2.5804E-05  -2.1131E-03   3.9898E-07   1.9347E-04
-1.4669E-04
         10            0.1822   2.5804E-05  -2.0772E-03   3.9898E-07   1.9347E-04
-1.4669E-04
         11            0.1166    -0.017171   4.9743E-05   2.4503E-05   1.4463E-04
1.9347E-04
         12            0.1296    -0.019377   4.9743E-05   2.4503E-05   1.4463E-04
1.9347E-04
         13            0.1426    -0.021582   4.9743E-05   2.4503E-05   1.4463E-04
1.9347E-04
         14            0.1556    -0.023787   4.9743E-05   2.4503E-05   1.4463E-04
1.9347E-04
         15            0.1686    -0.025993   4.9743E-05   2.4503E-05   1.4463E-04
1.9347E-04

       MINIMUM         0.1166    -0.025993  -2.2208E-03  -2.3716E-05   1.4463E-04
-1.4669E-04
       Pile N.         11           15            6            1           11
    6
       MAXIMUM         0.1908     0.033906   4.9743E-05   2.4503E-05   1.9347E-04
1.9347E-04
       Pile N.          5            5           11           11            6
    1

       * PILE TOP REACTIONS *

      PILE GROUP   AXIAL,KIP    LAT. y,KIP   LAT. z,KIP MOM x,KIP-IN MOM y,KIP-IN
MOM z,KIP-IN
      **********  ***********  ***********  ***********  ***********  ***********
***********
          1            169.30       14.140      -1.1572      -1.0246       53.072
   534.05
          2            184.13       14.550      -1.1250      -1.0246       52.335
   552.39
          3            198.97       14.951      -1.0957      -1.0246       51.662
   570.83
          4            213.80       16.085      -1.1076      -1.0246       51.966
```

```
 605.75
        5            228.64       16.595      -1.0874      -1.0246       51.508
 627.24
        6            154.98      -3.5282      -4.7573     0.017875       126.51
-166.16
        7            169.07      -3.5354      -4.7394     0.017875       126.13
-166.24
        8            183.16      -3.5427      -4.7214     0.017875       125.74
-166.33
        9            197.25      -3.7106      -4.9322     0.017875       128.86
-170.18
       10            211.34      -3.7410      -4.9449     0.017875       128.94
-170.81
       11            144.13      -7.3842      -1.4914       1.0586       62.141
-118.78
       12            158.96      -8.0182      -1.4050       1.0586       60.187
-145.12
       13            173.79      -8.6021      -1.3335       1.0586       58.548
-170.19
       14            188.62      -9.7911      -1.3278       1.0586       58.347
-206.33
       15            203.45      -10.421      -1.2809       1.0586       57.216
-231.61

     MINIMUM         144.13      -10.421      -4.9449      -1.0246       51.508
-231.61
     Pile N.          11           15           10            1            5
 15
     MAXIMUM         228.64       16.595      -1.0874       1.0586       128.94
 627.24
     Pile N.           5            5            5           11           10
  5

    PILE GROUP   STRESS,KIP/IN**2
    **********  ****************
        1            9.4588
        2            10.085
        3            10.714
        4            11.446
        5            12.095
        6            8.3459
        7            8.8369
        8            9.3279
        9            9.8964
       10            10.398
       11            6.6016
       12            7.1771
       13            7.7682
       14            8.4413
       15            9.0648
```

```
       MINIMUM         6.6016
       Pile N.         11
       MAXIMUM         12.095
       Pile N.          5

       * EFFECTS FOR LATERALLY LOADED PILE *

       * MINIMUM VALUES AND LOCATIONS *

     PILE     DISPL.      DISPL.      MOMENT      MOMENT       SHEAR       SHEAR
SOIL REACT  SOIL REACT     TOTAL    FLEX. RIG.  FLEX. RIG.
               y-DIR       z-DIR       z-DIR       y-DIR       y-DIR       z-DIR
  y-DIR       z-DIR      STRESS       z-DIR       y-DIR
                IN          IN        KIP-IN      KIP-IN        KIP         KIP
 KIP/IN      KIP/IN     KIP/IN**2   KIP-IN**2   KIP-IN**2
    ******  **********  **********  **********  **********  **********  **********
**********  **********  **********  **********  **********
        1  -9.0432E-04 -2.3581E-03     -534.05     -4.1217     -1.0846     -1.1617
-0.011565   -0.025814      5.9878  3.1594E+07  9.1843E+06
     x(FT)      17.480      3.8000      0.0000      11.400      14.440      0.0000
   19.000      3.0400      63.080      0.0000      0.0000
        2  -9.4677E-04 -2.3918E-03     -552.39     -4.1849     -1.1160     -1.1298
-0.011796   -0.024822      6.5124  3.1594E+07  9.1843E+06
     x(FT)      17.480      3.8000      0.0000      11.400      14.440      0.0000
   19.000      3.0400      63.080      0.0000      0.0000
        3  -1.0087E-03 -2.4225E-03     -570.83     -4.2680     -1.1637     -1.1008
-0.012218   -0.023918      7.0371  3.1594E+07  9.1843E+06
     x(FT)      17.480      3.8000      0.0000      11.400      14.440      0.0000
   19.760      3.0400      61.560      0.0000      0.0000
        4  -1.0917E-03 -2.4042E-03     -605.75     -4.3066     -1.2561     -1.1132
-0.013208   -0.024249      7.5617  3.1594E+07  9.1843E+06
     x(FT)      17.480      3.8000      0.0000      11.400      14.440      0.0000
   19.000      3.0400      63.840      0.0000      0.0000
        5  -1.1893E-03 -2.4240E-03     -627.24     -4.4170     -1.3341     -1.0933
-0.013920   -0.023615      8.0864  3.1594E+07  9.1843E+06
     x(FT)      17.480      3.8000      0.0000      11.400      14.440      0.0000
   19.000      3.0400      63.840      0.0000      0.0000
        6  -2.7382E-03 -3.8404E-03     -11.194     -6.3656     -3.5332     -4.6563
-0.074744     -0.1211      5.4812  3.1594E+07  9.1843E+06
     x(FT)      3.8000      1.5200      12.920      8.3600      0.0000      0.0000
   2.2800      2.2800      57.760      0.0000      0.0000
        7  -2.7373E-03 -3.8099E-03     -11.193     -6.3243     -3.5407     -4.6411
-0.074968     -0.1206      5.9795  3.1594E+07  9.1843E+06
     x(FT)      3.8000      1.5200      12.920      8.3600      0.0000      0.0000
   2.2800      2.2800      57.760      0.0000      0.0000
        8  -2.7365E-03 -3.7794E-03     -11.193     -6.2831     -3.5484     -4.6257
-0.075193     -0.1202      6.4779  3.1594E+07  9.1843E+06
     x(FT)      3.8000      1.5200      12.920      8.3600      0.0000      0.0000
   2.2800      2.2800      57.760      0.0000      0.0000
```

```
        9  -2.6789E-03 -3.7038E-03     -11.123     -6.3688     -3.7168     -4.8315
-0.080106     -0.1262      6.9762  3.1594E+07  9.1843E+06
     x(FT)      3.8000      1.5200      12.160      7.6000      0.0000      0.0000
   2.2800      2.2800      57.760      0.0000      0.0000
       10  -2.6701E-03 -3.6674E-03     -11.124     -6.3454     -3.7476     -4.8459
-0.081009     -0.1266      7.4746  3.1594E+07  9.1843E+06
     x(FT)      3.8000      1.5200      12.160      7.6000      0.0000      0.0000
   2.2800      2.2800      57.760      0.0000      0.0000
       11    -0.017172 -1.9030E-03     -77.309     -3.9199     -7.0121     -1.4969
  -0.1722   -0.035866      5.0977  3.1594E+07  9.1843E+06
     x(FT)      0.0000      3.0400      4.5600      8.3600      0.0000      0.0000
   3.0400      3.0400      60.800      0.0000      0.0000
       12    -0.019377 -1.9755E-03     -77.385     -4.0618     -7.6196     -1.4107
  -0.1826   -0.032999      5.6221  3.1594E+07  9.1843E+06
     x(FT)      0.0000      3.0400      5.3200      9.1200      0.0000      0.0000
   3.0400      3.0400      61.560      0.0000      0.0000
       13    -0.021582 -2.0369E-03     -79.353     -4.2219     -8.1785     -1.3396
  -0.1917   -0.030655      6.1466  3.1594E+07  9.1843E+06
     x(FT)      0.0000      3.0400      6.0800      9.1200      0.0000      0.0000
   3.0400      3.0400      62.320      0.0000      0.0000
       14    -0.023787 -2.0455E-03     -85.177     -4.3303     -9.3051     -1.3343
  -0.2152   -0.030497      6.6710  3.1594E+07  9.1843E+06
     x(FT)      0.0000      3.0400      6.8400      9.1200      0.0000      0.0000
   3.0400      3.0400      61.560      0.0000      0.0000
       15    -0.025993 -2.0892E-03     -89.005     -4.4021     -9.9040     -1.2877
  -0.2256   -0.029023      7.1955  3.1594E+07  9.1843E+06
     x(FT)      0.0000      3.0400      7.6000      9.1200      0.0000      0.0000
   3.0400      3.0400      61.560      0.0000      0.0000

      Min.   -0.025993 -3.8404E-03     -627.24     -6.3688     -9.9040     -4.8459
  -0.2256     -0.1266      5.0977  3.1594E+07  9.1843E+06
   Pile N.      15           6           5           9          15          10
   15          10          11           1           1

       * MAXIMUM VALUES AND LOCATIONS *

     PILE     DISPL.      DISPL.      MOMENT      MOMENT       SHEAR       SHEAR
SOIL REACT  SOIL REACT     TOTAL    FLEX. RIG.  FLEX. RIG.
               y-DIR       z-DIR       z-DIR       y-DIR       y-DIR       z-DIR
  y-DIR       z-DIR      STRESS       z-DIR       y-DIR
                IN          IN        KIP-IN      KIP-IN        KIP         KIP
 KIP/IN      KIP/IN     KIP/IN**2   KIP-IN**2   KIP-IN**2
    ******  **********  **********  **********  **********  **********  **********
**********  **********  **********  **********  **********
        1     0.026430  9.3155E-05      87.711      53.072      13.615    0.071476
   0.2671  1.0227E-03      9.4588  3.1594E+07  9.1843E+06
     x(FT)      0.7600      15.960      11.400      0.0000      0.0000      12.920
   3.0400      15.960      0.0000      0.0000      0.0000
        2     0.028540  9.5195E-05      93.003      52.335      14.002    0.069836
   0.2731  9.8872E-04      10.085  3.1594E+07  9.1843E+06
```

```
     x(FT)      0.7600      15.960      11.400      0.0000      0.0000      12.920
   3.0400      15.960      0.0000      0.0000      0.0000
        3    0.030650  9.8431E-05      99.044      51.662      14.379    0.069565
   0.2788  9.7121E-04      10.714  3.1594E+07  9.1843E+06
     x(FT)      0.7600      15.960      11.400      0.0000      0.0000      12.920
   3.0400      15.960      0.0000      0.0000      0.0000
        4    0.032739  9.9015E-05      106.60      51.966      15.451    0.071177
   0.3009  9.9318E-04      11.446  3.1594E+07  9.1843E+06
     x(FT)      0.7600      15.960      11.400      0.0000      0.0000      12.920
   3.0400      15.960      0.0000      0.0000      0.0000
        5    0.034845  1.0367E-04      114.16      51.508      15.932    0.072764
   0.3087  1.0033E-03      12.095  3.1594E+07  9.1843E+06
     x(FT)      0.7600      15.960      11.400      0.0000      0.0000      12.920
   3.0400      15.960      0.0000      0.0000      0.0000
        6   5.2669E-05  6.9726E-05      166.16      126.51      0.1630    0.096607
2.5263E-03  1.9375E-03      8.3459  3.1594E+07  9.1843E+06
     x(FT)      19.000      13.680      0.0000      0.0000      15.960      11.400
   19.000      15.200      0.0000      0.0000      0.0000
        7   5.2725E-05  6.9269E-05      166.24      126.13      0.1631    0.096128
2.5275E-03  1.9313E-03      8.8369  3.1594E+07  9.1843E+06
     x(FT)      19.000      13.680      0.0000      0.0000      15.960      11.400
   18.240      15.200      0.0000      0.0000      0.0000
        8   5.2781E-05  6.8809E-05      166.33      125.74      0.1632    0.095646
2.5288E-03  1.9250E-03      9.3279  3.1594E+07  9.1843E+06
     x(FT)      19.000      13.680      0.0000      0.0000      15.960      11.400
   18.240      15.200      0.0000      0.0000      0.0000
        9   4.9881E-05  6.9855E-05      170.18      128.86      0.1649    0.097723
2.6438E-03  1.9189E-03      9.8964  3.1594E+07  9.1843E+06
     x(FT)      18.240      13.680      0.0000      0.0000      15.960      11.400
   18.240      15.200      0.0000      0.0000      0.0000
       10   4.9703E-05  6.9495E-05      170.81      128.94      0.1651    0.097514
2.6582E-03  1.9108E-03      10.398  3.1594E+07  9.1843E+06
     x(FT)      18.240      13.680      0.0000      0.0000      15.960      11.400
   18.240      15.200      0.0000      0.0000      0.0000
       11   8.8054E-04  7.9182E-05      118.78      62.141      0.8150    0.056455
7.7553E-03  7.8862E-04      6.6016  3.1594E+07  9.1843E+06
     x(FT)      12.920      14.440      0.0000      0.0000      9.1200      11.400
   14.440      15.200      0.0000      0.0000      0.0000
       12   9.0223E-04  8.5615E-05      145.12      60.187      0.8348    0.058439
7.9722E-03  8.0844E-04      7.1771  3.1594E+07  9.1843E+06
     x(FT)      13.680      14.440      0.0000      0.0000      9.8800      11.400
   15.200      15.200      0.0000      0.0000      0.0000
       13   9.4729E-04  9.1476E-05      170.19      58.548      0.8647    0.060017
8.3038E-03  8.2209E-04      7.7682  3.1594E+07  9.1843E+06
     x(FT)      13.680      14.440      0.0000      0.0000      10.640      11.400
   15.960      15.200      0.0000      0.0000      0.0000
       14   9.9580E-04  9.4146E-05      206.33      58.347      0.9479    0.062665
9.1910E-03  8.6052E-04      8.4413  3.1594E+07  9.1843E+06
     x(FT)      14.440      14.440      0.0000      0.0000      10.640      11.400
   15.960      15.200      0.0000      0.0000      0.0000
```

```
       15   1.0549E-03  9.7281E-05      231.61      57.216      0.9934    0.063237
9.6312E-03  8.6448E-04      9.0648  3.1594E+07  9.1843E+06
     x(FT)      14.440      14.440      0.0000      0.0000      10.640      12.160
   15.960      15.200      0.0000      0.0000      0.0000

      Max.    0.034845  1.0367E-04      231.61      128.94      15.932    0.097723
   0.3087  1.9375E-03      12.095  3.1594E+07  9.1843E+06
   Pile N.       5           5          15          10           5           9
    5           6           5           1           1



                 *****     SUMMARY FOR LOAD CASES AND COMBINATIONS      *****


                 *****     LOAD CASES RESULTS      *****

     LOAD CASE :     1

     * TABLE L *   COMPUTATION ON PILE CAP

     * EQUIVALENT CONCENTRATED LOAD AT ORIGIN *
          LOAD X,KIP     LOAD Y,KIP     LOAD Z,KIP    MOM X,KIP-IN   MOM Y,KIP-IN
MOM Z,KIP-IN
               2023.07        44.8400       -27.9100        0.00000        38374.6
     10703.2

     * DISPLACEMENT OF GROUPED PILE FOUNDATION AT ORIGIN *
           DISP X,IN      DISP Y,IN      DISP Z,IN      ROT X,RAD      ROT Y,RAD
  ROT Z,RAD
               0.11036    1.47068E-03    1.13944E-04   -6.75159E-07    1.38812E-04
 1.95613E-04

       * PILE TOP DISPLACEMENTS, GLOBAL *
                   DISP. X,IN   DISP. Y,IN   DISP. Z,IN   ROT. X,RAD   ROT. Y,RAD
ROT. Z,RAD
                  ***********  ***********  ***********  ***********  ***********
***********
       MINIMUM       0.073636   1.3491E-03   7.3434E-05  -6.7516E-07   1.3881E-04
1.9561E-04
       Pile N.         11           1           11           1           1
    1
       MAXIMUM         0.1471   1.5922E-03   1.5445E-04  -6.7516E-07   1.3881E-04
1.9561E-04
       Pile N.          5           5           1           1           1
    1

       * PILE TOP REACTIONS, GLOBAL *
                   FOR. X,KIP   FOR. Y,KIP   FOR. Z,KIP MOM X,KIP-IN MOM Y,KIP-IN
```

```
MOM Z,KIP-IN
                    ***********  ***********  ***********  ***********  ***********
***********
       MINIMUM         93.698      -15.011      -3.2204      -9.3182       48.183
  -106.04
       Pile N.         11            5            6           11            5
   15
       MAXIMUM         176.15       18.600      -1.0305       7.5368       153.58
   537.10
       Pile N.          5           15            5            1            6
    5

       * PILE TOP DISPLACEMENTS, LOCAL *
                     DISP. x,IN   DISP. y,IN   DISP. z,IN   ROT. x,RAD   ROT. y,RAD
ROT. z,RAD
                    ***********  ***********  ***********  ***********  ***********
***********
       MINIMUM       0.072857    -0.018746  -1.5922E-03  -2.3481E-05   1.3681E-04
-1.3881E-04
       Pile N.         11           15           10            1            1
    6
       MAXIMUM         0.1448     0.025745   1.5445E-04   2.2149E-05   1.9561E-04
1.9561E-04
       Pile N.          5            5            1           11            6
    1

       * PILE TOP REACTIONS, LOCAL *
                     AXIAL,KIP    LAT. y,KIP   LAT. z,KIP MOM x,KIP-IN MOM y,KIP-IN
MOM z,KIP-IN
                    ***********  ***********  ***********  ***********  ***********
***********
       MINIMUM         94.339      -6.2274      -4.1854      -1.0144       48.679
  -153.58
       Pile N.         11           15           10            1            5
    6
       MAXIMUM         176.23       14.146      -1.0305       0.9569       116.79
   537.10
       Pile N.          5            5            5           11           10
    5

       * EFFECTS FOR LATERALLY LOADED PILE *

     PILE     DISPL.      DISPL.      MOMENT      MOMENT       SHEAR       SHEAR
SOIL REACT  SOIL REACT     TOTAL
               y-DIR       z-DIR       z-DIR       y-DIR       y-DIR       z-DIR
  y-DIR       z-DIR      STRESS
                IN          IN        KIP-IN      KIP-IN        KIP         KIP
 KIP/IN      KIP/IN     KIP/IN**2
    ******  **********  **********  **********  **********  **********  **********
**********  **********  **********
```

```
      Min.   -0.018746 -3.4663E-03     -537.10     -5.5199     -5.9272     -4.1241
  -0.1420     -0.1059      3.3366
   Pile N.      15          10           5          10          15          10
   15          10          11
      Max.    0.026822  1.5445E-04      153.58      116.79      13.622    0.085203
   0.2664  1.7710E-03      9.6927
   Pile N.       5           1           6          10           5          10
    5          10           5

     LOAD CASE :     2

     * TABLE L *   COMPUTATION ON PILE CAP

     * EQUIVALENT CONCENTRATED LOAD AT ORIGIN *
          LOAD X,KIP     LOAD Y,KIP     LOAD Z,KIP    MOM X,KIP-IN   MOM Y,KIP-IN
MOM Z,KIP-IN
               2168.48        44.8400       -27.9100        0.00000        31394.6
     10703.2

     * DISPLACEMENT OF GROUPED PILE FOUNDATION AT ORIGIN *
           DISP X,IN      DISP Y,IN      DISP Z,IN      ROT X,RAD      ROT Y,RAD
  ROT Z,RAD
               0.11904    1.79332E-03    1.66102E-04    4.27629E-07    1.13294E-04
 2.00058E-04

       * PILE TOP DISPLACEMENTS, GLOBAL *
                    DISP. X,IN   DISP. Y,IN   DISP. Z,IN   ROT. X,RAD   ROT. Y,RAD
ROT. Z,RAD
                  ***********  ***********  ***********  ***********  ***********
***********
       MINIMUM       0.086645   1.7163E-03   1.4045E-04   4.2763E-07   1.1329E-04
2.0006E-04
       Pile N.         11            5            1            1            1
    1
       MAXIMUM         0.1514   1.8703E-03   1.9176E-04   4.2763E-07   1.1329E-04
2.0006E-04
       Pile N.          5            1           11            1            1
    1

       * PILE TOP REACTIONS, GLOBAL *
                    FOR. X,KIP   FOR. Y,KIP   FOR. Z,KIP MOM X,KIP-IN MOM Y,KIP-IN
MOM Z,KIP-IN
                  ***********  ***********  ***********  ***********  ***********
***********
       MINIMUM         108.57      -14.418      -2.9661      -7.7462       40.031
  -163.41
       Pile N.         11            5           10           11            3
   15
       MAXIMUM         181.19       16.287      -0.8704       6.0379       134.49
   574.04
```

```
      Pile N.          5           15            3            1           10
    5

      * PILE TOP DISPLACEMENTS, LOCAL *
                   DISP. x,IN   DISP. y,IN   DISP. z,IN   ROT. x,RAD   ROT. y,RAD
ROT. z,RAD
                  ***********  ***********  ***********  ***********  ***********
***********
      MINIMUM       0.085774    -0.019251  -1.8703E-03  -1.8199E-05   1.1168E-04
-1.1329E-04
      Pile N.         11           15            6            1           11
    6
      MAXIMUM         0.1491     0.026583   1.9176E-04   1.9043E-05   2.0006E-04
2.0006E-04
      Pile N.          5            5           11           11            6
    1

      * PILE TOP REACTIONS, LOCAL *
                   AXIAL,KIP    LAT. y,KIP   LAT. z,KIP MOM x,KIP-IN MOM y,KIP-IN
MOM z,KIP-IN
                  ***********  ***********  ***********  ***********  ***********
***********
      MINIMUM         109.05      -9.2916      -5.1597      -0.7863       40.452
  -163.41
      Pile N.         11           15           10            1            3
   15
      MAXIMUM         181.10       15.558      -0.8704       0.8227       133.74
   574.04
      Pile N.          5            5            3           11           10
    5

      * EFFECTS FOR LATERALLY LOADED PILE *

     PILE     DISPL.      DISPL.      MOMENT      MOMENT       SHEAR       SHEAR
SOIL REACT  SOIL REACT     TOTAL
               y-DIR       z-DIR       z-DIR       y-DIR       y-DIR       z-DIR
  y-DIR       z-DIR      STRESS
                IN          IN        KIP-IN      KIP-IN        KIP         KIP
 KIP/IN      KIP/IN     KIP/IN**2
    ******  **********  **********  **********  **********  **********  **********
**********  **********  **********
      Min.   -0.019251 -3.5534E-03     -574.04     -6.3976     -8.8136     -5.0720
  -0.2138     -0.1338      3.8570
   Pile N.      15           6           5           9          15          10
   15          10          11
      Max.    0.027652  1.9176E-04      163.41      133.74      14.962    0.099862
   0.2970  1.8951E-03      10.038
   Pile N.       5          11          15          10           5           9
    5           9           5
```

```
     LOAD CASE :     3

     * TABLE L *   COMPUTATION ON PILE CAP

     * EQUIVALENT CONCENTRATED LOAD AT ORIGIN *
          LOAD X,KIP     LOAD Y,KIP     LOAD Z,KIP    MOM X,KIP-IN   MOM Y,KIP-IN
MOM Z,KIP-IN
              2665.02        30.9100        0.00000        0.00000        50386.2
     8261.37

     * DISPLACEMENT OF GROUPED PILE FOUNDATION AT ORIGIN *
           DISP X,IN      DISP Y,IN      DISP Z,IN      ROT X,RAD      ROT Y,RAD
  ROT Z,RAD
              0.14911    1.32410E-03    3.06726E-03    9.33146E-08    1.83390E-04
 1.54991E-04

       * PILE TOP DISPLACEMENTS, GLOBAL *
                   DISP. X,IN   DISP. Y,IN   DISP. Z,IN   ROT. X,RAD   ROT. Y,RAD
ROT. Z,RAD
                  ***********  ***********  ***********  ***********  ***********
***********
       MINIMUM         0.1068   1.3073E-03   3.0617E-03   9.3315E-08   1.8339E-04
1.5499E-04
       Pile N.         11            5            1            1            1
    1
       MAXIMUM         0.1914   1.3409E-03   3.0728E-03   9.3315E-08   1.8339E-04
1.5499E-04
       Pile N.          5            1           11            1            1
    1

       * PILE TOP REACTIONS, GLOBAL *
                   FOR. X,KIP   FOR. Y,KIP   FOR. Z,KIP MOM X,KIP-IN MOM Y,KIP-IN
MOM Z,KIP-IN
                  ***********  ***********  ***********  ***********  ***********
***********
       MINIMUM         131.22      -20.631      -1.0890      -6.3418       41.521
  -304.86
       Pile N.         11            5            6           11            3
   15
       MAXIMUM         225.76       21.327      -0.3918       5.7078       141.04
   603.45
       Pile N.          5           15            1            1           10
    5

       * PILE TOP DISPLACEMENTS, LOCAL *
                   DISP. x,IN   DISP. y,IN   DISP. z,IN   ROT. x,RAD   ROT. y,RAD
ROT. z,RAD
                  ***********  ***********  ***********  ***********  ***********
***********
       MINIMUM         0.1056    -0.027116  -1.3409E-03  -3.0050E-05   1.5499E-04
```

```
-1.8339E-04
       Pile N.         11           15            6            1            6
    6
       MAXIMUM         0.1886     0.032752   3.0728E-03   3.0234E-05   1.8091E-04
1.5499E-04
       Pile N.          5            5           11           11            1
    1

       * PILE TOP REACTIONS, LOCAL *
                    AXIAL,KIP    LAT. y,KIP   LAT. z,KIP MOM x,KIP-IN MOM y,KIP-IN
MOM z,KIP-IN
                  ***********  ***********  ***********  ***********  ***********
***********
       MINIMUM         131.61      -12.669      -4.5895      -1.2982       41.877
  -304.86
       Pile N.         11           15           10            1            3
   15
       MAXIMUM         226.08       16.755      -0.3918       1.3062       113.15
   603.45
       Pile N.          5            5            1           11           10
    5

       * EFFECTS FOR LATERALLY LOADED PILE *

     PILE     DISPL.      DISPL.      MOMENT      MOMENT       SHEAR       SHEAR
SOIL REACT  SOIL REACT     TOTAL
               y-DIR       z-DIR       z-DIR       y-DIR       y-DIR       z-DIR
  y-DIR       z-DIR      STRESS
                IN          IN        KIP-IN      KIP-IN        KIP         KIP
 KIP/IN      KIP/IN     KIP/IN**2
    ******  **********  **********  **********  **********  **********  **********
**********  **********  **********
      Min.   -0.027116 -2.5450E-03     -603.45     -5.0027     -12.044     -4.5277
  -0.2722     -0.1299      4.6547
   Pile N.      15           6           5          10          15          10
   15          10          11
      Max.    0.033371  3.0729E-03      304.86      113.15      16.067    0.073644
   0.3189    0.018795      11.812
   Pile N.       5          11          15          10           5          10
    5          11           5

     LOAD CASE :     4

     * TABLE L *   COMPUTATION ON PILE CAP

     * EQUIVALENT CONCENTRATED LOAD AT ORIGIN *
          LOAD X,KIP     LOAD Y,KIP     LOAD Z,KIP    MOM X,KIP-IN   MOM Y,KIP-IN
MOM Z,KIP-IN
               2919.49        30.9100        0.00000        0.00000        38171.4
     8261.37
```

```
    * DISPLACEMENT OF GROUPED PILE FOUNDATION AT ORIGIN *
           DISP X,IN      DISP Y,IN      DISP Z,IN      ROT X,RAD      ROT Y,RAD
  ROT Z,RAD
              0.16455    1.22802E-03    2.05331E-03    6.02348E-07    1.38358E-04
 1.55955E-04

      * PILE TOP DISPLACEMENTS, GLOBAL *
                  DISP. X,IN   DISP. Y,IN   DISP. Z,IN   ROT. X,RAD   ROT. Y,RAD
ROT. Z,RAD
                 ***********  ***********  ***********  ***********  ***********
***********
      MINIMUM         0.1303   1.1196E-03   2.0172E-03   6.0235E-07   1.3836E-04
1.5595E-04
      Pile N.         11            5            1            1            1
    1
      MAXIMUM         0.1988   1.3365E-03   2.0895E-03   6.0235E-07   1.3836E-04
1.5595E-04
      Pile N.          5            1           11            1            1
    1

      * PILE TOP REACTIONS, GLOBAL *
                  FOR. X,KIP   FOR. Y,KIP   FOR. Z,KIP MOM X,KIP-IN MOM Y,KIP-IN
MOM Z,KIP-IN
                 ***********  ***********  ***********  ***********  ***********
***********
      MINIMUM         157.44      -21.780      -1.1823      -5.0327       33.389
  -319.79
      Pile N.         11            5            6           11            3
   15
      MAXIMUM         234.02       22.330      -0.3955       4.6659       116.04
   615.18
      Pile N.          5           15            3            1           10
    5

      * PILE TOP DISPLACEMENTS, LOCAL *
                  DISP. x,IN   DISP. y,IN   DISP. z,IN   ROT. x,RAD   ROT. y,RAD
ROT. z,RAD
                 ***********  ***********  ***********  ***********  ***********
***********
      MINIMUM         0.1287    -0.028497  -1.3365E-03  -2.2146E-05   1.3638E-04
-1.3836E-04
      Pile N.         11           15            6            1           11
    6
      MAXIMUM         0.1959     0.033781   2.0895E-03   2.3335E-05   1.5595E-04
1.5595E-04
      Pile N.          5            5           11           11            6
    1

      * PILE TOP REACTIONS, LOCAL *
```

```
                    AXIAL,KIP    LAT. y,KIP   LAT. z,KIP MOM x,KIP-IN MOM y,KIP-IN
MOM z,KIP-IN
                   ***********  ***********  ***********  ***********  ***********
***********
       MINIMUM         158.00      -13.009      -4.5688      -0.9568       33.690
  -319.79
       Pile N.         11           15           10            1            3
   15
       MAXIMUM         234.42       16.980      -0.3955       1.0081       112.31
   615.18
       Pile N.          5            5            3           11            9
    5

       * EFFECTS FOR LATERALLY LOADED PILE *

     PILE     DISPL.      DISPL.      MOMENT      MOMENT       SHEAR       SHEAR
SOIL REACT  SOIL REACT     TOTAL
               y-DIR       z-DIR       z-DIR       y-DIR       y-DIR       z-DIR
  y-DIR       z-DIR      STRESS
                IN          IN        KIP-IN      KIP-IN        KIP         KIP
 KIP/IN      KIP/IN     KIP/IN**2
    ******  **********  **********  **********  **********  **********  **********
**********  **********  **********
      Min.   -0.028497 -2.5422E-03     -615.18     -4.9787     -12.366     -4.5131
  -0.2767     -0.1271      5.5881
   Pile N.      15           6           5           6          15          10
   15          10          11
      Max.    0.034394  2.0894E-03      319.79      112.31      16.279    0.075336
   0.3213    0.010731      12.142
   Pile N.       5          11          15           9           5           9
    5          11           5

     LOAD CASE :     5

     * TABLE L *   COMPUTATION ON PILE CAP

     * EQUIVALENT CONCENTRATED LOAD AT ORIGIN *
          LOAD X,KIP     LOAD Y,KIP     LOAD Z,KIP    MOM X,KIP-IN   MOM Y,KIP-IN
MOM Z,KIP-IN
               1986.29        30.9100        0.00000        0.00000        50386.2
     8261.37

     * DISPLACEMENT OF GROUPED PILE FOUNDATION AT ORIGIN *
           DISP X,IN      DISP Y,IN      DISP Z,IN      ROT X,RAD      ROT Y,RAD
  ROT Z,RAD
               0.10797    1.28064E-03    3.57830E-03   -1.30564E-06    1.84109E-04
 1.51835E-04

       * PILE TOP DISPLACEMENTS, GLOBAL *
                   DISP. X,IN   DISP. Y,IN   DISP. Z,IN   ROT. X,RAD   ROT. Y,RAD
```

```
ROT. Z,RAD
                    ***********  ***********  ***********  ***********  ***********
***********
       MINIMUM       0.065720   1.0456E-03   3.5000E-03  -1.3056E-06   1.8411E-04
1.5184E-04
       Pile N.         11            1           11            1            1
    1
       MAXIMUM         0.1502   1.5156E-03   3.6566E-03  -1.3056E-06   1.8411E-04
1.5184E-04
       Pile N.          5            5            1            1            1
    1

       * PILE TOP REACTIONS, GLOBAL *
                     FOR. X,KIP   FOR. Y,KIP   FOR. Z,KIP MOM X,KIP-IN MOM Y,KIP-IN
MOM Z,KIP-IN
                    ***********  ***********  ***********  ***********  ***********
***********
       MINIMUM         85.191      -14.528      -0.4600      -5.8208       37.391
  -223.29
       Pile N.         11            5            8           11            3
   15
       MAXIMUM         179.82       15.928      -0.1071       4.8827       126.79
   536.64
       Pile N.          5           15            1            1           10
    5

       * PILE TOP DISPLACEMENTS, LOCAL *
                     DISP. x,IN   DISP. y,IN   DISP. z,IN   ROT. x,RAD   ROT. y,RAD
ROT. z,RAD
                    ***********  ***********  ***********  ***********  ***********
***********
       MINIMUM       0.064998    -0.020200  -1.5156E-03  -3.1548E-05   1.5184E-04
-1.8411E-04
       Pile N.         11           15           10            1            6
    6
       MAXIMUM         0.1479     0.026185   3.6566E-03   2.8972E-05   1.8182E-04
1.5184E-04
       Pile N.          5            5            1           11           11
    1

       * PILE TOP REACTIONS, LOCAL *
                     AXIAL,KIP    LAT. y,KIP   LAT. z,KIP MOM x,KIP-IN MOM y,KIP-IN
MOM z,KIP-IN
                    ***********  ***********  ***********  ***********  ***********
***********
       MINIMUM         85.386      -10.505      -4.5586      -1.3629       37.679
  -223.29
       Pile N.         11           15           10            1            3
   15
       MAXIMUM         179.76       15.225      -0.1071       1.2517       113.26
```

```
   536.64
       Pile N.          5            5            1           11           10
    5

       * EFFECTS FOR LATERALLY LOADED PILE *

     PILE     DISPL.      DISPL.      MOMENT      MOMENT       SHEAR       SHEAR
SOIL REACT  SOIL REACT     TOTAL
               y-DIR       z-DIR       z-DIR       y-DIR       y-DIR       z-DIR
  y-DIR       z-DIR      STRESS
                IN          IN        KIP-IN      KIP-IN        KIP         KIP
 KIP/IN      KIP/IN     KIP/IN**2
    ******  **********  **********  **********  **********  **********  **********
**********  **********  **********
      Min.   -0.020200 -2.6025E-03     -536.64     -5.3883     -9.9946     -4.4897
  -0.2352     -0.1312      3.0199
   Pile N.      15          10           5          10          15          10
   15          10          11
      Max.    0.026863  3.6566E-03      223.29      113.26      14.625    0.078890
   0.2962    0.034100      9.7531
   Pile N.       5           1          15          10           5          10
    5          11           5

     LOAD CASE :     6

     * TABLE L *   COMPUTATION ON PILE CAP

     * EQUIVALENT CONCENTRATED LOAD AT ORIGIN *
          LOAD X,KIP     LOAD Y,KIP     LOAD Z,KIP    MOM X,KIP-IN   MOM Y,KIP-IN
MOM Z,KIP-IN
               2240.76        30.9100        0.00000        0.00000        38171.4
     8261.37

     * DISPLACEMENT OF GROUPED PILE FOUNDATION AT ORIGIN *
           DISP X,IN      DISP Y,IN      DISP Z,IN      ROT X,RAD      ROT Y,RAD
  ROT Z,RAD
               0.12338    1.08441E-03    2.28564E-03    6.28698E-08    1.38691E-04
 1.53578E-04

       * PILE TOP DISPLACEMENTS, GLOBAL *
                   DISP. X,IN   DISP. Y,IN   DISP. Z,IN   ROT. X,RAD   ROT. Y,RAD
ROT. Z,RAD
                  ***********  ***********  ***********  ***********  ***********
***********
       MINIMUM       0.089199   1.0731E-03   2.2819E-03   6.2870E-08   1.3869E-04
1.5358E-04
       Pile N.         11           5            1            1            1
    1
       MAXIMUM         0.1576   1.0957E-03   2.2894E-03   6.2870E-08   1.3869E-04
1.5358E-04
```

```
       Pile N.          5            1           11            1            1
    1

       * PILE TOP REACTIONS, GLOBAL *
                    FOR. X,KIP   FOR. Y,KIP   FOR. Z,KIP MOM X,KIP-IN MOM Y,KIP-IN
MOM Z,KIP-IN
                   ***********  ***********  ***********  ***********  ***********
***********
       MINIMUM         111.51      -15.584      -0.8440      -4.9839       32.086
  -246.75
       Pile N.         11            5            6           11            3
   15
       MAXIMUM         188.09       16.503      -0.3055       4.4218       109.23
   548.70
       Pile N.          5           15            1            1           10
    5

       * PILE TOP DISPLACEMENTS, LOCAL *
                    DISP. x,IN   DISP. y,IN   DISP. z,IN   ROT. x,RAD   ROT. y,RAD
ROT. z,RAD
                   ***********  ***********  ***********  ***********  ***********
***********
       MINIMUM       0.088166    -0.021809  -1.0957E-03  -2.2733E-05   1.3679E-04
-1.3869E-04
       Pile N.         11           15            6            1           11
    6
       MAXIMUM         0.1552     0.026954   2.2894E-03   2.2857E-05   1.5358E-04
1.5358E-04
       Pile N.          5            5           11           11            6
    1

       * PILE TOP REACTIONS, LOCAL *
                    AXIAL,KIP    LAT. y,KIP   LAT. z,KIP MOM x,KIP-IN MOM y,KIP-IN
MOM z,KIP-IN
                   ***********  ***********  ***********  ***********  ***********
***********
       MINIMUM         111.78      -11.242      -4.4828      -0.9821       32.365
  -246.75
       Pile N.         11           15           10            1            3
   15
       MAXIMUM         188.09       15.542      -0.3055       0.9875       110.55
   548.70
       Pile N.          5            5            1           11           10
    5

       * EFFECTS FOR LATERALLY LOADED PILE *

     PILE     DISPL.      DISPL.      MOMENT      MOMENT       SHEAR       SHEAR
SOIL REACT  SOIL REACT     TOTAL
               y-DIR       z-DIR       z-DIR       y-DIR       y-DIR       z-DIR
```

```
  y-DIR       z-DIR      STRESS
                IN          IN        KIP-IN      KIP-IN        KIP         KIP
 KIP/IN      KIP/IN     KIP/IN**2
    ******  **********  **********  **********  **********  **********  **********
**********  **********  **********
      Min.   -0.021808 -2.3115E-03     -548.70     -4.8086     -10.691     -4.4273
  -0.2485     -0.1251      3.9534
   Pile N.      15           6           5          10          15          10
   15          10          11
      Max.    0.027633  2.2894E-03      246.75      110.55      14.925    0.073146
   0.3013    0.016016      10.096
   Pile N.       5          11          15          10           5          10
    5          11           5

     LOAD CASE :     7

     * TABLE L *   COMPUTATION ON PILE CAP

     * EQUIVALENT CONCENTRATED LOAD AT ORIGIN *
          LOAD X,KIP     LOAD Y,KIP     LOAD Z,KIP    MOM X,KIP-IN   MOM Y,KIP-IN
MOM Z,KIP-IN
               2183.55        29.1900       -44.5700        0.00000        22034.8
     4350.02

     * DISPLACEMENT OF GROUPED PILE FOUNDATION AT ORIGIN *
           DISP X,IN      DISP Y,IN      DISP Z,IN      ROT X,RAD      ROT Y,RAD
  ROT Z,RAD
               0.11994    1.76581E-03   -2.25184E-03    4.68127E-07    7.73709E-05
 7.88437E-05

       * PILE TOP DISPLACEMENTS, GLOBAL *
                   DISP. X,IN   DISP. Y,IN   DISP. Z,IN   ROT. X,RAD   ROT. Y,RAD
ROT. Z,RAD
                  ***********  ***********  ***********  ***********  ***********
***********
       MINIMUM         0.1013   1.6815E-03  -2.2799E-03   4.6813E-07   7.7371E-05
7.8844E-05
       Pile N.         11           5           1           1           1
    1
       MAXIMUM         0.1386   1.8501E-03  -2.2238E-03   4.6813E-07   7.7371E-05
7.8844E-05
       Pile N.          5           1          11           1           1
    1

       * PILE TOP REACTIONS, GLOBAL *
                   FOR. X,KIP   FOR. Y,KIP   FOR. Z,KIP MOM X,KIP-IN MOM Y,KIP-IN
MOM Z,KIP-IN
                  ***********  ***********  ***********  ***********  ***********
***********
       MINIMUM         125.17      -13.629      -5.1962      -8.7945       48.832
```

```
  -271.20
      Pile N.         11            5           10           11            3
   15
      MAXIMUM         166.70       15.285      -1.5455       7.8252       160.43
   460.05
      Pile N.          5           15            3            1           10
    5

      * PILE TOP DISPLACEMENTS, LOCAL *
                   DISP. x,IN   DISP. y,IN   DISP. z,IN   ROT. x,RAD   ROT. y,RAD
ROT. z,RAD
                  ***********  ***********  ***********  ***********  ***********
***********
      MINIMUM         0.1002    -0.019565  -2.2799E-03  -1.2255E-05   7.6242E-05
-7.7371E-05
      Pile N.         11           15            1            1           11
    6
      MAXIMUM         0.1364     0.024438  -1.6815E-03   1.3178E-05   7.8844E-05
7.8844E-05
      Pile N.          5            5           10           11            6
    1

      * PILE TOP REACTIONS, LOCAL *
                   AXIAL,KIP    LAT. y,KIP   LAT. z,KIP MOM x,KIP-IN MOM y,KIP-IN
MOM z,KIP-IN
                  ***********  ***********  ***********  ***********  ***********
***********
      MINIMUM         125.49      -10.625      -3.0403      -0.5294       49.417
  -271.20
      Pile N.         11           15            9            1            3
   15
      MAXIMUM         166.68       13.955      -1.5455       0.5693       70.140
   460.05
      Pile N.          5            5            3           11            9
    5

      * EFFECTS FOR LATERALLY LOADED PILE *

     PILE     DISPL.      DISPL.      MOMENT      MOMENT       SHEAR       SHEAR
SOIL REACT  SOIL REACT     TOTAL
               y-DIR       z-DIR       z-DIR       y-DIR       y-DIR       z-DIR
  y-DIR       z-DIR      STRESS
                IN          IN        KIP-IN      KIP-IN        KIP         KIP
 KIP/IN      KIP/IN     KIP/IN**2
    ******  **********  **********  **********  **********  **********  **********
**********  **********  **********
      Min.   -0.019565 -2.9011E-03     -460.05     -4.9675     -10.152     -2.9491
  -0.2268   -0.081828      4.4385
   Pile N.      15           3           5          11          15           9
   15           9          11
```

```
      Max.    0.024551  1.0731E-04      271.20      70.140      13.387    0.086513
   0.2770  1.4701E-03      8.9156
   Pile N.       5          11          15           9           5          11
    5           6           5

     LOAD CASE :     8

     * TABLE L *   COMPUTATION ON PILE CAP

     * EQUIVALENT CONCENTRATED LOAD AT ORIGIN *
          LOAD X,KIP     LOAD Y,KIP     LOAD Z,KIP    MOM X,KIP-IN   MOM Y,KIP-IN
MOM Z,KIP-IN
               2183.55        29.1900       -44.5700        0.00000        22034.8
     4350.02

     * DISPLACEMENT OF GROUPED PILE FOUNDATION AT ORIGIN *
           DISP X,IN      DISP Y,IN      DISP Z,IN      ROT X,RAD      ROT Y,RAD
  ROT Z,RAD
               0.11994    1.76581E-03   -2.25184E-03    4.68127E-07    7.73709E-05
 7.88437E-05

       * PILE TOP DISPLACEMENTS, GLOBAL *
                   DISP. X,IN   DISP. Y,IN   DISP. Z,IN   ROT. X,RAD   ROT. Y,RAD
ROT. Z,RAD
                  ***********  ***********  ***********  ***********  ***********
***********
       MINIMUM         0.1013   1.6815E-03  -2.2799E-03   4.6813E-07   7.7371E-05
7.8844E-05
       Pile N.         11            5            1            1            1
    1
       MAXIMUM         0.1386   1.8501E-03  -2.2238E-03   4.6813E-07   7.7371E-05
7.8844E-05
       Pile N.          5            1           11            1            1
    1

       * PILE TOP REACTIONS, GLOBAL *
                   FOR. X,KIP   FOR. Y,KIP   FOR. Z,KIP MOM X,KIP-IN MOM Y,KIP-IN
MOM Z,KIP-IN
                  ***********  ***********  ***********  ***********  ***********
***********
       MINIMUM         125.17      -13.629      -5.1962      -8.7945       48.832
  -271.20
       Pile N.         11            5           10           11            3
   15
       MAXIMUM         166.70       15.285      -1.5455       7.8252       160.43
   460.05
       Pile N.          5           15            3            1           10
    5

       * PILE TOP DISPLACEMENTS, LOCAL *
```

```
                    DISP. x,IN   DISP. y,IN   DISP. z,IN   ROT. x,RAD   ROT. y,RAD
ROT. z,RAD
                   ***********  ***********  ***********  ***********  ***********
***********
       MINIMUM         0.1002    -0.019565  -2.2799E-03  -1.2255E-05   7.6242E-05
-7.7371E-05
       Pile N.         11           15            1            1           11
    6
       MAXIMUM         0.1364     0.024438  -1.6815E-03   1.3178E-05   7.8844E-05
7.8844E-05
       Pile N.          5            5           10           11            6
    1

       * PILE TOP REACTIONS, LOCAL *
                    AXIAL,KIP    LAT. y,KIP   LAT. z,KIP MOM x,KIP-IN MOM y,KIP-IN
MOM z,KIP-IN
                   ***********  ***********  ***********  ***********  ***********
***********
       MINIMUM         125.49      -10.625      -3.0403      -0.5294       49.417
  -271.20
       Pile N.         11           15            9            1            3
   15
       MAXIMUM         166.68       13.955      -1.5455       0.5693       70.140
   460.05
       Pile N.          5            5            3           11            9
    5

       * EFFECTS FOR LATERALLY LOADED PILE *

     PILE     DISPL.      DISPL.      MOMENT      MOMENT       SHEAR       SHEAR
SOIL REACT  SOIL REACT     TOTAL
               y-DIR       z-DIR       z-DIR       y-DIR       y-DIR       z-DIR
  y-DIR       z-DIR      STRESS
                IN          IN        KIP-IN      KIP-IN        KIP         KIP
 KIP/IN      KIP/IN     KIP/IN**2
    ******  **********  **********  **********  **********  **********  **********
**********  **********  **********
      Min.   -0.019565 -2.9011E-03     -460.05     -4.9675     -10.152     -2.9491
  -0.2268   -0.081828      4.4385
   Pile N.      15           3           5          11          15           9
   15           9          11
      Max.    0.024551  1.0731E-04      271.20      70.140      13.387    0.086513
   0.2770  1.4701E-03      8.9156
   Pile N.       5          11          15           9           5          11
    5           6           5

     LOAD CASE :     9

     * TABLE L *   COMPUTATION ON PILE CAP
```

```
     * EQUIVALENT CONCENTRATED LOAD AT ORIGIN *
           LOAD X,KIP     LOAD Y,KIP     LOAD Z,KIP    MOM X,KIP-IN   MOM Y,KIP-IN
MOM Z,KIP-IN
               2701.98        30.9100        0.00000        0.00000        0.00000
     8261.37

     * DISPLACEMENT OF GROUPED PILE FOUNDATION AT ORIGIN *
            DISP X,IN      DISP Y,IN      DISP Z,IN      ROT X,RAD      ROT Y,RAD
  ROT Z,RAD
               0.15155   -1.19633E-03   -7.42048E-19    6.84141E-21   -1.61158E-20
 1.53492E-04

       * PILE TOP DISPLACEMENTS, GLOBAL *
                    DISP. X,IN   DISP. Y,IN   DISP. Z,IN   ROT. X,RAD   ROT. Y,RAD
ROT. Z,RAD
                  ***********  ***********  ***********  ***********  ***********
***********
       MINIMUM         0.1423  -1.1963E-03  -1.1525E-18   6.8414E-21  -1.6116E-20
1.5349E-04
       Pile N.         11            1            1            1            1
    1
       MAXIMUM         0.1608  -1.1963E-03  -3.3156E-19   6.8414E-21  -1.6116E-20
1.5349E-04
       Pile N.          1            1           11            1            1
    1

       * PILE TOP REACTIONS, GLOBAL *
                    FOR. X,KIP   FOR. Y,KIP   FOR. Z,KIP MOM X,KIP-IN MOM Y,KIP-IN
MOM Z,KIP-IN
                  ***********  ***********  ***********  ***********  ***********
***********
       MINIMUM         170.05      -18.049  -5.4539E-14  -3.3421E-15  -3.7090E-15
  -208.36
       Pile N.         11            1            6            6           11
   11
       MAXIMUM         191.75       20.205   2.9965E-17   1.0362E-15   7.2499E-13
   501.77
       Pile N.          1           11           11            1            6
    1

       * PILE TOP DISPLACEMENTS, LOCAL *
                    DISP. x,IN   DISP. y,IN   DISP. z,IN   ROT. x,RAD   ROT. y,RAD
ROT. z,RAD
                  ***********  ***********  ***********  ***********  ***********
***********
       MINIMUM         0.1402    -0.024574  -1.1525E-18   4.0996E-21  -1.7021E-20
2.5514E-20
       Pile N.         11           11            1           11           11
    6
       MAXIMUM         0.1588     0.025242   1.1963E-03   1.6240E-20   1.5349E-04
```

```
1.5349E-04
       Pile N.          1            1            6            6            6
    1

       * PILE TOP REACTIONS, LOCAL *
                    AXIAL,KIP    LAT. y,KIP   LAT. z,KIP MOM x,KIP-IN MOM y,KIP-IN
MOM z,KIP-IN
                  ***********  ***********  ***********  ***********  ***********
***********
       MINIMUM         171.06      -8.0193      -1.4048   1.7711E-16  -3.7897E-15
  -208.36
       Pile N.         11           11            6           11           11
   11
       MAXIMUM         192.11       13.712   2.9965E-17   7.2761E-16       66.463
   501.77
       Pile N.          1            1           11            6            6
    1

       * EFFECTS FOR LATERALLY LOADED PILE *

     PILE     DISPL.      DISPL.      MOMENT      MOMENT       SHEAR       SHEAR
SOIL REACT  SOIL REACT     TOTAL
               y-DIR       z-DIR       z-DIR       y-DIR       y-DIR       z-DIR
  y-DIR       z-DIR      STRESS
                IN          IN        KIP-IN      KIP-IN        KIP         KIP
 KIP/IN      KIP/IN     KIP/IN**2
    ******  **********  **********  **********  **********  **********  **********
**********  **********  **********
      Min.   -0.024574 -9.2047E-04     -501.77     -2.1508     -7.6703     -1.7601
  -0.1612   -0.065968      6.0501
   Pile N.      11           6           1           6          11           6
   11           6          11
      Max.    0.025981  1.1963E-03      208.36      66.463      13.195    0.048492
   0.2620    0.061541      9.8802
   Pile N.       1           6          11           6           1           6
    1           6           1

     LOAD CASE :    10

     * TABLE L *   COMPUTATION ON PILE CAP

     * EQUIVALENT CONCENTRATED LOAD AT ORIGIN *
          LOAD X,KIP     LOAD Y,KIP     LOAD Z,KIP    MOM X,KIP-IN   MOM Y,KIP-IN
MOM Z,KIP-IN
               2701.98        30.9100        0.00000        0.00000        0.00000
     8261.37

     * DISPLACEMENT OF GROUPED PILE FOUNDATION AT ORIGIN *
           DISP X,IN      DISP Y,IN      DISP Z,IN      ROT X,RAD      ROT Y,RAD
  ROT Z,RAD
```

```
               0.15155   -1.19633E-03   -7.42048E-19    6.84141E-21   -1.61158E-20
 1.53492E-04

       * PILE TOP DISPLACEMENTS, GLOBAL *
                   DISP. X,IN   DISP. Y,IN   DISP. Z,IN   ROT. X,RAD   ROT. Y,RAD
ROT. Z,RAD
                  ***********  ***********  ***********  ***********  ***********
***********
       MINIMUM         0.1423  -1.1963E-03  -1.1525E-18   6.8414E-21  -1.6116E-20
1.5349E-04
       Pile N.         11            1            1            1            1
    1
       MAXIMUM         0.1608  -1.1963E-03  -3.3156E-19   6.8414E-21  -1.6116E-20
1.5349E-04
       Pile N.          1            1           11            1            1
    1

       * PILE TOP REACTIONS, GLOBAL *
                   FOR. X,KIP   FOR. Y,KIP   FOR. Z,KIP MOM X,KIP-IN MOM Y,KIP-IN
MOM Z,KIP-IN
                  ***********  ***********  ***********  ***********  ***********
***********
       MINIMUM         170.05      -18.049  -5.4539E-14  -3.3421E-15  -3.7090E-15
  -208.36
       Pile N.         11            1            6            6           11
   11
       MAXIMUM         191.75       20.205   2.9965E-17   1.0362E-15   7.2499E-13
   501.77
       Pile N.          1           11           11            1            6
    1

       * PILE TOP DISPLACEMENTS, LOCAL *
                   DISP. x,IN   DISP. y,IN   DISP. z,IN   ROT. x,RAD   ROT. y,RAD
ROT. z,RAD
                  ***********  ***********  ***********  ***********  ***********
***********
       MINIMUM         0.1402    -0.024574  -1.1525E-18   4.0996E-21  -1.7021E-20
2.5514E-20
       Pile N.         11           11            1           11           11
    6
       MAXIMUM         0.1588     0.025242   1.1963E-03   1.6240E-20   1.5349E-04
1.5349E-04
       Pile N.          1            1            6            6            6
    1

       * PILE TOP REACTIONS, LOCAL *
                   AXIAL,KIP    LAT. y,KIP   LAT. z,KIP MOM x,KIP-IN MOM y,KIP-IN
MOM z,KIP-IN
                  ***********  ***********  ***********  ***********  ***********
***********
```

```
      MINIMUM         171.06      -8.0193      -1.4048   1.7711E-16  -3.7897E-15
  -208.36
      Pile N.         11           11            6           11           11
   11
      MAXIMUM         192.11       13.712   2.9965E-17   7.2761E-16       66.463
   501.77
      Pile N.          1            1           11            6            6
    1

      * EFFECTS FOR LATERALLY LOADED PILE *

     PILE     DISPL.      DISPL.      MOMENT      MOMENT       SHEAR       SHEAR
SOIL REACT  SOIL REACT     TOTAL
               y-DIR       z-DIR       z-DIR       y-DIR       y-DIR       z-DIR
  y-DIR       z-DIR      STRESS
                IN          IN        KIP-IN      KIP-IN        KIP         KIP
 KIP/IN      KIP/IN     KIP/IN**2
    ******  **********  **********  **********  **********  **********  **********
**********  **********  **********
      Min.   -0.024574 -9.2047E-04     -501.77     -2.1508     -7.6703     -1.7601
  -0.1612   -0.065968      6.0501
   Pile N.      11           6           1           6          11           6
   11           6          11
      Max.    0.025981  1.1963E-03      208.36      66.463      13.195    0.048492
   0.2620    0.061541      9.8802
   Pile N.       1           6          11           6           1           6
    1           6           1

     LOAD CASE :    11

     * TABLE L *   COMPUTATION ON PILE CAP

     * EQUIVALENT CONCENTRATED LOAD AT ORIGIN *
          LOAD X,KIP     LOAD Y,KIP     LOAD Z,KIP    MOM X,KIP-IN   MOM Y,KIP-IN
MOM Z,KIP-IN
               2577.77        44.6400       -32.9700        0.00000        50000.7
     10259.6

     * DISPLACEMENT OF GROUPED PILE FOUNDATION AT ORIGIN *
           DISP X,IN      DISP Y,IN      DISP Z,IN      ROT X,RAD      ROT Y,RAD
  ROT Z,RAD
               0.14387    2.55853E-03    7.04477E-04    2.02478E-07    1.80997E-04
 1.92241E-04

      * PILE TOP DISPLACEMENTS, GLOBAL *
                   DISP. X,IN   DISP. Y,IN   DISP. Z,IN   ROT. X,RAD   ROT. Y,RAD
ROT. Z,RAD
                  ***********  ***********  ***********  ***********  ***********
***********
      MINIMUM       0.099756   2.5221E-03   6.9233E-04   2.0248E-07   1.8100E-04
```

```
1.9224E-04
       Pile N.         11            5            1            1            1
    1
       MAXIMUM         0.1880   2.5950E-03   7.1663E-04   2.0248E-07   1.8100E-04
1.9224E-04
       Pile N.          5            1           11            1            1
    1

       * PILE TOP REACTIONS, GLOBAL *
                    FOR. X,KIP   FOR. Y,KIP   FOR. Z,KIP MOM X,KIP-IN MOM Y,KIP-IN
MOM Z,KIP-IN
                  ***********  ***********  ***********  ***********  ***********
***********
       MINIMUM         123.34      -19.872      -3.8360      -11.008       58.348
  -232.42
       Pile N.         11            5           10           11            5
   15
       MAXIMUM         221.74       21.658      -1.1467       8.7751       193.80
   629.33
       Pile N.          5           15            5            1           10
    5

       * PILE TOP DISPLACEMENTS, LOCAL *
                    DISP. x,IN   DISP. y,IN   DISP. z,IN   ROT. x,RAD   ROT. y,RAD
ROT. z,RAD
                  ***********  ***********  ***********  ***********  ***********
***********
       MINIMUM       0.098826    -0.024618  -2.5950E-03  -2.9549E-05   1.7850E-04
-1.8100E-04
       Pile N.         11           15            6            1           11
    6
       MAXIMUM         0.1850     0.033385   7.1663E-04   2.9948E-05   1.9224E-04
1.9224E-04
       Pile N.          5            5           11           11            6
    1

       * PILE TOP REACTIONS, LOCAL *
                    AXIAL,KIP    LAT. y,KIP   LAT. z,KIP MOM x,KIP-IN MOM y,KIP-IN
MOM z,KIP-IN
                  ***********  ***********  ***********  ***********  ***********
***********
       MINIMUM         123.92      -10.891      -5.3939      -1.2766       58.939
  -232.42
       Pile N.         11           15           10            1            5
   15
       MAXIMUM         221.99       16.843      -1.1467       1.2938       136.02
   629.33
       Pile N.          5            5            5           11           10
    5
```

```
      * EFFECTS FOR LATERALLY LOADED PILE *

     PILE     DISPL.      DISPL.      MOMENT      MOMENT       SHEAR       SHEAR
SOIL REACT  SOIL REACT     TOTAL
               y-DIR       z-DIR       z-DIR       y-DIR       y-DIR       z-DIR
  y-DIR       z-DIR      STRESS
                IN          IN        KIP-IN      KIP-IN        KIP         KIP
 KIP/IN      KIP/IN     KIP/IN**2
    ******  **********  **********  **********  **********  **********  **********
**********  **********  **********
      Min.   -0.024617 -4.1271E-03     -629.33     -6.9188     -10.341     -5.2626
  -0.2396     -0.1391      4.3829
   Pile N.      15           6           5          10          15          10
   15          10          11
      Max.    0.034309  7.1663E-04      232.42      136.02      16.165      0.1025
   0.3155  4.0456E-03      11.918
   Pile N.       5          11          15          10           5          10
    5          11           5

     LOAD CASE :    12

     * TABLE L *   COMPUTATION ON PILE CAP

     * EQUIVALENT CONCENTRATED LOAD AT ORIGIN *
          LOAD X,KIP     LOAD Y,KIP     LOAD Z,KIP    MOM X,KIP-IN   MOM Y,KIP-IN
MOM Z,KIP-IN
               2774.08        44.6400       -32.9700        0.00000        40577.8
     10259.6

     * DISPLACEMENT OF GROUPED PILE FOUNDATION AT ORIGIN *
           DISP X,IN      DISP Y,IN      DISP Z,IN      ROT X,RAD      ROT Y,RAD
  ROT Z,RAD
               0.15582    2.14900E-03    2.58039E-05    3.98977E-07    1.46689E-04
 1.93465E-04

       * PILE TOP DISPLACEMENTS, GLOBAL *
                   DISP. X,IN   DISP. Y,IN   DISP. Z,IN   ROT. X,RAD   ROT. Y,RAD
ROT. Z,RAD
                  ***********  ***********  ***********  ***********  ***********
***********
       MINIMUM         0.1178   2.0772E-03   1.8653E-06   3.9898E-07   1.4669E-04
1.9347E-04
       Pile N.         11            5            1            1            1
    1
       MAXIMUM         0.1938   2.2208E-03   4.9743E-05   3.9898E-07   1.4669E-04
1.9347E-04
       Pile N.          5            1           11            1            1
    1

       * PILE TOP REACTIONS, GLOBAL *
```

```
                    FOR. X,KIP   FOR. Y,KIP   FOR. Z,KIP MOM X,KIP-IN MOM Y,KIP-IN
MOM Z,KIP-IN
                   ***********  ***********  ***********  ***********  ***********
***********
       MINIMUM         143.39      -21.209      -3.7410      -9.1692       50.976
  -231.61
       Pile N.         11            5           10           11            5
   15
       MAXIMUM         228.26       23.160      -1.0874       7.7121       170.81
   627.24
       Pile N.          5           15            5            1           10
    5

       * PILE TOP DISPLACEMENTS, LOCAL *
                    DISP. x,IN   DISP. y,IN   DISP. z,IN   ROT. x,RAD   ROT. y,RAD
ROT. z,RAD
                   ***********  ***********  ***********  ***********  ***********
***********
       MINIMUM         0.1166    -0.025993  -2.2208E-03  -2.3716E-05   1.4463E-04
-1.4669E-04
       Pile N.         11           15            6            1           11
    6
       MAXIMUM         0.1908     0.033906   4.9743E-05   2.4503E-05   1.9347E-04
1.9347E-04
       Pile N.          5            5           11           11            6
    1

       * PILE TOP REACTIONS, LOCAL *
                    AXIAL,KIP    LAT. y,KIP   LAT. z,KIP MOM x,KIP-IN MOM y,KIP-IN
MOM z,KIP-IN
                   ***********  ***********  ***********  ***********  ***********
***********
       MINIMUM         144.13      -10.421      -4.9449      -1.0246       51.508
  -231.61
       Pile N.         11           15           10            1            5
   15
       MAXIMUM         228.64       16.595      -1.0874       1.0586       128.94
   627.24
       Pile N.          5            5            5           11           10
    5

       * EFFECTS FOR LATERALLY LOADED PILE *

     PILE     DISPL.      DISPL.      MOMENT      MOMENT       SHEAR       SHEAR
SOIL REACT  SOIL REACT     TOTAL
               y-DIR       z-DIR       z-DIR       y-DIR       y-DIR       z-DIR
  y-DIR       z-DIR      STRESS
                IN          IN        KIP-IN      KIP-IN        KIP         KIP
 KIP/IN      KIP/IN     KIP/IN**2
    ******  **********  **********  **********  **********  **********  **********
```

```
**********  **********  **********
      Min.   -0.025993 -3.8404E-03     -627.24     -6.3688     -9.9040     -4.8459
  -0.2256     -0.1266      5.0977
   Pile N.      15           6           5           9          15          10
   15          10          11
      Max.    0.034845  1.0367E-04      231.61      128.94      15.932    0.097723
   0.3087  1.9375E-03      12.095
   Pile N.       5           5          15          10           5           9
    5           6           5
```

PILE FOUNDATION ANALYSIS

SUMMARY OF GROUP RESULTS

P-MULTIPLIERS

GROUP ANALYSIS

DEPTH TO FIXITY

PILE HEAD FIXED CASE – INPUT

PILE HEAD FIXED CASE – OUTPUT

PILE HEAD PINNED CASE – INPUT

PILE HEAD PINNED CASE - OUTPUT

```
==========================================================================

                 GROUP for Windows, Version 2019.11.10

                  Serial Number : 235486675

                  Analysis of A Group of Piles
               Subjected to Axial and Lateral Loading

                (c) Copyright ENSOFT, Inc., 1987-2018
                      All Rights Reserved

==========================================================================


This program is licensed to :

KC Engineering & Land Surveying
New York, NY, USA

Path to file locations      : P:\120179-NYSTA_D214866_TermBridge\Task_2\50
Design Documents\Geotech\Pier_Foundation_Design\GROUP_Model\Updated Uniform 3x5\
Name of input data file     : Pier_updateduniform3x5_Pinned.gp11r
Name of output echo file    : Pier_updateduniform3x5_Pinned.gp11e
Name of output results file : Pier_updateduniform3x5_Pinned.gp11o
Name of output summary file : Pier_updateduniform3x5_Pinned.gp11t
Name of plot output file    : Pier_updateduniform3x5_Pinned.gp11p
Name of runtime file        : Pier_updateduniform3x5_Pinned.gp11r


--------------------------------------------------------------------------
                      Time and Date of Analysis
--------------------------------------------------------------------------

          Date:  August 29, 2025     Time:  12:45:36





           *****     INPUT INFORMATION     *****


New Group


ANALYSIS TYPE = 3D ANALYSIS

ADJUST DEPTH FOR BATTER PILES
```

```
GENERATE LOAD-DISP (AND T-R) CURVES BASED ON SOIL PROFILE

EXTEND INTERPOLATION FOR L-DP (AND T-R) CURVES

UNITS SYSTEM  = ENGL



* TABLE B *  PILE CAP OPTIONS

LENGTH,YY    ( FT ) =    12.00
WIDTH, ZZ    ( FT ) =    33.00
THICKNESS,XX ( FT ) =    4.000

* PILE CAP IS EMBEDDED AND PASSIVE EARTH
  RESISTANCE IN FRONT OF PILE CAP WILL BE CONSIDERED




* TABLE C *  LOAD AND CONTROL PARAMETERS


** LOAD CASES **


NUMBER OF LOAD CASES :   12


LOAD CASE    :     1
CASE NAME    : SER-L1

LOAD TYPE    : Dead, DL
SCALE FACTOR :       1.0000

* CONCENTRATED LOADS *

    NL  VERT.LOAD HR.LOAD Y HR.LOAD Z  MOMENT X  MOMENT Y  MOMENT Z   COORD X
COORD Y   COORD Z
           KIP       KIP       KIP      KIP-IN    KIP-IN    KIP-IN      FT        FT
       FT
     1   2.02E+03      44.8     -27.9      0.00  3.84E+04  1.07E+04      0.00
0.00      0.00


* EQUIVALENT CONCENTRATED LOAD AT ORIGIN *

       VER.LOAD X,KIP     HOR.LOAD Y,KIP     HOR.LOAD Z,KIP
              2023.07           44.8400          -27.9100
```

```
        MOMENT X,KIP-IN    MOMENT Y,KIP-IN    MOMENT Z,KIP-IN
               0.00000           38374.6           10703.2


     * THE LOADING IS STATIC *


     * CONTROL PARAMETERS *
         TOLERANCE ON CONVERGENCE OF PILE CAP MOVEMENT        =  0.10000
         TOLERANCE ON DETERMINATION OF PILE DEFLECTIONS       =  0.10000     IN
         MAX NO OF ITERATIONS ALLOWED FOR FOUNDATION ANALYSIS =      100
         MAXIMUM NO OF ITERATIONS ALLOWED FOR PILE ANALYSIS   =      100
         FACTOR TO APPLY THE LOAD IN INCREMENTS               =   1.0000
         MINIMUM FACTOR FOR LOAD INCREMENTS                   =   1.0000
         PRINT RESULTS ONLY AT PILE CAP


     LOAD CASE    :     2
     CASE NAME    : SER-L2

     LOAD TYPE    : Dead, DL
     SCALE FACTOR :       1.0000

     * CONCENTRATED LOADS *

    NL  VERT.LOAD HR.LOAD Y HR.LOAD Z  MOMENT X  MOMENT Y  MOMENT Z   COORD X
COORD Y   COORD Z
           KIP       KIP       KIP      KIP-IN    KIP-IN    KIP-IN      FT        FT
       FT
     1   2.17E+03      44.8     -27.9      0.00  3.14E+04  1.07E+04      0.00
0.00      0.00


     * EQUIVALENT CONCENTRATED LOAD AT ORIGIN *

        VER.LOAD X,KIP     HOR.LOAD Y,KIP     HOR.LOAD Z,KIP
               2168.48           44.8400          -27.9100

        MOMENT X,KIP-IN    MOMENT Y,KIP-IN    MOMENT Z,KIP-IN
               0.00000           31394.6           10703.2


     * THE LOADING IS STATIC *


     * CONTROL PARAMETERS *
         TOLERANCE ON CONVERGENCE OF PILE CAP MOVEMENT        =  0.10000
         TOLERANCE ON DETERMINATION OF PILE DEFLECTIONS       =  0.10000     IN
         MAX NO OF ITERATIONS ALLOWED FOR FOUNDATION ANALYSIS =      100
```

```
        MAXIMUM NO OF ITERATIONS ALLOWED FOR PILE ANALYSIS   =      100
        FACTOR TO APPLY THE LOAD IN INCREMENTS               =   1.0000
        MINIMUM FACTOR FOR LOAD INCREMENTS                   =   1.0000
        PRINT RESULTS ONLY AT PILE CAP


    LOAD CASE    :     3
    CASE NAME    : STR I Max-L1

    LOAD TYPE    : Dead, DL
    SCALE FACTOR :       1.0000

    * CONCENTRATED LOADS *

   NL  VERT.LOAD HR.LOAD Y HR.LOAD Z  MOMENT X  MOMENT Y  MOMENT Z   COORD X
COORD Y   COORD Z
          KIP       KIP       KIP      KIP-IN    KIP-IN    KIP-IN      FT        FT
      FT
    1   2.67E+03      30.9      0.00      0.00  5.04E+04  8.26E+03      0.00
0.00      0.00


    * EQUIVALENT CONCENTRATED LOAD AT ORIGIN *

          VER.LOAD X,KIP     HOR.LOAD Y,KIP     HOR.LOAD Z,KIP
                 2665.02           30.9100           0.00000

          MOMENT X,KIP-IN    MOMENT Y,KIP-IN    MOMENT Z,KIP-IN
                 0.00000           50386.2           8261.37


    * THE LOADING IS STATIC *


    * CONTROL PARAMETERS *
        TOLERANCE ON CONVERGENCE OF PILE CAP MOVEMENT        =  0.10000
        TOLERANCE ON DETERMINATION OF PILE DEFLECTIONS       =  0.10000     IN
        MAX NO OF ITERATIONS ALLOWED FOR FOUNDATION ANALYSIS =      100
        MAXIMUM NO OF ITERATIONS ALLOWED FOR PILE ANALYSIS   =      100
        FACTOR TO APPLY THE LOAD IN INCREMENTS               =   1.0000
        MINIMUM FACTOR FOR LOAD INCREMENTS                   =   1.0000
        PRINT RESULTS ONLY AT PILE CAP


    LOAD CASE    :     4
    CASE NAME    : STR I Max-L2

    LOAD TYPE    : Dead, DL
    SCALE FACTOR :       1.0000
```

```
     * CONCENTRATED LOADS *

    NL  VERT.LOAD HR.LOAD Y HR.LOAD Z  MOMENT X  MOMENT Y  MOMENT Z   COORD X
COORD Y   COORD Z
           KIP       KIP       KIP      KIP-IN    KIP-IN    KIP-IN      FT        FT
       FT
     1   2.92E+03      30.9      0.00      0.00  3.82E+04  8.26E+03      0.00
0.00      0.00


     * EQUIVALENT CONCENTRATED LOAD AT ORIGIN *

            VER.LOAD X,KIP     HOR.LOAD Y,KIP     HOR.LOAD Z,KIP
                   2919.49           30.9100           0.00000

            MOMENT X,KIP-IN    MOMENT Y,KIP-IN    MOMENT Z,KIP-IN
                   0.00000           38171.4           8261.37


     * THE LOADING IS STATIC *


     * CONTROL PARAMETERS *
         TOLERANCE ON CONVERGENCE OF PILE CAP MOVEMENT        =  0.10000
         TOLERANCE ON DETERMINATION OF PILE DEFLECTIONS       =  0.10000     IN
         MAX NO OF ITERATIONS ALLOWED FOR FOUNDATION ANALYSIS =      100
         MAXIMUM NO OF ITERATIONS ALLOWED FOR PILE ANALYSIS   =      100
         FACTOR TO APPLY THE LOAD IN INCREMENTS               =   1.0000
         MINIMUM FACTOR FOR LOAD INCREMENTS                   =   1.0000
         PRINT RESULTS ONLY AT PILE CAP


     LOAD CASE    :     5
     CASE NAME    : STR I Min-L1

     LOAD TYPE    : Dead, DL
     SCALE FACTOR :       1.0000

     * CONCENTRATED LOADS *

    NL  VERT.LOAD HR.LOAD Y HR.LOAD Z  MOMENT X  MOMENT Y  MOMENT Z   COORD X
COORD Y   COORD Z
           KIP       KIP       KIP      KIP-IN    KIP-IN    KIP-IN      FT        FT
       FT
     1   1.99E+03      30.9      0.00      0.00  5.04E+04  8.26E+03      0.00
0.00      0.00


     * EQUIVALENT CONCENTRATED LOAD AT ORIGIN *
```

```
        VER.LOAD X,KIP     HOR.LOAD Y,KIP     HOR.LOAD Z,KIP
               1986.29           30.9100           0.00000

        MOMENT X,KIP-IN    MOMENT Y,KIP-IN    MOMENT Z,KIP-IN
               0.00000           50386.2           8261.37


     * THE LOADING IS STATIC *


     * CONTROL PARAMETERS *
         TOLERANCE ON CONVERGENCE OF PILE CAP MOVEMENT        =  0.10000
         TOLERANCE ON DETERMINATION OF PILE DEFLECTIONS       =  0.10000     IN
         MAX NO OF ITERATIONS ALLOWED FOR FOUNDATION ANALYSIS =      100
         MAXIMUM NO OF ITERATIONS ALLOWED FOR PILE ANALYSIS   =      100
         FACTOR TO APPLY THE LOAD IN INCREMENTS               =   1.0000
         MINIMUM FACTOR FOR LOAD INCREMENTS                   =   1.0000
         PRINT RESULTS ONLY AT PILE CAP


     LOAD CASE    :     6
     CASE NAME    : STR I Min-L2

     LOAD TYPE    : Dead, DL
     SCALE FACTOR :       1.0000

     * CONCENTRATED LOADS *

    NL  VERT.LOAD HR.LOAD Y HR.LOAD Z  MOMENT X  MOMENT Y  MOMENT Z   COORD X
COORD Y   COORD Z
           KIP       KIP       KIP      KIP-IN    KIP-IN    KIP-IN      FT        FT
       FT
     1   2.24E+03      30.9      0.00      0.00  3.82E+04  8.26E+03      0.00
0.00      0.00


     * EQUIVALENT CONCENTRATED LOAD AT ORIGIN *

        VER.LOAD X,KIP     HOR.LOAD Y,KIP     HOR.LOAD Z,KIP
               2240.76           30.9100           0.00000

        MOMENT X,KIP-IN    MOMENT Y,KIP-IN    MOMENT Z,KIP-IN
               0.00000           38171.4           8261.37


     * THE LOADING IS STATIC *


     * CONTROL PARAMETERS *
         TOLERANCE ON CONVERGENCE OF PILE CAP MOVEMENT        =  0.10000
```

```
        TOLERANCE ON DETERMINATION OF PILE DEFLECTIONS       =  0.10000     IN
        MAX NO OF ITERATIONS ALLOWED FOR FOUNDATION ANALYSIS =      100
        MAXIMUM NO OF ITERATIONS ALLOWED FOR PILE ANALYSIS   =      100
        FACTOR TO APPLY THE LOAD IN INCREMENTS               =   1.0000
        MINIMUM FACTOR FOR LOAD INCREMENTS                   =   1.0000
        PRINT RESULTS ONLY AT PILE CAP


    LOAD CASE    :     7
    CASE NAME    : STR III-L1

    LOAD TYPE    : Dead, DL
    SCALE FACTOR :       1.0000

    * CONCENTRATED LOADS *

   NL  VERT.LOAD HR.LOAD Y HR.LOAD Z  MOMENT X  MOMENT Y  MOMENT Z   COORD X
COORD Y   COORD Z
           KIP       KIP       KIP      KIP-IN    KIP-IN    KIP-IN      FT        FT
      FT
    1   2.18E+03      29.2     -44.6      0.00  2.20E+04  4.35E+03      0.00
0.00      0.00


    * EQUIVALENT CONCENTRATED LOAD AT ORIGIN *

          VER.LOAD X,KIP     HOR.LOAD Y,KIP     HOR.LOAD Z,KIP
                 2183.55           29.1900          -44.5700

          MOMENT X,KIP-IN    MOMENT Y,KIP-IN    MOMENT Z,KIP-IN
                 0.00000           22034.8           4350.02


    * THE LOADING IS STATIC *


    * CONTROL PARAMETERS *
        TOLERANCE ON CONVERGENCE OF PILE CAP MOVEMENT        =  0.10000
        TOLERANCE ON DETERMINATION OF PILE DEFLECTIONS       =  0.10000     IN
        MAX NO OF ITERATIONS ALLOWED FOR FOUNDATION ANALYSIS =      100
        MAXIMUM NO OF ITERATIONS ALLOWED FOR PILE ANALYSIS   =      100
        FACTOR TO APPLY THE LOAD IN INCREMENTS               =   1.0000
        MINIMUM FACTOR FOR LOAD INCREMENTS                   =   1.0000
        PRINT RESULTS ONLY AT PILE CAP


    LOAD CASE    :     8
    CASE NAME    : STR III-L2

    LOAD TYPE    : Dead, DL
```

```
     SCALE FACTOR :       1.0000

     * CONCENTRATED LOADS *

    NL  VERT.LOAD HR.LOAD Y HR.LOAD Z  MOMENT X  MOMENT Y  MOMENT Z   COORD X
COORD Y   COORD Z
           KIP       KIP       KIP      KIP-IN    KIP-IN    KIP-IN      FT        FT
       FT
     1   2.18E+03      29.2     -44.6      0.00  2.20E+04  4.35E+03      0.00
0.00      0.00


     * EQUIVALENT CONCENTRATED LOAD AT ORIGIN *

            VER.LOAD X,KIP     HOR.LOAD Y,KIP     HOR.LOAD Z,KIP
                   2183.55           29.1900          -44.5700

            MOMENT X,KIP-IN    MOMENT Y,KIP-IN    MOMENT Z,KIP-IN
                   0.00000           22034.8           4350.02


     * THE LOADING IS STATIC *


     * CONTROL PARAMETERS *
         TOLERANCE ON CONVERGENCE OF PILE CAP MOVEMENT        =  0.10000
         TOLERANCE ON DETERMINATION OF PILE DEFLECTIONS       =  0.10000     IN
         MAX NO OF ITERATIONS ALLOWED FOR FOUNDATION ANALYSIS =      100
         MAXIMUM NO OF ITERATIONS ALLOWED FOR PILE ANALYSIS   =      100
         FACTOR TO APPLY THE LOAD IN INCREMENTS               =   1.0000
         MINIMUM FACTOR FOR LOAD INCREMENTS                   =   1.0000
         PRINT RESULTS ONLY AT PILE CAP


     LOAD CASE    :     9
     CASE NAME    : STR IV-L1

     LOAD TYPE    : Dead, DL
     SCALE FACTOR :       1.0000

     * CONCENTRATED LOADS *

    NL  VERT.LOAD HR.LOAD Y HR.LOAD Z  MOMENT X  MOMENT Y  MOMENT Z   COORD X
COORD Y   COORD Z
           KIP       KIP       KIP      KIP-IN    KIP-IN    KIP-IN      FT        FT
       FT
     1   2.70E+03      30.9      0.00      0.00      0.00  8.26E+03      0.00
0.00      0.00
```

```
* EQUIVALENT CONCENTRATED LOAD AT ORIGIN *

      VER.LOAD X,KIP     HOR.LOAD Y,KIP     HOR.LOAD Z,KIP
             2701.98           30.9100           0.00000

      MOMENT X,KIP-IN    MOMENT Y,KIP-IN    MOMENT Z,KIP-IN
             0.00000           0.00000           8261.37


* THE LOADING IS STATIC *


* CONTROL PARAMETERS *
    TOLERANCE ON CONVERGENCE OF PILE CAP MOVEMENT        =  0.10000
    TOLERANCE ON DETERMINATION OF PILE DEFLECTIONS       =  0.10000     IN
    MAX NO OF ITERATIONS ALLOWED FOR FOUNDATION ANALYSIS =      100
    MAXIMUM NO OF ITERATIONS ALLOWED FOR PILE ANALYSIS   =      100
    FACTOR TO APPLY THE LOAD IN INCREMENTS               =   1.0000
    MINIMUM FACTOR FOR LOAD INCREMENTS                   =   1.0000
    PRINT RESULTS ONLY AT PILE CAP


LOAD CASE    :    10
CASE NAME    : STR IV-L2

LOAD TYPE    : Dead, DL
SCALE FACTOR :       1.0000

* CONCENTRATED LOADS *

   NL  VERT.LOAD HR.LOAD Y HR.LOAD Z  MOMENT X  MOMENT Y  MOMENT Z   COORD X
COORD Y   COORD Z
          KIP       KIP       KIP      KIP-IN    KIP-IN    KIP-IN      FT        FT
      FT
    1   2.70E+03      30.9      0.00      0.00      0.00  8.26E+03      0.00
0.00      0.00


* EQUIVALENT CONCENTRATED LOAD AT ORIGIN *

      VER.LOAD X,KIP     HOR.LOAD Y,KIP     HOR.LOAD Z,KIP
             2701.98           30.9100           0.00000

      MOMENT X,KIP-IN    MOMENT Y,KIP-IN    MOMENT Z,KIP-IN
             0.00000           0.00000           8261.37


* THE LOADING IS STATIC *
```

```
* CONTROL PARAMETERS *
    TOLERANCE ON CONVERGENCE OF PILE CAP MOVEMENT        =  0.10000
    TOLERANCE ON DETERMINATION OF PILE DEFLECTIONS       =  0.10000     IN
    MAX NO OF ITERATIONS ALLOWED FOR FOUNDATION ANALYSIS =      100
    MAXIMUM NO OF ITERATIONS ALLOWED FOR PILE ANALYSIS   =      100
    FACTOR TO APPLY THE LOAD IN INCREMENTS               =   1.0000
    MINIMUM FACTOR FOR LOAD INCREMENTS                   =   1.0000
    PRINT RESULTS ONLY AT PILE CAP


LOAD CASE    :    11
CASE NAME    : STR V-L1

LOAD TYPE    : Dead, DL
SCALE FACTOR :       1.0000

* CONCENTRATED LOADS *

   NL  VERT.LOAD HR.LOAD Y HR.LOAD Z  MOMENT X  MOMENT Y  MOMENT Z   COORD X
COORD Y   COORD Z
          KIP       KIP       KIP      KIP-IN    KIP-IN    KIP-IN      FT        FT
     FT
    1   2.58E+03      44.6     -33.0      0.00  5.00E+04  1.03E+04      0.00
0.00      0.00


* EQUIVALENT CONCENTRATED LOAD AT ORIGIN *

       VER.LOAD X,KIP     HOR.LOAD Y,KIP     HOR.LOAD Z,KIP
              2577.77           44.6400          -32.9700

       MOMENT X,KIP-IN    MOMENT Y,KIP-IN    MOMENT Z,KIP-IN
              0.00000           50000.7           10259.6


* THE LOADING IS STATIC *


* CONTROL PARAMETERS *
    TOLERANCE ON CONVERGENCE OF PILE CAP MOVEMENT        =  0.10000
    TOLERANCE ON DETERMINATION OF PILE DEFLECTIONS       =  0.10000     IN
    MAX NO OF ITERATIONS ALLOWED FOR FOUNDATION ANALYSIS =      100
    MAXIMUM NO OF ITERATIONS ALLOWED FOR PILE ANALYSIS   =      100
    FACTOR TO APPLY THE LOAD IN INCREMENTS               =   1.0000
    MINIMUM FACTOR FOR LOAD INCREMENTS                   =   1.0000
    PRINT RESULTS ONLY AT PILE CAP


LOAD CASE    :    12
CASE NAME    : STR V-L2
```

```
     LOAD TYPE    : Dead, DL
     SCALE FACTOR :       1.0000

     * CONCENTRATED LOADS *

    NL  VERT.LOAD HR.LOAD Y HR.LOAD Z  MOMENT X  MOMENT Y  MOMENT Z   COORD X
COORD Y   COORD Z
           KIP       KIP       KIP      KIP-IN    KIP-IN    KIP-IN      FT        FT
       FT
     1   2.77E+03      44.6     -33.0      0.00  4.06E+04  1.03E+04      0.00
0.00      0.00


     * EQUIVALENT CONCENTRATED LOAD AT ORIGIN *

           VER.LOAD X,KIP     HOR.LOAD Y,KIP     HOR.LOAD Z,KIP
                  2774.08           44.6400          -32.9700

           MOMENT X,KIP-IN    MOMENT Y,KIP-IN    MOMENT Z,KIP-IN
                  0.00000           40577.8           10259.6


     * THE LOADING IS STATIC *


     * CONTROL PARAMETERS *
         TOLERANCE ON CONVERGENCE OF PILE CAP MOVEMENT        =  0.10000
         TOLERANCE ON DETERMINATION OF PILE DEFLECTIONS       =  0.10000     IN
         MAX NO OF ITERATIONS ALLOWED FOR FOUNDATION ANALYSIS =      100
         MAXIMUM NO OF ITERATIONS ALLOWED FOR PILE ANALYSIS   =      100
         FACTOR TO APPLY THE LOAD IN INCREMENTS               =   1.0000
         MINIMUM FACTOR FOR LOAD INCREMENTS                   =   1.0000
         PRINT RESULTS ONLY AT PILE CAP



     * TABLE D *   ARRANGEMENT OF PILE GROUPS

     GROUP  CONN.Z-Z   CONN.Y-Y   PILE PROP  P-Y CURVE  L-S CURVE  T-R CURVE  R-F-L
SET
       1       PIN        PIN         1          0          1 G        1 G        0
       2       PIN        PIN         1          0          1 G        1 G        0
       3       PIN        PIN         1          0          1 G        1 G        0
       4       PIN        PIN         1          0          1 G        1 G        0
       5       PIN        PIN         1          0          1 G        1 G        0
       6       PIN        PIN         1          0          2 G        2 G        0
       7       PIN        PIN         1          0          2 G        2 G        0
       8       PIN        PIN         1          0          2 G        2 G        0
       9       PIN        PIN         1          0          2 G        2 G        0
```

10	PIN	PIN	1	0	2 G	2 G	0
11	PIN	PIN	1	0	3 G	3 G	0
12	PIN	PIN	1	0	3 G	3 G	0
13	PIN	PIN	1	0	3 G	3 G	0
14	PIN	PIN	1	0	3 G	3 G	0
15	PIN	PIN	1	0	3 G	3 G	0

GROUP	CorX,FT	CorY,FT	CorZ,FT	ALPHA,DEG	BETA,DEG	THETA,DEG	GROUND,FT	SPz,KIP-IN	SPy,KIP-IN
1	0.000	-5.000	-15.00	0.000	99.46	0.000	-5.000	0.000	0.000
2	0.000	-5.000	-7.500	0.000	99.46	0.000	-5.000	0.000	0.000
3	0.000	-5.000	0.000	0.000	99.46	0.000	-5.000	0.000	0.000
4	0.000	-5.000	7.500	0.000	99.46	0.000	-5.000	0.000	0.000
5	0.000	-5.000	15.00	0.000	99.46	0.000	-5.000	0.000	0.000
6	0.000	0.000	-15.00	90.00	90.00	0.000	-5.000	0.000	0.000
7	0.000	0.000	-7.500	90.00	90.00	0.000	-5.000	0.000	0.000
8	0.000	0.000	0.000	90.00	90.00	0.000	-5.000	0.000	0.000
9	0.000	0.000	7.500	90.00	90.00	0.000	-5.000	0.000	0.000
10	0.000	0.000	15.00	90.00	90.00	0.000	-5.000	0.000	0.000
11	0.000	5.000	-15.00	0.000	80.54	0.000	-5.000	0.000	0.000
12	0.000	5.000	-7.500	0.000	80.54	0.000	-5.000	0.000	0.000
13	0.000	5.000	0.000	0.000	80.54	0.000	-5.000	0.000	0.000
14	0.000	5.000	7.500	0.000	80.54	0.000	-5.000	0.000	0.000
15	0.000	5.000	15.00	0.000	80.54	0.000	-5.000	0.000	0.000

```
* TABLE E *   PILE GEOMETRY AND PROPERTIES
              PILE TYPE = 1 - DRIVEN PILE
                        = 2 - DRILLED SHAFT
```

PROP	SECTS	INC	PILE TYPE	LENGTH, FT
1	1	100	1	76.000

```
* PILE SECTIONS *
```

```
  PROP    SECT      FROM,FT         TO,FT    CROSS SECT
    1       1        0.00000        76.0000       1

* PILE CROSS SECTIONS *

 CROSS SECTION       :     1
 SECTION NAME        : HP14X117
 TYPE                :  ELASTIC
 CROSS SECTION TYPE  : H SECTION
 EQUIVALENT DIAMETER :       13.4000 IN
 EXTERNAL WIDTH      :       14.7800 IN
 EXTERNAL DEPTH      :       14.0800 IN
 FLANGE THICKNESS    :       0.68000 IN
 WEB THICKNESS       :       0.68000 IN
 YOUNG MODULUS       :       29000.0 KIP/IN**2
 SHEAR MODULUS       :       11165.0 KIP/IN**2

* PILE CROSS SECTIONS PROPERTIES *

         ELASTIC SECTIONS

    SECT         DIAM,IN     PERIM,IN   AREA,IN**2   Iz,IN**4    Iy,IN**4
GJ,KIP-IN**2   Mn,KIP-IN    Vn,KIP
      1           13.400       57.7200      28.274      1089.4      316.70
1.5700E+07      0.0000      0.0000



* TABLE F *   SOIL DATA


SOILS INFORMATION

    GROUND SURFACE          =     -5.00000  FT

    5 LAYER(S) OF SOIL

    LAYER  1
    THE SOIL IS A SAND
                                                        TOP OF LAYER    BOTTOM OF
LAYER
    X COORDINATE                          (FT)       -5.00000           0.00000
    EFFECTIVE UNIT WEIGHT         (KIP/FT**3)        0.13000           0.13000
    FRICTION ANGLE                  (DEGREES)        34.0000           34.0000
    P-Y SUBGRADE MODULUS          (KIP/IN**3)        0.22500           0.22500
    ULTIMATE UNIT SIDE FRICTION   (KIP/FT**2)    4.80703E-03 (P)       0.28842
(P)
    ULTIMATE UNIT TIP RESISTANCE  (KIP/FT**2)        0.00000           0.00000
```

```
        LAYER  2
        THE SOIL IS A STIFF CLAY WITHOUT FREE WATER
                                                        TOP OF LAYER    BOTTOM OF
LAYER
        X COORDINATE                          (FT)        0.00000          3.00000
        EFFECTIVE UNIT WEIGHT         (KIP/FT**3)        0.12500          0.12500
        UNDRAINED COHESION, C         (KIP/FT**2)        1.50000          1.50000
        STRAIN AT 50% STRESS                           7.00000E-03      7.00000E-03
        ULTIMATE UNIT SIDE FRICTION   (KIP/FT**2)        0.60851 (P)      0.35795
(P)
        ULTIMATE UNIT TIP RESISTANCE  (KIP/FT**2)        0.00000          0.00000

        LAYER  3
        THE SOIL IS A STIFF CLAY WITHOUT FREE WATER
                                                        TOP OF LAYER    BOTTOM OF
LAYER
        X COORDINATE                          (FT)        3.00000          5.00000
        EFFECTIVE UNIT WEIGHT         (KIP/FT**3)        0.12000          0.12000
        UNDRAINED COHESION, C         (KIP/FT**2)        0.50000          0.50000
        STRAIN AT 50% STRESS                           1.00000E-02      1.00000E-02
        ULTIMATE UNIT SIDE FRICTION   (KIP/FT**2)        0.35795 (P)      0.28118
(P)
        ULTIMATE UNIT TIP RESISTANCE  (KIP/FT**2)        0.00000          0.00000

        LAYER  4
        THE SOIL IS A SOFT CLAY
                                                        TOP OF LAYER    BOTTOM OF
LAYER
        X COORDINATE                          (FT)        5.00000          74.0000
        EFFECTIVE UNIT WEIGHT         (KIP/FT**3)      0.0376000        0.0376000
        UNDRAINED COHESION, C         (KIP/FT**2)        0.25000          0.25000
        STRAIN AT 50% STRESS                            0.0200000        0.0200000
        ULTIMATE UNIT SIDE FRICTION   (KIP/FT**2)        0.28118 (P)      222.045
(P)
        ULTIMATE UNIT TIP RESISTANCE  (KIP/FT**2)        0.00000          0.00000

        LAYER  5
        THE LAYER IS A WEAK ROCK
                                                        TOP OF LAYER    BOTTOM OF
LAYER
        X COORDINATE                          (FT)        74.0000          84.0000
        EFFECTIVE UNIT WEIGHT         (KIP/FT**3)      0.0876000        0.0876000
        UNIAXIAL COMPRESSIVE STRENGTH (KIP/IN**2)        15.0000          15.0000
        YOUNG MODULUS,ER              (KIP/IN**2)        0.00000          0.00000
        KRM                                            1.00000E-03      1.00000E-03
        RQD                                   (%)        85.0000          85.0000
        ULTIMATE UNIT SIDE FRICTION   (KIP/FT**2)        216.000 (P)      216.000
(P)
        ULTIMATE UNIT TIP RESISTANCE  (KIP/FT**2)        19440.0 (R)      19440.0
(R)
```

```
  Notes :  Program estimated values for listed parameters
           if zero input values were entered:
           (P) ULTIMATE UNIT SIDE FRICTION for Driven Piles
           (R) ULTIMATE UNIT TIP RESISTANCE for Driven Piles


* TABLE H *   AXIAL LOAD VS DISPLACEMENT

AXIAL LOAD-DISPLACEMENT CURVES GENERATED INTERNALLY

  NUM OF CURVES  3

   CURVE  1          NUM OF POINTS 19

  DISPLACEMENT, IN       AXIAL LOAD,KIP
         -3.29308             -1237.06
         -2.29308             -1237.06
         -1.79308             -1237.05
         -1.46143             -1299.01
         -1.31833             -1214.81
         -0.33391             -358.602
         -0.18592             -227.746
       -0.0406755             -67.0764
     -3.98367E-03             -6.37095
          0.00000              0.00000
        0.0227285              37.2101
          0.21938              261.118
          0.88467              858.399
          1.71915              1606.57
          4.30231              3898.14
          5.52483              4951.97
          6.03858              5054.09
          6.53858              5054.09
          7.53858              5054.09

   CURVE  2          NUM OF POINTS 19

  DISPLACEMENT, IN       AXIAL LOAD,KIP
         -4.09197             -1969.22
         -3.09197             -1969.22
         -2.59197             -1969.22
         -2.29503             -2062.99
         -2.15800             -1984.43
         -0.55388             -559.645
         -0.29964             -332.134
       -0.0741338             -114.758
     -6.79792E-03             -10.8136
          0.00000              0.00000
```

0.0298254	48.6842
0.28475	320.777
1.20456	1151.45
2.34730	2182.64
5.12858	4655.34
6.32372	5684.13
6.83747	5786.25
7.33747	5786.25
8.33747	5786.25

CURVE 3 NUM OF POINTS 19

DISPLACEMENT, IN	AXIAL LOAD,KIP
-3.29308	-1237.27
-2.29308	-1237.26
-1.79308	-1237.25
-1.46143	-1299.20
-1.31833	-1215.00
-0.33391	-358.757
-0.18592	-227.879
-0.0406757	-67.1227
-3.98368E-03	-6.37360
0.00000	0.00000
0.0227286	37.2329
0.21938	261.256
0.88467	858.585
1.71915	1606.77
4.30231	3898.35
5.52483	4952.18
6.03858	5054.30
6.53858	5054.30
7.53858	5054.30

* TABLE I * TORS. MOM. VS ANGLE ROT.

TORQUE-ROTATION CURVES GENERATED INTERNALLY

NUM OF CURVES 3

CURVE 1 NUM OF POINTS 19

ROT. ANGLE,Rad.	TORS.MOMEN,KIP-IN
-0.74707	-8205.30
-0.59781	-8205.30
-0.52319	-8205.30
-0.48541	-8585.68
-0.45509	-8190.63
-0.12113	-2497.61

-0.0711153	-1641.06
-0.0213194	-734.192
-2.25596E-03	-97.4633
0.00000	0.00000
2.25596E-03	97.4633
0.0213194	734.192
0.0711153	1641.06
0.12113	2497.61
0.45509	8190.63
0.48541	8585.68
0.52319	8205.30
0.59781	8205.30
0.74707	8205.30

CURVE 2 NUM OF POINTS 19

ROT. ANGLE,Rad.	TORS.MOMEN,KIP-IN
-1.03054	-13190.2
-0.88129	-13190.2
-0.80666	-13190.2
-0.77447	-13668.2
-0.75484	-13461.2
-0.23063	-4428.81
-0.12453	-2586.21
-0.0344848	-1005.46
-4.26845E-03	-191.241
0.00000	0.00000
4.26845E-03	191.241
0.0344848	1005.46
0.12453	2586.21
0.23063	4428.81
0.75484	13461.2
0.77447	13668.2
0.80666	13190.2
0.88129	13190.2
1.03054	13190.2

CURVE 3 NUM OF POINTS 19

ROT. ANGLE,Rad.	TORS.MOMEN,KIP-IN
-0.74707	-8205.30
-0.59781	-8205.30
-0.52319	-8205.30
-0.48541	-8585.68
-0.45509	-8190.63
-0.12113	-2497.61
-0.0711153	-1641.06
-0.0213194	-734.192
-2.25596E-03	-97.4633
0.00000	0.00000

2.25596E-03	97.4633
0.0213194	734.192
0.0711153	1641.06
0.12113	2497.61
0.45509	8190.63
0.48541	8585.68
0.52319	8205.30
0.59781	8205.30
0.74707	8205.30

* TABLE J * MOMENT CURVATURE SETS

* TABLE K * REDUCTION FACTORS

REDUCTION FACTORS FOR CLOSELY-SPACED PILE GROUPS ALONG Y-DIRECTION

GROUP NO	P-FACTOR	Y-FACTOR
1	0.8600	1.0000
2	0.8600	1.0000
3	0.8600	1.0000
4	0.8600	1.0000
5	0.8600	1.0000
6	0.7210	1.0000
7	0.7210	1.0000
8	0.7210	1.0000
9	0.7210	1.0000
10	0.7210	1.0000
11	0.5820	1.0000
12	0.5820	1.0000
13	0.5820	1.0000
14	0.5820	1.0000
15	0.5820	1.0000

REDUCTION FACTORS FOR CLOSELY-SPACED PILE GROUPS ALONG Z-DIRECTION

GROUP NO	P-FACTOR	Y-FACTOR
1	0.8730	1.0000
2	0.8730	1.0000
3	0.8730	1.0000
4	0.9730	1.0000
5	0.9870	1.0000
6	0.8730	1.0000
7	0.8730	1.0000
8	0.8730	1.0000

9	0.9730	1.0000
10	0.9870	1.0000
11	0.8730	1.0000
12	0.8730	1.0000
13	0.8730	1.0000
14	0.9730	1.0000
15	0.9870	1.0000

PILE FOUNDATION ANALYSIS

SUMMARY OF GROUP RESULTS

P-MULTIPLIERS

GROUP ANALYSIS

DEPTH TO FIXITY

PILE HEAD FIXED CASE – INPUT

PILE HEAD FIXED CASE – OUTPUT

PILE HEAD PINNED CASE – INPUT

PILE HEAD PINNED CASE - OUTPUT

```
==========================================================================

                 GROUP for Windows, Version 2019.11.10

                  Serial Number : 235486675

                  Analysis of A Group of Piles
               Subjected to Axial and Lateral Loading

                (c) Copyright ENSOFT, Inc., 1987-2018
                      All Rights Reserved

==========================================================================


--------------------------------------------------------------------------
                     Time and Date of Analysis
--------------------------------------------------------------------------

          Date:  August 29, 2025     Time:  12:45:36



            *****     COMPUTATION RESULTS     *****



New Group




            *****     LOAD CASES RESULTS      *****



LOAD CASE :     1
CASE NAME : SER-L1

LOAD TYPE : Dead, DL

  REDUCTION FACTORS FOR CLOSELY-SPACED PILE GROUPS, COMBINED Y AND Z DIRECTIONS
  ESTIMATED USING MOVEMENT IN THE DIRECTION OF PILE CAP DISPLACEMENTS

       GROUP NO     P-FACTOR     Y-FACTOR

           1           0.8604       1.0000
           2           0.8604       1.0000
```

3	0.8604	1.0000
4	0.8634	1.0000
5	0.8639	1.0000
6	0.7258	1.0000
7	0.7258	1.0000
8	0.7258	1.0000
9	0.7294	1.0000
10	0.7299	1.0000
11	0.5923	1.0000
12	0.5923	1.0000
13	0.5923	1.0000
14	0.5967	1.0000
15	0.5973	1.0000

* TABLE L * COMPUTATION ON PILE CAP

* EQUIVALENT CONCENTRATED LOAD AT ORIGIN *

VERT. LOAD,KIPS	HOR. LOAD Y,KIPS	HOR. LOAD Z,KIPS
2023.07	44.8400	-27.9100
MOMENT X ,KIP-IN	**MOMENT Y,KIP-IN**	**MOMENT Z,KIP-IN**
0.00000	38374.6	10703.2

* DISPLACEMENT OF GROUPED PILE FOUNDATION AT ORIGIN *

VERTICAL ,IN	HORIZONTAL Y,IN	HORIZONTAL Z,IN
0.11077	0.0152931	-4.98888E-03
ANGLE ROT. X,RAD	**ANGLE ROT. Y,RAD**	**ANGLE ROT. Z,RAD**
-8.39553E-06	1.43589E-04	3.01722E-04

* PASSIVE RESISTANCE IN PILE CAP *

HOR. LOAD Y,KIP	HOR. LOAD Z,KIP	POSITION, FT	EQ. DIAM, FT
5.50339	0.94200	-1.55556	35.1141

THE GLOBAL STRUCTURAL COORDINATE SYSTEM
---

* PILE TOP DISPLACEMENTS *

```
      PILE GROUP   DISP. X,IN   DISP. Y,IN   DISP. Z,IN   ROT. X,RAD   ROT. Y,RAD
ROT. Z,RAD
      **********  ***********  ***********  ***********  ***********  ***********
***********
          1            0.1030     0.013782  -4.4851E-03  -8.3955E-06   1.4359E-04
3.0172E-04
          2            0.1159     0.014538  -4.4851E-03  -8.3955E-06   1.4359E-04
3.0172E-04
          3            0.1289     0.015293  -4.4851E-03  -8.3955E-06   1.4359E-04
3.0172E-04
          4            0.1418     0.016049  -4.4851E-03  -8.3955E-06   1.4359E-04
3.0172E-04
          5            0.1547     0.016804  -4.4851E-03  -8.3955E-06   1.4359E-04
3.0172E-04
          6          0.084926     0.013782  -4.9889E-03  -8.3955E-06   1.4359E-04
3.0172E-04
          7          0.097849     0.014538  -4.9889E-03  -8.3955E-06   1.4359E-04
3.0172E-04
          8            0.1108     0.015293  -4.9889E-03  -8.3955E-06   1.4359E-04
3.0172E-04
          9            0.1237     0.016049  -4.9889E-03  -8.3955E-06   1.4359E-04
3.0172E-04
         10            0.1366     0.016804  -4.9889E-03  -8.3955E-06   1.4359E-04
3.0172E-04
         11          0.066823     0.013782  -5.4926E-03  -8.3955E-06   1.4359E-04
3.0172E-04
         12          0.079745     0.014538  -5.4926E-03  -8.3955E-06   1.4359E-04
3.0172E-04
         13          0.092669     0.015293  -5.4926E-03  -8.3955E-06   1.4359E-04
3.0172E-04
         14            0.1056     0.016049  -5.4926E-03  -8.3955E-06   1.4359E-04
3.0172E-04
         15            0.1185     0.016804  -5.4926E-03  -8.3955E-06   1.4359E-04
3.0172E-04

       MINIMUM       0.066823     0.013782  -5.4926E-03  -8.3955E-06   1.4359E-04
3.0172E-04
       Pile N.         11            1           11            1            1
    1
       MAXIMUM         0.1547     0.016804  -4.4851E-03  -8.3955E-06   1.4359E-04
3.0172E-04
       Pile N.          5            5            1            1            1
    1

       * PILE TOP REACTIONS *

      PILE GROUP   FOR. X,KIP   FOR. Y,KIP   FOR. Z,KIP MOM X,KIP-IN MOM Y,KIP-IN
MOM Z,KIP-IN
      **********  ***********  ***********  ***********  ***********  ***********
***********
```

```
          1            124.27      -11.482      -0.8689       0.0000       0.0000
-1.3179E-12
          2            138.52      -13.405      -0.8323  -7.8708E-15  -4.7237E-14
   0.0000
          3            152.77      -15.347      -0.7999       0.0000       0.0000
-1.3179E-12
          4            167.02      -17.283      -0.7727   7.8708E-15   4.7237E-14
   0.0000
          5            181.26      -19.253      -0.7468   7.8708E-15   4.7237E-14
   0.0000
          6            107.49       3.7001      -2.0633       0.0000       0.0000
   0.0000
          7            121.29       3.8209      -2.0242   1.1729E-29  -1.1729E-29
-1.9155E-13
          8            135.08       3.9378      -1.9872   1.1729E-29  -1.1729E-29
-1.9155E-13
          9            148.87       4.0644      -1.9585       0.0000       0.0000
   0.0000
         10            162.67       4.1768      -1.9259       0.0000       0.0000
   0.0000
         11            87.560       16.071      -1.9179       0.0000       0.0000
   0.0000
         12            102.14       17.772      -2.0249       0.0000       0.0000
   0.0000
         13            116.74       19.361      -2.0637       0.0000       0.0000
   0.0000
         14            131.34       20.964      -2.0112       0.0000       0.0000
   0.0000
         15            145.92       22.689      -1.8939       0.0000       0.0000
   0.0000

       MINIMUM         87.560      -19.253      -2.0637  -7.8708E-15  -4.7237E-14
-1.3179E-12
       Pile N.         11            5           13            2            2
    1
       MAXIMUM         181.26       22.689      -0.7468   7.8708E-15   4.7237E-14
   0.0000
       Pile N.          5           15            5            4            4
    2


       THE PILE COORDINATE SYSTEM (LOCAL AXES)
       ---------------------------------------

       * PILE TOP DISPLACEMENTS *

      PILE GROUP   DISP. x,IN   DISP. y,IN   DISP. z,IN   ROT. x,RAD   ROT. y,RAD
ROT. z,RAD
      **********  ***********  ***********  ***********  ***********  ***********
***********
```

```
          1          0.099363     0.030528  -4.4851E-03  -3.1882E-05   1.4026E-04
3.0172E-04
          2            0.1120     0.033398  -4.4851E-03  -3.1882E-05   1.4026E-04
3.0172E-04
          3            0.1246     0.036267  -4.4851E-03  -3.1882E-05   1.4026E-04
3.0172E-04
          4            0.1372     0.039136  -4.4851E-03  -3.1882E-05   1.4026E-04
3.0172E-04
          5            0.1499     0.042006  -4.4851E-03  -3.1882E-05   1.4026E-04
3.0172E-04
          6          0.084926  -4.9889E-03    -0.013782  -8.3955E-06   3.0172E-04
-1.4359E-04
          7          0.097849  -4.9889E-03    -0.014538  -8.3955E-06   3.0172E-04
-1.4359E-04
          8            0.1108  -4.9889E-03    -0.015293  -8.3955E-06   3.0172E-04
-1.4359E-04
          9            0.1237  -4.9889E-03    -0.016049  -8.3955E-06   3.0172E-04
-1.4359E-04
         10            0.1366  -4.9889E-03    -0.016804  -8.3955E-06   3.0172E-04
-1.4359E-04
         11          0.068179   2.6115E-03  -5.4926E-03   1.5319E-05   1.4302E-04
3.0172E-04
         12          0.081050   1.2329E-03  -5.4926E-03   1.5319E-05   1.4302E-04
3.0172E-04
         13          0.093922  -1.4582E-04  -5.4926E-03   1.5319E-05   1.4302E-04
3.0172E-04
         14            0.1068  -1.5245E-03  -5.4926E-03   1.5319E-05   1.4302E-04
3.0172E-04
         15            0.1197  -2.9032E-03  -5.4926E-03   1.5319E-05   1.4302E-04
3.0172E-04

       MINIMUM       0.068179  -4.9889E-03    -0.016804  -3.1882E-05   1.4026E-04
-1.4359E-04
       Pile N.         11            6           10            1            1
    6
       MAXIMUM         0.1499     0.042006  -4.4851E-03   1.5319E-05   3.0172E-04
3.0172E-04
       Pile N.          5            5            1           11            6
    1

       * PILE TOP REACTIONS *

      PILE GROUP   AXIAL,KIP    LAT. y,KIP   LAT. z,KIP MOM x,KIP-IN MOM y,KIP-IN
MOM z,KIP-IN
      **********  ***********  ***********  ***********  ***********  ***********
***********
          1            124.47       9.0994      -0.8689       0.0000       0.0000
-1.3179E-12
          2            138.84       9.5447      -0.8323       0.0000  -4.7888E-14
   0.0000
```

```
          3            153.21       9.9706      -0.7999       0.0000       0.0000
-1.3179E-12
          4            167.59       10.403      -0.7727       0.0000   4.7888E-14
   0.0000
          5            181.96       10.801      -0.7468       0.0000   4.7888E-14
   0.0000
          6            107.49      -2.0633      -3.7001       0.0000       0.0000
   0.0000
          7            121.29      -2.0242      -3.8209       0.0000  -1.9155E-13
   0.0000
          8            135.08      -1.9872      -3.9378       0.0000  -1.9155E-13
   0.0000
          9            148.87      -1.9585      -4.0644       0.0000       0.0000
   0.0000
         10            162.67      -1.9259      -4.1768       0.0000       0.0000
   0.0000
         11            89.010       1.4616      -1.9179       0.0000       0.0000
   0.0000
         12            103.67       0.7420      -2.0249       0.0000       0.0000
   0.0000
         13            118.34    -0.090431      -2.0637       0.0000       0.0000
   0.0000
         14            133.00      -0.9086      -2.0112       0.0000       0.0000
   0.0000
         15            147.66      -1.6028      -1.8939       0.0000       0.0000
   0.0000

       MINIMUM         89.010      -2.0633      -4.1768       0.0000  -1.9155E-13
-1.3179E-12
       Pile N.         11            6           10            1            7
    1
       MAXIMUM         181.96       10.801      -0.7468       0.0000   4.7888E-14
   0.0000
       Pile N.          5            5            5            1            4
    2

      PILE GROUP   STRESS,KIP/IN**2
      **********  ****************
          1            4.4021
          2            4.9105
          3            5.4188
          4            5.9272
          5            6.4355
          6            3.8018
          7            4.2897
          8            4.7775
          9            5.2653
         10            5.7532
         11            3.1481
         12            3.6667
```

```
         13            4.1853
         14            4.7039
         15            5.2225

       MINIMUM         3.1481
       Pile N.         11
       MAXIMUM         6.4355
       Pile N.          5

       * EFFECTS FOR LATERALLY LOADED PILE *

       * MINIMUM VALUES AND LOCATIONS *

     PILE     DISPL.      DISPL.      MOMENT      MOMENT       SHEAR       SHEAR
SOIL REACT  SOIL REACT     TOTAL    FLEX. RIG.  FLEX. RIG.
               y-DIR       z-DIR       z-DIR       y-DIR       y-DIR       z-DIR
  y-DIR       z-DIR      STRESS       z-DIR       y-DIR
                IN          IN        KIP-IN      KIP-IN        KIP         KIP
 KIP/IN      KIP/IN     KIP/IN**2   KIP-IN**2   KIP-IN**2
    ******  **********  **********  **********  **********  **********  **********
**********  **********  **********  **********  **********
        1  -4.0624E-03 -4.4851E-03     -19.563     -15.713     -2.2253     -0.7820
-0.017432   -0.027007      4.4021  3.1594E+07  9.1843E+06
     x(FT)      10.640      0.0000      19.000      3.0400      6.0800      0.0000
   13.680      0.7600      63.840      0.0000      0.0000
        2  -4.3821E-03 -4.4851E-03     -21.147     -15.296     -2.3250     -0.7486
-0.018128   -0.025369      4.9105  3.1594E+07  9.1843E+06
     x(FT)      10.640      0.0000      19.000      3.0400      6.0800      0.0000
   13.680      0.7600      63.840      0.0000      0.0000
        3  -4.6871E-03 -4.4851E-03     -22.677     -14.920     -2.4198     -0.7190
-0.019718   -0.023948      5.4188  3.1594E+07  9.1843E+06
     x(FT)      10.640      0.0000      19.760      3.0400      6.8400      0.0000
   19.760      0.7600      64.600      0.0000      0.0000
        4  -4.9837E-03 -4.4851E-03     -24.388     -14.601     -2.5244     -0.6940
-0.021861   -0.022778      5.9272  3.1594E+07  9.1843E+06
     x(FT)      10.640      0.0000      19.760      3.0400      6.8400      0.0000
   20.520      0.7600      64.600      0.0000      0.0000
        5  -5.2630E-03 -4.4851E-03     -26.029     -14.291     -2.6194     -0.6703
-0.024671   -0.021684      6.4355  3.1594E+07  9.1843E+06
     x(FT)      10.640      0.0000      19.760      3.0400      6.8400      0.0000
   20.520      0.7600      65.360      0.0000      0.0000
        6  -4.9889E-03   -0.013782     -42.873     -60.272     -1.9520     -3.3927
-0.069555     -0.1356      3.8018  3.1594E+07  9.1843E+06
     x(FT)      0.0000      0.0000      3.0400      2.2800      0.0000      0.0000
   2.2800      1.5200      0.0000      0.0000      0.0000
        7  -4.9889E-03   -0.014537     -42.507     -62.725     -1.9151     -3.5030
-0.067981     -0.1391      4.2897  3.1594E+07  9.1843E+06
     x(FT)      0.0000      0.0000      3.8000      2.2800      0.0000      0.0000
   2.2800      2.2800      56.240      0.0000      0.0000
        8  -4.9889E-03   -0.015293     -42.173     -65.130     -1.8802     -3.6097
```

```
-0.066477     -0.1434      4.7775  3.1594E+07  9.1843E+06
     x(FT)      0.0000      0.0000      3.8000      2.2800      0.0000      0.0000
   2.2800      2.2800      56.240      0.0000      0.0000
        9  -4.9889E-03   -0.016049     -41.935     -67.651     -1.8529     -3.7246
-0.065284     -0.1481      5.2653  3.1594E+07  9.1843E+06
     x(FT)      0.0000      0.0000      3.8000      2.2800      0.0000      0.0000
   2.2800      2.2800      0.0000      0.0000      0.0000
       10  -4.9889E-03   -0.016804     -41.634     -70.001     -1.8221     -3.8270
-0.063942     -0.1522      5.7532  3.1594E+07  9.1843E+06
     x(FT)      0.0000      0.0000      3.8000      2.2800      0.0000      0.0000
   2.2800      2.2800      0.0000      0.0000      0.0000
       11  -4.3455E-04 -5.4926E-03     -2.4327     -30.179     -0.3795     -1.7734
-3.7078E-03   -0.076033      3.1481  3.1594E+07  9.1843E+06
     x(FT)      8.3600      0.0000      15.200      2.2800      4.5600      0.0000
   10.640      0.7600      0.0000      0.0000      0.0000
       12  -2.1722E-04 -5.4926E-03     -1.3725     -31.862     -0.2054     -1.8757
-1.9668E-03   -0.080720      3.6667  3.1594E+07  9.1843E+06
     x(FT)      8.3600      0.0000      15.200      2.2800      4.5600      0.0000
   11.400      0.7600      0.0000      0.0000      0.0000
       13  -1.4582E-04 -5.4926E-03     -1.9223     -32.569   -0.086427     -1.9129
-3.7871E-03   -0.082217      4.1853  3.1594E+07  9.1843E+06
     x(FT)      0.0000      0.0000      3.0400      2.2800      0.0000      0.0000
   3.0400      0.7600      0.0000      0.0000      0.0000
       14  -1.5245E-03 -5.4926E-03     -19.039     -31.663     -0.8671     -1.8616
-0.034532   -0.080496      4.7039  3.1594E+07  9.1843E+06
     x(FT)      0.0000      0.0000      3.0400      2.2800      0.0000      0.0000
   3.0400      0.7600      0.0000      0.0000      0.0000
       15  -2.9032E-03 -5.4926E-03     -33.373     -29.933     -1.5264     -1.7494
-0.054992   -0.075377      5.2225  3.1594E+07  9.1843E+06
     x(FT)      0.0000      0.0000      3.0400      2.2800      0.0000      0.0000
   3.0400      0.7600      0.0000      0.0000      0.0000

      Min. -5.2630E-03   -0.016804     -42.873     -70.001     -2.6194     -3.8270
-0.069555     -0.1522      3.1481  3.1594E+07  9.1843E+06
   Pile N.       5          10           6          10           5          10
    6          10          11           1           1

       * MAXIMUM VALUES AND LOCATIONS *

     PILE     DISPL.      DISPL.      MOMENT      MOMENT       SHEAR       SHEAR
SOIL REACT  SOIL REACT     TOTAL    FLEX. RIG.  FLEX. RIG.
               y-DIR       z-DIR       z-DIR       y-DIR       y-DIR       z-DIR
  y-DIR       z-DIR      STRESS       z-DIR       y-DIR
                IN          IN        KIP-IN      KIP-IN        KIP         KIP
 KIP/IN      KIP/IN     KIP/IN**2   KIP-IN**2   KIP-IN**2
    ******  **********  **********  **********  **********  **********  **********
**********  **********  **********  **********  **********
        1     0.030528  6.2636E-04      214.34      1.0322      8.5082      0.2233
   0.2501  2.3666E-03      5.7554  3.1594E+07  9.1843E+06
     x(FT)      0.0000      8.3600      3.8000      15.200      0.0000      5.3200
```

```
   3.0400      7.6000      3.8000      0.0000      0.0000
        2     0.033398  6.3135E-04      228.07      1.0206      8.9213      0.2157
   0.2613  2.2302E-03      6.3449  3.1594E+07  9.1843E+06
     x(FT)      0.0000      8.3600      3.8000      15.200      0.0000      5.3200
   3.0400      7.6000      3.8000      0.0000      0.0000
        3     0.036267  6.3529E-04      241.35      1.0139      9.3162      0.2087
   0.2718  2.1089E-03      6.9321  3.1594E+07  9.1843E+06
     x(FT)      0.0000      8.3600      3.8000      15.960      0.0000      5.3200
   3.0400      7.6000      3.8000      0.0000      0.0000
        4     0.039136  6.3818E-04      254.65      1.0125      9.7166      0.2028
   0.2826  2.0107E-03      7.5199  3.1594E+07  9.1843E+06
     x(FT)      0.0000      8.3600      3.8000      15.960      0.0000      5.3200
   3.0400      8.3600      3.8000      0.0000      0.0000
        5     0.042006  6.4060E-04      267.26      1.0091      10.085      0.1971
   0.2923  1.9259E-03      8.1037  3.1594E+07  9.1843E+06
     x(FT)      0.0000      8.3600      3.8000      15.960      0.0000      5.3200
   3.0400      8.3600      3.8000      0.0000      0.0000
        6   6.1496E-04  1.9218E-03      3.4868      4.2075      0.4922      0.9305
5.0955E-03    0.012686      5.1005  3.1594E+07  9.1843E+06
     x(FT)      9.1200      7.6000      16.720      13.680      6.0800      4.5600
   12.920      4.5600      2.2800      0.0000      0.0000
        7   6.1161E-04  2.0453E-03      3.4775      4.4702      0.4846      0.9654
5.0428E-03    0.012384      5.6387  3.1594E+07  9.1843E+06
     x(FT)      9.1200      7.6000      16.720      13.680      6.0800      4.5600
   12.920      4.5600      2.2800      0.0000      0.0000
        8   6.0813E-04  2.1695E-03      3.4666      4.7322      0.4775      0.9995
5.0266E-03    0.012056      6.1761  3.1594E+07  9.1843E+06
     x(FT)      9.1200      7.6000      16.720      13.680      6.0800      4.5600
   13.680      4.5600      2.2800      0.0000      0.0000
        9   6.0668E-04  2.2930E-03      3.4628      4.9969      0.4722      1.0364
5.0226E-03    0.011925      6.7161  3.1594E+07  9.1843E+06
     x(FT)      9.8800      7.6000      16.720      13.680      6.0800      4.5600
   13.680      4.5600      2.2800      0.0000      0.0000
       10   6.0475E-04  2.4181E-03      3.4509      5.2582      0.4659      1.0700
5.0035E-03    0.011596      7.2525  3.1594E+07  9.1843E+06
     x(FT)      9.8800      7.6000      16.720      13.680      6.0800      4.5600
   13.680      4.5600      2.2800      0.0000      0.0000
       11   2.6116E-03  8.2248E-04      30.418      1.8600      1.3929      0.6095
 0.050973    0.018349      3.8098  3.1594E+07  9.1843E+06
     x(FT)      0.0000      6.8400      3.0400      12.920      0.0000      3.8000
   3.0400      4.5600      2.2800      0.0000      0.0000
       12   1.2329E-03  8.3673E-04      15.602      2.0416      0.7085      0.6801
 0.028918    0.021095      4.3466  3.1594E+07  9.1843E+06
     x(FT)      0.0000      6.8400      3.0400      12.160      0.0000      3.8000
   3.0400      4.5600      2.2800      0.0000      0.0000
       13   2.6493E-05  8.4164E-04      0.1969      2.1368    0.025819      0.7160
3.3199E-04    0.022110      4.8744  3.1594E+07  9.1843E+06
     x(FT)      7.6000      6.8400      15.200      12.160      4.5600      3.8000
   15.200      4.5600      2.2800      0.0000      0.0000
       14   2.6631E-04  8.3546E-04      1.6382      2.0130      0.2490      0.6712
```

```
2.3968E-03    0.020846      5.3825  3.1594E+07  9.1843E+06
     x(FT)      8.3600      6.8400      15.200      12.160      4.5600      3.8000
   11.400      4.5600      2.2800      0.0000      0.0000
       15   4.8016E-04  8.2309E-04      2.6450      1.8448      0.4145      0.6022
4.0444E-03    0.018019      5.8838  3.1594E+07  9.1843E+06
     x(FT)      8.3600      6.8400      15.960      12.920      5.3200      3.8000
   10.640      4.5600      2.2800      0.0000      0.0000

      Max.    0.042006  2.4181E-03      267.26      5.2582      10.085      1.0700
   0.2923    0.022110      8.1037  3.1594E+07  9.1843E+06
   Pile N.       5          10           5          10           5          10
    5          13           5           1           1


     LOAD CASE :     2
     CASE NAME : SER-L2

     LOAD TYPE : Dead, DL

       REDUCTION FACTORS FOR CLOSELY-SPACED PILE GROUPS, COMBINED Y AND Z DIRECTIONS
       ESTIMATED USING MOVEMENT IN THE DIRECTION OF PILE CAP DISPLACEMENTS

            GROUP NO     P-FACTOR     Y-FACTOR

                1          0.8604       1.0000
                2          0.8604       1.0000
                3          0.8604       1.0000
                4          0.8633       1.0000
                5          0.8637       1.0000
                6          0.7255       1.0000
                7          0.7255       1.0000
                8          0.7255       1.0000
                9          0.7290       1.0000
               10          0.7295       1.0000
               11          0.5918       1.0000
               12          0.5918       1.0000
               13          0.5918       1.0000
               14          0.5960       1.0000
               15          0.5966       1.0000


     * TABLE L *   COMPUTATION ON PILE CAP


     * EQUIVALENT CONCENTRATED LOAD AT ORIGIN *


           VERT. LOAD,KIPS    HOR. LOAD Y,KIPS   HOR. LOAD Z,KIPS
```

```
              2168.48            44.8400           -27.9100

        MOMENT X ,KIP-IN    MOMENT Y,KIP-IN    MOMENT Z,KIP-IN
              0.00000            31394.6            10703.2


     * DISPLACEMENT OF GROUPED PILE FOUNDATION AT ORIGIN *


          VERTICAL ,IN      HORIZONTAL Y,IN     HORIZONTAL Z,IN
              0.11958          0.0162195       -5.06175E-03

        ANGLE ROT. X,RAD    ANGLE ROT. Y,RAD    ANGLE ROT. Z,RAD
          -5.15298E-06        1.17523E-04        3.04699E-04


     * PASSIVE RESISTANCE IN PILE CAP *

           HOR. LOAD Y,KIP    HOR. LOAD Z,KIP      POSITION, FT      EQ. DIAM, FT
              5.81263            0.97046           -1.55556            35.1141


       THE GLOBAL STRUCTURAL COORDINATE SYSTEM
       ---------------------------------------

       * PILE TOP DISPLACEMENTS *

      PILE GROUP   DISP. X,IN   DISP. Y,IN   DISP. Z,IN   ROT. X,RAD   ROT. Y,RAD
ROT. Z,RAD
      **********  ***********  ***********  ***********  ***********  ***********
***********
          1            0.1167     0.015292  -4.7526E-03  -5.1530E-06   1.1752E-04
3.0470E-04
          2            0.1273     0.015756  -4.7526E-03  -5.1530E-06   1.1752E-04
3.0470E-04
          3            0.1379     0.016220  -4.7526E-03  -5.1530E-06   1.1752E-04
3.0470E-04
          4            0.1484     0.016683  -4.7526E-03  -5.1530E-06   1.1752E-04
3.0470E-04
          5            0.1590     0.017147  -4.7526E-03  -5.1530E-06   1.1752E-04
3.0470E-04
          6          0.098430     0.015292  -5.0618E-03  -5.1530E-06   1.1752E-04
3.0470E-04
          7            0.1090     0.015756  -5.0618E-03  -5.1530E-06   1.1752E-04
3.0470E-04
          8            0.1196     0.016220  -5.0618E-03  -5.1530E-06   1.1752E-04
3.0470E-04
          9            0.1302     0.016683  -5.0618E-03  -5.1530E-06   1.1752E-04
3.0470E-04
         10            0.1407     0.017147  -5.0618E-03  -5.1530E-06   1.1752E-04
```

```
3.0470E-04
         11          0.080147     0.015292  -5.3709E-03  -5.1530E-06   1.1752E-04
3.0470E-04
         12          0.090724     0.015756  -5.3709E-03  -5.1530E-06   1.1752E-04
3.0470E-04
         13            0.1013     0.016220  -5.3709E-03  -5.1530E-06   1.1752E-04
3.0470E-04
         14            0.1119     0.016683  -5.3709E-03  -5.1530E-06   1.1752E-04
3.0470E-04
         15            0.1225     0.017147  -5.3709E-03  -5.1530E-06   1.1752E-04
3.0470E-04

       MINIMUM       0.080147     0.015292  -5.3709E-03  -5.1530E-06   1.1752E-04
3.0470E-04
       Pile N.         11            1           11            1            1
    1
       MAXIMUM         0.1590     0.017147  -4.7526E-03  -5.1530E-06   1.1752E-04
3.0470E-04
       Pile N.          5            5            1            1            1
    1

       * PILE TOP REACTIONS *

      PILE GROUP   FOR. X,KIP   FOR. Y,KIP   FOR. Z,KIP MOM X,KIP-IN MOM Y,KIP-IN
MOM Z,KIP-IN
      **********  ***********  ***********  ***********  ***********  ***********
***********
          1            139.24      -13.395      -0.8711   7.8708E-15   4.7237E-14
   0.0000
          2            150.93      -15.014      -0.8454   7.8708E-15   4.7237E-14
-1.3179E-12
          3            162.61      -16.644      -0.8217       0.0000       0.0000
   0.0000
          4            174.30      -18.259      -0.8017  -7.8708E-15  -4.7237E-14
   0.0000
          5            185.98      -19.902      -0.7816       0.0000       0.0000
   0.0000
          6            121.91       3.9363      -2.0133   1.1729E-29  -1.1729E-29
-1.9155E-13
          7            133.20       4.0055      -1.9912       0.0000       0.0000
   0.0000
          8            144.49       4.0735      -1.9697       0.0000       0.0000
   0.0000
          9            155.78       4.1531      -1.9550   1.1729E-29  -1.1729E-29
-1.9155E-13
         10            167.06       4.2207      -1.9357       0.0000       0.0000
   0.0000
         11            102.66       18.242      -1.9475       0.0000       0.0000
   0.0000
         12            114.59       19.490      -2.0261   7.8708E-15  -4.7237E-14
```

```
   0.0000
         13            126.53       20.675      -2.0238  -7.8708E-15   4.7237E-14
   0.0000
         14            138.46       21.921      -1.9500       0.0000       0.0000
   0.0000
         15            150.37       23.283      -1.8334       0.0000       0.0000
   0.0000

       MINIMUM         102.66      -19.902      -2.0261  -7.8708E-15  -4.7237E-14
-1.3179E-12
       Pile N.         11            5           12            4            4
    2
       MAXIMUM         185.98       23.283      -0.7816   7.8708E-15   4.7237E-14
   0.0000
       Pile N.          5           15            5            1            1
    1


       THE PILE COORDINATE SYSTEM (LOCAL AXES)
       ---------------------------------------

       * PILE TOP DISPLACEMENTS *

      PILE GROUP   DISP. x,IN   DISP. y,IN   DISP. z,IN   ROT. x,RAD   ROT. y,RAD
ROT. z,RAD
      **********  ***********  ***********  ***********  ***********  ***********
***********
          1            0.1126     0.034267  -4.7526E-03  -2.4399E-05   1.1508E-04
3.0470E-04
          2            0.1230     0.036463  -4.7526E-03  -2.4399E-05   1.1508E-04
3.0470E-04
          3            0.1333     0.038658  -4.7526E-03  -2.4399E-05   1.1508E-04
3.0470E-04
          4            0.1437     0.040854  -4.7526E-03  -2.4399E-05   1.1508E-04
3.0470E-04
          5            0.1540     0.043050  -4.7526E-03  -2.4399E-05   1.1508E-04
3.0470E-04
          6          0.098430  -5.0618E-03    -0.015292  -5.1530E-06   3.0470E-04
-1.1752E-04
          7            0.1090  -5.0618E-03    -0.015756  -5.1530E-06   3.0470E-04
-1.1752E-04
          8            0.1196  -5.0618E-03    -0.016220  -5.1530E-06   3.0470E-04
-1.1752E-04
          9            0.1302  -5.0618E-03    -0.016683  -5.1530E-06   3.0470E-04
-1.1752E-04
         10            0.1407  -5.0618E-03    -0.017147  -5.1530E-06   3.0470E-04
-1.1752E-04
         11          0.081571   1.9111E-03  -5.3709E-03   1.4233E-05   1.1677E-04
3.0470E-04
         12          0.092080   6.3008E-04  -5.3709E-03   1.4233E-05   1.1677E-04
```

```
3.0470E-04
         13            0.1026  -6.5089E-04  -5.3709E-03   1.4233E-05   1.1677E-04
3.0470E-04
         14            0.1131  -1.9319E-03  -5.3709E-03   1.4233E-05   1.1677E-04
3.0470E-04
         15            0.1236  -3.2128E-03  -5.3709E-03   1.4233E-05   1.1677E-04
3.0470E-04

       MINIMUM       0.081571  -5.0618E-03    -0.017147  -2.4399E-05   1.1508E-04
-1.1752E-04
       Pile N.         11            6           10            1            1
    6
       MAXIMUM         0.1540     0.043050  -4.7526E-03   1.4233E-05   3.0470E-04
3.0470E-04
       Pile N.          5            5            1           11            6
    1

       * PILE TOP REACTIONS *

      PILE GROUP   AXIAL,KIP    LAT. y,KIP   LAT. z,KIP MOM x,KIP-IN MOM y,KIP-IN
MOM z,KIP-IN
      **********  ***********  ***********  ***********  ***********  ***********
***********
          1            139.55       9.6731      -0.8711       0.0000   4.7888E-14
   0.0000
          2            151.35       9.9964      -0.8454       0.0000   4.7888E-14
-1.3179E-12
          3            163.14       10.310      -0.8217       0.0000       0.0000
   0.0000
          4            174.93       10.637      -0.8017       0.0000  -4.7888E-14
   0.0000
          5            186.72       10.937      -0.7816       0.0000       0.0000
   0.0000
          6            121.91      -2.0133      -3.9363       0.0000  -1.9155E-13
   0.0000
          7            133.20      -1.9912      -4.0055       0.0000       0.0000
   0.0000
          8            144.49      -1.9697      -4.0735       0.0000       0.0000
   0.0000
          9            155.78      -1.9550      -4.1531       0.0000  -1.9155E-13
   0.0000
         10            167.06      -1.9357      -4.2207       0.0000       0.0000
   0.0000
         11            104.27       1.1201      -1.9475       0.0000       0.0000
   0.0000
         12            116.24       0.3907      -2.0261       0.0000  -4.7888E-14
   0.0000
         13            128.21      -0.4033      -2.0238       0.0000   4.7888E-14
   0.0000
         14            140.18      -1.1348      -1.9500       0.0000       0.0000
```

```
   0.0000
         15            152.16      -1.7493      -1.8334       0.0000       0.0000
   0.0000

       MINIMUM         104.27      -2.0133      -4.2207       0.0000  -1.9155E-13
-1.3179E-12
       Pile N.         11            6           10            1            6
    2
       MAXIMUM         186.72       10.937      -0.7816       0.0000   4.7888E-14
   0.0000
       Pile N.          5            5            5            1            1
    1

      PILE GROUP   STRESS,KIP/IN**2
      **********  ****************
          1            4.9356
          2            5.3527
          3            5.7698
          4            6.1869
          5            6.6040
          6            4.3116
          7            4.7109
          8            5.1101
          9            5.5094
         10            5.9087
         11            3.6877
         12            4.1111
         13            4.5345
         14            4.9580
         15            5.3814

       MINIMUM         3.6877
       Pile N.         11
       MAXIMUM         6.6040
       Pile N.          5

       * EFFECTS FOR LATERALLY LOADED PILE *

       * MINIMUM VALUES AND LOCATIONS *

     PILE     DISPL.      DISPL.      MOMENT      MOMENT       SHEAR       SHEAR
SOIL REACT  SOIL REACT     TOTAL    FLEX. RIG.  FLEX. RIG.
               y-DIR       z-DIR       z-DIR       y-DIR       y-DIR       z-DIR
  y-DIR       z-DIR      STRESS       z-DIR       y-DIR
                IN          IN        KIP-IN      KIP-IN        KIP         KIP
 KIP/IN      KIP/IN     KIP/IN**2   KIP-IN**2   KIP-IN**2
    ******  **********  **********  **********  **********  **********  **********
**********  **********  **********  **********  **********
        1  -4.4673E-03 -4.7526E-03     -21.567     -16.079     -2.3499     -0.7834
-0.018302   -0.026387      4.9356  3.1594E+07  9.1843E+06
```

```
     x(FT)      10.640      0.0000      19.000      3.0400      6.0800      0.0000
   13.680      0.7600      63.840      0.0000      0.0000
        2  -4.6989E-03 -4.7526E-03     -22.754     -15.781     -2.4233     -0.7599
-0.019836   -0.025266      5.3527  3.1594E+07  9.1843E+06
     x(FT)      10.640      0.0000      19.760      3.0400      6.8400      0.0000
   19.760      0.7600      64.600      0.0000      0.0000
        3  -4.9225E-03 -4.7526E-03     -24.059     -15.503     -2.4989     -0.7382
-0.021472   -0.024252      5.7698  3.1594E+07  9.1843E+06
     x(FT)      10.640      0.0000      19.760      3.0400      6.8400      0.0000
   19.760      0.7600      0.0000      0.0000      0.0000
        4  -5.1441E-03 -4.7526E-03     -25.338     -15.266     -2.5780     -0.7198
-0.023425   -0.023404      6.1869  3.1594E+07  9.1843E+06
     x(FT)      10.640      0.0000      19.760      3.0400      6.8400      0.0000
   20.520      0.7600      65.360      0.0000      0.0000
        5  -5.3546E-03 -4.7526E-03     -26.572     -15.026     -2.6497     -0.7015
-0.025546   -0.022579      6.6040  3.1594E+07  9.1843E+06
     x(FT)      11.400      0.0000      19.760      3.0400      6.8400      0.0000
   20.520      1.5200      0.0000      0.0000      0.0000
        6  -5.0617E-03   -0.015292     -42.686     -65.009     -1.9048     -3.6084
-0.067305     -0.1432      4.3116  3.1594E+07  9.1843E+06
     x(FT)      0.0000      0.0000      3.8000      2.2800      0.0000      0.0000
   2.2800      2.2800      57.760      0.0000      0.0000
        7  -5.0617E-03   -0.015756     -42.487     -66.469     -1.8839     -3.6716
-0.066414     -0.1458      4.7109  3.1594E+07  9.1843E+06
     x(FT)      0.0000      0.0000      3.8000      2.2800      0.0000      0.0000
   2.2800      2.2800      0.0000      0.0000      0.0000
        8  -5.0617E-03   -0.016220     -42.291     -67.914     -1.8636     -3.7334
-0.065548     -0.1483      5.1101  3.1594E+07  9.1843E+06
     x(FT)      0.0000      0.0000      3.8000      2.2800      0.0000      0.0000
   2.2800      2.2800      0.0000      0.0000      0.0000
        9  -5.0617E-03   -0.016683     -42.182     -69.500     -1.8495     -3.8055
-0.064938     -0.1512      5.5094  3.1594E+07  9.1843E+06
     x(FT)      0.0000      0.0000      3.8000      2.2800      0.0000      0.0000
   2.2800      2.2800      57.760      0.0000      0.0000
       10  -5.0617E-03   -0.017147     -42.005     -70.942     -1.8312     -3.8669
-0.064150     -0.1537      5.9087  3.1594E+07  9.1843E+06
     x(FT)      0.0000      0.0000      3.8000      2.2800      0.0000      0.0000
   2.2800      2.2800      0.0000      0.0000      0.0000
       11  -3.2771E-04 -5.3709E-03     -1.9440     -30.549     -0.3008     -1.8025
-2.9104E-03   -0.077978      3.6877  3.1594E+07  9.1843E+06
     x(FT)      8.3600      0.0000      15.200      2.2800      4.5600      0.0000
   10.640      0.7600      0.0000      0.0000      0.0000
       12  -1.1388E-04 -5.3709E-03     -0.7761     -31.849     -0.1107     -1.8778
-1.0374E-03   -0.081207      4.1111  3.1594E+07  9.1843E+06
     x(FT)      7.6000      0.0000      14.440      2.2800      4.5600      0.0000
   11.400      0.7600      51.680      0.0000      0.0000
       13  -6.5089E-04 -5.3709E-03     -8.5157     -31.844     -0.3853     -1.8755
-0.016475   -0.081176      4.5345  3.1594E+07  9.1843E+06
     x(FT)      0.0000      0.0000      3.0400      2.2800      0.0000      0.0000
   3.0400      0.7600      51.680      0.0000      0.0000
```

```
       14  -1.9319E-03 -5.3709E-03     -23.625     -30.634     -1.0823     -1.8040
-0.041424   -0.078415      4.9580  3.1594E+07  9.1843E+06
     x(FT)      0.0000      0.0000      3.0400      2.2800      0.0000      0.0000
   3.0400      0.7600      0.0000      0.0000      0.0000
       15  -3.2128E-03 -5.3709E-03     -36.343     -28.966     -1.6651     -1.6927
-0.058727   -0.073083      5.3814  3.1594E+07  9.1843E+06
     x(FT)      0.0000      0.0000      3.0400      2.2800      0.0000      0.0000
   3.0400      0.7600      0.0000      0.0000      0.0000

      Min. -5.3546E-03   -0.017147     -42.686     -70.942     -2.6497     -3.8669
-0.067305     -0.1537      3.6877  3.1594E+07  9.1843E+06
   Pile N.       5          10           6          10           5          10
    6          10          11           1           1

       * MAXIMUM VALUES AND LOCATIONS *

     PILE     DISPL.      DISPL.      MOMENT      MOMENT       SHEAR       SHEAR
SOIL REACT  SOIL REACT     TOTAL    FLEX. RIG.  FLEX. RIG.
               y-DIR       z-DIR       z-DIR       y-DIR       y-DIR       z-DIR
  y-DIR       z-DIR      STRESS       z-DIR       y-DIR
               IN          IN        KIP-IN      KIP-IN        KIP         KIP
 KIP/IN      KIP/IN     KIP/IN**2   KIP-IN**2   KIP-IN**2
    ******  **********  **********  **********  **********  **********  **********
**********  **********  **********  **********  **********
        1     0.034267  6.7017E-04      231.98      1.0768      9.0405      0.2260
   0.2646  2.3201E-03      6.3970  3.1594E+07  9.1843E+06
     x(FT)      0.0000      8.3600      3.8000      15.200      0.0000      5.3200
   3.0400      7.6000      3.8000      0.0000      0.0000
        2     0.036462  6.7325E-04      242.10      1.0740      9.3402      0.2205
   0.2727  2.2242E-03      6.8739  3.1594E+07  9.1843E+06
     x(FT)      0.0000      8.3600      3.8000      15.960      0.0000      5.3200
   3.0400      7.6000      3.8000      0.0000      0.0000
        3     0.038658  6.7582E-04      251.98      1.0728      9.6304      0.2153
   0.2804  2.1384E-03      7.3498  3.1594E+07  9.1843E+06
     x(FT)      0.0000      8.3600      3.8000      15.960      0.0000      5.3200
   3.0400      8.3600      3.8000      0.0000      0.0000
        4     0.040854  6.7781E-04      262.05      1.0707      9.9331      0.2110
   0.2885  2.0738E-03      7.8270  3.1594E+07  9.1843E+06
     x(FT)      0.0000      8.3600      3.8000      15.960      0.0000      5.3200
   3.0400      8.3600      3.8000      0.0000      0.0000
        5     0.043050  6.7960E-04      271.61      1.0675      10.210      0.2066
   0.2958  2.0085E-03      8.3012  3.1594E+07  9.1843E+06
     x(FT)      0.0000      8.3600      3.8000      15.960      0.0000      5.3200
   3.0400      8.3600      3.8000      0.0000      0.0000
        6   6.1484E-04  2.1624E-03      3.4987      4.7083      0.4827      0.9958
5.0695E-03    0.011757      5.7082  3.1594E+07  9.1843E+06
     x(FT)      9.8800      7.6000      16.720      13.680      6.0800      4.5600
   13.680      4.5600      2.2800      0.0000      0.0000
        7   6.1381E-04  2.2395E-03      3.4921      4.8701      0.4784      1.0167
5.0593E-03    0.011569      6.1375  3.1594E+07  9.1843E+06
```

```
     x(FT)      9.8800      7.6000      16.720      13.680      6.0800      4.5600
   13.680      4.5600      2.2800      0.0000      0.0000
        8   6.1273E-04  2.3170E-03      3.4849      5.0317      0.4743      1.0373
5.0481E-03    0.011375      6.5666  3.1594E+07  9.1843E+06
     x(FT)      9.8800      7.6000      16.720      13.680      6.0800      4.5600
   13.680      4.5600      2.2800      0.0000      0.0000
        9   6.1233E-04  2.3938E-03      3.4857      5.1973      0.4719      1.0612
5.0508E-03    0.011384      6.9988  3.1594E+07  9.1843E+06
     x(FT)      9.8800      7.6000      16.720      13.680      6.0800      4.5600
   13.680      4.5600      2.2800      0.0000      0.0000
       10   6.1129E-04  2.4716E-03      3.4791      5.3596      0.4682      1.0820
5.0402E-03    0.011499      7.4280  3.1594E+07  9.1843E+06
     x(FT)      9.8800      7.6000      16.720      13.680      6.0800      4.5600
   13.680      8.3600      2.2800      0.0000      0.0000
       11   1.9111E-03  8.0911E-04      23.322      1.9049      1.0685      0.6373
 0.040917    0.019771      4.3475  3.1594E+07  9.1843E+06
     x(FT)      0.0000      6.8400      3.0400      12.160      0.0000      3.8000
   3.0400      4.5600      2.2800      0.0000      0.0000
       12   6.3008E-04  8.1793E-04      8.2479      2.0598      0.3733      0.6973
 0.015965    0.021755      4.7865  3.1594E+07  9.1843E+06
     x(FT)      0.0000      6.8400      3.0400      12.160      0.0000      3.8000
   3.0400      4.5600      2.2800      0.0000      0.0000
       13   1.1768E-04  8.1906E-04      0.7995      2.0613      0.1143      0.6973
1.0718E-03    0.021756      5.2100  3.1594E+07  9.1843E+06
     x(FT)      7.6000      6.8400      14.440      12.160      4.5600      3.8000
   11.400      4.5600      2.2800      0.0000      0.0000
       14   3.3204E-04  8.1049E-04      1.9695      1.9124      0.3055      0.6416
2.9556E-03    0.019965      5.6200  3.1594E+07  9.1843E+06
     x(FT)      8.3600      6.8400      15.200      12.160      4.5600      3.8000
   10.640      4.5600      2.2800      0.0000      0.0000
       15   5.2490E-04  7.9861E-04      2.8573      1.7690      0.4503      0.5779
4.3639E-03    0.017178      6.0284  3.1594E+07  9.1843E+06
     x(FT)      8.3600      6.8400      15.960      12.920      5.3200      3.8000
   10.640      4.5600      2.2800      0.0000      0.0000

      Max.    0.043050  2.4716E-03      271.61      5.3596      10.210      1.0820
   0.2958    0.021756      8.3012  3.1594E+07  9.1843E+06
   Pile N.       5          10           5          10           5          10
    5          13           5           1           1


     LOAD CASE :     3
     CASE NAME : STR I Max-L1

     LOAD TYPE : Dead, DL

       REDUCTION FACTORS FOR CLOSELY-SPACED PILE GROUPS, COMBINED Y AND Z DIRECTIONS
       ESTIMATED USING MOVEMENT IN THE DIRECTION OF PILE CAP DISPLACEMENTS
```

GROUP NO	P-FACTOR	Y-FACTOR
1	0.8600	1.0000
2	0.8600	1.0000
3	0.8600	1.0000
4	0.8600	1.0000
5	0.8600	1.0000
6	0.7210	1.0000
7	0.7210	1.0000
8	0.7210	1.0000
9	0.7210	1.0000
10	0.7210	1.0000
11	0.5820	1.0000
12	0.5820	1.0000
13	0.5820	1.0000
14	0.5820	1.0000
15	0.5820	1.0000

* TABLE L * COMPUTATION ON PILE CAP

* EQUIVALENT CONCENTRATED LOAD AT ORIGIN *

VERT. LOAD,KIPS	HOR. LOAD Y,KIPS	HOR. LOAD Z,KIPS
2665.02	30.9100	0.00000

MOMENT X ,KIP-IN	MOMENT Y,KIP-IN	MOMENT Z,KIP-IN
0.00000	50386.2	8261.37

* DISPLACEMENT OF GROUPED PILE FOUNDATION AT ORIGIN *

VERTICAL ,IN	HORIZONTAL Y,IN	HORIZONTAL Z,IN
0.14966	0.0105169	7.93496E-06

ANGLE ROT. X,RAD	ANGLE ROT. Y,RAD	ANGLE ROT. Z,RAD
-2.49179E-06	1.88923E-04	2.33351E-04

* PASSIVE RESISTANCE IN PILE CAP *

HOR. LOAD Y,KIP	HOR. LOAD Z,KIP	POSITION, FT	EQ. DIAM, FT
7.61394	2.89282E-03	-1.55556	35.1141

THE GLOBAL STRUCTURAL COORDINATE SYSTEM

```
      ---------------------------------------

      * PILE TOP DISPLACEMENTS *

     PILE GROUP   DISP. X,IN   DISP. Y,IN   DISP. Z,IN   ROT. X,RAD   ROT. Y,RAD
ROT. Z,RAD
     **********  ***********  ***********  ***********  ***********  ***********
***********
         1            0.1297     0.010068   1.5744E-04  -2.4918E-06   1.8892E-04
2.3335E-04
         2            0.1467     0.010293   1.5744E-04  -2.4918E-06   1.8892E-04
2.3335E-04
         3            0.1637     0.010517   1.5744E-04  -2.4918E-06   1.8892E-04
2.3335E-04
         4            0.1807     0.010741   1.5744E-04  -2.4918E-06   1.8892E-04
2.3335E-04
         5            0.1977     0.010965   1.5744E-04  -2.4918E-06   1.8892E-04
2.3335E-04
         6            0.1157     0.010068   7.9350E-06  -2.4918E-06   1.8892E-04
2.3335E-04
         7            0.1327     0.010293   7.9350E-06  -2.4918E-06   1.8892E-04
2.3335E-04
         8            0.1497     0.010517   7.9350E-06  -2.4918E-06   1.8892E-04
2.3335E-04
         9            0.1667     0.010741   7.9350E-06  -2.4918E-06   1.8892E-04
2.3335E-04
        10            0.1837     0.010965   7.9350E-06  -2.4918E-06   1.8892E-04
2.3335E-04
        11            0.1017     0.010068  -1.4157E-04  -2.4918E-06   1.8892E-04
2.3335E-04
        12            0.1187     0.010293  -1.4157E-04  -2.4918E-06   1.8892E-04
2.3335E-04
        13            0.1357     0.010517  -1.4157E-04  -2.4918E-06   1.8892E-04
2.3335E-04
        14            0.1527     0.010741  -1.4157E-04  -2.4918E-06   1.8892E-04
2.3335E-04
        15            0.1697     0.010965  -1.4157E-04  -2.4918E-06   1.8892E-04
2.3335E-04

      MINIMUM         0.1017     0.010068  -1.4157E-04  -2.4918E-06   1.8892E-04
2.3335E-04
      Pile N.          11            1           11            1            1
   1
      MAXIMUM         0.1977     0.010965   1.5744E-04  -2.4918E-06   1.8892E-04
2.3335E-04
      Pile N.           5            5            1            1            1
   1

      * PILE TOP REACTIONS *
```

```
      PILE GROUP   FOR. X,KIP   FOR. Y,KIP   FOR. Z,KIP MOM X,KIP-IN MOM Y,KIP-IN
MOM Z,KIP-IN
      **********  ***********  ***********  ***********  ***********  ***********
***********
          1            154.48      -16.378     0.030170       0.0000       0.0000
1.3179E-12
          2            173.35      -19.059     0.028836       0.0000       0.0000
-1.3179E-12
          3            192.22      -21.761     0.027658       0.0000       0.0000
   0.0000
          4            211.08      -24.480     0.026609       0.0000       0.0000
   0.0000
          5            229.94      -27.215     0.025665       0.0000       0.0000
   0.0000
          6            140.30       3.2703   4.1484E-03  -5.8646E-30   3.2175E-16
9.5776E-14
          7            158.44       3.3054   4.1049E-03       0.0000  -3.2175E-16
1.9701E-32
          8            176.59       3.3401   4.0627E-03  -5.8646E-30  -3.2175E-16
9.5776E-14
          9            194.74       3.3742   4.0217E-03       0.0000   3.2175E-16
-1.9701E-32
         10            212.89       3.4078   3.9818E-03       0.0000  -3.2175E-16
1.9701E-32
         11            126.25       17.824    -0.043018   2.4596E-16  -1.4761E-15
   0.0000
         12            145.23       20.386    -0.036882       0.0000       0.0000
3.2947E-13
         13            164.20       23.021    -0.032821   2.4596E-16  -1.4761E-15
   0.0000
         14            183.17       25.707    -0.029872       0.0000       0.0000
   0.0000
         15            202.13       28.431    -0.027601   2.4596E-16  -1.4761E-15
6.5893E-13

       MINIMUM         126.25      -27.215    -0.043018  -5.8646E-30  -1.4761E-15
-1.3179E-12
       Pile N.         11            5           11            6           11
    2
       MAXIMUM         229.94       28.431     0.030170   2.4596E-16   3.2175E-16
1.3179E-12
       Pile N.          5           15            1           11            6
    1


       THE PILE COORDINATE SYSTEM (LOCAL AXES)
       ---------------------------------------

       * PILE TOP DISPLACEMENTS *
```

```
      PILE GROUP   DISP. x,IN   DISP. y,IN   DISP. z,IN   ROT. x,RAD   ROT. y,RAD
ROT. z,RAD
      **********  ***********  ***********  ***********  ***********  ***********
***********
          1            0.1262     0.031242   1.5744E-04  -3.3509E-05   1.8594E-04
2.3335E-04
          2            0.1430     0.034258   1.5744E-04  -3.3509E-05   1.8594E-04
2.3335E-04
          3            0.1597     0.037274   1.5744E-04  -3.3509E-05   1.8594E-04
2.3335E-04
          4            0.1764     0.040289   1.5744E-04  -3.3509E-05   1.8594E-04
2.3335E-04
          5            0.1932     0.043305   1.5744E-04  -3.3509E-05   1.8594E-04
2.3335E-04
          6            0.1157   7.9350E-06    -0.010068  -2.4918E-06   2.3335E-04
-1.8892E-04
          7            0.1327   7.9350E-06    -0.010293  -2.4918E-06   2.3335E-04
-1.8892E-04
          8            0.1497   7.9350E-06    -0.010517  -2.4918E-06   2.3335E-04
-1.8892E-04
          9            0.1667   7.9350E-06    -0.010741  -2.4918E-06   2.3335E-04
-1.8892E-04
         10            0.1837   7.9350E-06    -0.010965  -2.4918E-06   2.3335E-04
-1.8892E-04
         11            0.1019  -6.7767E-03  -1.4157E-04   2.8593E-05   1.8676E-04
2.3335E-04
         12            0.1187  -9.3501E-03  -1.4157E-04   2.8593E-05   1.8676E-04
2.3335E-04
         13            0.1356    -0.011924  -1.4157E-04   2.8593E-05   1.8676E-04
2.3335E-04
         14            0.1524    -0.014497  -1.4157E-04   2.8593E-05   1.8676E-04
2.3335E-04
         15            0.1692    -0.017070  -1.4157E-04   2.8593E-05   1.8676E-04
2.3335E-04

       MINIMUM         0.1019    -0.017070    -0.010965  -3.3509E-05   1.8594E-04
-1.8892E-04
       Pile N.         11           15           10            1            1
    6
       MAXIMUM         0.1932     0.043305   1.5744E-04   2.8593E-05   2.3335E-04
2.3335E-04
       Pile N.          5            5            1           11            6
    1

       * PILE TOP REACTIONS *

      PILE GROUP   AXIAL,KIP    LAT. y,KIP   LAT. z,KIP MOM x,KIP-IN MOM y,KIP-IN
MOM z,KIP-IN
      **********  ***********  ***********  ***********  ***********  ***********
***********
```

```
          1            155.07       9.2349     0.030170       0.0000       0.0000
1.3179E-12
          2            174.13       9.6918     0.028836       0.0000       0.0000
-1.3179E-12
          3            193.18       10.128     0.027658       0.0000       0.0000
   0.0000
          4            212.24       10.547     0.026609       0.0000       0.0000
   0.0000
          5            231.29       10.949     0.025665       0.0000       0.0000
   0.0000
          6            140.30   4.1484E-03      -3.2703       0.0000   9.5776E-14
-3.2175E-16
          7            158.44   4.1049E-03      -3.3054       0.0000       0.0000
3.2175E-16
          8            176.59   4.0627E-03      -3.3401       0.0000   9.5776E-14
3.2175E-16
          9            194.74   4.0217E-03      -3.3742       0.0000       0.0000
-3.2175E-16
         10            212.89   3.9818E-03      -3.4078       0.0000       0.0000
3.2175E-16
         11            127.46      -3.1680    -0.043018       0.0000  -1.4965E-15
   0.0000
         12            146.61      -3.7613    -0.036882       0.0000       0.0000
3.2947E-13
         13            165.76      -4.2809    -0.032821       0.0000  -1.4965E-15
   0.0000
         14            184.90      -4.7487    -0.029872       0.0000       0.0000
   0.0000
         15            204.05      -5.1772    -0.027601       0.0000  -1.4965E-15
6.5893E-13

       MINIMUM         127.46      -5.1772      -3.4078       0.0000  -1.4965E-15
-1.3179E-12
       Pile N.          11           15           10            1           11
    2
       MAXIMUM         231.29       10.949     0.030170       0.0000   9.5776E-14
1.3179E-12
       Pile N.           5            5            1            1            6
    1

      PILE GROUP   STRESS,KIP/IN**2
      **********  ****************
          1            5.4845
          2            6.1584
          3            6.8324
          4            7.5063
          5            8.1802
          6            4.9619
          7            5.6038
          8            6.2456
```

```
          9            6.8875
         10            7.5293
         11            4.5079
         12            5.1851
         13            5.8624
         14            6.5396
         15            7.2169

       MINIMUM         4.5079
       Pile N.         11
       MAXIMUM         8.1802
       Pile N.          5

       * EFFECTS FOR LATERALLY LOADED PILE *

       * MINIMUM VALUES AND LOCATIONS *

     PILE     DISPL.      DISPL.      MOMENT      MOMENT       SHEAR       SHEAR
SOIL REACT  SOIL REACT     TOTAL    FLEX. RIG.  FLEX. RIG.
               y-DIR       z-DIR       z-DIR       y-DIR       y-DIR       z-DIR
  y-DIR       z-DIR      STRESS       z-DIR       y-DIR
                IN          IN        KIP-IN      KIP-IN        KIP         KIP
 KIP/IN      KIP/IN     KIP/IN**2   KIP-IN**2   KIP-IN**2
    ******  **********  **********  **********  **********  **********  **********
**********  **********  **********  **********  **********
        1  -4.2149E-03 -2.2020E-05     -20.319   -0.036166     -2.2865 -7.8440E-03
-0.017793 -8.2379E-05      5.4845  3.1594E+07  9.1843E+06
     x(FT)      10.640      8.3600      19.000      15.200      6.0800      5.3200
   13.680      7.6000      63.840      0.0000      0.0000
        2  -4.5529E-03 -2.2251E-05     -21.987   -0.035802     -2.3895 -7.5631E-03
-0.018511 -7.7562E-05      6.1584  3.1594E+07  9.1843E+06
     x(FT)      10.640      8.3600      19.000      15.200      6.0800      5.3200
   13.680      7.6000      63.840      0.0000      0.0000
        3  -4.8751E-03 -2.2436E-05     -23.686   -0.035754     -2.4864 -7.3114E-03
-0.021058 -7.3293E-05      6.8324  3.1594E+07  9.1843E+06
     x(FT)      10.640      8.3600      19.760      15.960      6.8400      5.3200
   20.520      7.6000      0.0000      0.0000      0.0000
        4  -5.1824E-03 -2.2584E-05     -25.472   -0.035728     -2.5886 -7.0844E-03
-0.023879 -6.9632E-05      7.5063  3.1594E+07  9.1843E+06
     x(FT)      10.640      8.3600      19.760      15.960      6.8400      5.3200
   20.520      8.3600      0.0000      0.0000      0.0000
        5  -5.4756E-03 -2.2705E-05     -27.184   -0.035628     -2.6861 -6.8787E-03
-0.026629 -6.6647E-05      8.1802  3.1594E+07  9.1843E+06
     x(FT)      10.640      8.3600      19.760      15.960      6.8400      5.3200
   20.520      8.3600      0.0000      0.0000      0.0000
        6  -1.2941E-06   -0.010068   -0.010092     -51.793 -1.1458E-03     -3.0091
-1.9755E-05     -0.1268      4.9619  3.1594E+07  9.1843E+06
     x(FT)      8.3600      0.0000      15.200      2.2800      5.3200      0.0000
   15.200      0.7600      47.880      0.0000      0.0000
        7  -1.2874E-06   -0.010293   -0.010072     -52.592 -1.1331E-03     -3.0410
```

```
-2.0082E-05     -0.1276      5.6038  3.1594E+07  9.1843E+06
     x(FT)      8.3600      0.0000      15.200      2.2800      5.3200      0.0000
   15.200      0.7600      0.0000      0.0000      0.0000
        8  -1.2806E-06   -0.010517   -0.010052     -53.385 -1.1208E-03     -3.0723
-2.0415E-05     -0.1284      6.2456  3.1594E+07  9.1843E+06
     x(FT)      8.3600      0.0000      15.200      2.2800      5.3200      0.0000
   15.200      0.7600      47.880      0.0000      0.0000
        9  -1.2738E-06   -0.010741   -0.010032     -54.174 -1.1089E-03     -3.1031
-2.0755E-05     -0.1293      6.8875  3.1594E+07  9.1843E+06
     x(FT)      8.3600      0.0000      15.200      2.2800      5.3200      0.0000
   15.200      0.7600      0.0000      0.0000      0.0000
       10  -1.2668E-06   -0.010965   -0.010013     -54.958 -1.0972E-03     -3.1334
-2.1104E-05     -0.1300      7.5293  3.1594E+07  9.1843E+06
     x(FT)      8.3600      0.0000      15.200      2.2800      5.3200      0.0000
   15.200      0.7600      0.0000      0.0000      0.0000
       11  -6.7766E-03 -1.4157E-04     -65.637     -0.6780     -3.0006   -0.039520
-0.089968 -1.7140E-03      4.5079  3.1594E+07  9.1843E+06
     x(FT)      0.0000      0.0000      3.0400      2.2800      0.0000      0.0000
   2.2800      0.7600      0.0000      0.0000      0.0000
       12  -9.3500E-03 -1.4157E-04     -81.380     -0.6050     -3.5594   -0.033825
  -0.1051 -1.3679E-03      5.1851  3.1594E+07  9.1843E+06
     x(FT)      0.0000      0.0000      3.0400      2.2800      0.0000      0.0000
   3.0400      0.7600      60.800      0.0000      0.0000
       13    -0.011923 -1.4157E-04     -95.583     -0.5617     -4.0483   -0.030060
  -0.1193 -1.1529E-03      5.8624  3.1594E+07  9.1843E+06
     x(FT)      0.0000      0.0000      3.8000      3.0400      0.0000      0.0000
   3.0400      0.7600      0.0000      0.0000      0.0000
       14    -0.014497 -1.4157E-04     -109.70     -0.5309     -4.4882   -0.027328
  -0.1318 -1.0043E-03      6.5396  3.1594E+07  9.1843E+06
     x(FT)      0.0000      0.0000      3.8000      3.0400      0.0000      0.0000
   3.0400      0.7600      0.0000      0.0000      0.0000
       15    -0.017070 -1.4157E-04     -122.91     -0.5059     -4.8907   -0.025224
  -0.1431 -8.9473E-04      7.2169  3.1594E+07  9.1843E+06
     x(FT)      0.0000      0.0000      3.8000      3.0400      0.0000      0.0000
   3.0400      0.7600      63.840      0.0000      0.0000

      Min.   -0.017070   -0.010965     -122.91     -54.958     -4.8907     -3.1334
  -0.1431     -0.1300      4.5079  3.1594E+07  9.1843E+06
   Pile N.      15          10          15          10          15          10
   15          10          11          1           1

      * MAXIMUM VALUES AND LOCATIONS *

     PILE     DISPL.      DISPL.      MOMENT      MOMENT       SHEAR       SHEAR
SOIL REACT  SOIL REACT     TOTAL    FLEX. RIG.  FLEX. RIG.
              y-DIR       z-DIR       z-DIR       y-DIR       y-DIR       z-DIR
  y-DIR       z-DIR      STRESS       z-DIR       y-DIR
               IN          IN        KIP-IN      KIP-IN        KIP         KIP
 KIP/IN      KIP/IN     KIP/IN**2   KIP-IN**2   KIP-IN**2
    ******  **********  **********  **********  **********  **********  **********
```

```
**********  **********  **********  **********  **********
        1     0.031242  1.5744E-04      219.08      0.5489      8.6332    0.027138
   0.2516  9.3812E-04      6.8319  3.1594E+07  9.1843E+06
     x(FT)      0.0000      0.0000      3.8000      3.0400      0.0000      0.0000
   3.0400      0.7600      3.8000      0.0000      0.0000
        2     0.034258  1.5744E-04      233.39      0.5339      9.0570    0.025918
   0.2632  8.7878E-04      7.5938  3.1594E+07  9.1843E+06
     x(FT)      0.0000      0.0000      3.8000      3.0400      0.0000      0.0000
   3.0400      0.7600      3.8000      0.0000      0.0000
        3     0.037274  1.5744E-04      247.24      0.5204      9.4616    0.024842
   0.2741  8.2769E-04      8.3529  3.1594E+07  9.1843E+06
     x(FT)      0.0000      0.0000      3.8000      3.0400      0.0000      0.0000
   3.0400      0.7600      3.8000      0.0000      0.0000
        4     0.040290  1.5744E-04      260.67      0.5082      9.8490    0.023883
   0.2846  7.8317E-04      9.1095  3.1594E+07  9.1843E+06
     x(FT)      0.0000      0.0000      3.8000      3.0400      0.0000      0.0000
   3.0400      0.7600      3.8000      0.0000      0.0000
        5     0.043305  1.5744E-04      273.73      0.4971      10.221    0.023020
   0.2945  7.4398E-04      9.8637  3.1594E+07  9.1843E+06
     x(FT)      0.0000      0.0000      3.8000      3.0400      0.0000      0.0000
   3.0400      0.7600      3.8000      0.0000      0.0000
        6   7.9350E-06  1.4724E-03    0.087545      3.6436  3.9426E-03      0.8994
1.3461E-04    0.025184      6.0576  3.1594E+07  9.1843E+06
     x(FT)      0.0000      6.8400      3.8000      12.920      0.0000      3.8000
   2.2800      4.5600      2.2800      0.0000      0.0000
        7   7.9350E-06  1.5133E-03    0.086962      3.7376  3.9010E-03      0.9082
1.3322E-04    0.025114      6.7164  3.1594E+07  9.1843E+06
     x(FT)      0.0000      6.8400      3.8000      12.920      0.0000      3.8000
   2.2800      4.5600      2.2800      0.0000      0.0000
        8   7.9350E-06  1.5544E-03    0.086391      3.8312  3.8606E-03      0.9169
1.3188E-04    0.025039      7.3750  3.1594E+07  9.1843E+06
     x(FT)      0.0000      6.8400      3.8000      12.920      0.0000      3.8000
   2.2800      4.5600      2.2800      0.0000      0.0000
        9   7.9350E-06  1.5954E-03    0.085831      3.9246  3.8214E-03      0.9256
1.3058E-04    0.024959      8.0336  3.1594E+07  9.1843E+06
     x(FT)      0.0000      6.8400      3.8000      12.920      0.0000      3.8000
   2.2800      4.5600      2.2800      0.0000      0.0000
       10   7.9350E-06  1.6366E-03    0.085282      4.0177  3.7832E-03      0.9342
1.2932E-04    0.024874      8.6920  3.1594E+07  9.1843E+06
     x(FT)      0.0000      6.8400      3.8000      12.920      0.0000      3.8000
   2.2800      4.5600      2.2800      0.0000      0.0000
       11   1.0353E-03  1.7294E-05      5.0203    0.033996      0.8224    0.012872
7.0843E-03  3.1756E-04      4.9118  3.1594E+07  9.1843E+06
     x(FT)      9.1200      7.6000      16.720      13.680      5.3200      3.8000
   9.8800      4.5600      3.0400      0.0000      0.0000
       12   1.4031E-03  1.8555E-05      6.6790    0.033866      0.9624    0.010400
7.9734E-03  1.6856E-04      5.6858  3.1594E+07  9.1843E+06
     x(FT)      9.8800      7.6000      17.480      14.440      5.3200      4.5600
   10.640      5.3200      3.0400      0.0000      0.0000
       13   1.7603E-03  1.9254E-05      8.3035    0.033794      1.0852  9.0808E-03
```

```
8.7379E-03  1.2985E-04      6.4503  3.1594E+07  9.1843E+06
     x(FT)      9.8800      7.6000      18.240      14.440      6.0800      4.5600
   11.400      5.3200      3.8000      0.0000      0.0000
       14   2.0862E-03  1.9762E-05      9.8285    0.033504      1.2002  8.1048E-03
9.4322E-03  1.0237E-04      7.2143  3.1594E+07  9.1843E+06
     x(FT)      9.8800      8.3600      19.000      15.200      6.0800      4.5600
   12.160      5.3200      3.8000      0.0000      0.0000
       15   2.3984E-03  2.0246E-05      11.440    0.033328      1.3018  7.3485E-03
 0.010080  8.1896E-05      7.9728  3.1594E+07  9.1843E+06
     x(FT)      10.640      8.3600      19.000      15.200      6.0800      4.5600
   12.920      5.3200      3.8000      0.0000      0.0000

      Max.    0.043305  1.6366E-03      273.73      4.0177      10.221      0.9342
   0.2945    0.025184      9.8637  3.1594E+07  9.1843E+06
   Pile N.       5          10           5          10           5          10
    5           6           5           1           1


     LOAD CASE :     4
     CASE NAME : STR I Max-L2

     LOAD TYPE : Dead, DL

       REDUCTION FACTORS FOR CLOSELY-SPACED PILE GROUPS, COMBINED Y AND Z DIRECTIONS
       ESTIMATED USING MOVEMENT IN THE DIRECTION OF PILE CAP DISPLACEMENTS

            GROUP NO     P-FACTOR     Y-FACTOR

                1           0.8600       1.0000
                2           0.8600       1.0000
                3           0.8600       1.0000
                4           0.8600       1.0000
                5           0.8600       1.0000
                6           0.7210       1.0000
                7           0.7210       1.0000
                8           0.7210       1.0000
                9           0.7210       1.0000
               10           0.7210       1.0000
               11           0.5820       1.0000
               12           0.5820       1.0000
               13           0.5820       1.0000
               14           0.5820       1.0000
               15           0.5820       1.0000


     * TABLE L *   COMPUTATION ON PILE CAP
```

```
* EQUIVALENT CONCENTRATED LOAD AT ORIGIN *


      VERT. LOAD,KIPS    HOR. LOAD Y,KIPS   HOR. LOAD Z,KIPS
            2919.49            30.9100            0.00000

     MOMENT X ,KIP-IN    MOMENT Y,KIP-IN    MOMENT Z,KIP-IN
            0.00000            38171.4            8261.37


* DISPLACEMENT OF GROUPED PILE FOUNDATION AT ORIGIN *


       VERTICAL ,IN      HORIZONTAL Y,IN     HORIZONTAL Z,IN
            0.16512          0.0105330        3.39191E-06

     ANGLE ROT. X,RAD    ANGLE ROT. Y,RAD    ANGLE ROT. Z,RAD
       -1.46013E-06        1.43150E-04        2.33923E-04


* PASSIVE RESISTANCE IN PILE CAP *

        HOR. LOAD Y,KIP    HOR. LOAD Z,KIP      POSITION, FT      EQ. DIAM, FT
            8.30523        2.76991E-03           -1.55556           35.1141


  THE GLOBAL STRUCTURAL COORDINATE SYSTEM
  ---------------------------------------

  * PILE TOP DISPLACEMENTS *

   PILE GROUP   DISP. X,IN   DISP. Y,IN   DISP. Z,IN   ROT. X,RAD   ROT. Y,RAD
ROT. Z,RAD
   **********  ***********  ***********  ***********  ***********  ***********
***********
         1           0.1534     0.010270   9.1000E-05  -1.4601E-06   1.4315E-04
2.3392E-04
         2           0.1663     0.010402   9.1000E-05  -1.4601E-06   1.4315E-04
2.3392E-04
         3           0.1792     0.010533   9.1000E-05  -1.4601E-06   1.4315E-04
2.3392E-04
         4           0.1920     0.010665   9.1000E-05  -1.4601E-06   1.4315E-04
2.3392E-04
         5           0.2049     0.010796   9.1000E-05  -1.4601E-06   1.4315E-04
2.3392E-04
         6           0.1394     0.010270   3.3919E-06  -1.4601E-06   1.4315E-04
2.3392E-04
         7           0.1522     0.010402   3.3919E-06  -1.4601E-06   1.4315E-04
2.3392E-04
         8           0.1651     0.010533   3.3919E-06  -1.4601E-06   1.4315E-04
```

```
2.3392E-04
          9            0.1780     0.010665   3.3919E-06  -1.4601E-06   1.4315E-04
2.3392E-04
         10            0.1909     0.010796   3.3919E-06  -1.4601E-06   1.4315E-04
2.3392E-04
         11            0.1253     0.010270  -8.4216E-05  -1.4601E-06   1.4315E-04
2.3392E-04
         12            0.1382     0.010402  -8.4216E-05  -1.4601E-06   1.4315E-04
2.3392E-04
         13            0.1511     0.010533  -8.4216E-05  -1.4601E-06   1.4315E-04
2.3392E-04
         14            0.1640     0.010665  -8.4216E-05  -1.4601E-06   1.4315E-04
2.3392E-04
         15            0.1769     0.010796  -8.4216E-05  -1.4601E-06   1.4315E-04
2.3392E-04

       MINIMUM         0.1253     0.010270  -8.4216E-05  -1.4601E-06   1.4315E-04
2.3392E-04
       Pile N.         11            1           11            1            1
    1
       MAXIMUM         0.2049     0.010796   9.1000E-05  -1.4601E-06   1.4315E-04
2.3392E-04
       Pile N.          5            5            1            1            1
    1

       * PILE TOP REACTIONS *

      PILE GROUP   FOR. X,KIP   FOR. Y,KIP   FOR. Z,KIP MOM X,KIP-IN MOM Y,KIP-IN
MOM Z,KIP-IN
      **********  ***********  ***********  ***********  ***********  ***********
***********
          1            180.83      -20.145     0.016411       0.0000       0.0000
1.3179E-12
          2            195.14      -22.202     0.015918       0.0000       0.0000
   0.0000
          3            209.44      -24.269     0.015465       0.0000       0.0000
   0.0000
          4            223.73      -26.344     0.015046       0.0000       0.0000
   0.0000
          5            238.03      -28.428     0.014658       0.0000       0.0000
   0.0000
          6            165.59       3.3000   1.7556E-03       0.0000  -1.6087E-16
9.8506E-33
          7            179.34       3.3197   1.7447E-03       0.0000       0.0000
   0.0000
          8            193.09       3.3391   1.7339E-03  -5.8646E-30  -1.6087E-16
9.5776E-14
          9            206.84       3.3584   1.7233E-03       0.0000       0.0000
   0.0000
         10            220.59       3.3775   1.7128E-03       0.0000   1.6087E-16
```

```
-9.8506E-33
         11            152.65       21.385    -0.020787       0.0000       0.0000
   0.0000
         12            167.01       23.387    -0.019121       0.0000       0.0000
   0.0000
         13            181.38       25.417    -0.017805       0.0000       0.0000
   0.0000
         14            195.74       27.471    -0.016729       0.0000       0.0000
   0.0000
         15            210.09       29.543    -0.015827       0.0000       0.0000
   0.0000

       MINIMUM         152.65      -28.428    -0.020787  -5.8646E-30  -1.6087E-16
-9.8506E-33
       Pile N.         11            5           11            8            6
   10
       MAXIMUM         238.03       29.543     0.016411       0.0000   1.6087E-16
1.3179E-12
       Pile N.          5           15            1            1           10
    1


       THE PILE COORDINATE SYSTEM (LOCAL AXES)
       ---------------------------------------

       * PILE TOP DISPLACEMENTS *

      PILE GROUP   DISP. x,IN   DISP. y,IN   DISP. z,IN   ROT. x,RAD   ROT. y,RAD
ROT. z,RAD
      **********  ***********  ***********  ***********  ***********  ***********
***********
          1            0.1496     0.035341   9.1000E-05  -2.4968E-05   1.4096E-04
2.3392E-04
          2            0.1623     0.037588   9.1000E-05  -2.4968E-05   1.4096E-04
2.3392E-04
          3            0.1750     0.039836   9.1000E-05  -2.4968E-05   1.4096E-04
2.3392E-04
          4            0.1877     0.042083   9.1000E-05  -2.4968E-05   1.4096E-04
2.3392E-04
          5            0.2004     0.044330   9.1000E-05  -2.4968E-05   1.4096E-04
2.3392E-04
          6            0.1394   3.3919E-06    -0.010270  -1.4601E-06   2.3392E-04
-1.4315E-04
          7            0.1522   3.3919E-06    -0.010402  -1.4601E-06   2.3392E-04
-1.4315E-04
          8            0.1651   3.3919E-06    -0.010533  -1.4601E-06   2.3392E-04
-1.4315E-04
          9            0.1780   3.3919E-06    -0.010665  -1.4601E-06   2.3392E-04
-1.4315E-04
         10            0.1909   3.3919E-06    -0.010796  -1.4601E-06   2.3392E-04
```

```
-1.4315E-04
         11            0.1253    -0.010467  -8.4216E-05   2.2088E-05   1.4144E-04
2.3392E-04
         12            0.1380    -0.012455  -8.4216E-05   2.2088E-05   1.4144E-04
2.3392E-04
         13            0.1508    -0.014442  -8.4216E-05   2.2088E-05   1.4144E-04
2.3392E-04
         14            0.1635    -0.016430  -8.4216E-05   2.2088E-05   1.4144E-04
2.3392E-04
         15            0.1762    -0.018418  -8.4216E-05   2.2088E-05   1.4144E-04
2.3392E-04

       MINIMUM         0.1253    -0.018418    -0.010796  -2.4968E-05   1.4096E-04
-1.4315E-04
       Pile N.         11           15           10            1            1
    6
       MAXIMUM         0.2004     0.044330   9.1000E-05   2.2088E-05   2.3392E-04
2.3392E-04
       Pile N.          5            5            1           11            6
    1

       * PILE TOP REACTIONS *

      PILE GROUP   AXIAL,KIP    LAT. y,KIP   LAT. z,KIP MOM x,KIP-IN MOM y,KIP-IN
MOM z,KIP-IN
      **********  ***********  ***********  ***********  ***********  ***********
***********
          1            181.69       9.8505     0.016411       0.0000       0.0000
1.3179E-12
          2            196.13       10.172     0.015918       0.0000       0.0000
   0.0000
          3            210.58       10.484     0.015465       0.0000       0.0000
   0.0000
          4            225.02       10.787     0.015046       0.0000       0.0000
   0.0000
          5            239.47       11.081     0.014658       0.0000       0.0000
   0.0000
          6            165.59   1.7556E-03      -3.3000       0.0000       0.0000
1.6087E-16
          7            179.34   1.7447E-03      -3.3197       0.0000       0.0000
   0.0000
          8            193.09   1.7339E-03      -3.3391       0.0000   9.5776E-14
1.6087E-16
          9            206.84   1.7233E-03      -3.3584       0.0000       0.0000
   0.0000
         10            220.59   1.7128E-03      -3.3775       0.0000       0.0000
-1.6087E-16
         11            154.08      -3.9944    -0.020787       0.0000       0.0000
   0.0000
         12            168.59      -4.3814    -0.019121       0.0000       0.0000
```

```
   0.0000
         13            183.09      -4.7396    -0.017805       0.0000       0.0000
   0.0000
         14            197.59      -5.0742    -0.016729       0.0000       0.0000
   0.0000
         15            212.09      -5.3893    -0.015827       0.0000       0.0000
   0.0000

       MINIMUM         154.08      -5.3893      -3.3775       0.0000       0.0000
-1.6087E-16
       Pile N.         11           15           10            1            1
   10
       MAXIMUM         239.47       11.081     0.016411       0.0000   9.5776E-14
1.3179E-12
       Pile N.          5            5            1            1            8
    1

      PILE GROUP   STRESS,KIP/IN**2
      **********  ****************
          1            6.4258
          2            6.9367
          3            7.4476
          4            7.9585
          5            8.4694
          6            5.8564
          7            6.3428
          8            6.8291
          9            7.3155
         10            7.8018
         11            5.4496
         12            5.9625
         13            6.4754
         14            6.9883
         15            7.5012

       MINIMUM         5.4496
       Pile N.         11
       MAXIMUM         8.4694
       Pile N.          5

       * EFFECTS FOR LATERALLY LOADED PILE *

       * MINIMUM VALUES AND LOCATIONS *

     PILE     DISPL.      DISPL.      MOMENT      MOMENT       SHEAR       SHEAR
SOIL REACT  SOIL REACT     TOTAL    FLEX. RIG.  FLEX. RIG.
               y-DIR       z-DIR       z-DIR       y-DIR       y-DIR       z-DIR
  y-DIR       z-DIR      STRESS       z-DIR       y-DIR
               IN          IN        KIP-IN      KIP-IN        KIP         KIP
 KIP/IN      KIP/IN     KIP/IN**2   KIP-IN**2   KIP-IN**2
```

```
    ******  **********  **********  **********  **********  **********  **********
**********  **********  **********  **********  **********
        1  -4.6710E-03 -1.2903E-05     -22.564   -0.020650     -2.4251 -4.3177E-03
-0.019298 -4.3914E-05      6.4258  3.1594E+07  9.1843E+06
     x(FT)      10.640      8.3600      19.000      15.960      6.0800      5.3200
   19.760      7.6000      64.600      0.0000      0.0000
        2  -4.9087E-03 -1.2980E-05     -23.879   -0.020670     -2.4976 -4.2120E-03
-0.021340 -4.2127E-05      6.9367  3.1594E+07  9.1843E+06
     x(FT)      10.640      8.3600      19.760      15.960      6.8400      5.3200
   20.520      7.6000      0.0000      0.0000      0.0000
        3  -5.1382E-03 -1.3045E-05     -25.212   -0.020661     -2.5738 -4.1142E-03
-0.023437 -4.0528E-05      7.4476  3.1594E+07  9.1843E+06
     x(FT)      10.640      8.3600      19.760      15.960      6.8400      5.3200
   20.520      8.3600      0.0000      0.0000      0.0000
        4  -5.3599E-03 -1.3100E-05     -26.504   -0.020627     -2.6475 -4.0234E-03
-0.025495 -3.9209E-05      7.9585  3.1594E+07  9.1843E+06
     x(FT)      10.640      8.3600      19.760      15.960      6.8400      5.3200
   20.520      8.3600      0.0000      0.0000      0.0000
        5  -5.5786E-03 -1.3148E-05     -27.756   -0.020573     -2.7188 -3.9388E-03
-0.027511 -3.7982E-05      8.4694  3.1594E+07  9.1843E+06
     x(FT)      11.400      8.3600      19.760      15.960      6.8400      5.3200
   20.520      8.3600      0.0000      0.0000      0.0000
        6  -5.4985E-07   -0.010270 -4.3075E-03     -52.523 -4.8431E-04     -3.0358
-8.6260E-06     -0.1275      5.8564  3.1594E+07  9.1843E+06
     x(FT)      8.3600      0.0000      15.200      2.2800      5.3200      0.0000
   15.200      0.7600      0.0000      0.0000      0.0000
        7  -5.4791E-07   -0.010402 -4.3032E-03     -52.993 -4.8102E-04     -3.0535
-8.7302E-06     -0.1280      6.3428  3.1594E+07  9.1843E+06
     x(FT)      8.3600      0.0000      15.200      2.2800      5.3200      0.0000
   15.200      0.7600      0.0000      0.0000      0.0000
        8  -5.4596E-07   -0.010533 -4.2992E-03     -53.461 -4.7779E-04     -3.0711
-8.8366E-06     -0.1285      6.8291  3.1594E+07  9.1843E+06
     x(FT)      8.3600      0.0000      15.200      2.2800      5.3200      0.0000
   15.200      0.7600      47.120      0.0000      0.0000
        9  -5.4401E-07   -0.010664 -4.2953E-03     -53.928 -4.7461E-04     -3.0884
-8.9455E-06     -0.1290      7.3155  3.1594E+07  9.1843E+06
     x(FT)      8.3600      0.0000      15.200      2.2800      5.3200      0.0000
   15.200      0.7600      0.0000      0.0000      0.0000
       10  -5.4205E-07   -0.010796 -4.2917E-03     -54.393 -4.7148E-04     -3.1056
-9.0569E-06     -0.1295      7.8018  3.1594E+07  9.1843E+06
     x(FT)      8.3600      0.0000      15.200      2.2800      5.3200      0.0000
   15.200      0.7600      0.0000      0.0000      0.0000
       11    -0.010467 -8.4216E-05     -87.675     -0.3467     -3.7788   -0.019052
  -0.1115 -7.5173E-04      5.4496  3.1594E+07  9.1843E+06
     x(FT)      0.0000      0.0000      3.0400      3.0400      0.0000      0.0000
   3.0400      0.7600      0.0000      0.0000      0.0000
       12    -0.012454 -8.4216E-05     -98.579     -0.3300     -4.1429   -0.017509
  -0.1220 -6.6506E-04      5.9625  3.1594E+07  9.1843E+06
     x(FT)      0.0000      0.0000      3.8000      3.0400      0.0000      0.0000
   3.0400      0.7600      0.0000      0.0000      0.0000
```

```
      13    -0.014442 -8.4216E-05     -109.41     -0.3161     -4.4796   -0.016289
  -0.1316 -5.9905E-04      6.4754  3.1594E+07  9.1843E+06
     x(FT)      0.0000      0.0000      3.8000      3.0400      0.0000      0.0000
   3.0400      0.7600      0.0000      0.0000      0.0000
      14    -0.016430 -8.4216E-05     -119.69     -0.3043     -4.7940   -0.015292
  -0.1404 -5.4684E-04      6.9883  3.1594E+07  9.1843E+06
     x(FT)      0.0000      0.0000      3.8000      3.0400      0.0000      0.0000
   3.0400      0.7600      0.0000      0.0000      0.0000
      15    -0.018418 -8.4216E-05     -129.52     -0.2942     -5.0899   -0.014457
  -0.1486 -5.0436E-04      7.5012  3.1594E+07  9.1843E+06
     x(FT)      0.0000      0.0000      3.8000      3.0400      0.0000      0.0000
   3.0400      0.7600      0.0000      0.0000      0.0000

     Min.   -0.018418   -0.010796     -129.52     -54.393     -5.0899     -3.1056
  -0.1486     -0.1295      5.4496  3.1594E+07  9.1843E+06
   Pile N.      15          10          15          10          15          10
   15          10          11           1           1

      * MAXIMUM VALUES AND LOCATIONS *

     PILE     DISPL.      DISPL.      MOMENT      MOMENT       SHEAR       SHEAR
SOIL REACT  SOIL REACT     TOTAL    FLEX. RIG.  FLEX. RIG.
               y-DIR       z-DIR       z-DIR       y-DIR       y-DIR       z-DIR
  y-DIR       z-DIR      STRESS       z-DIR       y-DIR
               IN          IN        KIP-IN      KIP-IN        KIP         KIP
 KIP/IN      KIP/IN     KIP/IN**2   KIP-IN**2   KIP-IN**2
    ******  **********  **********  **********  **********  **********  **********
**********  **********  **********  **********  **********
        1     0.035341  9.1000E-05      238.43      0.3057      9.2042    0.014747
   0.2672  4.9682E-04      7.8921  3.1594E+07  9.1843E+06
     x(FT)      0.0000      0.0000      3.8000      3.0400      0.0000      0.0000
   3.0400      0.7600      3.8000      0.0000      0.0000
        2     0.037589  9.1000E-05      248.67      0.3000      9.5024    0.014296
   0.2752  4.7554E-04      8.4660  3.1594E+07  9.1843E+06
     x(FT)      0.0000      0.0000      3.8000      3.0400      0.0000      0.0000
   3.0400      0.7600      3.8000      0.0000      0.0000
        3     0.039836  9.1000E-05      258.69      0.2948      9.7912    0.013882
   0.2830  4.5632E-04      9.0385  3.1594E+07  9.1843E+06
     x(FT)      0.0000      0.0000      3.8000      3.0400      0.0000      0.0000
   3.0400      0.7600      3.8000      0.0000      0.0000
        4     0.042083  9.1000E-05      268.50      0.2899      10.071    0.013499
   0.2905  4.3886E-04      9.6098  3.1594E+07  9.1843E+06
     x(FT)      0.0000      0.0000      3.8000      3.0400      0.0000      0.0000
   3.0400      0.7600      3.8000      0.0000      0.0000
        5     0.044330  9.1000E-05      278.11      0.2853      10.343    0.013144
   0.2978  4.2323E-04      10.180  3.1594E+07  9.1843E+06
     x(FT)      0.0000      0.0000      3.8000      3.0400      0.0000      0.0000
   3.0400      1.5200      3.8000      0.0000      0.0000
        6   3.3919E-06  1.5104E-03    0.037160      3.7317  1.6684E-03      0.9086
5.7061E-05    0.025113      6.9676  3.1594E+07  9.1843E+06
```

```
     x(FT)      0.0000      6.8400      3.8000      12.920      0.0000      3.8000
   2.2800      4.5600      2.2800      0.0000      0.0000
        7   3.3919E-06  1.5349E-03    0.037003      3.7880  1.6579E-03      0.9141
5.6740E-05    0.025067      7.4639  3.1594E+07  9.1843E+06
     x(FT)      0.0000      6.8400      3.8000      12.920      0.0000      3.8000
   2.2800      4.5600      2.2800      0.0000      0.0000
        8   3.3919E-06  1.5594E-03    0.036849      3.8442  1.6475E-03      0.9197
5.6425E-05    0.025021      7.9601  3.1594E+07  9.1843E+06
     x(FT)      0.0000      6.8400      3.8000      12.920      0.0000      3.8000
   2.2800      4.5600      2.2800      0.0000      0.0000
        9   3.3919E-06  1.5839E-03    0.036697      3.9004  1.6374E-03      0.9253
5.6115E-05    0.024974      8.4563  3.1594E+07  9.1843E+06
     x(FT)      0.0000      6.8400      3.8000      12.920      0.0000      3.8000
   2.2800      4.5600      2.2800      0.0000      0.0000
       10   3.3919E-06  1.6085E-03    0.036548      3.9565  1.6274E-03      0.9309
5.5811E-05    0.024925      8.9525  3.1594E+07  9.1843E+06
     x(FT)      0.0000      6.8400      3.8000      12.920      0.0000      3.8000
   2.2800      4.5600      2.2800      0.0000      0.0000
       11   1.5619E-03  1.1245E-05      7.3657    0.020199      1.0140  5.8140E-03
8.3124E-03  8.9298E-05      5.9889  3.1594E+07  9.1843E+06
     x(FT)      9.8800      7.6000      18.240      14.440      5.3200      4.5600
   11.400      5.3200      3.0400      0.0000      0.0000
       12   1.8299E-03  1.1510E-05      8.6274    0.020025      1.1102  5.2679E-03
8.8814E-03  7.3471E-05      6.5688  3.1594E+07  9.1843E+06
     x(FT)      9.8800      7.6000      18.240      14.440      6.0800      4.5600
   12.160      5.3200      3.8000      0.0000      0.0000
       13   2.0793E-03  1.1746E-05      9.7914    0.019924      1.1979  4.8311E-03
9.4180E-03  6.1212E-05      7.1483  3.1594E+07  9.1843E+06
     x(FT)      9.8800      8.3600      19.000      15.200      6.0800      4.5600
   12.160      5.3200      3.8000      0.0000      0.0000
       14   2.3192E-03  1.1978E-05      11.050    0.019866      1.2774  4.4725E-03
9.9270E-03  5.1447E-05      7.7244  3.1594E+07  9.1843E+06
     x(FT)      10.640      8.3600      19.000      15.200      6.0800      4.5600
   12.920      5.3200      3.8000      0.0000      0.0000
       15   2.5590E-03  1.2152E-05      12.225    0.019683      1.3505  4.1903E-03
 0.010405  4.3685E-05      8.2978  3.1594E+07  9.1843E+06
     x(FT)      10.640      8.3600      19.000      15.200      6.0800      5.3200
   13.680      6.8400      3.8000      0.0000      0.0000

      Max.    0.044330  1.6085E-03      278.11      3.9565      10.343      0.9309
   0.2978    0.025113      10.180  3.1594E+07  9.1843E+06
   Pile N.       5          10           5          10           5          10
    5           6           5           1           1


     LOAD CASE :     5
     CASE NAME : STR I Min-L1

     LOAD TYPE : Dead, DL
```

REDUCTION FACTORS FOR CLOSELY-SPACED PILE GROUPS, COMBINED Y AND Z DIRECTIONS
ESTIMATED USING MOVEMENT IN THE DIRECTION OF PILE CAP DISPLACEMENTS

GROUP NO	P-FACTOR	Y-FACTOR
1	0.8600	1.0000
2	0.8600	1.0000
3	0.8600	1.0000
4	0.8600	1.0000
5	0.8600	1.0000
6	0.7210	1.0000
7	0.7210	1.0000
8	0.7210	1.0000
9	0.7210	1.0000
10	0.7210	1.0000
11	0.5820	1.0000
12	0.5820	1.0000
13	0.5820	1.0000
14	0.5820	1.0000
15	0.5820	1.0000

* TABLE L * COMPUTATION ON PILE CAP

* EQUIVALENT CONCENTRATED LOAD AT ORIGIN *

VERT. LOAD,KIPS	HOR. LOAD Y,KIPS	HOR. LOAD Z,KIPS
1986.29	30.9100	0.00000
MOMENT X ,KIP-IN	**MOMENT Y,KIP-IN**	**MOMENT Z,KIP-IN**
0.00000	50386.2	8261.37

* DISPLACEMENT OF GROUPED PILE FOUNDATION AT ORIGIN *

VERTICAL ,IN	HORIZONTAL Y,IN	HORIZONTAL Z,IN
0.10845	0.0100628	4.26641E-05
ANGLE ROT. X,RAD	**ANGLE ROT. Y,RAD**	**ANGLE ROT. Z,RAD**
-5.26312E-06	1.88764E-04	2.30549E-04

* PASSIVE RESISTANCE IN PILE CAP *

HOR. LOAD Y,KIP	HOR. LOAD Z,KIP	POSITION, FT	EQ. DIAM, FT

```
                5.76400        7.89449E-04           -1.55556            35.1141


       THE GLOBAL STRUCTURAL COORDINATE SYSTEM
       ---------------------------------------

       * PILE TOP DISPLACEMENTS *

      PILE GROUP   DISP. X,IN   DISP. Y,IN   DISP. Z,IN   ROT. X,RAD   ROT. Y,RAD
ROT. Z,RAD
      **********  ***********  ***********  ***********  ***********  ***********
***********
          1          0.088309   9.1155E-03   3.5845E-04  -5.2631E-06   1.8876E-04
2.3055E-04
          2            0.1053   9.5891E-03   3.5845E-04  -5.2631E-06   1.8876E-04
2.3055E-04
          3            0.1223     0.010063   3.5845E-04  -5.2631E-06   1.8876E-04
2.3055E-04
          4            0.1393     0.010537   3.5845E-04  -5.2631E-06   1.8876E-04
2.3055E-04
          5            0.1563     0.011010   3.5845E-04  -5.2631E-06   1.8876E-04
2.3055E-04
          6          0.074476   9.1155E-03   4.2664E-05  -5.2631E-06   1.8876E-04
2.3055E-04
          7          0.091465   9.5891E-03   4.2664E-05  -5.2631E-06   1.8876E-04
2.3055E-04
          8            0.1085     0.010063   4.2664E-05  -5.2631E-06   1.8876E-04
2.3055E-04
          9            0.1254     0.010537   4.2664E-05  -5.2631E-06   1.8876E-04
2.3055E-04
         10            0.1424     0.011010   4.2664E-05  -5.2631E-06   1.8876E-04
2.3055E-04
         11          0.060643   9.1155E-03  -2.7312E-04  -5.2631E-06   1.8876E-04
2.3055E-04
         12          0.077632   9.5891E-03  -2.7312E-04  -5.2631E-06   1.8876E-04
2.3055E-04
         13          0.094620     0.010063  -2.7312E-04  -5.2631E-06   1.8876E-04
2.3055E-04
         14            0.1116     0.010537  -2.7312E-04  -5.2631E-06   1.8876E-04
2.3055E-04
         15            0.1286     0.011010  -2.7312E-04  -5.2631E-06   1.8876E-04
2.3055E-04

       MINIMUM       0.060643   9.1155E-03  -2.7312E-04  -5.2631E-06   1.8876E-04
2.3055E-04
       Pile N.         11            1           11            1            1
    1
       MAXIMUM         0.1563     0.011010   3.5845E-04  -5.2631E-06   1.8876E-04
2.3055E-04
       Pile N.          5            5            1            1            1
```

1

* PILE TOP REACTIONS *

PILE GROUP	FOR. X,KIP	FOR. Y,KIP	FOR. Z,KIP	MOM X,KIP-IN	MOM Y,KIP-IN	MOM Z,KIP-IN
**********	**********	**********	**********	**********	**********	**********
1	108.63	-10.044	0.078853	0.0000	0.0000	0.0000
2	127.46	-12.608	0.074058	0.0000	0.0000	0.0000
3	146.28	-15.206	0.070039	0.0000	0.0000	0.0000
4	165.10	-17.831	0.066602	0.0000	0.0000	0.0000
5	183.91	-20.480	0.063615	0.0000	0.0000	0.0000
6	96.341	3.1080	0.023335	0.0000	0.0000	0.0000
7	114.47	3.1905	0.022810	0.0000	0.0000	0.0000
8	132.61	3.2709	0.022319	-5.8646E-30	5.8646E-30	9.5776E-14
9	150.74	3.3493	0.021859	0.0000	0.0000	0.0000
10	168.87	3.4257	0.021426	0.0000	0.0000	0.0000
11	80.269	12.258	-0.1985	-4.9193E-16	2.9523E-15	-4.1183E-14
12	99.361	14.368	-0.1167	0.0000	0.0000	1.6473E-13
13	118.40	16.820	-0.090657	0.0000	0.0000	0.0000
14	137.41	19.399	-0.076864	4.9193E-16	-2.9523E-15	0.0000
15	156.41	22.053	-0.067974	-4.9193E-16	2.9523E-15	0.0000
MINIMUM	80.269	-20.480	-0.1985	-4.9193E-16	-2.9523E-15	-4.1183E-14
Pile N.	11	5	11	11	14	11
MAXIMUM	183.91	22.053	0.078853	4.9193E-16	2.9523E-15	1.6473E-13
Pile N.	5	15	1	14	11	12

THE PILE COORDINATE SYSTEM (LOCAL AXES)

```
      ---------------------------------------

      * PILE TOP DISPLACEMENTS *

     PILE GROUP   DISP. x,IN   DISP. y,IN   DISP. z,IN   ROT. x,RAD   ROT. y,RAD
ROT. z,RAD
     **********  ***********  ***********  ***********  ***********  ***********
***********
         1          0.085610     0.023506   3.5845E-04  -3.6217E-05   1.8533E-04
2.3055E-04
         2            0.1023     0.026765   3.5845E-04  -3.6217E-05   1.8533E-04
2.3055E-04
         3            0.1190     0.030025   3.5845E-04  -3.6217E-05   1.8533E-04
2.3055E-04
         4            0.1356     0.033284   3.5845E-04  -3.6217E-05   1.8533E-04
2.3055E-04
         5            0.1523     0.036544   3.5845E-04  -3.6217E-05   1.8533E-04
2.3055E-04
         6          0.074476   4.2664E-05  -9.1155E-03  -5.2631E-06   2.3055E-04
-1.8876E-04
         7          0.091465   4.2664E-05  -9.5891E-03  -5.2631E-06   2.3055E-04
-1.8876E-04
         8            0.1085   4.2664E-05    -0.010063  -5.2631E-06   2.3055E-04
-1.8876E-04
         9            0.1254   4.2664E-05    -0.010537  -5.2631E-06   2.3055E-04
-1.8876E-04
        10            0.1424   4.2664E-05    -0.011010  -5.2631E-06   2.3055E-04
-1.8876E-04
        11          0.061316  -9.7571E-04  -2.7312E-04   2.5833E-05   1.8706E-04
2.3055E-04
        12          0.078152  -3.3007E-03  -2.7312E-04   2.5833E-05   1.8706E-04
2.3055E-04
        13          0.094988  -5.6257E-03  -2.7312E-04   2.5833E-05   1.8706E-04
2.3055E-04
        14            0.1118  -7.9508E-03  -2.7312E-04   2.5833E-05   1.8706E-04
2.3055E-04
        15            0.1287    -0.010276  -2.7312E-04   2.5833E-05   1.8706E-04
2.3055E-04

      MINIMUM       0.061316    -0.010276    -0.011010  -3.6217E-05   1.8533E-04
-1.8876E-04
      Pile N.         11           15           10           1            1
   6
      MAXIMUM         0.1523     0.036544   3.5845E-04   2.5833E-05   2.3055E-04
2.3055E-04
      Pile N.          5            5            1           11            6
   1

      * PILE TOP REACTIONS *
```

PILE GROUP	AXIAL,KIP	LAT. y,KIP	LAT. z,KIP	MOM x,KIP-IN	MOM y,KIP-IN	MOM z,KIP-IN
**********	**********	**********	**********	**********	**********	**********
1	108.81	7.9473	0.078853	0.0000	0.0000	0.0000
2	127.80	8.5124	0.074058	0.0000	0.0000	0.0000
3	146.79	9.0441	0.070039	0.0000	0.0000	0.0000
4	165.78	9.5473	0.066602	0.0000	0.0000	0.0000
5	184.78	10.026	0.063615	0.0000	0.0000	0.0000
6	96.341	0.023335	-3.1080	0.0000	0.0000	0.0000
7	114.47	0.022810	-3.1905	0.0000	0.0000	0.0000
8	132.61	0.022319	-3.2709	0.0000	9.5776E-14	0.0000
9	150.74	0.021859	-3.3493	0.0000	0.0000	0.0000
10	168.87	0.021426	-3.4257	0.0000	0.0000	0.0000
11	81.192	-1.1013	-0.1985	0.0000	2.9930E-15	-4.1183E-14
12	100.37	-2.1581	-0.1167	0.0000	0.0000	1.6473E-13
13	119.55	-2.8679	-0.090657	0.0000	0.0000	0.0000
14	138.73	-3.4491	-0.076864	0.0000	-2.9930E-15	0.0000
15	157.91	-3.9543	-0.067974	0.0000	2.9930E-15	0.0000
MINIMUM	81.192	-3.9543	-3.4257	0.0000	-2.9930E-15	-4.1183E-14
Pile N.	11	15	10	1	14	11
MAXIMUM	184.78	10.026	0.078853	0.0000	9.5776E-14	1.6473E-13
Pile N.	5	5	1	1	8	12

PILE GROUP	STRESS,KIP/IN**2
**********	**********
1	3.8483
2	4.5200
3	5.1917
4	5.8634

```
          5            6.5351
          6            3.4074
          7            4.0487
          8            4.6900
          9            5.3313
         10            5.9726
         11            2.8716
         12            3.5499
         13            4.2282
         14            4.9066
         15            5.5849

       MINIMUM         2.8716
       Pile N.         11
       MAXIMUM         6.5351
       Pile N.          5

       * EFFECTS FOR LATERALLY LOADED PILE *

       * MINIMUM VALUES AND LOCATIONS *

     PILE     DISPL.      DISPL.      MOMENT      MOMENT       SHEAR       SHEAR
SOIL REACT  SOIL REACT     TOTAL    FLEX. RIG.  FLEX. RIG.
               y-DIR       z-DIR       z-DIR       y-DIR       y-DIR       z-DIR
  y-DIR       z-DIR      STRESS       z-DIR       y-DIR
                IN          IN        KIP-IN      KIP-IN        KIP         KIP
 KIP/IN      KIP/IN     KIP/IN**2   KIP-IN**2   KIP-IN**2
    ******  **********  **********  **********  **********  **********  **********
**********  **********  **********  **********  **********
        1  -3.3021E-03 -4.8082E-05     -15.699   -0.082903     -1.9870   -0.020899
-0.015869 -2.7385E-04      3.8483  3.1594E+07  9.1843E+06
     x(FT)      9.8800      8.3600      18.240      15.200      6.0800      4.5600
   12.160      5.3200      0.0000      0.0000      0.0000
        2  -3.6828E-03 -4.9102E-05     -17.652   -0.083028     -2.1203   -0.019337
-0.016704 -2.2937E-04      4.5200  3.1594E+07  9.1843E+06
     x(FT)      10.640      8.3600      19.000      15.200      6.0800      4.5600
   12.920      5.3200      0.0000      0.0000      0.0000
        3  -4.0732E-03 -4.9881E-05     -19.613   -0.082591     -2.2428   -0.018137
-0.017496 -1.9329E-04      5.1917  3.1594E+07  9.1843E+06
     x(FT)      10.640      8.3600      19.000      15.200      6.0800      5.3200
   12.920      5.3200      0.0000      0.0000      0.0000
        4  -4.4437E-03 -5.0483E-05     -21.451   -0.081770     -2.3562   -0.017413
-0.018283 -1.7992E-04      5.8634  3.1594E+07  9.1843E+06
     x(FT)      10.640      8.3600      19.000      15.200      6.0800      5.3200
   13.680      7.6000      0.0000      0.0000      0.0000
        5  -4.7951E-03 -5.0950E-05     -23.231   -0.081325     -2.4622   -0.016771
-0.020422 -1.6902E-04      6.5351  3.1594E+07  9.1843E+06
     x(FT)      10.640      8.3600      19.760      15.960      6.0800      5.3200
   20.520      7.6000      0.0000      0.0000      0.0000
        6  -7.0624E-06 -9.1155E-03   -0.054625     -48.376 -6.5063E-03     -2.8615
```

```
-1.0070E-04     -0.1231      3.4074  3.1594E+07  9.1843E+06
     x(FT)      8.3600      0.0000      15.200      2.2800      4.5600      0.0000
   15.200      0.7600      0.0000      0.0000      0.0000
        7  -7.0166E-06 -9.5891E-03   -0.054439     -50.083 -6.3264E-03     -2.9367
-1.0303E-04     -0.1249      4.0487  3.1594E+07  9.1843E+06
     x(FT)      8.3600      0.0000      15.200      2.2800      4.5600      0.0000
   15.200      0.7600      0.0000      0.0000      0.0000
        8  -6.9661E-06   -0.010063   -0.054210     -51.764 -6.1676E-03     -3.0099
-1.0525E-04     -0.1268      4.6900  3.1594E+07  9.1843E+06
     x(FT)      8.3600      0.0000      15.200      2.2800      5.3200      0.0000
   15.200      0.7600      47.880      0.0000      0.0000
        9  -6.9118E-06   -0.010537   -0.053945     -53.419 -6.0430E-03     -3.0812
-1.0740E-04     -0.1285      5.3313  3.1594E+07  9.1843E+06
     x(FT)      8.3600      0.0000      15.200      2.2800      5.3200      0.0000
   15.200      0.7600      0.0000      0.0000      0.0000
       10  -6.8542E-06   -0.011010   -0.053653     -55.051 -5.9240E-03     -3.1506
-1.0948E-04     -0.1302      5.9726  3.1594E+07  9.1843E+06
     x(FT)      8.3600      0.0000      15.200      2.2800      5.3200      0.0000
   15.200      0.7600      0.0000      0.0000      0.0000
       11  -9.7571E-04 -2.7312E-04     -17.495     -2.4405     -1.0664     -0.1887
-0.048656   -0.012206      2.8716  3.1594E+07  9.1843E+06
     x(FT)      0.0000      0.0000      2.2800      1.5200      0.0000      0.0000
   0.7600      0.7600      53.200      0.0000      0.0000
       12  -3.3007E-03 -2.7312E-04     -40.068     -1.6695     -2.0481     -0.1076
-0.071439 -5.4392E-03      3.5499  3.1594E+07  9.1843E+06
     x(FT)      0.0000      0.0000      3.0400      2.2800      0.0000      0.0000
   0.7600      0.7600      57.760      0.0000      0.0000
       13  -5.6257E-03 -2.7312E-04     -57.865     -1.3952     -2.7177   -0.083365
-0.084204 -3.7633E-03      4.2282  3.1594E+07  9.1843E+06
     x(FT)      0.0000      0.0000      3.0400      2.2800      0.0000      0.0000
   1.5200      0.7600      0.0000      0.0000      0.0000
       14  -7.9508E-03 -2.7312E-04     -73.058     -1.2364     -3.2654   -0.070554
-0.096398 -2.9561E-03      4.9066  3.1594E+07  9.1843E+06
     x(FT)      0.0000      0.0000      3.0400      2.2800      0.0000      0.0000
   3.0400      0.7600      0.0000      0.0000      0.0000
       15    -0.010276 -2.7312E-04     -86.622     -1.1304     -3.7410   -0.062305
  -0.1104 -2.4692E-03      5.5849  3.1594E+07  9.1843E+06
     x(FT)      0.0000      0.0000      3.0400      3.0400      0.0000      0.0000
   3.0400      0.7600      0.0000      0.0000      0.0000

      Min.   -0.010276   -0.011010     -86.622     -55.051     -3.7410     -3.1506
  -0.1104     -0.1302      2.8716  3.1594E+07  9.1843E+06
   Pile N.      15          10          15          10          15          10
   15          10          11           1           1

       * MAXIMUM VALUES AND LOCATIONS *

     PILE     DISPL.      DISPL.      MOMENT      MOMENT       SHEAR       SHEAR
SOIL REACT  SOIL REACT     TOTAL    FLEX. RIG.  FLEX. RIG.
               y-DIR       z-DIR       z-DIR       y-DIR       y-DIR       z-DIR
```

```
  y-DIR       z-DIR      STRESS       z-DIR       y-DIR
                IN          IN        KIP-IN      KIP-IN        KIP         KIP
 KIP/IN      KIP/IN     KIP/IN**2   KIP-IN**2   KIP-IN**2
    ******  **********  **********  **********  **********  **********  **********
**********  **********  **********  **********  **********
        1     0.023506  3.5845E-04      179.78      1.3593      7.4374    0.071077
   0.2183  2.6119E-03      4.9542  3.1594E+07  9.1843E+06
     x(FT)      0.0000      0.0000      3.8000      3.0400      0.0000      0.0000
   3.0400      0.7600      3.8000      0.0000      0.0000
        2     0.026765  3.5845E-04      196.84      1.3084      7.9625    0.066694
   0.2330  2.3829E-03      5.7308  3.1594E+07  9.1843E+06
     x(FT)      0.0000      0.0000      3.8000      3.0400      0.0000      0.0000
   3.0400      0.7600      3.8000      0.0000      0.0000
        3     0.030025  3.5845E-04      213.15      1.2645      8.4562    0.063021
   0.2467  2.1968E-03      6.5028  3.1594E+07  9.1843E+06
     x(FT)      0.0000      0.0000      3.8000      3.0400      0.0000      0.0000
   3.0400      0.7600      3.8000      0.0000      0.0000
        4     0.033284  3.5845E-04      228.80      1.2260      8.9231    0.059880
   0.2595  2.0420E-03      7.2707  3.1594E+07  9.1843E+06
     x(FT)      0.0000      0.0000      3.8000      3.0400      0.0000      0.0000
   3.0400      0.7600      3.8000      0.0000      0.0000
        5     0.036544  3.5845E-04      243.89      1.1918      9.3667    0.057150
   0.2716  1.9111E-03      8.0352  3.1594E+07  9.1843E+06
     x(FT)      0.0000      0.0000      3.8000      3.0400      0.0000      0.0000
   3.0400      0.7600      3.8000      0.0000      0.0000
        6   4.2664E-05  1.3030E-03      0.4826      3.2518    0.022182      0.8658
7.6162E-04    0.025361      4.4308  3.1594E+07  9.1843E+06
     x(FT)      0.0000      6.8400      3.8000      12.920      0.0000      3.8000
   2.2800      4.5600      2.2800      0.0000      0.0000
        7   4.2664E-05  1.3867E-03      0.4768      3.4462    0.021681      0.8823
7.4174E-04    0.025293      5.1082  3.1594E+07  9.1843E+06
     x(FT)      0.0000      6.8400      3.8000      12.920      0.0000      3.8000
   2.2800      4.5600      2.2800      0.0000      0.0000
        8   4.2664E-05  1.4705E-03      0.4711      3.6383    0.021213      0.8982
7.2337E-04    0.025191      5.7851  3.1594E+07  9.1843E+06
     x(FT)      0.0000      6.8400      3.8000      12.920      0.0000      3.8000
   2.2800      4.5600      2.2800      0.0000      0.0000
        9   4.2664E-05  1.5543E-03      0.4657      3.8282    0.020773      0.9136
7.0632E-04    0.025057      6.4614  3.1594E+07  9.1843E+06
     x(FT)      0.0000      6.8400      3.8000      12.920      0.0000      3.8000
   2.2800      4.5600      2.2800      0.0000      0.0000
       10   4.2664E-05  1.6381E-03      0.4604      4.0158    0.020360      0.9287
6.9045E-04    0.024896      7.1373  3.1594E+07  9.1843E+06
     x(FT)      0.0000      6.8400      3.8000      12.920      0.0000      3.8000
   2.2800      4.5600      2.2800      0.0000      0.0000
       11   1.2489E-04  1.8703E-05      0.8389    0.059017      0.3555    0.070207
 0.012334  4.3203E-03      2.9904  3.1594E+07  9.1843E+06
     x(FT)      6.8400      5.3200      13.680      9.8800      3.8000      3.8000
   4.5600      4.5600      2.2800      0.0000      0.0000
       12   4.9379E-04  2.7730E-05      2.6334    0.063795      0.5566    0.039794
```

```
5.7160E-03  1.6766E-03      3.7984  3.1594E+07  9.1843E+06
     x(FT)      8.3600      6.8400      15.960      12.160      4.5600      3.8000
   5.3200      4.5600      3.0400      0.0000      0.0000
       13   8.5895E-04  3.2013E-05      4.2790    0.065006      0.7462    0.028303
6.6421E-03  8.4258E-04      4.5852  3.1594E+07  9.1843E+06
     x(FT)      9.1200      6.8400      16.720      12.920      5.3200      3.8000
   9.1200      4.5600      3.0400      0.0000      0.0000
       14   1.2067E-03  3.4695E-05      5.8011    0.065648      0.8904    0.022062
7.5053E-03  4.4129E-04      5.3566  3.1594E+07  9.1843E+06
     x(FT)      9.1200      7.6000      17.480      13.680      5.3200      3.8000
   9.8800      4.5600      3.0400      0.0000      0.0000
       15   1.5358E-03  3.6408E-05      7.2411    0.065583      1.0057    0.019052
8.2524E-03  2.9394E-04      6.1181  3.1594E+07  9.1843E+06
     x(FT)      9.8800      7.6000      18.240      14.440      5.3200      4.5600
   11.400      5.3200      3.0400      0.0000      0.0000

      Max.    0.036544  1.6381E-03      243.89      4.0158      9.3667      0.9287
   0.2716    0.025361      8.0352  3.1594E+07  9.1843E+06
   Pile N.       5          10           5          10           5          10
    5           6           5           1           1


     LOAD CASE :     6
     CASE NAME : STR I Min-L2

     LOAD TYPE : Dead, DL

       REDUCTION FACTORS FOR CLOSELY-SPACED PILE GROUPS, COMBINED Y AND Z DIRECTIONS
       ESTIMATED USING MOVEMENT IN THE DIRECTION OF PILE CAP DISPLACEMENTS

            GROUP NO     P-FACTOR     Y-FACTOR

                1           0.8600       1.0000
                2           0.8600       1.0000
                3           0.8600       1.0000
                4           0.8600       1.0000
                5           0.8600       1.0000
                6           0.7210       1.0000
                7           0.7210       1.0000
                8           0.7210       1.0000
                9           0.7210       1.0000
               10           0.7210       1.0000
               11           0.5820       1.0000
               12           0.5820       1.0000
               13           0.5820       1.0000
               14           0.5820       1.0000
               15           0.5820       1.0000
```

```
* TABLE L *   COMPUTATION ON PILE CAP


* EQUIVALENT CONCENTRATED LOAD AT ORIGIN *


      VERT. LOAD,KIPS    HOR. LOAD Y,KIPS   HOR. LOAD Z,KIPS
            2240.76            30.9100            0.00000

     MOMENT X ,KIP-IN    MOMENT Y,KIP-IN    MOMENT Z,KIP-IN
            0.00000            38171.4            8261.37


* DISPLACEMENT OF GROUPED PILE FOUNDATION AT ORIGIN *


       VERTICAL ,IN      HORIZONTAL Y,IN     HORIZONTAL Z,IN
            0.12390          0.0103956        1.37367E-05

     ANGLE ROT. X,RAD    ANGLE ROT. Y,RAD    ANGLE ROT. Z,RAD
       -2.80218E-06        1.43068E-04        2.32109E-04


* PASSIVE RESISTANCE IN PILE CAP *

        HOR. LOAD Y,KIP    HOR. LOAD Z,KIP      POSITION, FT      EQ. DIAM, FT
            6.46279        1.24754E-03           -1.55556           35.1141


  THE GLOBAL STRUCTURAL COORDINATE SYSTEM
  ---------------------------------------

  * PILE TOP DISPLACEMENTS *

   PILE GROUP   DISP. X,IN   DISP. Y,IN   DISP. Z,IN   ROT. X,RAD   ROT. Y,RAD
ROT. Z,RAD
   **********  ***********  ***********  ***********  ***********  ***********
***********
         1           0.1121   9.8912E-03   1.8187E-04  -2.8022E-06   1.4307E-04
2.3211E-04
         2           0.1250     0.010143   1.8187E-04  -2.8022E-06   1.4307E-04
2.3211E-04
         3           0.1378     0.010396   1.8187E-04  -2.8022E-06   1.4307E-04
2.3211E-04
         4           0.1507     0.010648   1.8187E-04  -2.8022E-06   1.4307E-04
2.3211E-04
         5           0.1636     0.010900   1.8187E-04  -2.8022E-06   1.4307E-04
2.3211E-04
         6         0.098145   9.8912E-03   1.3737E-05  -2.8022E-06   1.4307E-04
```

```
2.3211E-04
          7            0.1110     0.010143   1.3737E-05  -2.8022E-06   1.4307E-04
2.3211E-04
          8            0.1239     0.010396   1.3737E-05  -2.8022E-06   1.4307E-04
2.3211E-04
          9            0.1368     0.010648   1.3737E-05  -2.8022E-06   1.4307E-04
2.3211E-04
         10            0.1497     0.010900   1.3737E-05  -2.8022E-06   1.4307E-04
2.3211E-04
         11          0.084218   9.8912E-03  -1.5439E-04  -2.8022E-06   1.4307E-04
2.3211E-04
         12          0.097094     0.010143  -1.5439E-04  -2.8022E-06   1.4307E-04
2.3211E-04
         13            0.1100     0.010396  -1.5439E-04  -2.8022E-06   1.4307E-04
2.3211E-04
         14            0.1229     0.010648  -1.5439E-04  -2.8022E-06   1.4307E-04
2.3211E-04
         15            0.1357     0.010900  -1.5439E-04  -2.8022E-06   1.4307E-04
2.3211E-04

       MINIMUM       0.084218   9.8912E-03  -1.5439E-04  -2.8022E-06   1.4307E-04
2.3211E-04
       Pile N.         11            1           11            1            1
    1
       MAXIMUM         0.1636     0.010900   1.8187E-04  -2.8022E-06   1.4307E-04
2.3211E-04
       Pile N.          5            5            1            1            1
    1

       * PILE TOP REACTIONS *

      PILE GROUP   FOR. X,KIP   FOR. Y,KIP   FOR. Z,KIP MOM X,KIP-IN MOM Y,KIP-IN
MOM Z,KIP-IN
      **********  ***********  ***********  ***********  ***********  ***********
***********
          1            134.95      -13.618     0.036654       0.0000       0.0000
   0.0000
          2            149.23      -15.614     0.035242       0.0000       0.0000
-1.3179E-12
          3            163.51      -17.623     0.033980       0.0000       0.0000
-1.3179E-12
          4            177.78      -19.646     0.032840       0.0000       0.0000
1.3179E-12
          5            192.06      -21.681     0.031805       0.0000       0.0000
   0.0000
          6            121.60       3.2430   7.2445E-03   5.8646E-30  -6.4349E-16
-9.5776E-14
          7            135.35       3.2845   7.1608E-03   5.8646E-30  -6.4349E-16
-9.5776E-14
          8            149.09       3.3254   7.0799E-03       0.0000       0.0000
```

```
   0.0000
          9            162.83       3.3656   7.0015E-03   5.8646E-30  -5.8646E-30
-9.5776E-14
         10            176.58       3.4053   6.9256E-03       0.0000   6.4349E-16
-3.9402E-32
         11            106.76       15.337    -0.059689  -2.4596E-16   1.4761E-15
   0.0000
         12            121.17       17.193    -0.049901   2.4596E-16  -1.4761E-15
   0.0000
         13            135.56       19.122    -0.043805  -2.4596E-16   1.4761E-15
   0.0000
         14            149.95       21.100    -0.039536  -2.4596E-16   1.4761E-15
   0.0000
         15            164.33       23.114    -0.036328   2.4596E-16  -1.4761E-15
   0.0000

       MINIMUM         106.76      -21.681    -0.059689  -2.4596E-16  -1.4761E-15
-1.3179E-12
       Pile N.         11            5           11           11           12
    2
       MAXIMUM         192.06       23.114     0.036654   2.4596E-16   1.4761E-15
1.3179E-12
       Pile N.          5           15            1           12           11
    4


       THE PILE COORDINATE SYSTEM (LOCAL AXES)
       ---------------------------------------

       * PILE TOP DISPLACEMENTS *

      PILE GROUP   DISP. x,IN   DISP. y,IN   DISP. z,IN   ROT. x,RAD   ROT. y,RAD
ROT. z,RAD
      **********  ***********  ***********  ***********  ***********  ***********
***********
          1            0.1089     0.028177   1.8187E-04  -2.6279E-05   1.4066E-04
2.3211E-04
          2            0.1216     0.030542   1.8187E-04  -2.6279E-05   1.4066E-04
2.3211E-04
          3            0.1342     0.032907   1.8187E-04  -2.6279E-05   1.4066E-04
2.3211E-04
          4            0.1469     0.035272   1.8187E-04  -2.6279E-05   1.4066E-04
2.3211E-04
          5            0.1596     0.037637   1.8187E-04  -2.6279E-05   1.4066E-04
2.3211E-04
          6          0.098145   1.3737E-05  -9.8912E-03  -2.8022E-06   2.3211E-04
-1.4307E-04
          7            0.1110   1.3737E-05    -0.010143  -2.8022E-06   2.3211E-04
-1.4307E-04
          8            0.1239   1.3737E-05    -0.010396  -2.8022E-06   2.3211E-04
```

```
-1.4307E-04
          9            0.1368   1.3737E-05    -0.010648  -2.8022E-06   2.3211E-04
-1.4307E-04
         10            0.1497   1.3737E-05    -0.010900  -2.8022E-06   2.3211E-04
-1.4307E-04
         11          0.084699  -4.0854E-03  -1.5439E-04   2.0751E-05   1.4158E-04
2.3211E-04
         12          0.097441  -5.9529E-03  -1.5439E-04   2.0751E-05   1.4158E-04
2.3211E-04
         13            0.1102  -7.8205E-03  -1.5439E-04   2.0751E-05   1.4158E-04
2.3211E-04
         14            0.1229  -9.6880E-03  -1.5439E-04   2.0751E-05   1.4158E-04
2.3211E-04
         15            0.1357    -0.011555  -1.5439E-04   2.0751E-05   1.4158E-04
2.3211E-04

       MINIMUM       0.084699    -0.011555    -0.010900  -2.6279E-05   1.4066E-04
-1.4307E-04
       Pile N.         11           15           10            1            1
    6
       MAXIMUM         0.1596     0.037637   1.8187E-04   2.0751E-05   2.3211E-04
2.3211E-04
       Pile N.          5            5            1           11            6
    1

       * PILE TOP REACTIONS *

      PILE GROUP   AXIAL,KIP    LAT. y,KIP   LAT. z,KIP MOM x,KIP-IN MOM y,KIP-IN
MOM z,KIP-IN
      **********  ***********  ***********  ***********  ***********  ***********
***********
          1            135.35       8.7468     0.036654       0.0000       0.0000
   0.0000
          2            149.77       9.1259     0.035242       0.0000       0.0000
-1.3179E-12
          3            164.18       9.4903     0.033980       0.0000       0.0000
-1.3179E-12
          4            178.60       9.8415     0.032840       0.0000       0.0000
1.3179E-12
          5            193.01       10.181     0.031805       0.0000       0.0000
   0.0000
          6            121.60   7.2445E-03      -3.2430       0.0000  -9.5776E-14
6.4349E-16
          7            135.35   7.1608E-03      -3.2845       0.0000  -9.5776E-14
6.4349E-16
          8            149.09   7.0799E-03      -3.3254       0.0000       0.0000
   0.0000
          9            162.83   7.0015E-03      -3.3656       0.0000  -9.5776E-14
   0.0000
         10            176.58   6.9256E-03      -3.4053       0.0000       0.0000
```

```
-6.4349E-16
         11            107.83      -2.4190    -0.059689       0.0000   1.4965E-15
   0.0000
         12            122.35      -2.9563    -0.049901       0.0000  -1.4965E-15
   0.0000
         13            136.86      -3.4194    -0.043805       0.0000   1.4965E-15
   0.0000
         14            151.38      -3.8327    -0.039536       0.0000   1.4965E-15
   0.0000
         15            165.89      -4.2097    -0.036328       0.0000  -1.4965E-15
   0.0000

       MINIMUM         107.83      -4.2097      -3.4053       0.0000  -9.5776E-14
-1.3179E-12
       Pile N.         11           15           10            1            6
    2
       MAXIMUM         193.01       10.181     0.036654       0.0000   1.4965E-15
1.3179E-12
       Pile N.          5            5            1            1           11
    4

      PILE GROUP   STRESS,KIP/IN**2
      **********  ****************
          1            4.7871
          2            5.2969
          3            5.8067
          4            6.3165
          5            6.8263
          6            4.3008
          7            4.7869
          8            5.2730
          9            5.7590
         10            6.2451
         11            3.8137
         12            4.3271
         13            4.8405
         14            5.3539
         15            5.8673

       MINIMUM         3.8137
       Pile N.         11
       MAXIMUM         6.8263
       Pile N.          5

       * EFFECTS FOR LATERALLY LOADED PILE *

       * MINIMUM VALUES AND LOCATIONS *

     PILE     DISPL.      DISPL.      MOMENT      MOMENT       SHEAR       SHEAR
SOIL REACT  SOIL REACT     TOTAL    FLEX. RIG.  FLEX. RIG.
```

```
                y-DIR       z-DIR       z-DIR       y-DIR       y-DIR       z-DIR
  y-DIR       z-DIR      STRESS       z-DIR       y-DIR
                IN          IN        KIP-IN      KIP-IN        KIP         KIP
 KIP/IN      KIP/IN     KIP/IN**2   KIP-IN**2   KIP-IN**2
    ******  **********  **********  **********  **********  **********  **********
**********  **********  **********  **********  **********
        1  -3.8542E-03 -2.5093E-05     -18.517   -0.042052     -2.1746 -9.5095E-03
-0.017061 -1.0808E-04      4.7871  3.1594E+07  9.1843E+06
     x(FT)      10.640      8.3600      19.000      15.200      6.0800      4.5600
   12.920      5.3200      0.0000      0.0000      0.0000
        2  -4.1335E-03 -2.5361E-05     -19.914   -0.041848     -2.2615 -9.1410E-03
-0.017613 -9.6776E-05      5.2969  3.1594E+07  9.1843E+06
     x(FT)      10.640      8.3600      19.000      15.200      6.0800      5.3200
   13.680      6.8400      63.840      0.0000      0.0000
        3  -4.4025E-03 -2.5584E-05     -21.248   -0.041548     -2.3438 -8.8760E-03
-0.018196 -9.1984E-05      5.8067  3.1594E+07  9.1843E+06
     x(FT)      10.640      8.3600      19.000      15.200      6.0800      5.3200
   13.680      7.6000      63.840      0.0000      0.0000
        4  -4.6614E-03 -2.5770E-05     -22.519   -0.041246     -2.4221 -8.6333E-03
-0.019224 -8.7846E-05      6.3165  3.1594E+07  9.1843E+06
     x(FT)      10.640      8.3600      19.000      15.960      6.0800      5.3200
   19.760      7.6000      64.600      0.0000      0.0000
        5  -4.9108E-03 -2.5926E-05     -23.898   -0.041282     -2.4984 -8.4102E-03
-0.021445 -8.4074E-05      6.8263  3.1594E+07  9.1843E+06
     x(FT)      10.640      8.3600      19.760      15.960      6.8400      5.3200
   20.520      7.6000      0.0000      0.0000      0.0000
        6  -2.2509E-06 -9.8912E-03   -0.017496     -51.153 -2.0040E-03     -2.9845
-3.3650E-05     -0.1261      4.3008  3.1594E+07  9.1843E+06
     x(FT)      8.3600      0.0000      15.200      2.2800      4.5600      0.0000
   15.200      0.7600      47.880      0.0000      0.0000
        7  -2.2404E-06   -0.010143   -0.017454     -52.047 -1.9792E-03     -3.0222
-3.4117E-05     -0.1270      4.7869  3.1594E+07  9.1843E+06
     x(FT)      8.3600      0.0000      15.200      2.2800      5.3200      0.0000
   15.200      0.7600      47.880      0.0000      0.0000
        8  -2.2296E-06   -0.010396   -0.017411     -52.934 -1.9566E-03     -3.0593
-3.4583E-05     -0.1280      5.2730  3.1594E+07  9.1843E+06
     x(FT)      8.3600      0.0000      15.200      2.2800      5.3200      0.0000
   15.200      0.7600      0.0000      0.0000      0.0000
        9  -2.2185E-06   -0.010648   -0.017365     -53.815 -1.9346E-03     -3.0959
-3.5048E-05     -0.1289      5.7590  3.1594E+07  9.1843E+06
     x(FT)      8.3600      0.0000      15.200      2.2800      5.3200      0.0000
   15.200      0.7600      47.880      0.0000      0.0000
       10  -2.2072E-06   -0.010900   -0.017317     -54.689 -1.9132E-03     -3.1319
-3.5515E-05     -0.1298      6.2451  3.1594E+07  9.1843E+06
     x(FT)      8.3600      0.0000      15.200      2.2800      5.3200      0.0000
   15.200      0.7600      0.0000      0.0000      0.0000
       11  -4.0854E-03 -1.5439E-04     -46.480     -0.8799     -2.2943   -0.054976
-0.076156 -2.6577E-03      3.8137  3.1594E+07  9.1843E+06
     x(FT)      0.0000      0.0000      3.0400      2.2800      0.0000      0.0000
   0.7600      0.7600      0.0000      0.0000      0.0000
```

```
       12  -5.9529E-03 -1.5439E-04     -60.136     -0.7736     -2.8010   -0.045874
-0.085897 -2.0462E-03      4.3271  3.1594E+07  9.1843E+06
     x(FT)      0.0000      0.0000      3.0400      2.2800      0.0000      0.0000
   1.5200      0.7600      0.0000      0.0000      0.0000
       13  -7.8205E-03 -1.5439E-04     -72.261     -0.7031     -3.2374   -0.040212
-0.095571 -1.6909E-03      4.8405  3.1594E+07  9.1843E+06
     x(FT)      0.0000      0.0000      3.0400      2.2800      0.0000      0.0000
   2.2800      0.7600      0.0000      0.0000      0.0000
       14  -9.6880E-03 -1.5439E-04     -83.319     -0.6515     -3.6266   -0.036252
  -0.1071 -1.4550E-03      5.3539  3.1594E+07  9.1843E+06
     x(FT)      0.0000      0.0000      3.0400      2.2800      0.0000      0.0000
   3.0400      0.7600      0.0000      0.0000      0.0000
       15    -0.011556 -1.5439E-04     -93.573     -0.6181     -3.9813   -0.033277
  -0.1174 -1.2853E-03      5.8673  3.1594E+07  9.1843E+06
     x(FT)      0.0000      0.0000      3.0400      3.0400      0.0000      0.0000
   3.0400      0.7600      0.0000      0.0000      0.0000

      Min.   -0.011556   -0.010900     -93.573     -54.689     -3.9813     -3.1319
  -0.1174     -0.1298      3.8137  3.1594E+07  9.1843E+06
   Pile N.      15          10          15          10          15          10
   15          10          11           1           1

      * MAXIMUM VALUES AND LOCATIONS *

     PILE     DISPL.      DISPL.      MOMENT      MOMENT       SHEAR       SHEAR
SOIL REACT  SOIL REACT     TOTAL    FLEX. RIG.  FLEX. RIG.
               y-DIR       z-DIR       z-DIR       y-DIR       y-DIR       z-DIR
  y-DIR       z-DIR      STRESS       z-DIR       y-DIR
               IN          IN        KIP-IN      KIP-IN        KIP         KIP
 KIP/IN      KIP/IN     KIP/IN**2   KIP-IN**2   KIP-IN**2
    ******  **********  **********  **********  **********  **********  **********
**********  **********  **********  **********  **********
        1     0.028177  1.8187E-04      203.99      0.6538      8.1802    0.032997
   0.2391  1.1659E-03      6.0417  3.1594E+07  9.1843E+06
     x(FT)      0.0000      0.0000      3.8000      3.0400      0.0000      0.0000
   3.0400      0.7600      3.8000      0.0000      0.0000
        2     0.030542  1.8187E-04      215.68      0.6383      8.5321    0.031707
   0.2488  1.1012E-03      6.6233  3.1594E+07  9.1843E+06
     x(FT)      0.0000      0.0000      3.8000      3.0400      0.0000      0.0000
   3.0400      0.7600      3.8000      0.0000      0.0000
        3     0.032907  1.8187E-04      227.03      0.6242      8.8702    0.030553
   0.2581  1.0445E-03      7.2030  3.1594E+07  9.1843E+06
     x(FT)      0.0000      0.0000      3.8000      3.0400      0.0000      0.0000
   3.0400      0.7600      3.8000      0.0000      0.0000
        4     0.035272  1.8187E-04      238.08      0.6113      9.1958    0.029511
   0.2669  9.9432E-04      7.7807  3.1594E+07  9.1843E+06
     x(FT)      0.0000      0.0000      3.8000      3.0400      0.0000      0.0000
   3.0400      0.7600      3.8000      0.0000      0.0000
        5     0.037637  1.8187E-04      248.86      0.5993      9.5101    0.028565
   0.2754  9.4955E-04      8.3568  3.1594E+07  9.1843E+06
```

```
     x(FT)      0.0000      0.0000      3.8000      3.0400      0.0000      0.0000
   3.0400      0.7600      3.8000      0.0000      0.0000
        6   1.3737E-05  1.4396E-03      0.1525      3.5675  6.8856E-03      0.8919
2.3486E-04    0.025239      5.3830  3.1594E+07  9.1843E+06
     x(FT)      0.0000      6.8400      3.8000      12.920      0.0000      3.8000
   2.2800      4.5600      2.2800      0.0000      0.0000
        7   1.3737E-05  1.4847E-03      0.1514      3.6708  6.8056E-03      0.9008
2.3192E-04    0.025173      5.8880  3.1594E+07  9.1843E+06
     x(FT)      0.0000      6.8400      3.8000      12.920      0.0000      3.8000
   2.2800      4.5600      2.2800      0.0000      0.0000
        8   1.3737E-05  1.5298E-03      0.1504      3.7736  6.7283E-03      0.9096
2.2909E-04    0.025098      6.3928  3.1594E+07  9.1843E+06
     x(FT)      0.0000      6.8400      3.8000      12.920      0.0000      3.8000
   2.2800      4.5600      2.2800      0.0000      0.0000
        9   1.3737E-05  1.5750E-03      0.1494      3.8758  6.6535E-03      0.9184
2.2637E-04    0.025015      6.8975  3.1594E+07  9.1843E+06
     x(FT)      0.0000      6.8400      3.8000      12.920      0.0000      3.8000
   2.2800      4.5600      2.2800      0.0000      0.0000
       10   1.3737E-05  1.6202E-03      0.1484      3.9774  6.5810E-03      0.9270
2.2375E-04    0.024925      7.4021  3.1594E+07  9.1843E+06
     x(FT)      0.0000      6.8400      3.8000      12.920      0.0000      3.8000
   2.2800      4.5600      2.2800      0.0000      0.0000
       11   6.1802E-04  1.6677E-05      3.2182    0.036212      0.6261    0.019792
5.9751E-03  7.4127E-04      4.1001  3.1594E+07  9.1843E+06
     x(FT)      8.3600      6.8400      15.960      12.920      5.3200      3.8000
   7.6000      4.5600      3.0400      0.0000      0.0000
       12   9.0995E-04  1.8272E-05      4.4998    0.036705      0.7693    0.015398
6.7779E-03  4.3495E-04      4.6973  3.1594E+07  9.1843E+06
     x(FT)      9.1200      6.8400      16.720      13.680      5.3200      3.8000
   9.1200      4.5600      3.0400      0.0000      0.0000
       13   1.1882E-03  1.9526E-05      5.7144    0.037107      0.8835    0.012631
7.4643E-03  2.5862E-04      5.2851  3.1594E+07  9.1843E+06
     x(FT)      9.1200      7.6000      17.480      13.680      5.3200      3.8000
   9.8800      4.5600      3.0400      0.0000      0.0000
       14   1.4522E-03  2.0369E-05      6.8793    0.037005      0.9787    0.011126
8.0774E-03  1.7726E-04      5.8665  3.1594E+07  9.1843E+06
     x(FT)      9.8800      7.6000      17.480      14.440      5.3200      4.5600
   10.640      5.3200      3.0400      0.0000      0.0000
       15   1.7118E-03  2.0923E-05      8.0761    0.036946      1.0676    0.010085
8.6391E-03  1.4672E-04      6.4429  3.1594E+07  9.1843E+06
     x(FT)      9.8800      7.6000      18.240      14.440      6.0800      4.5600
   11.400      5.3200      3.0400      0.0000      0.0000

      Max.    0.037637  1.6202E-03      248.86      3.9774      9.5101      0.9270
   0.2754    0.025239      8.3568  3.1594E+07  9.1843E+06
   Pile N.       5          10           5          10           5          10
    5           6           5           1           1
```

LOAD CASE : 7
CASE NAME : STR III-L1

LOAD TYPE : Dead, DL

REDUCTION FACTORS FOR CLOSELY-SPACED PILE GROUPS, COMBINED Y AND Z DIRECTIONS
ESTIMATED USING MOVEMENT IN THE DIRECTION OF PILE CAP DISPLACEMENTS

GROUP NO	P-FACTOR	Y-FACTOR
1	0.8637	1.0000
2	0.8637	1.0000
3	0.8637	1.0000
4	0.8931	1.0000
5	0.8974	1.0000
6	0.7666	1.0000
7	0.7666	1.0000
8	0.7666	1.0000
9	0.7996	1.0000
10	0.8044	1.0000
11	0.6762	1.0000
12	0.6762	1.0000
13	0.6762	1.0000
14	0.7133	1.0000
15	0.7187	1.0000

* TABLE L * COMPUTATION ON PILE CAP

* EQUIVALENT CONCENTRATED LOAD AT ORIGIN *

VERT. LOAD,KIPS	HOR. LOAD Y,KIPS	HOR. LOAD Z,KIPS
2183.55	29.1900	-44.5700

MOMENT X ,KIP-IN	MOMENT Y,KIP-IN	MOMENT Z,KIP-IN
0.00000	22034.8	4350.02

* DISPLACEMENT OF GROUPED PILE FOUNDATION AT ORIGIN *

VERTICAL ,IN	HORIZONTAL Y,IN	HORIZONTAL Z,IN
0.12039	8.91397E-03	-7.97310E-03

ANGLE ROT. X,RAD	ANGLE ROT. Y,RAD	ANGLE ROT. Z,RAD
4.11424E-07	8.28002E-05	1.29698E-04

```
     * PASSIVE RESISTANCE IN PILE CAP *

            HOR. LOAD Y,KIP    HOR. LOAD Z,KIP      POSITION, FT      EQ. DIAM, FT
                3.51310            2.18993           -1.55556            35.1141


       THE GLOBAL STRUCTURAL COORDINATE SYSTEM
       ---------------------------------------

       * PILE TOP DISPLACEMENTS *

      PILE GROUP   DISP. X,IN   DISP. Y,IN   DISP. Z,IN   ROT. X,RAD   ROT. Y,RAD
ROT. Z,RAD
      **********  ***********  ***********  ***********  ***********  ***********
***********
          1            0.1133   8.9880E-03  -7.9978E-03   4.1142E-07   8.2800E-05
1.2970E-04
          2            0.1207   8.9510E-03  -7.9978E-03   4.1142E-07   8.2800E-05
1.2970E-04
          3            0.1282   8.9140E-03  -7.9978E-03   4.1142E-07   8.2800E-05
1.2970E-04
          4            0.1356   8.8769E-03  -7.9978E-03   4.1142E-07   8.2800E-05
1.2970E-04
          5            0.1431   8.8399E-03  -7.9978E-03   4.1142E-07   8.2800E-05
1.2970E-04
          6            0.1055   8.9880E-03  -7.9731E-03   4.1142E-07   8.2800E-05
1.2970E-04
          7            0.1129   8.9510E-03  -7.9731E-03   4.1142E-07   8.2800E-05
1.2970E-04
          8            0.1204   8.9140E-03  -7.9731E-03   4.1142E-07   8.2800E-05
1.2970E-04
          9            0.1278   8.8769E-03  -7.9731E-03   4.1142E-07   8.2800E-05
1.2970E-04
         10            0.1353   8.8399E-03  -7.9731E-03   4.1142E-07   8.2800E-05
1.2970E-04
         11          0.097700   8.9880E-03  -7.9484E-03   4.1142E-07   8.2800E-05
1.2970E-04
         12            0.1051   8.9510E-03  -7.9484E-03   4.1142E-07   8.2800E-05
1.2970E-04
         13            0.1126   8.9140E-03  -7.9484E-03   4.1142E-07   8.2800E-05
1.2970E-04
         14            0.1201   8.8769E-03  -7.9484E-03   4.1142E-07   8.2800E-05
1.2970E-04
         15            0.1275   8.8399E-03  -7.9484E-03   4.1142E-07   8.2800E-05
1.2970E-04

       MINIMUM       0.097700   8.8399E-03  -7.9978E-03   4.1142E-07   8.2800E-05
1.2970E-04
       Pile N.          11            5            1            1            1
```

```
    1
       MAXIMUM         0.1431   8.9880E-03  -7.9484E-03   4.1142E-07   8.2800E-05
1.2970E-04
       Pile N.          5            1           11            1            1
    1

       * PILE TOP REACTIONS *

      PILE GROUP   FOR. X,KIP   FOR. Y,KIP   FOR. Z,KIP MOM X,KIP-IN MOM Y,KIP-IN
MOM Z,KIP-IN
      **********  ***********  ***********  ***********  ***********  ***********
***********
          1            136.40      -14.074      -1.6147  -1.5742E-14  -9.4474E-14
   0.0000
          2            144.70      -15.254      -1.5833       0.0000       0.0000
   0.0000
          3            152.99      -16.439      -1.5535       0.0000       0.0000
   0.0000
          4            161.32      -17.426      -1.5600  -1.5742E-14  -9.4474E-14
   0.0000
          5            169.62      -18.585      -1.5375   1.5742E-14   9.4474E-14
   0.0000
          6            129.43       2.6235      -3.4933       0.0000  -3.2947E-13
2.0174E-29
          7            137.39       2.6135      -3.4952   5.8646E-30  -5.8646E-30
-9.5776E-14
          8            145.34       2.6035      -3.4971   5.8646E-30  -5.8646E-30
-9.5776E-14
          9            153.30       2.6690      -3.6007       0.0000   3.2947E-13
-2.0174E-29
         10            161.25       2.6696      -3.6174       0.0000       0.0000
   0.0000
         11            121.67       17.021      -2.2570  -1.5742E-14   9.4474E-14
   0.0000
         12            129.98       18.022      -2.1561       0.0000       0.0000
   0.0000
         13            138.29       19.056      -2.0633       0.0000       0.0000
   0.0000
         14            146.62       19.969      -2.0497  -1.5742E-14   9.4474E-14
   0.0000
         15            154.93       21.017      -1.9799       0.0000       0.0000
   0.0000

       MINIMUM         121.67      -18.585      -3.6174  -1.5742E-14  -3.2947E-13
-9.5776E-14
       Pile N.         11            5           10            1            6
    7
       MAXIMUM         169.62       21.017      -1.5375   1.5742E-14   3.2947E-13
2.0174E-29
       Pile N.          5           15            5            5            9
```

6

THE PILE COORDINATE SYSTEM (LOCAL AXES)
---

* PILE TOP DISPLACEMENTS *

PILE GROUP	DISP. x,IN	DISP. y,IN	DISP. z,IN	ROT. x,RAD	ROT. y,RAD	ROT. z,RAD
**********	**********	**********	**********	**********	**********	**********
1	0.1103	0.027482	-7.9978E-03	-1.3203E-05	8.1742E-05	1.2970E-04
2	0.1176	0.028670	-7.9978E-03	-1.3203E-05	8.1742E-05	1.2970E-04
3	0.1250	0.029858	-7.9978E-03	-1.3203E-05	8.1742E-05	1.2970E-04
4	0.1323	0.031047	-7.9978E-03	-1.3203E-05	8.1742E-05	1.2970E-04
5	0.1397	0.032235	-7.9978E-03	-1.3203E-05	8.1742E-05	1.2970E-04
6	0.1055	-7.9731E-03	-8.9880E-03	4.1142E-07	1.2970E-04	-8.2800E-05
7	0.1129	-7.9731E-03	-8.9510E-03	4.1142E-07	1.2970E-04	-8.2800E-05
8	0.1204	-7.9731E-03	-8.9140E-03	4.1142E-07	1.2970E-04	-8.2800E-05
9	0.1278	-7.9731E-03	-8.8769E-03	4.1142E-07	1.2970E-04	-8.2800E-05
10	0.1353	-7.9731E-03	-8.8399E-03	4.1142E-07	1.2970E-04	-8.2800E-05
11	0.097848	-7.1920E-03	-7.9484E-03	1.4015E-05	8.1607E-05	1.2970E-04
12	0.1052	-8.4533E-03	-7.9484E-03	1.4015E-05	8.1607E-05	1.2970E-04
13	0.1125	-9.7147E-03	-7.9484E-03	1.4015E-05	8.1607E-05	1.2970E-04
14	0.1199	-0.010976	-7.9484E-03	1.4015E-05	8.1607E-05	1.2970E-04
15	0.1272	-0.012237	-7.9484E-03	1.4015E-05	8.1607E-05	1.2970E-04
MINIMUM	0.097848	-0.012237	-8.9880E-03	-1.3203E-05	8.1607E-05	-8.2800E-05
Pile N.	11	15	6	1	11	6
MAXIMUM	0.1397	0.032235	-7.9484E-03	1.4015E-05	1.2970E-04	1.2970E-04
Pile N.	5	5	11	11	6	

```
    1

       * PILE TOP REACTIONS *

      PILE GROUP   AXIAL,KIP    LAT. y,KIP   LAT. z,KIP MOM x,KIP-IN MOM y,KIP-IN
MOM z,KIP-IN
      **********  ***********  ***********  ***********  ***********  ***********
***********
          1            136.86       8.5362      -1.6147       0.0000  -9.5776E-14
   0.0000
          2            145.24       8.7356      -1.5833       0.0000       0.0000
   0.0000
          3            153.61       8.9305      -1.5535       0.0000       0.0000
   0.0000
          4            161.99       9.3248      -1.5600       0.0000  -9.5776E-14
   0.0000
          5            170.37       9.5460      -1.5375       0.0000   9.5776E-14
   0.0000
          6            129.43      -3.4933      -2.6235       0.0000       0.0000
3.2947E-13
          7            137.39      -3.4952      -2.6135       0.0000  -9.5776E-14
   0.0000
          8            145.34      -3.4971      -2.6035       0.0000  -9.5776E-14
   0.0000
          9            153.30      -3.6007      -2.6690       0.0000       0.0000
-3.2947E-13
         10            161.25      -3.6174      -2.6696       0.0000       0.0000
   0.0000
         11            122.81      -3.2079      -2.2570       0.0000   9.5776E-14
   0.0000
         12            131.18      -3.5866      -2.1561       0.0000       0.0000
   0.0000
         13            139.54      -3.9322      -2.0633       0.0000       0.0000
   0.0000
         14            147.91      -4.4016      -2.0497       0.0000   9.5776E-14
   0.0000
         15            156.28      -4.7326      -1.9799       0.0000       0.0000
   0.0000

       MINIMUM         122.81      -4.7326      -2.6696       0.0000  -9.5776E-14
-3.2947E-13
       Pile N.         11           15           10            1            1
    9
       MAXIMUM         170.37       9.5460      -1.5375       0.0000   9.5776E-14
3.2947E-13
       Pile N.          5            5            5            1            5
    6

      PILE GROUP   STRESS,KIP/IN**2
      **********  ***************
```

```
          1            4.8404
          2            5.1367
          3            5.4329
          4            5.7292
          5            6.0254
          6            4.5778
          7            4.8591
          8            5.1404
          9            5.4217
         10            5.7030
         11            4.3435
         12            4.6394
         13            4.9353
         14            5.2313
         15            5.5272

       MINIMUM         4.3435
       Pile N.         11
       MAXIMUM         6.0254
       Pile N.          5

       * EFFECTS FOR LATERALLY LOADED PILE *

       * MINIMUM VALUES AND LOCATIONS *

     PILE     DISPL.      DISPL.      MOMENT      MOMENT       SHEAR       SHEAR
SOIL REACT  SOIL REACT     TOTAL    FLEX. RIG.  FLEX. RIG.
               y-DIR       z-DIR       z-DIR       y-DIR       y-DIR       z-DIR
  y-DIR       z-DIR      STRESS       z-DIR       y-DIR
                IN          IN        KIP-IN      KIP-IN        KIP         KIP
 KIP/IN      KIP/IN     KIP/IN**2   KIP-IN**2   KIP-IN**2
    ******  **********  **********  **********  **********  **********  **********
**********  **********  **********  **********  **********
        1  -3.6426E-03 -7.9978E-03     -17.466     -28.869     -2.0714     -1.4543
-0.016513   -0.051127      4.8404  3.1594E+07  9.1843E+06
     x(FT)      10.640      0.0000      19.000      3.0400      6.0800      0.0000
   12.920      0.7600      63.080      0.0000      0.0000
        2  -3.7832E-03 -7.9978E-03     -18.168     -28.521     -2.1181     -1.4254
-0.016809   -0.049714      5.1367  3.1594E+07  9.1843E+06
     x(FT)      10.640      0.0000      19.000      3.0400      6.0800      0.0000
   12.920      0.7600      0.0000      0.0000      0.0000
        3  -3.9217E-03 -7.9978E-03     -18.857     -28.188     -2.1636     -1.3981
-0.017129   -0.048388      5.4329  3.1594E+07  9.1843E+06
     x(FT)      10.640      0.0000      19.000      3.0400      6.0800      0.0000
   13.680      0.7600      0.0000      0.0000      0.0000
        4  -4.0885E-03 -7.9978E-03     -19.668     -28.257     -2.2650     -1.4018
-0.017931   -0.048653      5.7292  3.1594E+07  9.1843E+06
     x(FT)      10.640      0.0000      19.000      3.0400      6.0800      0.0000
   13.680      0.7600      63.840      0.0000      0.0000
        5  -4.2304E-03 -7.9978E-03     -20.371     -28.005     -2.3181     -1.3808
```

```
-0.018319   -0.047655      6.0254  3.1594E+07  9.1843E+06
     x(FT)      10.640      0.0000      19.000      3.0400      6.0800      0.0000
   13.680      0.7600      63.840      0.0000      0.0000
        6  -7.9731E-03 -8.9880E-03     -68.318     -40.737     -3.2891     -2.3933
  -0.1160     -0.1036      4.5778  3.1594E+07  9.1843E+06
     x(FT)      0.0000      0.0000      3.0400      2.2800      0.0000      0.0000
   2.2800      0.7600      58.520      0.0000      0.0000
        7  -7.9731E-03 -8.9510E-03     -68.358     -40.599     -3.2908     -2.3841
  -0.1161     -0.1033      4.8591  3.1594E+07  9.1843E+06
     x(FT)      0.0000      0.0000      3.0400      2.2800      0.0000      0.0000
   2.2800      0.7600      58.520      0.0000      0.0000
        8  -7.9731E-03 -8.9140E-03     -68.397     -40.462     -3.2925     -2.3748
  -0.1161     -0.1031      5.1404  3.1594E+07  9.1843E+06
     x(FT)      0.0000      0.0000      3.0400      2.2800      0.0000      0.0000
   2.2800      0.7600      58.520      0.0000      0.0000
        9  -7.9731E-03 -8.8769E-03     -69.846     -41.161     -3.3872     -2.4312
  -0.1200     -0.1069      5.4217  3.1594E+07  9.1843E+06
     x(FT)      0.0000      0.0000      3.0400      2.2800      0.0000      0.0000
   2.2800      0.7600      58.520      0.0000      0.0000
       10  -7.9731E-03 -8.8399E-03     -70.087     -41.139     -3.4023     -2.4311
  -0.1206     -0.1072      5.7030  3.1594E+07  9.1843E+06
     x(FT)      0.0000      0.0000      3.0400      2.2800      0.0000      0.0000
   2.2800      0.7600      0.0000      0.0000      0.0000
       11  -7.1920E-03 -7.9484E-03     -68.954     -36.885     -3.0374     -2.0687
  -0.1025   -0.082650      4.3435  3.1594E+07  9.1843E+06
     x(FT)      0.0000      0.0000      3.0400      2.2800      0.0000      0.0000
   3.0400      0.7600      59.280      0.0000      0.0000
       12  -8.4533E-03 -7.9484E-03     -77.642     -35.511     -3.3929     -1.9739
  -0.1123   -0.077852      4.6394  3.1594E+07  9.1843E+06
     x(FT)      0.0000      0.0000      3.0400      2.2800      0.0000      0.0000
   3.0400      0.7600      0.0000      0.0000      0.0000
       13  -9.7147E-03 -7.9484E-03     -85.791     -34.260     -3.7168     -1.8870
  -0.1212   -0.073408      4.9353  3.1594E+07  9.1843E+06
     x(FT)      0.0000      0.0000      3.0400      2.2800      0.0000      0.0000
   3.0400      0.7600      0.0000      0.0000      0.0000
       14    -0.010976 -7.9484E-03     -95.901     -33.970     -4.1529     -1.8696
  -0.1336   -0.072911      5.2313  3.1594E+07  9.1843E+06
     x(FT)      0.0000      0.0000      3.0400      2.2800      0.0000      0.0000
   3.0400      0.7600      60.800      0.0000      0.0000
       15    -0.012237 -7.9484E-03     -103.83     -33.208     -4.4617     -1.8040
  -0.1421   -0.069530      5.5272  3.1594E+07  9.1843E+06
     x(FT)      0.0000      0.0000      3.0400      3.0400      0.0000      0.0000
   3.0400      0.7600      0.0000      0.0000      0.0000

      Min.   -0.012237 -8.9880E-03     -103.83     -41.161     -4.4617     -2.4312
  -0.1421     -0.1072      4.3435  3.1594E+07  9.1843E+06
   Pile N.      15           6          15           9          15           9
   15          10          11           1           1

       * MAXIMUM VALUES AND LOCATIONS *
```

```
     PILE     DISPL.      DISPL.      MOMENT      MOMENT       SHEAR       SHEAR
SOIL REACT  SOIL REACT     TOTAL    FLEX. RIG.  FLEX. RIG.
               y-DIR       z-DIR       z-DIR       y-DIR       y-DIR       z-DIR
  y-DIR       z-DIR      STRESS       z-DIR       y-DIR
               IN          IN        KIP-IN      KIP-IN        KIP         KIP
 KIP/IN      KIP/IN     KIP/IN**2   KIP-IN**2   KIP-IN**2
    ******  **********  **********  **********  **********  **********  **********
**********  **********  **********  **********  **********
        1     0.027482  1.1223E-03      197.74      1.8866      7.9849      0.4145
   0.2401  4.4874E-03      6.1864  3.1594E+07  9.1843E+06
     x(FT)      0.0000      8.3600      3.8000      15.200      0.0000      4.5600
   3.0400      7.6000      3.0400      0.0000      0.0000
        2     0.028670  1.1265E-03      203.75      1.8798      8.1698      0.4051
   0.2451  4.3725E-03      6.5096  3.1594E+07  9.1843E+06
     x(FT)      0.0000      8.3600      3.8000      15.200      0.0000      4.5600
   3.0400      7.6000      3.0400      0.0000      0.0000
        3     0.029858  1.1304E-03      209.67      1.8722      8.3505      0.3988
   0.2499  4.2635E-03      6.8343  3.1594E+07  9.1843E+06
     x(FT)      0.0000      8.3600      3.8000      15.200      0.0000      5.3200
   3.0400      7.6000      3.8000      0.0000      0.0000
        4     0.031047  1.1284E-03      218.69      1.8740      8.7106      0.4009
   0.2604  4.2989E-03      7.1821  3.1594E+07  9.1843E+06
     x(FT)      0.0000      8.3600      3.8000      15.200      0.0000      5.3200
   3.0400      7.6000      3.8000      0.0000      0.0000
        5     0.032235  1.1314E-03      225.02      1.8682      8.9146      0.3966
   0.2660  4.2186E-03      7.5132  3.1594E+07  9.1843E+06
     x(FT)      0.0000      8.3600      3.8000      15.200      0.0000      5.3200
   3.0400      7.6000      3.8000      0.0000      0.0000
        6   9.5255E-04  1.1309E-03      5.0793      2.3777      0.8012      0.6395
7.7184E-03  8.0277E-03      5.5279  3.1594E+07  9.1843E+06
     x(FT)      9.8800      7.6000      16.720      13.680      6.0800      4.5600
   11.400      4.5600      2.2800      0.0000      0.0000
        7   9.5344E-04  1.1269E-03      5.0839      2.3695      0.8021      0.6379
7.7265E-03  8.0674E-03      5.8067  3.1594E+07  9.1843E+06
     x(FT)      9.8800      7.6000      16.720      13.680      6.0800      4.5600
   11.400      4.5600      2.2800      0.0000      0.0000
        8   9.5432E-04  1.1228E-03      5.0886      2.3613      0.8030      0.6364
7.7346E-03  8.1065E-03      6.0855  3.1594E+07  9.1843E+06
     x(FT)      9.8800      7.6000      16.720      13.680      6.0800      4.5600
   11.400      4.5600      2.2800      0.0000      0.0000
        9   9.6505E-04  1.1098E-03      5.1807      2.3636      0.8286      0.6539
8.0276E-03  9.4852E-03      6.3843  3.1594E+07  9.1843E+06
     x(FT)      9.1200      7.6000      16.720      12.920      5.3200      4.5600
   11.400      4.5600      2.2800      0.0000      0.0000
       10   9.6737E-04  1.1043E-03      5.1967      2.3603      0.8334      0.6550
8.0761E-03  9.7145E-03      6.6659  3.1594E+07  9.1843E+06
     x(FT)      9.1200      7.6000      16.720      12.920      5.3200      4.5600
   11.400      4.5600      2.2800      0.0000      0.0000
       11   1.0769E-03  1.1652E-03      5.4015      2.3342      0.8034      0.6404
```

```
7.3106E-03    0.013920      5.2214  3.1594E+07  9.1843E+06
     x(FT)      9.1200      7.6000      16.720      13.680      5.3200      3.8000
   11.400      4.5600      3.0400      0.0000      0.0000
       12   1.2386E-03  1.1616E-03      6.0918      2.2552      0.8907      0.5951
7.9448E-03    0.011532      5.5246  3.1594E+07  9.1843E+06
     x(FT)      9.1200      7.6000      17.480      13.680      5.3200      3.8000
   11.400      4.5600      3.0400      0.0000      0.0000
       13   1.3967E-03  1.1586E-03      6.8364      2.1781      0.9693      0.5591
8.4933E-03  9.3610E-03      5.8312  3.1594E+07  9.1843E+06
     x(FT)      9.8800      7.6000      17.480      13.680      5.3200      4.5600
   11.400      4.5600      3.0400      0.0000      0.0000
       14   1.5719E-03  1.1452E-03      7.6631      2.1335      1.0840      0.5551
9.4245E-03  8.8245E-03      6.1609  3.1594E+07  9.1843E+06
     x(FT)      9.8800      7.6000      17.480      13.680      5.3200      4.5600
   11.400      4.5600      3.0400      0.0000      0.0000
       15   1.7385E-03  1.1427E-03      8.3743      2.0886      1.1598      0.5350
9.9566E-03  7.1836E-03      6.4765  3.1594E+07  9.1843E+06
     x(FT)      9.8800      7.6000      17.480      14.440      5.3200      4.5600
   11.400      4.5600      3.0400      0.0000      0.0000

      Max.    0.032235  1.1652E-03      225.02      2.3777      8.9146      0.6550
   0.2660    0.013920      7.5132  3.1594E+07  9.1843E+06
   Pile N.       5          11           5           6           5          10
    5          11           5           1           1


     LOAD CASE :     8
     CASE NAME : STR III-L2

     LOAD TYPE : Dead, DL

       REDUCTION FACTORS FOR CLOSELY-SPACED PILE GROUPS, COMBINED Y AND Z DIRECTIONS
       ESTIMATED USING MOVEMENT IN THE DIRECTION OF PILE CAP DISPLACEMENTS

            GROUP NO     P-FACTOR     Y-FACTOR

                1          0.8637       1.0000
                2          0.8637       1.0000
                3          0.8637       1.0000
                4          0.8931       1.0000
                5          0.8974       1.0000
                6          0.7666       1.0000
                7          0.7666       1.0000
                8          0.7666       1.0000
                9          0.7996       1.0000
               10          0.8044       1.0000
               11          0.6762       1.0000
               12          0.6762       1.0000
               13          0.6762       1.0000
```

```
          14          0.7133       1.0000
          15          0.7187       1.0000


     * TABLE L *   COMPUTATION ON PILE CAP


     * EQUIVALENT CONCENTRATED LOAD AT ORIGIN *


          VERT. LOAD,KIPS    HOR. LOAD Y,KIPS   HOR. LOAD Z,KIPS
                2183.55            29.1900           -44.5700

         MOMENT X ,KIP-IN    MOMENT Y,KIP-IN    MOMENT Z,KIP-IN
                0.00000            22034.8            4350.02


     * DISPLACEMENT OF GROUPED PILE FOUNDATION AT ORIGIN *


           VERTICAL ,IN      HORIZONTAL Y,IN     HORIZONTAL Z,IN
                0.12039        8.91397E-03       -7.97310E-03

         ANGLE ROT. X,RAD    ANGLE ROT. Y,RAD    ANGLE ROT. Z,RAD
            4.11424E-07        8.28002E-05        1.29698E-04


     * PASSIVE RESISTANCE IN PILE CAP *

            HOR. LOAD Y,KIP    HOR. LOAD Z,KIP      POSITION, FT      EQ. DIAM, FT
                3.51310            2.18993           -1.55556           35.1141


       THE GLOBAL STRUCTURAL COORDINATE SYSTEM
       ---------------------------------------

       * PILE TOP DISPLACEMENTS *

      PILE GROUP   DISP. X,IN   DISP. Y,IN   DISP. Z,IN   ROT. X,RAD   ROT. Y,RAD
ROT. Z,RAD
      **********  ***********  ***********  ***********  ***********  ***********
***********
          1            0.1133   8.9880E-03  -7.9978E-03   4.1142E-07   8.2800E-05
1.2970E-04
          2            0.1207   8.9510E-03  -7.9978E-03   4.1142E-07   8.2800E-05
1.2970E-04
          3            0.1282   8.9140E-03  -7.9978E-03   4.1142E-07   8.2800E-05
1.2970E-04
          4            0.1356   8.8769E-03  -7.9978E-03   4.1142E-07   8.2800E-05
```

```
1.2970E-04
          5            0.1431   8.8399E-03  -7.9978E-03   4.1142E-07   8.2800E-05
1.2970E-04
          6            0.1055   8.9880E-03  -7.9731E-03   4.1142E-07   8.2800E-05
1.2970E-04
          7            0.1129   8.9510E-03  -7.9731E-03   4.1142E-07   8.2800E-05
1.2970E-04
          8            0.1204   8.9140E-03  -7.9731E-03   4.1142E-07   8.2800E-05
1.2970E-04
          9            0.1278   8.8769E-03  -7.9731E-03   4.1142E-07   8.2800E-05
1.2970E-04
         10            0.1353   8.8399E-03  -7.9731E-03   4.1142E-07   8.2800E-05
1.2970E-04
         11          0.097700   8.9880E-03  -7.9484E-03   4.1142E-07   8.2800E-05
1.2970E-04
         12            0.1051   8.9510E-03  -7.9484E-03   4.1142E-07   8.2800E-05
1.2970E-04
         13            0.1126   8.9140E-03  -7.9484E-03   4.1142E-07   8.2800E-05
1.2970E-04
         14            0.1201   8.8769E-03  -7.9484E-03   4.1142E-07   8.2800E-05
1.2970E-04
         15            0.1275   8.8399E-03  -7.9484E-03   4.1142E-07   8.2800E-05
1.2970E-04

       MINIMUM       0.097700   8.8399E-03  -7.9978E-03   4.1142E-07   8.2800E-05
1.2970E-04
       Pile N.         11            5            1            1            1
    1
       MAXIMUM         0.1431   8.9880E-03  -7.9484E-03   4.1142E-07   8.2800E-05
1.2970E-04
       Pile N.          5            1           11            1            1
    1

       * PILE TOP REACTIONS *

      PILE GROUP   FOR. X,KIP   FOR. Y,KIP   FOR. Z,KIP MOM X,KIP-IN MOM Y,KIP-IN
MOM Z,KIP-IN
      **********  ***********  ***********  ***********  ***********  ***********
***********
          1            136.40      -14.074      -1.6147  -1.5742E-14  -9.4474E-14
   0.0000
          2            144.70      -15.254      -1.5833       0.0000       0.0000
   0.0000
          3            152.99      -16.439      -1.5535       0.0000       0.0000
   0.0000
          4            161.32      -17.426      -1.5600  -1.5742E-14  -9.4474E-14
   0.0000
          5            169.62      -18.585      -1.5375   1.5742E-14   9.4474E-14
   0.0000
          6            129.43       2.6235      -3.4933       0.0000  -3.2947E-13
```

```
2.0174E-29
          7            137.39       2.6135      -3.4952   5.8646E-30  -5.8646E-30
-9.5776E-14
          8            145.34       2.6035      -3.4971   5.8646E-30  -5.8646E-30
-9.5776E-14
          9            153.30       2.6690      -3.6007       0.0000   3.2947E-13
-2.0174E-29
         10            161.25       2.6696      -3.6174       0.0000       0.0000
   0.0000
         11            121.67       17.021      -2.2570  -1.5742E-14   9.4474E-14
   0.0000
         12            129.98       18.022      -2.1561       0.0000       0.0000
   0.0000
         13            138.29       19.056      -2.0633       0.0000       0.0000
   0.0000
         14            146.62       19.969      -2.0497  -1.5742E-14   9.4474E-14
   0.0000
         15            154.93       21.017      -1.9799       0.0000       0.0000
   0.0000

       MINIMUM         121.67      -18.585      -3.6174  -1.5742E-14  -3.2947E-13
-9.5776E-14
       Pile N.         11            5           10            1            6
    7
       MAXIMUM         169.62       21.017      -1.5375   1.5742E-14   3.2947E-13
2.0174E-29
       Pile N.          5           15            5            5            9
    6


       THE PILE COORDINATE SYSTEM (LOCAL AXES)
       ---------------------------------------

       * PILE TOP DISPLACEMENTS *

      PILE GROUP   DISP. x,IN   DISP. y,IN   DISP. z,IN   ROT. x,RAD   ROT. y,RAD
ROT. z,RAD
      **********  ***********  ***********  ***********  ***********  ***********
***********
          1            0.1103     0.027482  -7.9978E-03  -1.3203E-05   8.1742E-05
1.2970E-04
          2            0.1176     0.028670  -7.9978E-03  -1.3203E-05   8.1742E-05
1.2970E-04
          3            0.1250     0.029858  -7.9978E-03  -1.3203E-05   8.1742E-05
1.2970E-04
          4            0.1323     0.031047  -7.9978E-03  -1.3203E-05   8.1742E-05
1.2970E-04
          5            0.1397     0.032235  -7.9978E-03  -1.3203E-05   8.1742E-05
1.2970E-04
          6            0.1055  -7.9731E-03  -8.9880E-03   4.1142E-07   1.2970E-04
```

```
-8.2800E-05
          7            0.1129  -7.9731E-03  -8.9510E-03   4.1142E-07   1.2970E-04
-8.2800E-05
          8            0.1204  -7.9731E-03  -8.9140E-03   4.1142E-07   1.2970E-04
-8.2800E-05
          9            0.1278  -7.9731E-03  -8.8769E-03   4.1142E-07   1.2970E-04
-8.2800E-05
         10            0.1353  -7.9731E-03  -8.8399E-03   4.1142E-07   1.2970E-04
-8.2800E-05
         11          0.097848  -7.1920E-03  -7.9484E-03   1.4015E-05   8.1607E-05
1.2970E-04
         12            0.1052  -8.4533E-03  -7.9484E-03   1.4015E-05   8.1607E-05
1.2970E-04
         13            0.1125  -9.7147E-03  -7.9484E-03   1.4015E-05   8.1607E-05
1.2970E-04
         14            0.1199    -0.010976  -7.9484E-03   1.4015E-05   8.1607E-05
1.2970E-04
         15            0.1272    -0.012237  -7.9484E-03   1.4015E-05   8.1607E-05
1.2970E-04

       MINIMUM       0.097848    -0.012237  -8.9880E-03  -1.3203E-05   8.1607E-05
-8.2800E-05
       Pile N.         11           15            6            1           11
    6
       MAXIMUM         0.1397     0.032235  -7.9484E-03   1.4015E-05   1.2970E-04
1.2970E-04
       Pile N.          5            5           11           11            6
    1

       * PILE TOP REACTIONS *

      PILE GROUP   AXIAL,KIP    LAT. y,KIP   LAT. z,KIP MOM x,KIP-IN MOM y,KIP-IN
MOM z,KIP-IN
      **********  ***********  ***********  ***********  ***********  ***********
***********
          1            136.86       8.5362      -1.6147       0.0000  -9.5776E-14
   0.0000
          2            145.24       8.7356      -1.5833       0.0000       0.0000
   0.0000
          3            153.61       8.9305      -1.5535       0.0000       0.0000
   0.0000
          4            161.99       9.3248      -1.5600       0.0000  -9.5776E-14
   0.0000
          5            170.37       9.5460      -1.5375       0.0000   9.5776E-14
   0.0000
          6            129.43      -3.4933      -2.6235       0.0000       0.0000
3.2947E-13
          7            137.39      -3.4952      -2.6135       0.0000  -9.5776E-14
   0.0000
          8            145.34      -3.4971      -2.6035       0.0000  -9.5776E-14
```

```
   0.0000
          9            153.30      -3.6007      -2.6690       0.0000       0.0000
-3.2947E-13
         10            161.25      -3.6174      -2.6696       0.0000       0.0000
   0.0000
         11            122.81      -3.2079      -2.2570       0.0000   9.5776E-14
   0.0000
         12            131.18      -3.5866      -2.1561       0.0000       0.0000
   0.0000
         13            139.54      -3.9322      -2.0633       0.0000       0.0000
   0.0000
         14            147.91      -4.4016      -2.0497       0.0000   9.5776E-14
   0.0000
         15            156.28      -4.7326      -1.9799       0.0000       0.0000
   0.0000

       MINIMUM         122.81      -4.7326      -2.6696       0.0000  -9.5776E-14
-3.2947E-13
       Pile N.         11           15           10            1            1
    9
       MAXIMUM         170.37       9.5460      -1.5375       0.0000   9.5776E-14
3.2947E-13
       Pile N.          5            5            5            1            5
    6

      PILE GROUP   STRESS,KIP/IN**2
      **********  ****************
          1            4.8404
          2            5.1367
          3            5.4329
          4            5.7292
          5            6.0254
          6            4.5778
          7            4.8591
          8            5.1404
          9            5.4217
         10            5.7030
         11            4.3435
         12            4.6394
         13            4.9353
         14            5.2313
         15            5.5272

      MINIMUM         4.3435
      Pile N.         11
      MAXIMUM         6.0254
      Pile N.          5

      * EFFECTS FOR LATERALLY LOADED PILE *
```

```
      * MINIMUM VALUES AND LOCATIONS *

     PILE     DISPL.      DISPL.      MOMENT      MOMENT       SHEAR       SHEAR
SOIL REACT  SOIL REACT     TOTAL    FLEX. RIG.  FLEX. RIG.
               y-DIR       z-DIR       z-DIR       y-DIR       y-DIR       z-DIR
  y-DIR       z-DIR      STRESS       z-DIR       y-DIR
               IN          IN        KIP-IN      KIP-IN        KIP         KIP
 KIP/IN      KIP/IN     KIP/IN**2   KIP-IN**2   KIP-IN**2
    ******  **********  **********  **********  **********  **********  **********
**********  **********  **********  **********  **********
        1  -3.6426E-03 -7.9978E-03     -17.466     -28.869     -2.0714     -1.4543
-0.016513   -0.051127      4.8404  3.1594E+07  9.1843E+06
     x(FT)      10.640      0.0000      19.000      3.0400      6.0800      0.0000
   12.920      0.7600      63.080      0.0000      0.0000
        2  -3.7832E-03 -7.9978E-03     -18.168     -28.521     -2.1181     -1.4254
-0.016809   -0.049714      5.1367  3.1594E+07  9.1843E+06
     x(FT)      10.640      0.0000      19.000      3.0400      6.0800      0.0000
   12.920      0.7600      0.0000      0.0000      0.0000
        3  -3.9217E-03 -7.9978E-03     -18.857     -28.188     -2.1636     -1.3981
-0.017129   -0.048388      5.4329  3.1594E+07  9.1843E+06
     x(FT)      10.640      0.0000      19.000      3.0400      6.0800      0.0000
   13.680      0.7600      0.0000      0.0000      0.0000
        4  -4.0885E-03 -7.9978E-03     -19.668     -28.257     -2.2650     -1.4018
-0.017931   -0.048653      5.7292  3.1594E+07  9.1843E+06
     x(FT)      10.640      0.0000      19.000      3.0400      6.0800      0.0000
   13.680      0.7600      63.840      0.0000      0.0000
        5  -4.2304E-03 -7.9978E-03     -20.371     -28.005     -2.3181     -1.3808
-0.018319   -0.047655      6.0254  3.1594E+07  9.1843E+06
     x(FT)      10.640      0.0000      19.000      3.0400      6.0800      0.0000
   13.680      0.7600      63.840      0.0000      0.0000
        6  -7.9731E-03 -8.9880E-03     -68.318     -40.737     -3.2891     -2.3933
  -0.1160     -0.1036      4.5778  3.1594E+07  9.1843E+06
     x(FT)      0.0000      0.0000      3.0400      2.2800      0.0000      0.0000
   2.2800      0.7600      58.520      0.0000      0.0000
        7  -7.9731E-03 -8.9510E-03     -68.358     -40.599     -3.2908     -2.3841
  -0.1161     -0.1033      4.8591  3.1594E+07  9.1843E+06
     x(FT)      0.0000      0.0000      3.0400      2.2800      0.0000      0.0000
   2.2800      0.7600      58.520      0.0000      0.0000
        8  -7.9731E-03 -8.9140E-03     -68.397     -40.462     -3.2925     -2.3748
  -0.1161     -0.1031      5.1404  3.1594E+07  9.1843E+06
     x(FT)      0.0000      0.0000      3.0400      2.2800      0.0000      0.0000
   2.2800      0.7600      58.520      0.0000      0.0000
        9  -7.9731E-03 -8.8769E-03     -69.846     -41.161     -3.3872     -2.4312
  -0.1200     -0.1069      5.4217  3.1594E+07  9.1843E+06
     x(FT)      0.0000      0.0000      3.0400      2.2800      0.0000      0.0000
   2.2800      0.7600      58.520      0.0000      0.0000
       10  -7.9731E-03 -8.8399E-03     -70.087     -41.139     -3.4023     -2.4311
  -0.1206     -0.1072      5.7030  3.1594E+07  9.1843E+06
     x(FT)      0.0000      0.0000      3.0400      2.2800      0.0000      0.0000
   2.2800      0.7600      0.0000      0.0000      0.0000
```

```
      11  -7.1920E-03 -7.9484E-03     -68.954     -36.885     -3.0374     -2.0687
  -0.1025   -0.082650      4.3435  3.1594E+07  9.1843E+06
     x(FT)      0.0000      0.0000      3.0400      2.2800      0.0000      0.0000
   3.0400      0.7600      59.280      0.0000      0.0000
      12  -8.4533E-03 -7.9484E-03     -77.642     -35.511     -3.3929     -1.9739
  -0.1123   -0.077852      4.6394  3.1594E+07  9.1843E+06
     x(FT)      0.0000      0.0000      3.0400      2.2800      0.0000      0.0000
   3.0400      0.7600      0.0000      0.0000      0.0000
      13  -9.7147E-03 -7.9484E-03     -85.791     -34.260     -3.7168     -1.8870
  -0.1212   -0.073408      4.9353  3.1594E+07  9.1843E+06
     x(FT)      0.0000      0.0000      3.0400      2.2800      0.0000      0.0000
   3.0400      0.7600      0.0000      0.0000      0.0000
      14    -0.010976 -7.9484E-03     -95.901     -33.970     -4.1529     -1.8696
  -0.1336   -0.072911      5.2313  3.1594E+07  9.1843E+06
     x(FT)      0.0000      0.0000      3.0400      2.2800      0.0000      0.0000
   3.0400      0.7600      60.800      0.0000      0.0000
      15    -0.012237 -7.9484E-03     -103.83     -33.208     -4.4617     -1.8040
  -0.1421   -0.069530      5.5272  3.1594E+07  9.1843E+06
     x(FT)      0.0000      0.0000      3.0400      3.0400      0.0000      0.0000
   3.0400      0.7600      0.0000      0.0000      0.0000

     Min.   -0.012237 -8.9880E-03     -103.83     -41.161     -4.4617     -2.4312
  -0.1421     -0.1072      4.3435  3.1594E+07  9.1843E+06
   Pile N.      15           6          15           9          15           9
   15          10          11           1           1

      * MAXIMUM VALUES AND LOCATIONS *

     PILE     DISPL.      DISPL.      MOMENT      MOMENT       SHEAR       SHEAR
SOIL REACT  SOIL REACT     TOTAL    FLEX. RIG.  FLEX. RIG.
               y-DIR       z-DIR       z-DIR       y-DIR       y-DIR       z-DIR
  y-DIR       z-DIR      STRESS       z-DIR       y-DIR
               IN          IN        KIP-IN      KIP-IN        KIP         KIP
 KIP/IN      KIP/IN     KIP/IN**2   KIP-IN**2   KIP-IN**2
    ******  **********  **********  **********  **********  **********  **********
**********  **********  **********  **********  **********
        1     0.027482  1.1223E-03      197.74      1.8866      7.9849      0.4145
   0.2401  4.4874E-03      6.1864  3.1594E+07  9.1843E+06
     x(FT)      0.0000      8.3600      3.8000      15.200      0.0000      4.5600
   3.0400      7.6000      3.0400      0.0000      0.0000
        2     0.028670  1.1265E-03      203.75      1.8798      8.1698      0.4051
   0.2451  4.3725E-03      6.5096  3.1594E+07  9.1843E+06
     x(FT)      0.0000      8.3600      3.8000      15.200      0.0000      4.5600
   3.0400      7.6000      3.0400      0.0000      0.0000
        3     0.029858  1.1304E-03      209.67      1.8722      8.3505      0.3988
   0.2499  4.2635E-03      6.8343  3.1594E+07  9.1843E+06
     x(FT)      0.0000      8.3600      3.8000      15.200      0.0000      5.3200
   3.0400      7.6000      3.8000      0.0000      0.0000
        4     0.031047  1.1284E-03      218.69      1.8740      8.7106      0.4009
   0.2604  4.2989E-03      7.1821  3.1594E+07  9.1843E+06
```

```
     x(FT)      0.0000      8.3600      3.8000      15.200      0.0000      5.3200
   3.0400      7.6000      3.8000      0.0000      0.0000
        5    0.032235  1.1314E-03      225.02      1.8682      8.9146      0.3966
   0.2660  4.2186E-03      7.5132  3.1594E+07  9.1843E+06
     x(FT)      0.0000      8.3600      3.8000      15.200      0.0000      5.3200
   3.0400      7.6000      3.8000      0.0000      0.0000
        6   9.5255E-04  1.1309E-03      5.0793      2.3777      0.8012      0.6395
7.7184E-03  8.0277E-03      5.5279  3.1594E+07  9.1843E+06
     x(FT)      9.8800      7.6000      16.720      13.680      6.0800      4.5600
   11.400      4.5600      2.2800      0.0000      0.0000
        7   9.5344E-04  1.1269E-03      5.0839      2.3695      0.8021      0.6379
7.7265E-03  8.0674E-03      5.8067  3.1594E+07  9.1843E+06
     x(FT)      9.8800      7.6000      16.720      13.680      6.0800      4.5600
   11.400      4.5600      2.2800      0.0000      0.0000
        8   9.5432E-04  1.1228E-03      5.0886      2.3613      0.8030      0.6364
7.7346E-03  8.1065E-03      6.0855  3.1594E+07  9.1843E+06
     x(FT)      9.8800      7.6000      16.720      13.680      6.0800      4.5600
   11.400      4.5600      2.2800      0.0000      0.0000
        9   9.6505E-04  1.1098E-03      5.1807      2.3636      0.8286      0.6539
8.0276E-03  9.4852E-03      6.3843  3.1594E+07  9.1843E+06
     x(FT)      9.1200      7.6000      16.720      12.920      5.3200      4.5600
   11.400      4.5600      2.2800      0.0000      0.0000
       10   9.6737E-04  1.1043E-03      5.1967      2.3603      0.8334      0.6550
8.0761E-03  9.7145E-03      6.6659  3.1594E+07  9.1843E+06
     x(FT)      9.1200      7.6000      16.720      12.920      5.3200      4.5600
   11.400      4.5600      2.2800      0.0000      0.0000
       11   1.0769E-03  1.1652E-03      5.4015      2.3342      0.8034      0.6404
7.3106E-03    0.013920      5.2214  3.1594E+07  9.1843E+06
     x(FT)      9.1200      7.6000      16.720      13.680      5.3200      3.8000
   11.400      4.5600      3.0400      0.0000      0.0000
       12   1.2386E-03  1.1616E-03      6.0918      2.2552      0.8907      0.5951
7.9448E-03    0.011532      5.5246  3.1594E+07  9.1843E+06
     x(FT)      9.1200      7.6000      17.480      13.680      5.3200      3.8000
   11.400      4.5600      3.0400      0.0000      0.0000
       13   1.3967E-03  1.1586E-03      6.8364      2.1781      0.9693      0.5591
8.4933E-03  9.3610E-03      5.8312  3.1594E+07  9.1843E+06
     x(FT)      9.8800      7.6000      17.480      13.680      5.3200      4.5600
   11.400      4.5600      3.0400      0.0000      0.0000
       14   1.5719E-03  1.1452E-03      7.6631      2.1335      1.0840      0.5551
9.4245E-03  8.8245E-03      6.1609  3.1594E+07  9.1843E+06
     x(FT)      9.8800      7.6000      17.480      13.680      5.3200      4.5600
   11.400      4.5600      3.0400      0.0000      0.0000
       15   1.7385E-03  1.1427E-03      8.3743      2.0886      1.1598      0.5350
9.9566E-03  7.1836E-03      6.4765  3.1594E+07  9.1843E+06
     x(FT)      9.8800      7.6000      17.480      14.440      5.3200      4.5600
   11.400      4.5600      3.0400      0.0000      0.0000

      Max.    0.032235  1.1652E-03      225.02      2.3777      8.9146      0.6550
   0.2660    0.013920      7.5132  3.1594E+07  9.1843E+06
   Pile N.       5          11           5           6           5          10
```

5 11 5 1 1

LOAD CASE : 9
CASE NAME : STR IV-L1

LOAD TYPE : Dead, DL

REDUCTION FACTORS FOR CLOSELY-SPACED PILE GROUPS, COMBINED Y AND Z DIRECTIONS
ESTIMATED USING MOVEMENT IN THE DIRECTION OF PILE CAP DISPLACEMENTS

GROUP NO	P-FACTOR	Y-FACTOR
1	0.8600	1.0000
2	0.8600	1.0000
3	0.8600	1.0000
4	0.8600	1.0000
5	0.8600	1.0000
6	0.7210	1.0000
7	0.7210	1.0000
8	0.7210	1.0000
9	0.7210	1.0000
10	0.7210	1.0000
11	0.5820	1.0000
12	0.5820	1.0000
13	0.5820	1.0000
14	0.5820	1.0000
15	0.5820	1.0000

* TABLE L * COMPUTATION ON PILE CAP

* EQUIVALENT CONCENTRATED LOAD AT ORIGIN *

VERT. LOAD,KIPS	HOR. LOAD Y,KIPS	HOR. LOAD Z,KIPS
2701.98	30.9100	0.00000

MOMENT X ,KIP-IN	MOMENT Y,KIP-IN	MOMENT Z,KIP-IN
0.00000	0.00000	8261.37

* DISPLACEMENT OF GROUPED PILE FOUNDATION AT ORIGIN *

VERTICAL ,IN	HORIZONTAL Y,IN	HORIZONTAL Z,IN
0.15191	0.0105807	-6.82576E-16

ANGLE ROT. X,RAD	ANGLE ROT. Y,RAD	ANGLE ROT. Z,RAD
2.80090E-16	-2.07866E-16	2.33627E-04

* PASSIVE RESISTANCE IN PILE CAP *

HOR. LOAD Y,KIP	HOR. LOAD Z,KIP	POSITION, FT	EQ. DIAM, FT
7.72100	4.28602E-15	-1.55556	35.1141

THE GLOBAL STRUCTURAL COORDINATE SYSTEM
---

* PILE TOP DISPLACEMENTS *

PILE GROUP	DISP. X,IN	DISP. Y,IN	DISP. Z,IN	ROT. X,RAD	ROT. Y,RAD	ROT. Z,RAD
**********	**********	**********	**********	**********	**********	**********
1	0.1659	0.010581	-1.7488E-14	2.8009E-16	-2.0787E-16	2.3363E-04
2	0.1659	0.010581	-1.7488E-14	2.8009E-16	-2.0787E-16	2.3363E-04
3	0.1659	0.010581	-1.7488E-14	2.8009E-16	-2.0787E-16	2.3363E-04
4	0.1659	0.010581	-1.7488E-14	2.8009E-16	-2.0787E-16	2.3363E-04
5	0.1659	0.010581	-1.7488E-14	2.8009E-16	-2.0787E-16	2.3363E-04
6	0.1519	0.010581	-6.8258E-16	2.8009E-16	-2.0787E-16	2.3363E-04
7	0.1519	0.010581	-6.8258E-16	2.8009E-16	-2.0787E-16	2.3363E-04
8	0.1519	0.010581	-6.8258E-16	2.8009E-16	-2.0787E-16	2.3363E-04
9	0.1519	0.010581	-6.8258E-16	2.8009E-16	-2.0787E-16	2.3363E-04
10	0.1519	0.010581	-6.8258E-16	2.8009E-16	-2.0787E-16	2.3363E-04
11	0.1379	0.010581	1.6123E-14	2.8009E-16	-2.0787E-16	2.3363E-04
12	0.1379	0.010581	1.6123E-14	2.8009E-16	-2.0787E-16	2.3363E-04
13	0.1379	0.010581	1.6123E-14	2.8009E-16	-2.0787E-16	2.3363E-04
14	0.1379	0.010581	1.6123E-14	2.8009E-16	-2.0787E-16	2.3363E-04
15	0.1379	0.010581	1.6123E-14	2.8009E-16	-2.0787E-16	2.3363E-04

```
      MINIMUM         0.1379     0.010581  -1.7488E-14   2.8009E-16  -2.0787E-16
2.3363E-04
      Pile N.         11            1            1            1            1
    1
      MAXIMUM         0.1659     0.010581   1.6123E-14   2.8009E-16  -2.0787E-16
2.3363E-04
      Pile N.          1            1           11            1            1
    1

      * PILE TOP REACTIONS *

     PILE GROUP   FOR. X,KIP   FOR. Y,KIP   FOR. Z,KIP MOM X,KIP-IN MOM Y,KIP-IN
MOM Z,KIP-IN
     **********  ***********  ***********  ***********  ***********  ***********
***********
         1            194.72      -22.115  -3.0547E-12  -2.8634E-26  -1.7185E-25
   0.0000
         2            194.72      -22.115  -3.0547E-12       0.0000       0.0000
   0.0000
         3            194.72      -22.115  -3.0547E-12       0.0000       0.0000
   0.0000
         4            194.72      -22.115  -3.0547E-12       0.0000       0.0000
   0.0000
         5            194.72      -22.115  -3.0547E-12       0.0000       0.0000
   0.0000
         6            178.98       3.3505  -3.4219E-13       0.0000       0.0000
   0.0000
         7            178.98       3.3505  -3.4219E-13       0.0000       0.0000
   0.0000
         8            178.98       3.3505  -3.4219E-13   5.8646E-30  -5.8646E-30
-9.5776E-14
         9            178.98       3.3505  -3.4219E-13       0.0000       0.0000
   0.0000
        10            178.98       3.3505  -3.4219E-13       0.0000       0.0000
   0.0000
        11            166.69       23.377   3.6930E-12       0.0000       0.0000
   0.0000
        12            166.69       23.377   3.6930E-12       0.0000       0.0000
   0.0000
        13            166.69       23.377   3.6930E-12  -2.8634E-26   1.7185E-25
   0.0000
        14            166.69       23.377   3.6930E-12   2.8634E-26  -1.7185E-25
   0.0000
        15            166.69       23.377   3.6930E-12  -2.8634E-26   1.7185E-25
   0.0000

      MINIMUM         166.69      -22.115  -3.0547E-12  -2.8634E-26  -1.7185E-25
-9.5776E-14
      Pile N.         11            1            1            1            1
```

```
    8
       MAXIMUM         194.72       23.377   3.6930E-12   2.8634E-26   1.7185E-25
   0.0000
       Pile N.          1           11           11           14           13
    1


       THE PILE COORDINATE SYSTEM (LOCAL AXES)
       ---------------------------------------

       * PILE TOP DISPLACEMENTS *

      PILE GROUP   DISP. x,IN   DISP. y,IN   DISP. z,IN   ROT. x,RAD   ROT. y,RAD
ROT. z,RAD
      **********  ***********  ***********  ***********  ***********  ***********
***********
          1            0.1619     0.037708  -1.7488E-14   3.1045E-16  -1.5900E-16
2.3363E-04
          2            0.1619     0.037708  -1.7488E-14   3.1045E-16  -1.5900E-16
2.3363E-04
          3            0.1619     0.037708  -1.7488E-14   3.1045E-16  -1.5900E-16
2.3363E-04
          4            0.1619     0.037708  -1.7488E-14   3.1045E-16  -1.5900E-16
2.3363E-04
          5            0.1619     0.037708  -1.7488E-14   3.1045E-16  -1.5900E-16
2.3363E-04
          6            0.1519  -6.9123E-16    -0.010581   2.8010E-16   2.3363E-04
2.0788E-16
          7            0.1519  -6.9123E-16    -0.010581   2.8010E-16   2.3363E-04
2.0788E-16
          8            0.1519  -6.9123E-16    -0.010581   2.8010E-16   2.3363E-04
2.0788E-16
          9            0.1519  -6.9123E-16    -0.010581   2.8010E-16   2.3363E-04
2.0788E-16
         10            0.1519  -6.9123E-16    -0.010581   2.8010E-16   2.3363E-04
2.0788E-16
         11            0.1378    -0.012226   1.6123E-14   2.4212E-16  -2.5107E-16
2.3363E-04
         12            0.1378    -0.012226   1.6123E-14   2.4212E-16  -2.5107E-16
2.3363E-04
         13            0.1378    -0.012226   1.6123E-14   2.4212E-16  -2.5107E-16
2.3363E-04
         14            0.1378    -0.012226   1.6123E-14   2.4212E-16  -2.5107E-16
2.3363E-04
         15            0.1378    -0.012226   1.6123E-14   2.4212E-16  -2.5107E-16
2.3363E-04

       MINIMUM         0.1378    -0.012226    -0.010581   2.4212E-16  -2.5107E-16
2.0788E-16
       Pile N.         11           11            6           11           11
```

```
    6
       MAXIMUM         0.1619     0.037708   1.6123E-14   3.1045E-16   2.3363E-04
2.3363E-04
       Pile N.          1            1           11            1            6
    1

       * PILE TOP REACTIONS *

      PILE GROUP   AXIAL,KIP    LAT. y,KIP   LAT. z,KIP MOM x,KIP-IN MOM y,KIP-IN
MOM z,KIP-IN
      **********  ***********  ***********  ***********  ***********  ***********
***********
          1            195.71       10.190  -3.0547E-12       0.0000  -1.7422E-25
   0.0000
          2            195.71       10.190  -3.0547E-12       0.0000       0.0000
   0.0000
          3            195.71       10.190  -3.0547E-12       0.0000       0.0000
   0.0000
          4            195.71       10.190  -3.0547E-12       0.0000       0.0000
   0.0000
          5            195.71       10.190  -3.0547E-12       0.0000       0.0000
   0.0000
          6            178.98  -3.5294E-13      -3.3505       0.0000       0.0000
   0.0000
          7            178.98  -3.5294E-13      -3.3505       0.0000       0.0000
   0.0000
          8            178.98  -3.5294E-13      -3.3505       0.0000  -9.5776E-14
   0.0000
          9            178.98  -3.5294E-13      -3.3505       0.0000       0.0000
   0.0000
         10            178.98  -3.5294E-13      -3.3505       0.0000       0.0000
   0.0000
         11            168.27      -4.3384   3.6930E-12       0.0000       0.0000
   0.0000
         12            168.27      -4.3384   3.6930E-12       0.0000       0.0000
   0.0000
         13            168.27      -4.3384   3.6930E-12       0.0000   1.7422E-25
   0.0000
         14            168.27      -4.3384   3.6930E-12       0.0000  -1.7422E-25
   0.0000
         15            168.27      -4.3384   3.6930E-12       0.0000   1.7422E-25
   0.0000

       MINIMUM         168.27      -4.3384      -3.3505       0.0000  -9.5776E-14
   0.0000
       Pile N.         11           11            6            1            8
    1
       MAXIMUM         195.71       10.190   3.6930E-12       0.0000   1.7422E-25
   0.0000
       Pile N.          1            1           11            1           13
```

```
    1

      PILE GROUP   STRESS,KIP/IN**2
      **********  ****************
          1            6.9216
          2            6.9216
          3            6.9216
          4            6.9216
          5            6.9216
          6            6.3303
          7            6.3303
          8            6.3303
          9            6.3303
         10            6.3303
         11            5.9512
         12            5.9512
         13            5.9512
         14            5.9512
         15            5.9512

       MINIMUM         5.9512
       Pile N.         11
       MAXIMUM         6.9216
       Pile N.          1

       * EFFECTS FOR LATERALLY LOADED PILE *

       * MINIMUM VALUES AND LOCATIONS *

     PILE     DISPL.      DISPL.      MOMENT      MOMENT       SHEAR       SHEAR
SOIL REACT  SOIL REACT     TOTAL    FLEX. RIG.  FLEX. RIG.
               y-DIR       z-DIR       z-DIR       y-DIR       y-DIR       z-DIR
  y-DIR       z-DIR      STRESS       z-DIR       y-DIR
               IN          IN        KIP-IN      KIP-IN        KIP         KIP
 KIP/IN      KIP/IN     KIP/IN**2   KIP-IN**2   KIP-IN**2
    ******  **********  **********  **********  **********  **********  **********
**********  **********  **********  **********  **********
        1  -4.9201E-03 -1.7488E-14     -23.948 -5.7602E-11     -2.5014 -2.7434E-12
-0.021474 -9.1184E-14      6.9216  3.1594E+07  9.1843E+06
     x(FT)      10.640      0.0000      19.760      3.0400      6.8400      0.0000
   20.520      0.7600      0.0000      0.0000      0.0000
        2  -4.9201E-03 -1.7488E-14     -23.948 -5.7602E-11     -2.5014 -2.7434E-12
-0.021474 -9.1184E-14      6.9216  3.1594E+07  9.1843E+06
     x(FT)      10.640      0.0000      19.760      3.0400      6.8400      0.0000
   20.520      0.7600      0.0000      0.0000      0.0000
        3  -4.9201E-03 -1.7488E-14     -23.948 -5.7602E-11     -2.5014 -2.7434E-12
-0.021474 -9.1184E-14      6.9216  3.1594E+07  9.1843E+06
     x(FT)      10.640      0.0000      19.760      3.0400      6.8400      0.0000
   20.520      0.7600      0.0000      0.0000      0.0000
        4  -4.9201E-03 -1.7488E-14     -23.948 -5.7602E-11     -2.5014 -2.7434E-12
```

```
-0.021474 -9.1184E-14      6.9216  3.1594E+07  9.1843E+06
     x(FT)      10.640      0.0000      19.760      3.0400      6.8400      0.0000
   20.520      0.7600      0.0000      0.0000      0.0000
        5  -4.9201E-03 -1.7488E-14     -23.948 -5.7602E-11     -2.5014 -2.7434E-12
-0.021474 -9.1184E-14      6.9216  3.1594E+07  9.1843E+06
     x(FT)      10.640      0.0000      19.760      3.0400      6.8400      0.0000
   20.520      0.7600      0.0000      0.0000      0.0000
        6  -6.9123E-16   -0.010581 -7.5141E-12     -53.606 -3.3538E-13     -3.0817
-1.1452E-14     -0.1287      6.3303  3.1594E+07  9.1843E+06
     x(FT)      0.0000      0.0000      3.8000      2.2800      0.0000      0.0000
   2.2800      0.7600      0.0000      0.0000      0.0000
        7  -6.9123E-16   -0.010581 -7.5141E-12     -53.606 -3.3538E-13     -3.0817
-1.1452E-14     -0.1287      6.3303  3.1594E+07  9.1843E+06
     x(FT)      0.0000      0.0000      3.8000      2.2800      0.0000      0.0000
   2.2800      0.7600      0.0000      0.0000      0.0000
        8  -6.9123E-16   -0.010581 -7.5141E-12     -53.606 -3.3538E-13     -3.0817
-1.1452E-14     -0.1287      6.3303  3.1594E+07  9.1843E+06
     x(FT)      0.0000      0.0000      3.8000      2.2800      0.0000      0.0000
   2.2800      0.7600      46.360      0.0000      0.0000
        9  -6.9123E-16   -0.010581 -7.5141E-12     -53.606 -3.3538E-13     -3.0817
-1.1452E-14     -0.1287      6.3303  3.1594E+07  9.1843E+06
     x(FT)      0.0000      0.0000      3.8000      2.2800      0.0000      0.0000
   2.2800      0.7600      0.0000      0.0000      0.0000
       10  -6.9123E-16   -0.010581 -7.5141E-12     -53.606 -3.3538E-13     -3.0817
-1.1452E-14     -0.1287      6.3303  3.1594E+07  9.1843E+06
     x(FT)      0.0000      0.0000      3.8000      2.2800      0.0000      0.0000
   2.2800      0.7600      0.0000      0.0000      0.0000
       11    -0.012226 -2.1993E-15     -97.301 -3.8410E-12     -4.1024 -1.0195E-12
  -0.1208 -1.4380E-14      5.9512  3.1594E+07  9.1843E+06
     x(FT)      0.0000      7.6000      3.8000      14.440      0.0000      4.5600
   3.0400      5.3200      0.0000      0.0000      0.0000
       12    -0.012226 -2.1993E-15     -97.301 -3.8410E-12     -4.1024 -1.0195E-12
  -0.1208 -1.4380E-14      5.9512  3.1594E+07  9.1843E+06
     x(FT)      0.0000      7.6000      3.8000      14.440      0.0000      4.5600
   3.0400      5.3200      0.0000      0.0000      0.0000
       13    -0.012226 -2.1993E-15     -97.301 -3.8410E-12     -4.1024 -1.0195E-12
  -0.1208 -1.4380E-14      5.9512  3.1594E+07  9.1843E+06
     x(FT)      0.0000      7.6000      3.8000      14.440      0.0000      4.5600
   3.0400      5.3200      0.0000      0.0000      0.0000
       14    -0.012226 -2.1993E-15     -97.301 -3.8410E-12     -4.1024 -1.0195E-12
  -0.1208 -1.4380E-14      5.9512  3.1594E+07  9.1843E+06
     x(FT)      0.0000      7.6000      3.8000      14.440      0.0000      4.5600
   3.0400      5.3200      0.0000      0.0000      0.0000
       15    -0.012226 -2.1993E-15     -97.301 -3.8410E-12     -4.1024 -1.0195E-12
  -0.1208 -1.4380E-14      5.9512  3.1594E+07  9.1843E+06
     x(FT)      0.0000      7.6000      3.8000      14.440      0.0000      4.5600
   3.0400      5.3200      0.0000      0.0000      0.0000

     Min.   -0.012226   -0.010581     -97.301     -53.606     -4.1024     -3.0817
  -0.1208     -0.1287      5.9512  3.1594E+07  9.1843E+06
```

```
   Pile N.      11           6          11           6          11           6
   11           6          11           1           1

       * MAXIMUM VALUES AND LOCATIONS *

     PILE     DISPL.      DISPL.      MOMENT      MOMENT       SHEAR       SHEAR
SOIL REACT  SOIL REACT     TOTAL    FLEX. RIG.  FLEX. RIG.
               y-DIR       z-DIR       z-DIR       y-DIR       y-DIR       z-DIR
  y-DIR       z-DIR      STRESS       z-DIR       y-DIR
                IN          IN        KIP-IN      KIP-IN        KIP         KIP
 KIP/IN      KIP/IN     KIP/IN**2   KIP-IN**2   KIP-IN**2
    ******  **********  **********  **********  **********  **********  **********
**********  **********  **********  **********  **********
        1     0.037708  2.4945E-15      249.20  3.9714E-12      9.5185  8.0831E-13
   0.2757  8.0769E-15      8.4542  3.1594E+07  9.1843E+06
     x(FT)      0.0000      8.3600      3.8000      15.960      0.0000      5.3200
   3.0400      7.6000      3.8000      0.0000      0.0000
        2     0.037708  2.4945E-15      249.20  3.9714E-12      9.5185  8.0831E-13
   0.2757  8.0769E-15      8.4542  3.1594E+07  9.1843E+06
     x(FT)      0.0000      8.3600      3.8000      15.960      0.0000      5.3200
   3.0400      7.6000      3.8000      0.0000      0.0000
        3     0.037708  2.4945E-15      249.20  3.9714E-12      9.5185  8.0831E-13
   0.2757  8.0769E-15      8.4542  3.1594E+07  9.1843E+06
     x(FT)      0.0000      8.3600      3.8000      15.960      0.0000      5.3200
   3.0400      7.6000      3.8000      0.0000      0.0000
        4     0.037708  2.4945E-15      249.20  3.9714E-12      9.5185  8.0831E-13
   0.2757  8.0769E-15      8.4542  3.1594E+07  9.1843E+06
     x(FT)      0.0000      8.3600      3.8000      15.960      0.0000      5.3200
   3.0400      7.6000      3.8000      0.0000      0.0000
        5     0.037708  2.4945E-15      249.20  3.9714E-12      9.5185  8.0831E-13
   0.2757  8.0769E-15      8.4542  3.1594E+07  9.1843E+06
     x(FT)      0.0000      8.3600      3.8000      15.960      0.0000      5.3200
   3.0400      7.6000      3.8000      0.0000      0.0000
        6   1.1144E-16  1.5657E-03  8.7507E-13      3.8567  9.7376E-14      0.9190
1.7834E-15    0.025019      7.4643  3.1594E+07  9.1843E+06
     x(FT)      8.3600      6.8400      15.200      12.920      5.3200      3.8000
   15.200      4.5600      2.2800      0.0000      0.0000
        7   1.1144E-16  1.5657E-03  8.7507E-13      3.8567  9.7376E-14      0.9190
1.7834E-15    0.025019      7.4643  3.1594E+07  9.1843E+06
     x(FT)      8.3600      6.8400      15.200      12.920      5.3200      3.8000
   15.200      4.5600      2.2800      0.0000      0.0000
        8   1.1144E-16  1.5657E-03  8.7507E-13      3.8567  9.7376E-14      0.9190
1.7834E-15    0.025019      7.4643  3.1594E+07  9.1843E+06
     x(FT)      8.3600      6.8400      15.200      12.920      5.3200      3.8000
   15.200      4.5600      2.2800      0.0000      0.0000
        9   1.1144E-16  1.5657E-03  8.7507E-13      3.8567  9.7376E-14      0.9190
1.7834E-15    0.025019      7.4643  3.1594E+07  9.1843E+06
     x(FT)      8.3600      6.8400      15.200      12.920      5.3200      3.8000
   15.200      4.5600      2.2800      0.0000      0.0000
       10   1.1144E-16  1.5657E-03  8.7507E-13      3.8567  9.7376E-14      0.9190
```

```
1.7834E-15    0.025019      7.4643  3.1594E+07  9.1843E+06
     x(FT)      8.3600      6.8400      15.200      12.920      5.3200      3.8000
   15.200      4.5600      2.2800      0.0000      0.0000
       11   1.8004E-03  1.6123E-14      8.4906  6.3516E-11      1.0997  3.3818E-12
8.8183E-03  1.2900E-13      6.5496  3.1594E+07  9.1843E+06
     x(FT)      9.8800      0.0000      18.240      3.0400      6.0800      0.0000
   11.400      0.7600      3.8000      0.0000      0.0000
       12   1.8004E-03  1.6123E-14      8.4906  6.3516E-11      1.0997  3.3818E-12
8.8183E-03  1.2900E-13      6.5496  3.1594E+07  9.1843E+06
     x(FT)      9.8800      0.0000      18.240      3.0400      6.0800      0.0000
   11.400      0.7600      3.8000      0.0000      0.0000
       13   1.8004E-03  1.6123E-14      8.4906  6.3516E-11      1.0997  3.3818E-12
8.8183E-03  1.2900E-13      6.5496  3.1594E+07  9.1843E+06
     x(FT)      9.8800      0.0000      18.240      3.0400      6.0800      0.0000
   11.400      0.7600      3.8000      0.0000      0.0000
       14   1.8004E-03  1.6123E-14      8.4906  6.3516E-11      1.0997  3.3818E-12
8.8183E-03  1.2900E-13      6.5496  3.1594E+07  9.1843E+06
     x(FT)      9.8800      0.0000      18.240      3.0400      6.0800      0.0000
   11.400      0.7600      3.8000      0.0000      0.0000
       15   1.8004E-03  1.6123E-14      8.4906  6.3516E-11      1.0997  3.3818E-12
8.8183E-03  1.2900E-13      6.5496  3.1594E+07  9.1843E+06
     x(FT)      9.8800      0.0000      18.240      3.0400      6.0800      0.0000
   11.400      0.7600      3.8000      0.0000      0.0000

      Max.    0.037708  1.5657E-03      249.20      3.8567      9.5185      0.9190
   0.2757    0.025019      8.4542  3.1594E+07  9.1843E+06
   Pile N.       1           6           1           6           1           6
    1           6           1           1           1


     LOAD CASE :    10
     CASE NAME : STR IV-L2

     LOAD TYPE : Dead, DL

       REDUCTION FACTORS FOR CLOSELY-SPACED PILE GROUPS, COMBINED Y AND Z DIRECTIONS
       ESTIMATED USING MOVEMENT IN THE DIRECTION OF PILE CAP DISPLACEMENTS

            GROUP NO     P-FACTOR     Y-FACTOR

                1           0.8600       1.0000
                2           0.8600       1.0000
                3           0.8600       1.0000
                4           0.8600       1.0000
                5           0.8600       1.0000
                6           0.7210       1.0000
                7           0.7210       1.0000
                8           0.7210       1.0000
                9           0.7210       1.0000
```

10	0.7210	1.0000
11	0.5820	1.0000
12	0.5820	1.0000
13	0.5820	1.0000
14	0.5820	1.0000
15	0.5820	1.0000

* TABLE L * COMPUTATION ON PILE CAP

* EQUIVALENT CONCENTRATED LOAD AT ORIGIN *

VERT. LOAD,KIPS	HOR. LOAD Y,KIPS	HOR. LOAD Z,KIPS
2701.98	30.9100	0.00000

MOMENT X ,KIP-IN	MOMENT Y,KIP-IN	MOMENT Z,KIP-IN
0.00000	0.00000	8261.37

* DISPLACEMENT OF GROUPED PILE FOUNDATION AT ORIGIN *

VERTICAL ,IN	HORIZONTAL Y,IN	HORIZONTAL Z,IN
0.15191	0.0105807	-6.82576E-16

ANGLE ROT. X,RAD	ANGLE ROT. Y,RAD	ANGLE ROT. Z,RAD
2.80090E-16	-2.07866E-16	2.33627E-04

* PASSIVE RESISTANCE IN PILE CAP *

HOR. LOAD Y,KIP	HOR. LOAD Z,KIP	POSITION, FT	EQ. DIAM, FT
7.72100	4.28602E-15	-1.55556	35.1141

THE GLOBAL STRUCTURAL COORDINATE SYSTEM
---

* PILE TOP DISPLACEMENTS *

PILE GROUP	DISP. X,IN	DISP. Y,IN	DISP. Z,IN	ROT. X,RAD	ROT. Y,RAD	ROT. Z,RAD
**********	**********	**********	**********	**********	**********	**********
1	0.1659	0.010581	-1.7488E-14	2.8009E-16	-2.0787E-16	2.3363E-04
2	0.1659	0.010581	-1.7488E-14	2.8009E-16	-2.0787E-16	

```
2.3363E-04
          3            0.1659     0.010581  -1.7488E-14   2.8009E-16  -2.0787E-16
2.3363E-04
          4            0.1659     0.010581  -1.7488E-14   2.8009E-16  -2.0787E-16
2.3363E-04
          5            0.1659     0.010581  -1.7488E-14   2.8009E-16  -2.0787E-16
2.3363E-04
          6            0.1519     0.010581  -6.8258E-16   2.8009E-16  -2.0787E-16
2.3363E-04
          7            0.1519     0.010581  -6.8258E-16   2.8009E-16  -2.0787E-16
2.3363E-04
          8            0.1519     0.010581  -6.8258E-16   2.8009E-16  -2.0787E-16
2.3363E-04
          9            0.1519     0.010581  -6.8258E-16   2.8009E-16  -2.0787E-16
2.3363E-04
         10            0.1519     0.010581  -6.8258E-16   2.8009E-16  -2.0787E-16
2.3363E-04
         11            0.1379     0.010581   1.6123E-14   2.8009E-16  -2.0787E-16
2.3363E-04
         12            0.1379     0.010581   1.6123E-14   2.8009E-16  -2.0787E-16
2.3363E-04
         13            0.1379     0.010581   1.6123E-14   2.8009E-16  -2.0787E-16
2.3363E-04
         14            0.1379     0.010581   1.6123E-14   2.8009E-16  -2.0787E-16
2.3363E-04
         15            0.1379     0.010581   1.6123E-14   2.8009E-16  -2.0787E-16
2.3363E-04

       MINIMUM         0.1379     0.010581  -1.7488E-14   2.8009E-16  -2.0787E-16
2.3363E-04
       Pile N.         11            1            1            1            1
    1
       MAXIMUM         0.1659     0.010581   1.6123E-14   2.8009E-16  -2.0787E-16
2.3363E-04
       Pile N.          1            1           11            1            1
    1

       * PILE TOP REACTIONS *

      PILE GROUP   FOR. X,KIP   FOR. Y,KIP   FOR. Z,KIP MOM X,KIP-IN MOM Y,KIP-IN
MOM Z,KIP-IN
      **********  ***********  ***********  ***********  ***********  ***********
***********
          1            194.72      -22.115  -3.0547E-12  -2.8634E-26  -1.7185E-25
   0.0000
          2            194.72      -22.115  -3.0547E-12       0.0000       0.0000
   0.0000
          3            194.72      -22.115  -3.0547E-12       0.0000       0.0000
   0.0000
          4            194.72      -22.115  -3.0547E-12       0.0000       0.0000
```

```
   0.0000
          5            194.72      -22.115  -3.0547E-12       0.0000       0.0000
   0.0000
          6            178.98       3.3505  -3.4219E-13       0.0000       0.0000
   0.0000
          7            178.98       3.3505  -3.4219E-13       0.0000       0.0000
   0.0000
          8            178.98       3.3505  -3.4219E-13   5.8646E-30  -5.8646E-30
-9.5776E-14
          9            178.98       3.3505  -3.4219E-13       0.0000       0.0000
   0.0000
         10            178.98       3.3505  -3.4219E-13       0.0000       0.0000
   0.0000
         11            166.69       23.377   3.6930E-12       0.0000       0.0000
   0.0000
         12            166.69       23.377   3.6930E-12       0.0000       0.0000
   0.0000
         13            166.69       23.377   3.6930E-12  -2.8634E-26   1.7185E-25
   0.0000
         14            166.69       23.377   3.6930E-12   2.8634E-26  -1.7185E-25
   0.0000
         15            166.69       23.377   3.6930E-12  -2.8634E-26   1.7185E-25
   0.0000

       MINIMUM         166.69      -22.115  -3.0547E-12  -2.8634E-26  -1.7185E-25
-9.5776E-14
       Pile N.         11            1            1            1            1
    8
       MAXIMUM         194.72       23.377   3.6930E-12   2.8634E-26   1.7185E-25
   0.0000
       Pile N.          1           11           11           14           13
    1


       THE PILE COORDINATE SYSTEM (LOCAL AXES)
       ---------------------------------------

       * PILE TOP DISPLACEMENTS *

      PILE GROUP   DISP. x,IN   DISP. y,IN   DISP. z,IN   ROT. x,RAD   ROT. y,RAD
ROT. z,RAD
      **********  ***********  ***********  ***********  ***********  ***********
***********
          1            0.1619     0.037708  -1.7488E-14   3.1045E-16  -1.5900E-16
2.3363E-04
          2            0.1619     0.037708  -1.7488E-14   3.1045E-16  -1.5900E-16
2.3363E-04
          3            0.1619     0.037708  -1.7488E-14   3.1045E-16  -1.5900E-16
2.3363E-04
          4            0.1619     0.037708  -1.7488E-14   3.1045E-16  -1.5900E-16
```

```
2.3363E-04
          5            0.1619     0.037708  -1.7488E-14   3.1045E-16  -1.5900E-16
2.3363E-04
          6            0.1519  -6.9123E-16    -0.010581   2.8010E-16   2.3363E-04
2.0788E-16
          7            0.1519  -6.9123E-16    -0.010581   2.8010E-16   2.3363E-04
2.0788E-16
          8            0.1519  -6.9123E-16    -0.010581   2.8010E-16   2.3363E-04
2.0788E-16
          9            0.1519  -6.9123E-16    -0.010581   2.8010E-16   2.3363E-04
2.0788E-16
         10            0.1519  -6.9123E-16    -0.010581   2.8010E-16   2.3363E-04
2.0788E-16
         11            0.1378    -0.012226   1.6123E-14   2.4212E-16  -2.5107E-16
2.3363E-04
         12            0.1378    -0.012226   1.6123E-14   2.4212E-16  -2.5107E-16
2.3363E-04
         13            0.1378    -0.012226   1.6123E-14   2.4212E-16  -2.5107E-16
2.3363E-04
         14            0.1378    -0.012226   1.6123E-14   2.4212E-16  -2.5107E-16
2.3363E-04
         15            0.1378    -0.012226   1.6123E-14   2.4212E-16  -2.5107E-16
2.3363E-04

       MINIMUM         0.1378    -0.012226    -0.010581   2.4212E-16  -2.5107E-16
2.0788E-16
       Pile N.         11           11            6           11           11
    6
       MAXIMUM         0.1619     0.037708   1.6123E-14   3.1045E-16   2.3363E-04
2.3363E-04
       Pile N.          1            1           11            1            6
    1

       * PILE TOP REACTIONS *

      PILE GROUP   AXIAL,KIP    LAT. y,KIP   LAT. z,KIP MOM x,KIP-IN MOM y,KIP-IN
MOM z,KIP-IN
      **********  ***********  ***********  ***********  ***********  ***********
***********
          1            195.71       10.190  -3.0547E-12       0.0000  -1.7422E-25
   0.0000
          2            195.71       10.190  -3.0547E-12       0.0000       0.0000
   0.0000
          3            195.71       10.190  -3.0547E-12       0.0000       0.0000
   0.0000
          4            195.71       10.190  -3.0547E-12       0.0000       0.0000
   0.0000
          5            195.71       10.190  -3.0547E-12       0.0000       0.0000
   0.0000
          6            178.98  -3.5294E-13      -3.3505       0.0000       0.0000
```

```
0.0000
       7            178.98  -3.5294E-13      -3.3505       0.0000       0.0000
0.0000
       8            178.98  -3.5294E-13      -3.3505       0.0000  -9.5776E-14
0.0000
       9            178.98  -3.5294E-13      -3.3505       0.0000       0.0000
0.0000
      10            178.98  -3.5294E-13      -3.3505       0.0000       0.0000
0.0000
      11            168.27      -4.3384   3.6930E-12       0.0000       0.0000
0.0000
      12            168.27      -4.3384   3.6930E-12       0.0000       0.0000
0.0000
      13            168.27      -4.3384   3.6930E-12       0.0000   1.7422E-25
0.0000
      14            168.27      -4.3384   3.6930E-12       0.0000  -1.7422E-25
0.0000
      15            168.27      -4.3384   3.6930E-12       0.0000   1.7422E-25
0.0000

    MINIMUM         168.27      -4.3384      -3.3505       0.0000  -9.5776E-14
0.0000
    Pile N.         11           11            6            1            8
 1
    MAXIMUM         195.71       10.190   3.6930E-12       0.0000   1.7422E-25
0.0000
    Pile N.          1            1           11            1           13
 1

   PILE GROUP   STRESS,KIP/IN**2
   **********  ****************
       1            6.9216
       2            6.9216
       3            6.9216
       4            6.9216
       5            6.9216
       6            6.3303
       7            6.3303
       8            6.3303
       9            6.3303
      10            6.3303
      11            5.9512
      12            5.9512
      13            5.9512
      14            5.9512
      15            5.9512

    MINIMUM         5.9512
    Pile N.         11
    MAXIMUM         6.9216
```

```
       Pile N.          1

       * EFFECTS FOR LATERALLY LOADED PILE *

       * MINIMUM VALUES AND LOCATIONS *

     PILE     DISPL.      DISPL.      MOMENT      MOMENT       SHEAR       SHEAR
SOIL REACT  SOIL REACT     TOTAL    FLEX. RIG.  FLEX. RIG.
               y-DIR       z-DIR       z-DIR       y-DIR       y-DIR       z-DIR
  y-DIR       z-DIR      STRESS       z-DIR       y-DIR
                IN          IN        KIP-IN      KIP-IN        KIP         KIP
 KIP/IN      KIP/IN     KIP/IN**2   KIP-IN**2   KIP-IN**2
    ******  **********  **********  **********  **********  **********  **********
**********  **********  **********  **********  **********
        1  -4.9201E-03 -1.7488E-14     -23.948 -5.7602E-11     -2.5014 -2.7434E-12
-0.021474 -9.1184E-14      6.9216  3.1594E+07  9.1843E+06
     x(FT)      10.640      0.0000      19.760      3.0400      6.8400      0.0000
   20.520      0.7600      0.0000      0.0000      0.0000
        2  -4.9201E-03 -1.7488E-14     -23.948 -5.7602E-11     -2.5014 -2.7434E-12
-0.021474 -9.1184E-14      6.9216  3.1594E+07  9.1843E+06
     x(FT)      10.640      0.0000      19.760      3.0400      6.8400      0.0000
   20.520      0.7600      0.0000      0.0000      0.0000
        3  -4.9201E-03 -1.7488E-14     -23.948 -5.7602E-11     -2.5014 -2.7434E-12
-0.021474 -9.1184E-14      6.9216  3.1594E+07  9.1843E+06
     x(FT)      10.640      0.0000      19.760      3.0400      6.8400      0.0000
   20.520      0.7600      0.0000      0.0000      0.0000
        4  -4.9201E-03 -1.7488E-14     -23.948 -5.7602E-11     -2.5014 -2.7434E-12
-0.021474 -9.1184E-14      6.9216  3.1594E+07  9.1843E+06
     x(FT)      10.640      0.0000      19.760      3.0400      6.8400      0.0000
   20.520      0.7600      0.0000      0.0000      0.0000
        5  -4.9201E-03 -1.7488E-14     -23.948 -5.7602E-11     -2.5014 -2.7434E-12
-0.021474 -9.1184E-14      6.9216  3.1594E+07  9.1843E+06
     x(FT)      10.640      0.0000      19.760      3.0400      6.8400      0.0000
   20.520      0.7600      0.0000      0.0000      0.0000
        6  -6.9123E-16   -0.010581 -7.5141E-12     -53.606 -3.3538E-13     -3.0817
-1.1452E-14     -0.1287      6.3303  3.1594E+07  9.1843E+06
     x(FT)      0.0000      0.0000      3.8000      2.2800      0.0000      0.0000
   2.2800      0.7600      0.0000      0.0000      0.0000
        7  -6.9123E-16   -0.010581 -7.5141E-12     -53.606 -3.3538E-13     -3.0817
-1.1452E-14     -0.1287      6.3303  3.1594E+07  9.1843E+06
     x(FT)      0.0000      0.0000      3.8000      2.2800      0.0000      0.0000
   2.2800      0.7600      0.0000      0.0000      0.0000
        8  -6.9123E-16   -0.010581 -7.5141E-12     -53.606 -3.3538E-13     -3.0817
-1.1452E-14     -0.1287      6.3303  3.1594E+07  9.1843E+06
     x(FT)      0.0000      0.0000      3.8000      2.2800      0.0000      0.0000
   2.2800      0.7600      46.360      0.0000      0.0000
        9  -6.9123E-16   -0.010581 -7.5141E-12     -53.606 -3.3538E-13     -3.0817
-1.1452E-14     -0.1287      6.3303  3.1594E+07  9.1843E+06
     x(FT)      0.0000      0.0000      3.8000      2.2800      0.0000      0.0000
   2.2800      0.7600      0.0000      0.0000      0.0000
```

```
       10  -6.9123E-16   -0.010581 -7.5141E-12     -53.606 -3.3538E-13     -3.0817
-1.1452E-14     -0.1287      6.3303  3.1594E+07  9.1843E+06
     x(FT)      0.0000      0.0000      3.8000      2.2800      0.0000      0.0000
   2.2800      0.7600      0.0000      0.0000      0.0000
       11    -0.012226 -2.1993E-15     -97.301 -3.8410E-12     -4.1024 -1.0195E-12
  -0.1208 -1.4380E-14      5.9512  3.1594E+07  9.1843E+06
     x(FT)      0.0000      7.6000      3.8000      14.440      0.0000      4.5600
   3.0400      5.3200      0.0000      0.0000      0.0000
       12    -0.012226 -2.1993E-15     -97.301 -3.8410E-12     -4.1024 -1.0195E-12
  -0.1208 -1.4380E-14      5.9512  3.1594E+07  9.1843E+06
     x(FT)      0.0000      7.6000      3.8000      14.440      0.0000      4.5600
   3.0400      5.3200      0.0000      0.0000      0.0000
       13    -0.012226 -2.1993E-15     -97.301 -3.8410E-12     -4.1024 -1.0195E-12
  -0.1208 -1.4380E-14      5.9512  3.1594E+07  9.1843E+06
     x(FT)      0.0000      7.6000      3.8000      14.440      0.0000      4.5600
   3.0400      5.3200      0.0000      0.0000      0.0000
       14    -0.012226 -2.1993E-15     -97.301 -3.8410E-12     -4.1024 -1.0195E-12
  -0.1208 -1.4380E-14      5.9512  3.1594E+07  9.1843E+06
     x(FT)      0.0000      7.6000      3.8000      14.440      0.0000      4.5600
   3.0400      5.3200      0.0000      0.0000      0.0000
       15    -0.012226 -2.1993E-15     -97.301 -3.8410E-12     -4.1024 -1.0195E-12
  -0.1208 -1.4380E-14      5.9512  3.1594E+07  9.1843E+06
     x(FT)      0.0000      7.6000      3.8000      14.440      0.0000      4.5600
   3.0400      5.3200      0.0000      0.0000      0.0000

      Min.   -0.012226   -0.010581     -97.301     -53.606     -4.1024     -3.0817
  -0.1208     -0.1287      5.9512  3.1594E+07  9.1843E+06
   Pile N.      11           6          11           6          11           6
   11           6          11           1           1

      * MAXIMUM VALUES AND LOCATIONS *

     PILE     DISPL.      DISPL.      MOMENT      MOMENT       SHEAR       SHEAR
SOIL REACT  SOIL REACT     TOTAL    FLEX. RIG.  FLEX. RIG.
               y-DIR       z-DIR       z-DIR       y-DIR       y-DIR       z-DIR
  y-DIR       z-DIR      STRESS       z-DIR       y-DIR
               IN          IN        KIP-IN      KIP-IN        KIP         KIP
 KIP/IN      KIP/IN     KIP/IN**2   KIP-IN**2   KIP-IN**2
    ******  **********  **********  **********  **********  **********  **********
**********  **********  **********  **********  **********
        1     0.037708  2.4945E-15      249.20  3.9714E-12      9.5185  8.0831E-13
   0.2757  8.0769E-15      8.4542  3.1594E+07  9.1843E+06
     x(FT)      0.0000      8.3600      3.8000      15.960      0.0000      5.3200
   3.0400      7.6000      3.8000      0.0000      0.0000
        2     0.037708  2.4945E-15      249.20  3.9714E-12      9.5185  8.0831E-13
   0.2757  8.0769E-15      8.4542  3.1594E+07  9.1843E+06
     x(FT)      0.0000      8.3600      3.8000      15.960      0.0000      5.3200
   3.0400      7.6000      3.8000      0.0000      0.0000
        3     0.037708  2.4945E-15      249.20  3.9714E-12      9.5185  8.0831E-13
   0.2757  8.0769E-15      8.4542  3.1594E+07  9.1843E+06
```

```
     x(FT)      0.0000      8.3600      3.8000      15.960      0.0000      5.3200
   3.0400      7.6000      3.8000      0.0000      0.0000
        4     0.037708  2.4945E-15      249.20  3.9714E-12      9.5185  8.0831E-13
   0.2757  8.0769E-15      8.4542  3.1594E+07  9.1843E+06
     x(FT)      0.0000      8.3600      3.8000      15.960      0.0000      5.3200
   3.0400      7.6000      3.8000      0.0000      0.0000
        5     0.037708  2.4945E-15      249.20  3.9714E-12      9.5185  8.0831E-13
   0.2757  8.0769E-15      8.4542  3.1594E+07  9.1843E+06
     x(FT)      0.0000      8.3600      3.8000      15.960      0.0000      5.3200
   3.0400      7.6000      3.8000      0.0000      0.0000
        6   1.1144E-16  1.5657E-03  8.7507E-13      3.8567  9.7376E-14      0.9190
1.7834E-15    0.025019      7.4643  3.1594E+07  9.1843E+06
     x(FT)      8.3600      6.8400      15.200      12.920      5.3200      3.8000
   15.200      4.5600      2.2800      0.0000      0.0000
        7   1.1144E-16  1.5657E-03  8.7507E-13      3.8567  9.7376E-14      0.9190
1.7834E-15    0.025019      7.4643  3.1594E+07  9.1843E+06
     x(FT)      8.3600      6.8400      15.200      12.920      5.3200      3.8000
   15.200      4.5600      2.2800      0.0000      0.0000
        8   1.1144E-16  1.5657E-03  8.7507E-13      3.8567  9.7376E-14      0.9190
1.7834E-15    0.025019      7.4643  3.1594E+07  9.1843E+06
     x(FT)      8.3600      6.8400      15.200      12.920      5.3200      3.8000
   15.200      4.5600      2.2800      0.0000      0.0000
        9   1.1144E-16  1.5657E-03  8.7507E-13      3.8567  9.7376E-14      0.9190
1.7834E-15    0.025019      7.4643  3.1594E+07  9.1843E+06
     x(FT)      8.3600      6.8400      15.200      12.920      5.3200      3.8000
   15.200      4.5600      2.2800      0.0000      0.0000
       10   1.1144E-16  1.5657E-03  8.7507E-13      3.8567  9.7376E-14      0.9190
1.7834E-15    0.025019      7.4643  3.1594E+07  9.1843E+06
     x(FT)      8.3600      6.8400      15.200      12.920      5.3200      3.8000
   15.200      4.5600      2.2800      0.0000      0.0000
       11   1.8004E-03  1.6123E-14      8.4906  6.3516E-11      1.0997  3.3818E-12
8.8183E-03  1.2900E-13      6.5496  3.1594E+07  9.1843E+06
     x(FT)      9.8800      0.0000      18.240      3.0400      6.0800      0.0000
   11.400      0.7600      3.8000      0.0000      0.0000
       12   1.8004E-03  1.6123E-14      8.4906  6.3516E-11      1.0997  3.3818E-12
8.8183E-03  1.2900E-13      6.5496  3.1594E+07  9.1843E+06
     x(FT)      9.8800      0.0000      18.240      3.0400      6.0800      0.0000
   11.400      0.7600      3.8000      0.0000      0.0000
       13   1.8004E-03  1.6123E-14      8.4906  6.3516E-11      1.0997  3.3818E-12
8.8183E-03  1.2900E-13      6.5496  3.1594E+07  9.1843E+06
     x(FT)      9.8800      0.0000      18.240      3.0400      6.0800      0.0000
   11.400      0.7600      3.8000      0.0000      0.0000
       14   1.8004E-03  1.6123E-14      8.4906  6.3516E-11      1.0997  3.3818E-12
8.8183E-03  1.2900E-13      6.5496  3.1594E+07  9.1843E+06
     x(FT)      9.8800      0.0000      18.240      3.0400      6.0800      0.0000
   11.400      0.7600      3.8000      0.0000      0.0000
       15   1.8004E-03  1.6123E-14      8.4906  6.3516E-11      1.0997  3.3818E-12
8.8183E-03  1.2900E-13      6.5496  3.1594E+07  9.1843E+06
     x(FT)      9.8800      0.0000      18.240      3.0400      6.0800      0.0000
   11.400      0.7600      3.8000      0.0000      0.0000
```

```
   Max.    0.037708  1.5657E-03      249.20      3.8567      9.5185      0.9190
0.2757    0.025019      8.4542  3.1594E+07  9.1843E+06
Pile N.       1           6           1           6           1           6
 1           6           1           1           1


  LOAD CASE :    11
  CASE NAME : STR V-L1

  LOAD TYPE : Dead, DL

    REDUCTION FACTORS FOR CLOSELY-SPACED PILE GROUPS, COMBINED Y AND Z DIRECTIONS
    ESTIMATED USING MOVEMENT IN THE DIRECTION OF PILE CAP DISPLACEMENTS

         GROUP NO     P-FACTOR     Y-FACTOR

             1           0.8605       1.0000
             2           0.8605       1.0000
             3           0.8605       1.0000
             4           0.8643       1.0000
             5           0.8649       1.0000
             6           0.7270       1.0000
             7           0.7270       1.0000
             8           0.7270       1.0000
             9           0.7315       1.0000
            10           0.7322       1.0000
            11           0.5949       1.0000
            12           0.5949       1.0000
            13           0.5949       1.0000
            14           0.6004       1.0000
            15           0.6013       1.0000


  * TABLE L *   COMPUTATION ON PILE CAP


  * EQUIVALENT CONCENTRATED LOAD AT ORIGIN *


       VERT. LOAD,KIPS    HOR. LOAD Y,KIPS   HOR. LOAD Z,KIPS
             2577.77            44.6400           -32.9700

      MOMENT X ,KIP-IN    MOMENT Y,KIP-IN    MOMENT Z,KIP-IN
             0.00000            50000.7            10259.6


  * DISPLACEMENT OF GROUPED PILE FOUNDATION AT ORIGIN *
```

VERTICAL ,IN	HORIZONTAL Y,IN	HORIZONTAL Z,IN
0.14441	0.0177850	-6.68251E-03

ANGLE ROT. X,RAD	ANGLE ROT. Y,RAD	ANGLE ROT. Z,RAD
-4.61046E-06	1.87476E-04	2.98851E-04

* PASSIVE RESISTANCE IN PILE CAP *

HOR. LOAD Y,KIP	HOR. LOAD Z,KIP	POSITION, FT	EQ. DIAM, FT
6.52242	1.25779	-1.55556	35.1141

THE GLOBAL STRUCTURAL COORDINATE SYSTEM
---

* PILE TOP DISPLACEMENTS *

PILE GROUP	DISP. X,IN	DISP. Y,IN	DISP. Z,IN	ROT. X,RAD	ROT. Y,RAD	ROT. Z,RAD
**********	**********	**********	**********	**********	**********	**********
1	0.1286	0.016955	-6.4059E-03	-4.6105E-06	1.8748E-04	2.9885E-04
2	0.1455	0.017370	-6.4059E-03	-4.6105E-06	1.8748E-04	2.9885E-04
3	0.1623	0.017785	-6.4059E-03	-4.6105E-06	1.8748E-04	2.9885E-04
4	0.1792	0.018200	-6.4059E-03	-4.6105E-06	1.8748E-04	2.9885E-04
5	0.1961	0.018615	-6.4059E-03	-4.6105E-06	1.8748E-04	2.9885E-04
6	0.1107	0.016955	-6.6825E-03	-4.6105E-06	1.8748E-04	2.9885E-04
7	0.1275	0.017370	-6.6825E-03	-4.6105E-06	1.8748E-04	2.9885E-04
8	0.1444	0.017785	-6.6825E-03	-4.6105E-06	1.8748E-04	2.9885E-04
9	0.1613	0.018200	-6.6825E-03	-4.6105E-06	1.8748E-04	2.9885E-04
10	0.1782	0.018615	-6.6825E-03	-4.6105E-06	1.8748E-04	2.9885E-04
11	0.092734	0.016955	-6.9591E-03	-4.6105E-06	1.8748E-04	2.9885E-04
12	0.1096	0.017370	-6.9591E-03	-4.6105E-06	1.8748E-04	2.9885E-04
13	0.1265	0.017785	-6.9591E-03	-4.6105E-06	1.8748E-04	2.9885E-04

```
         14            0.1434     0.018200  -6.9591E-03  -4.6105E-06   1.8748E-04
2.9885E-04
         15            0.1602     0.018615  -6.9591E-03  -4.6105E-06   1.8748E-04
2.9885E-04

       MINIMUM       0.092734     0.016955  -6.9591E-03  -4.6105E-06   1.8748E-04
2.9885E-04
       Pile N.         11            1           11            1            1
    1
       MAXIMUM         0.1961     0.018615  -6.4059E-03  -4.6105E-06   1.8748E-04
2.9885E-04
       Pile N.          5            5            1            1            1
    1

       * PILE TOP REACTIONS *

      PILE GROUP   FOR. X,KIP   FOR. Y,KIP   FOR. Z,KIP MOM X,KIP-IN MOM Y,KIP-IN
MOM Z,KIP-IN
      **********  ***********  ***********  ***********  ***********  ***********
***********
          1            152.19      -15.043      -1.1176       0.0000       0.0000
   0.0000
          2            170.88      -17.707      -1.0746       0.0000       0.0000
   0.0000
          3            189.56      -20.390      -1.0359       0.0000       0.0000
   0.0000
          4            208.25      -23.056      -1.0039       0.0000       0.0000
   0.0000
          5            226.93      -25.763      -0.9723       0.0000       0.0000
   0.0000
          6            134.97       4.0925      -2.4756       0.0000  -3.2947E-13
2.0174E-29
          7            152.98       4.1499      -2.4541   1.1729E-29  -1.1729E-29
-1.9155E-13
          8            170.98       4.2062      -2.4331   1.1729E-29  -1.1729E-29
-1.9155E-13
          9            188.99       4.2791      -2.4225       0.0000  -3.2947E-13
2.0174E-29
         10            207.00       4.3362      -2.4038  -1.1729E-29   1.1729E-29
1.9155E-13
         11            116.97       20.313      -2.3183       0.0000       0.0000
   0.0000
         12            135.97       22.158      -2.3431  -1.5742E-14   9.4474E-14
-4.1183E-14
         13            154.93       24.152      -2.1853   1.5742E-14  -9.4474E-14
   0.0000
         14            173.86       26.393      -1.9926  -1.5742E-14   9.4474E-14
   0.0000
         15            192.76       28.826      -1.8073       0.0000       0.0000
   0.0000
```

```
       MINIMUM         116.97      -25.763      -2.4756  -1.5742E-14  -3.2947E-13
-1.9155E-13
       Pile N.         11            5            6           12            6
    7
       MAXIMUM         226.93       28.826      -0.9723   1.5742E-14   9.4474E-14
1.9155E-13
       Pile N.          5           15            5           13           12
   10


       THE PILE COORDINATE SYSTEM (LOCAL AXES)
       ---------------------------------------

       * PILE TOP DISPLACEMENTS *

      PILE GROUP   DISP. x,IN   DISP. y,IN   DISP. z,IN   ROT. x,RAD   ROT. y,RAD
ROT. z,RAD
      **********  ***********  ***********  ***********  ***********  ***********
***********
          1            0.1241     0.037860  -6.4059E-03  -3.5361E-05   1.8417E-04
2.9885E-04
          2            0.1406     0.041043  -6.4059E-03  -3.5361E-05   1.8417E-04
2.9885E-04
          3            0.1572     0.044226  -6.4059E-03  -3.5361E-05   1.8417E-04
2.9885E-04
          4            0.1738     0.047408  -6.4059E-03  -3.5361E-05   1.8417E-04
2.9885E-04
          5            0.1904     0.050590  -6.4059E-03  -3.5361E-05   1.8417E-04
2.9885E-04
          6            0.1107  -6.6825E-03    -0.016955  -4.6105E-06   2.9885E-04
-1.8748E-04
          7            0.1275  -6.6825E-03    -0.017370  -4.6105E-06   2.9885E-04
-1.8748E-04
          8            0.1444  -6.6825E-03    -0.017785  -4.6105E-06   2.9885E-04
-1.8748E-04
          9            0.1613  -6.6825E-03    -0.018200  -4.6105E-06   2.9885E-04
-1.8748E-04
         10            0.1782  -6.6825E-03    -0.018615  -4.6105E-06   2.9885E-04
-1.8748E-04
         11          0.094260   1.4829E-03  -6.9591E-03   2.6266E-05   1.8568E-04
2.9885E-04
         12            0.1110  -8.8102E-04  -6.9591E-03   2.6266E-05   1.8568E-04
2.9885E-04
         13            0.1277  -3.2449E-03  -6.9591E-03   2.6266E-05   1.8568E-04
2.9885E-04
         14            0.1444  -5.6088E-03  -6.9591E-03   2.6266E-05   1.8568E-04
2.9885E-04
         15            0.1611  -7.9727E-03  -6.9591E-03   2.6266E-05   1.8568E-04
2.9885E-04
```

```
      MINIMUM       0.094260  -7.9727E-03    -0.018615  -3.5361E-05   1.8417E-04
-1.8748E-04
      Pile N.         11           15           10            1            1
    6
      MAXIMUM         0.1904     0.050590  -6.4059E-03   2.6266E-05   2.9885E-04
2.9885E-04
      Pile N.          5            5            1           11            6
    1

      * PILE TOP REACTIONS *

     PILE GROUP   AXIAL,KIP    LAT. y,KIP   LAT. z,KIP MOM x,KIP-IN MOM y,KIP-IN
MOM z,KIP-IN
     **********  ***********  ***********  ***********  ***********  ***********
***********
         1            152.59       10.175      -1.1176       0.0000       0.0000
   0.0000
         2            171.46       10.618      -1.0746       0.0000       0.0000
   0.0000
         3            190.33       11.043      -1.0359       0.0000       0.0000
   0.0000
         4            209.21       11.486      -1.0039       0.0000       0.0000
   0.0000
         5            228.08       11.886      -0.9723       0.0000       0.0000
   0.0000
         6            134.97      -2.4756      -4.0925       0.0000       0.0000
3.2947E-13
         7            152.98      -2.4541      -4.1499       0.0000  -1.9155E-13
   0.0000
         8            170.98      -2.4331      -4.2062       0.0000  -1.9155E-13
   0.0000
         9            188.99      -2.4225      -4.2791       0.0000       0.0000
3.2947E-13
        10            207.00      -2.4038      -4.3362       0.0000   1.9155E-13
   0.0000
        11            118.72       0.8108      -2.3183       0.0000       0.0000
   0.0000
        12            137.76      -0.4904      -2.3431       0.0000   9.5776E-14
-4.1183E-14
        13            156.80      -1.6416      -2.1853       0.0000  -9.5776E-14
   0.0000
        14            175.84      -2.5417      -1.9926       0.0000   9.5776E-14
   0.0000
        15            194.87      -3.2470      -1.8073       0.0000       0.0000
   0.0000

      MINIMUM         118.72      -3.2470      -4.3362       0.0000  -1.9155E-13
-4.1183E-14
      Pile N.         11           15           10            1            7
```

```
   12
       MAXIMUM         228.08       11.886      -0.9723       0.0000   1.9155E-13
3.2947E-13
       Pile N.          5            5            5            1           10
    6

      PILE GROUP   STRESS,KIP/IN**2
      **********  ****************
          1            5.3967
          2            6.0642
          3            6.7317
          4            7.3992
          5            8.0667
          6            4.7735
          7            5.4104
          8            6.0473
          9            6.6843
         10            7.3212
         11            4.1989
         12            4.8722
         13            5.5456
         14            6.2189
         15            6.8922

       MINIMUM         4.1989
       Pile N.         11
       MAXIMUM         8.0667
       Pile N.          5

       * EFFECTS FOR LATERALLY LOADED PILE *

       * MINIMUM VALUES AND LOCATIONS *

     PILE     DISPL.      DISPL.      MOMENT      MOMENT       SHEAR       SHEAR
SOIL REACT  SOIL REACT     TOTAL    FLEX. RIG.  FLEX. RIG.
               y-DIR       z-DIR       z-DIR       y-DIR       y-DIR       z-DIR
  y-DIR       z-DIR      STRESS       z-DIR       y-DIR
               IN          IN        KIP-IN      KIP-IN        KIP         KIP
 KIP/IN      KIP/IN     KIP/IN**2   KIP-IN**2   KIP-IN**2
    ******  **********  **********  **********  **********  **********  **********
**********  **********  **********  **********  **********
        1  -4.7941E-03 -6.4059E-03     -23.341     -21.008     -2.4522     -1.0044
-0.020755   -0.033052      5.3967  3.1594E+07  9.1843E+06
     x(FT)      10.640      0.0000      19.760      3.0400      6.8400      0.0000
   19.760      0.7600      0.0000      0.0000      0.0000
        2  -5.1084E-03 -6.4059E-03     -25.180     -20.500     -2.5594     -0.9650
-0.023128   -0.031249      6.0642  3.1594E+07  9.1843E+06
     x(FT)      10.640      0.0000      19.760      3.0400      6.8400      0.0000
   19.760      0.7600      0.0000      0.0000      0.0000
        3  -5.4290E-03 -6.4059E-03     -26.944     -20.039     -2.6615     -0.9296
```

```
-0.025789   -0.029754      6.7317  3.1594E+07  9.1843E+06
     x(FT)      11.400      0.0000      19.760      3.0400      6.8400      0.0000
   20.520      1.5200      0.0000      0.0000      0.0000
        4  -5.7564E-03 -6.4059E-03     -28.666     -19.654     -2.7682     -0.9002
-0.028680   -0.028553      7.3992  3.1594E+07  9.1843E+06
     x(FT)      11.400      0.0000      19.760      3.0400      6.8400      0.0000
   20.520      1.5200      0.0000      0.0000      0.0000
        5  -6.0670E-03 -6.4059E-03     -30.296     -19.271     -2.8638     -0.8712
-0.031588   -0.027385      8.0667  3.1594E+07  9.1843E+06
     x(FT)      11.400      0.0000      19.760      3.0400      6.8400      0.0000
   20.520      1.5200      0.0000      0.0000      0.0000
        6  -6.6825E-03   -0.016955     -53.168     -68.365     -2.3392     -3.7466
-0.081972     -0.1475      4.7735  3.1594E+07  9.1843E+06
     x(FT)      0.0000      0.0000      3.8000      2.2800      0.0000      0.0000
   2.2800      2.2800      58.520      0.0000      0.0000
        7  -6.6825E-03   -0.017370     -52.983     -69.658     -2.3190     -3.7986
-0.081190     -0.1498      5.4104  3.1594E+07  9.1843E+06
     x(FT)      0.0000      0.0000      3.8000      2.2800      0.0000      0.0000
   2.2800      2.2800      58.520      0.0000      0.0000
        8  -6.6825E-03   -0.017785     -52.800     -70.940     -2.2991     -3.8496
-0.080423     -0.1520      6.0473  3.1594E+07  9.1843E+06
     x(FT)      0.0000      0.0000      3.8000      2.2800      0.0000      0.0000
   2.2800      2.2800      58.520      0.0000      0.0000
        9  -6.6825E-03   -0.018200     -52.762     -72.431     -2.2889     -3.9150
-0.080049     -0.1548      6.6843  3.1594E+07  9.1843E+06
     x(FT)      0.0000      0.0000      3.8000      2.2800      0.0000      0.0000
   2.2800      2.2800      58.520      0.0000      0.0000
       10  -6.6825E-03   -0.018615     -52.604     -73.731     -2.2711     -3.9666
-0.079364     -0.1570      7.3212  3.1594E+07  9.1843E+06
     x(FT)      0.0000      0.0000      3.8000      2.2800      0.0000      0.0000
   2.2800      2.2800      58.520      0.0000      0.0000
       11  -2.5818E-04 -6.9591E-03     -1.5971     -37.722     -0.2210     -2.1461
-2.1680E-03   -0.087173      4.1989  3.1594E+07  9.1843E+06
     x(FT)      8.3600      0.0000      15.200      2.2800      4.5600      0.0000
   12.160      0.7600      0.0000      0.0000      0.0000
       12  -8.8102E-04 -6.9591E-03     -10.750     -38.240     -0.4685     -2.1699
-0.020475   -0.088110      4.8722  3.1594E+07  9.1843E+06
     x(FT)      0.0000      0.0000      3.0400      2.2800      0.0000      0.0000
   3.0400      0.7600      52.440      0.0000      0.0000
       13  -3.2449E-03 -6.9591E-03     -35.369     -35.673     -1.5638     -2.0184
-0.058700   -0.082200      5.5456  3.1594E+07  9.1843E+06
     x(FT)      0.0000      0.0000      3.0400      2.2800      0.0000      0.0000
   3.0400      0.7600      57.760      0.0000      0.0000
       14  -5.6088E-03 -6.9591E-03     -54.902     -32.839     -2.4143     -1.8346
-0.082985   -0.073759      6.2189  3.1594E+07  9.1843E+06
     x(FT)      0.0000      0.0000      3.0400      2.2800      0.0000      0.0000
   3.0400      0.7600      59.280      0.0000      0.0000
       15  -7.9727E-03 -6.9591E-03     -71.177     -30.288     -3.0781     -1.6599
  -0.1013   -0.065004      6.8922  3.1594E+07  9.1843E+06
     x(FT)      0.0000      0.0000      3.0400      2.2800      0.0000      0.0000
```

```
   3.0400      0.7600      0.0000      0.0000      0.0000

      Min. -7.9727E-03   -0.018615     -71.177     -73.731     -3.0781     -3.9666
  -0.1013     -0.1570      4.1989  3.1594E+07  9.1843E+06
   Pile N.      15          10          15          10          15          10
   15          10          11          1           1

       * MAXIMUM VALUES AND LOCATIONS *

     PILE     DISPL.      DISPL.      MOMENT      MOMENT       SHEAR       SHEAR
SOIL REACT  SOIL REACT     TOTAL    FLEX. RIG.  FLEX. RIG.
               y-DIR       z-DIR       z-DIR       y-DIR       y-DIR       z-DIR
  y-DIR       z-DIR      STRESS       z-DIR       y-DIR
                IN          IN        KIP-IN      KIP-IN        KIP         KIP
 KIP/IN      KIP/IN     KIP/IN**2   KIP-IN**2   KIP-IN**2
    ******  **********  **********  **********  **********  **********  **********
**********  **********  **********  **********  **********
        1    0.037860  9.1010E-04      247.55      1.4470      9.5059      0.2913
   0.2784  2.9099E-03      6.9751  3.1594E+07  9.1843E+06
     x(FT)      0.0000      8.3600      3.8000      15.960      0.0000      5.3200
   3.0400      8.3600      3.8000      0.0000      0.0000
        2    0.041043  9.1413E-04      261.64      1.4423      9.9164      0.2821
   0.2892  2.7705E-03      7.7244  3.1594E+07  9.1843E+06
     x(FT)      0.0000      8.3600      3.8000      15.960      0.0000      5.3200
   3.0400      8.3600      3.8000      0.0000      0.0000
        3    0.044225  9.1730E-04      275.32      1.4349      10.310      0.2737
   0.2995  2.6451E-03      8.4720  3.1594E+07  9.1843E+06
     x(FT)      0.0000      8.3600      3.8000      15.960      0.0000      5.3200
   3.0400      8.3600      3.8000      0.0000      0.0000
        4    0.047408  9.2064E-04      289.23      1.4269      10.718      0.2669
   0.3103  2.5428E-03      9.2215  3.1594E+07  9.1843E+06
     x(FT)      0.0000      9.1200      3.8000      15.960      0.0000      5.3200
   3.0400      8.3600      3.8000      0.0000      0.0000
        5    0.050590  9.2722E-04      302.33      1.4165      11.087      0.2600
   0.3199  2.4437E-03      9.9665  3.1594E+07  9.1843E+06
     x(FT)      0.0000      9.1200      3.8000      15.960      0.0000      5.3200
   3.0400      9.1200      3.8000      0.0000      0.0000
        6   7.7514E-04  2.3712E-03      4.1951      4.9611      0.5827      1.0208
6.0145E-03    0.011033      6.2505  3.1594E+07  9.1843E+06
     x(FT)      9.8800      7.6000      16.720      13.680      6.0800      4.5600
   13.680      8.3600      2.2800      0.0000      0.0000
        7   7.7427E-04  2.4422E-03      4.1876      5.1034      0.5790      1.0397
6.0085E-03    0.011198      6.9139  3.1594E+07  9.1843E+06
     x(FT)      9.8800      7.6000      16.720      13.680      6.0800      4.5600
   13.680      8.3600      2.2800      0.0000      0.0000
        8   7.7336E-04  2.5137E-03      4.1798      5.2461      0.5754      1.0585
6.0020E-03    0.011367      7.5771  3.1594E+07  9.1843E+06
     x(FT)      9.8800      7.6000      16.720      13.680      6.0800      4.5600
   13.680      9.1200      2.2800      0.0000      0.0000
        9   7.7402E-04  2.5851E-03      4.1894      5.3990      0.5745      1.0820
```

```
6.0204E-03    0.011600      8.2449  3.1594E+07  9.1843E+06
     x(FT)      9.8800      7.6000      16.720      13.680      6.0800      4.5600
   13.680      9.1200      2.2800      0.0000      0.0000
       10   7.7334E-04  2.6574E-03      4.1839      5.5444      0.5714      1.1014
6.0170E-03    0.011788      8.9086  3.1594E+07  9.1843E+06
     x(FT)      9.8800      7.6000      16.720      13.680      6.0800      4.5600
   13.680      9.1200      2.2800      0.0000      0.0000
       11   1.4829E-03  1.1108E-03      17.650      2.5998      0.7741      0.7622
 0.032476    0.021476      5.0031  3.1594E+07  9.1843E+06
     x(FT)      0.0000      6.8400      3.0400      12.920      0.0000      3.8000
   3.0400      4.5600      2.2800      0.0000      0.0000
       12   1.5616E-04  1.1200E-03      1.0336      2.6741      0.1366      0.7873
1.3460E-03    0.022312      5.6835  3.1594E+07  9.1843E+06
     x(FT)      8.3600      6.8400      15.200      12.920      4.5600      3.8000
   13.680      4.5600      2.2800      0.0000      0.0000
       13   5.2877E-04  1.0869E-03      2.8975      2.3776      0.4271      0.6805
4.1301E-03    0.018126      6.3262  3.1594E+07  9.1843E+06
     x(FT)      8.3600      6.8400      15.960      12.920      5.3200      3.8000
   11.400      4.5600      2.2800      0.0000      0.0000
       14   8.5914E-04  1.0461E-03      4.3438      2.1092      0.6430      0.5817
5.9059E-03    0.013361      6.9803  3.1594E+07  9.1843E+06
     x(FT)      9.1200      6.8400      16.720      13.680      5.3200      3.8000
   11.400      4.5600      3.0400      0.0000      0.0000
       15   1.1647E-03  1.0332E-03      5.6990      1.9527      0.8068      0.4982
7.0904E-03  9.0004E-03      7.6668  3.1594E+07  9.1843E+06
     x(FT)      9.1200      7.6000      17.480      13.680      5.3200      3.8000
   11.400      4.5600      3.0400      0.0000      0.0000

      Max.    0.050590  2.6574E-03      302.33      5.5444      11.087      1.1014
   0.3199    0.022312      9.9665  3.1594E+07  9.1843E+06
   Pile N.       5          10           5          10           5          10
    5          12           5           1           1


     LOAD CASE :    12
     CASE NAME : STR V-L2

     LOAD TYPE : Dead, DL

       REDUCTION FACTORS FOR CLOSELY-SPACED PILE GROUPS, COMBINED Y AND Z DIRECTIONS
       ESTIMATED USING MOVEMENT IN THE DIRECTION OF PILE CAP DISPLACEMENTS

            GROUP NO     P-FACTOR     Y-FACTOR

                1           0.8604       1.0000
                2           0.8604       1.0000
                3           0.8604       1.0000
                4           0.8641       1.0000
                5           0.8646       1.0000
```

6	0.7267	1.0000
7	0.7267	1.0000
8	0.7267	1.0000
9	0.7310	1.0000
10	0.7316	1.0000
11	0.5942	1.0000
12	0.5942	1.0000
13	0.5942	1.0000
14	0.5994	1.0000
15	0.6002	1.0000

* TABLE L * COMPUTATION ON PILE CAP

* EQUIVALENT CONCENTRATED LOAD AT ORIGIN *

VERT. LOAD,KIPS	HOR. LOAD Y,KIPS	HOR. LOAD Z,KIPS
2774.08	44.6400	-32.9700

MOMENT X ,KIP-IN	MOMENT Y,KIP-IN	MOMENT Z,KIP-IN
0.00000	40577.8	10259.6

* DISPLACEMENT OF GROUPED PILE FOUNDATION AT ORIGIN *

VERTICAL ,IN	HORIZONTAL Y,IN	HORIZONTAL Z,IN
0.15632	0.0185770	-6.97586E-03

ANGLE ROT. X,RAD	ANGLE ROT. Y,RAD	ANGLE ROT. Z,RAD
-1.79585E-06	1.52271E-04	3.01435E-04

* PASSIVE RESISTANCE IN PILE CAP *

HOR. LOAD Y,KIP	HOR. LOAD Z,KIP	POSITION, FT	EQ. DIAM, FT
6.98461	1.30785	-1.55556	35.1141

THE GLOBAL STRUCTURAL COORDINATE SYSTEM
---

* PILE TOP DISPLACEMENTS *

PILE GROUP	DISP. X,IN	DISP. Y,IN	DISP. Z,IN	ROT. X,RAD	ROT. Y,RAD	ROT. Z,RAD
**********	**********	**********	**********	**********	**********	

```
***********
          1            0.1470     0.018254  -6.8681E-03  -1.7958E-06   1.5227E-04
3.0144E-04
          2            0.1607     0.018415  -6.8681E-03  -1.7958E-06   1.5227E-04
3.0144E-04
          3            0.1744     0.018577  -6.8681E-03  -1.7958E-06   1.5227E-04
3.0144E-04
          4            0.1881     0.018739  -6.8681E-03  -1.7958E-06   1.5227E-04
3.0144E-04
          5            0.2018     0.018900  -6.8681E-03  -1.7958E-06   1.5227E-04
3.0144E-04
          6            0.1289     0.018254  -6.9759E-03  -1.7958E-06   1.5227E-04
3.0144E-04
          7            0.1426     0.018415  -6.9759E-03  -1.7958E-06   1.5227E-04
3.0144E-04
          8            0.1563     0.018577  -6.9759E-03  -1.7958E-06   1.5227E-04
3.0144E-04
          9            0.1700     0.018739  -6.9759E-03  -1.7958E-06   1.5227E-04
3.0144E-04
         10            0.1837     0.018900  -6.9759E-03  -1.7958E-06   1.5227E-04
3.0144E-04
         11            0.1108     0.018254  -7.0836E-03  -1.7958E-06   1.5227E-04
3.0144E-04
         12            0.1245     0.018415  -7.0836E-03  -1.7958E-06   1.5227E-04
3.0144E-04
         13            0.1382     0.018577  -7.0836E-03  -1.7958E-06   1.5227E-04
3.0144E-04
         14            0.1519     0.018739  -7.0836E-03  -1.7958E-06   1.5227E-04
3.0144E-04
         15            0.1656     0.018900  -7.0836E-03  -1.7958E-06   1.5227E-04
3.0144E-04

       MINIMUM         0.1108     0.018254  -7.0836E-03  -1.7958E-06   1.5227E-04
3.0144E-04
       Pile N.         11            1           11            1            1
    1
       MAXIMUM         0.2018     0.018900  -6.8681E-03  -1.7958E-06   1.5227E-04
3.0144E-04
       Pile N.          5            5            1            1            1
    1

       * PILE TOP REACTIONS *

      PILE GROUP   FOR. X,KIP   FOR. Y,KIP   FOR. Z,KIP MOM X,KIP-IN MOM Y,KIP-IN
MOM Z,KIP-IN
      **********  ***********  ***********  ***********  ***********  ***********
***********
          1            172.43      -17.818      -1.1371       0.0000       0.0000
   0.0000
          2            187.64      -20.029      -1.1063       0.0000       0.0000
```

```
   0.0000
          3            202.84      -22.248      -1.0777       0.0000       0.0000
   0.0000
          4            218.05      -24.444      -1.0541   1.5742E-14   9.4474E-14
   0.0000
          5            233.25      -26.674      -1.0295  -1.5742E-14  -9.4474E-14
   0.0000
          6            154.44       4.2618      -2.5030       0.0000       0.0000
   0.0000
          7            169.07       4.2805      -2.4943   1.1729E-29  -3.2947E-13
-1.9155E-13
          8            183.70       4.2990      -2.4857   1.1729E-29  -1.1729E-29
-1.9155E-13
          9            198.33       4.3342      -2.4869       0.0000  -3.2947E-13
2.0174E-29
         10            212.95       4.3549      -2.4798   1.1729E-29   3.2947E-13
-1.9155E-13
         11            137.42       22.779      -2.3804       0.0000       0.0000
1.0296E-14
         12            152.82       24.238      -2.2830   1.5742E-14  -9.4474E-14
   0.0000
         13            168.19       25.904      -2.1103  -1.5742E-14   9.4474E-14
-1.6473E-13
         14            183.53       27.732      -1.9446  -1.5742E-14   9.4474E-14
   0.0000
         15            198.84       29.689      -1.7892   1.5742E-14  -9.4474E-14
3.2947E-13

       MINIMUM         137.42      -26.674      -2.5030  -1.5742E-14  -3.2947E-13
-1.9155E-13
       Pile N.         11            5            6            5            7
    7
       MAXIMUM         233.25       29.689      -1.0295   1.5742E-14   3.2947E-13
3.2947E-13
       Pile N.          5           15            5            4           10
   15


       THE PILE COORDINATE SYSTEM (LOCAL AXES)
       ---------------------------------------

       * PILE TOP DISPLACEMENTS *

      PILE GROUP   DISP. x,IN   DISP. y,IN   DISP. z,IN   ROT. x,RAD   ROT. y,RAD
ROT. z,RAD
      **********  ***********  ***********  ***********  ***********  ***********
***********
          1            0.1420     0.042166  -6.8681E-03  -2.6799E-05   1.4991E-04
3.0144E-04
          2            0.1555     0.044578  -6.8681E-03  -2.6799E-05   1.4991E-04
```

```
3.0144E-04
          3            0.1690     0.046990  -6.8681E-03  -2.6799E-05   1.4991E-04
3.0144E-04
          4            0.1825     0.049402  -6.8681E-03  -2.6799E-05   1.4991E-04
3.0144E-04
          5            0.1960     0.051814  -6.8681E-03  -2.6799E-05   1.4991E-04
3.0144E-04
          6            0.1289  -6.9759E-03    -0.018254  -1.7958E-06   3.0144E-04
-1.5227E-04
          7            0.1426  -6.9759E-03    -0.018415  -1.7958E-06   3.0144E-04
-1.5227E-04
          8            0.1563  -6.9759E-03    -0.018577  -1.7958E-06   3.0144E-04
-1.5227E-04
          9            0.1700  -6.9759E-03    -0.018739  -1.7958E-06   3.0144E-04
-1.5227E-04
         10            0.1837  -6.9759E-03    -0.018900  -1.7958E-06   3.0144E-04
-1.5227E-04
         11            0.1123  -2.1007E-04  -7.0836E-03   2.3256E-05   1.5050E-04
3.0144E-04
         12            0.1259  -2.3031E-03  -7.0836E-03   2.3256E-05   1.5050E-04
3.0144E-04
         13            0.1394  -4.3961E-03  -7.0836E-03   2.3256E-05   1.5050E-04
3.0144E-04
         14            0.1530  -6.4891E-03  -7.0836E-03   2.3256E-05   1.5050E-04
3.0144E-04
         15            0.1665  -8.5821E-03  -7.0836E-03   2.3256E-05   1.5050E-04
3.0144E-04

       MINIMUM         0.1123  -8.5821E-03    -0.018900  -2.6799E-05   1.4991E-04
-1.5227E-04
       Pile N.         11           15           10            1            1
    6
       MAXIMUM         0.1960     0.051814  -6.8681E-03   2.3256E-05   3.0144E-04
3.0144E-04
       Pile N.          5            5            1           11            6
    1

       * PILE TOP REACTIONS *

      PILE GROUP   AXIAL,KIP    LAT. y,KIP   LAT. z,KIP MOM x,KIP-IN MOM y,KIP-IN
MOM z,KIP-IN
      **********  ***********  ***********  ***********  ***********  ***********
***********
          1            173.02       10.765      -1.1371       0.0000       0.0000
   0.0000
          2            188.38       11.084      -1.1063       0.0000       0.0000
   0.0000
          3            203.74       11.393      -1.0777       0.0000       0.0000
   0.0000
          4            219.10       11.727      -1.0541       0.0000   9.5776E-14
```

```
   0.0000
          5            234.46       12.025      -1.0295       0.0000  -9.5776E-14
   0.0000
          6            154.44      -2.5030      -4.2618       0.0000       0.0000
   0.0000
          7            169.07      -2.4943      -4.2805       0.0000  -1.9155E-13
3.2947E-13
          8            183.70      -2.4857      -4.2990       0.0000  -1.9155E-13
   0.0000
          9            198.33      -2.4869      -4.3342       0.0000       0.0000
3.2947E-13
         10            212.95      -2.4798      -4.3549       0.0000  -1.9155E-13
-3.2947E-13
         11            139.30      -0.1173      -2.3804       0.0000       0.0000
1.0296E-14
         12            154.73      -1.2091      -2.2830       0.0000  -9.5776E-14
   0.0000
         13            170.16      -2.0909      -2.1103       0.0000   9.5776E-14
-1.6473E-13
         14            185.59      -2.8094      -1.9446       0.0000   9.5776E-14
   0.0000
         15            201.02      -3.3958      -1.7892       0.0000  -9.5776E-14
3.2947E-13

       MINIMUM         139.30      -3.3958      -4.3549       0.0000  -1.9155E-13
-3.2947E-13
       Pile N.         11           15           10            1            7
   10
       MAXIMUM         234.46       12.025      -1.0295       0.0000   9.5776E-14
3.2947E-13
       Pile N.          5            5            5            1            4
    7

      PILE GROUP   STRESS,KIP/IN**2
      **********  ****************
          1            6.1192
          2            6.6625
          3            7.2058
          4            7.7491
          5            8.2924
          6            5.4624
          7            5.9797
          8            6.4970
          9            7.0143
         10            7.5317
         11            4.9266
         12            5.4723
         13            6.0181
         14            6.5638
         15            7.1095
```

```
       MINIMUM         4.9266
       Pile N.         11
       MAXIMUM         8.2924
       Pile N.          5

       * EFFECTS FOR LATERALLY LOADED PILE *

       * MINIMUM VALUES AND LOCATIONS *

     PILE     DISPL.      DISPL.      MOMENT      MOMENT       SHEAR       SHEAR
SOIL REACT  SOIL REACT     TOTAL    FLEX. RIG.  FLEX. RIG.
               y-DIR       z-DIR       z-DIR       y-DIR       y-DIR       z-DIR
  y-DIR       z-DIR      STRESS       z-DIR       y-DIR
                IN          IN        KIP-IN      KIP-IN        KIP         KIP
 KIP/IN      KIP/IN     KIP/IN**2   KIP-IN**2   KIP-IN**2
    ******  **********  **********  **********  **********  **********  **********
**********  **********  **********  **********  **********
        1  -5.1996E-03 -6.8681E-03     -25.721     -21.790     -2.5891     -1.0210
-0.023891   -0.032880      6.1192  3.1594E+07  9.1843E+06
     x(FT)      11.400      0.0000      19.760      3.0400      6.8400      0.0000
   19.760      1.5200      0.0000      0.0000      0.0000
        2  -5.4491E-03 -6.8681E-03     -27.045     -21.425     -2.6660     -0.9928
-0.025886   -0.031720      6.6625  3.1594E+07  9.1843E+06
     x(FT)      11.400      0.0000      19.760      3.0400      6.8400      0.0000
   20.520      1.5200      0.0000      0.0000      0.0000
        3  -5.6919E-03 -6.8681E-03     -28.328     -21.082     -2.7404     -0.9667
-0.028146   -0.030655      7.2058  3.1594E+07  9.1843E+06
     x(FT)      11.400      0.0000      19.760      3.0400      6.8400      0.0000
   20.520      1.5200      0.0000      0.0000      0.0000
        4  -5.9365E-03 -6.8681E-03     -29.605     -20.799     -2.8214     -0.9448
-0.030266   -0.029783      7.7491  3.1594E+07  9.1843E+06
     x(FT)      11.400      0.0000      19.760      3.0400      6.8400      0.0000
   20.520      1.5200      66.120      0.0000      0.0000
        5  -6.1689E-03 -6.8681E-03     -30.818     -20.502     -2.8931     -0.9223
-0.032424   -0.028887      8.2924  3.1594E+07  9.1843E+06
     x(FT)      11.400      0.0000      19.760      3.0400      6.8400      0.0000
   20.520      1.5200      66.120      0.0000      0.0000
        6  -6.9759E-03   -0.018254     -54.479     -71.941     -2.3648     -3.9003
-0.082446     -0.1535      5.4624  3.1594E+07  9.1843E+06
     x(FT)      0.0000      0.0000      3.8000      2.2800      0.0000      0.0000
   2.2800      2.2800      0.0000      0.0000      0.0000
        7  -6.9759E-03   -0.018415     -54.416     -72.452     -2.3566     -3.9170
-0.082167     -0.1543      5.9797  3.1594E+07  9.1843E+06
     x(FT)      0.0000      0.0000      3.8000      2.2800      0.0000      0.0000
   2.2800      2.2800      57.000      0.0000      0.0000
        8  -6.9759E-03   -0.018577     -54.353     -72.962     -2.3484     -3.9334
-0.081890     -0.1552      6.4970  3.1594E+07  9.1843E+06
     x(FT)      0.0000      0.0000      3.8000      2.2800      0.0000      0.0000
   2.2800      2.2800      57.000      0.0000      0.0000
```

```
        9  -6.9759E-03   -0.018739     -54.430     -73.682     -2.3493     -3.9645
-0.081985     -0.1566      7.0143  3.1594E+07  9.1843E+06
     x(FT)      0.0000      0.0000      3.8000      2.2800      0.0000      0.0000
   2.2800      2.2800      57.000      0.0000      0.0000
       10  -6.9759E-03   -0.018900     -54.388     -74.222     -2.3425     -3.9828
-0.081766     -0.1575      7.5317  3.1594E+07  9.1843E+06
     x(FT)      0.0000      0.0000      3.8000      2.2800      0.0000      0.0000
   2.2800      2.2800      57.000      0.0000      0.0000
       11  -2.1007E-04 -7.0836E-03     -2.5905     -38.998     -0.1121     -2.2050
-5.0343E-03   -0.088972      4.9266  3.1594E+07  9.1843E+06
     x(FT)      0.0000      0.0000      3.0400      2.2800      0.0000      0.0000
   3.0400      0.7600      0.0000      0.0000      0.0000
       12  -2.3031E-03 -7.0836E-03     -26.250     -37.333     -1.1533     -2.1112
-0.046011   -0.085675      5.4723  3.1594E+07  9.1843E+06
     x(FT)      0.0000      0.0000      3.0400      2.2800      0.0000      0.0000
   3.0400      0.7600      57.000      0.0000      0.0000
       13  -4.3961E-03 -7.0836E-03     -45.162     -34.691     -1.9892     -1.9465
-0.071279   -0.078526      6.0181  3.1594E+07  9.1843E+06
     x(FT)      0.0000      0.0000      3.0400      2.2800      0.0000      0.0000
   3.0400      0.7600      58.520      0.0000      0.0000
       14  -6.4891E-03 -7.0836E-03     -61.104     -32.307     -2.6667     -1.7888
-0.090200   -0.071033      6.5638  3.1594E+07  9.1843E+06
     x(FT)      0.0000      0.0000      3.0400      2.2800      0.0000      0.0000
   3.0400      0.7600      59.280      0.0000      0.0000
       15  -8.5821E-03 -7.0836E-03     -74.874     -30.221     -3.2181     -1.6425
  -0.1054   -0.063676      7.1095  3.1594E+07  9.1843E+06
     x(FT)      0.0000      0.0000      3.0400      3.0400      0.0000      0.0000
   3.0400      0.7600      60.800      0.0000      0.0000

      Min. -8.5821E-03   -0.018900     -74.874     -74.222     -3.2181     -3.9828
  -0.1054     -0.1575      4.9266  3.1594E+07  9.1843E+06
   Pile N.      15          10          15          10          15          10
   15          10          11          1           1

       * MAXIMUM VALUES AND LOCATIONS *

     PILE     DISPL.      DISPL.      MOMENT      MOMENT       SHEAR       SHEAR
SOIL REACT  SOIL REACT     TOTAL    FLEX. RIG.  FLEX. RIG.
               y-DIR       z-DIR       z-DIR       y-DIR       y-DIR       z-DIR
  y-DIR       z-DIR      STRESS       z-DIR       y-DIR
                IN          IN        KIP-IN      KIP-IN        KIP         KIP
 KIP/IN      KIP/IN     KIP/IN**2   KIP-IN**2   KIP-IN**2
    ******  **********  **********  **********  **********  **********  **********
**********  **********  **********  **********  **********
        1     0.042166  9.8058E-04      266.21      1.5425      10.052      0.2987
   0.2931  2.9166E-03      7.8133  3.1594E+07  9.1843E+06
     x(FT)      0.0000      8.3600      3.8000      15.960      0.0000      5.3200
   3.0400      8.3600      3.8000      0.0000      0.0000
        2     0.044578  9.8310E-04      276.52      1.5363      10.347      0.2921
   0.3008  2.8177E-03      8.4166  3.1594E+07  9.1843E+06
```

```
     x(FT)      0.0000      8.3600      3.8000      15.960      0.0000      5.3200
   3.0400      8.3600      3.8000      0.0000      0.0000
        3     0.046990  9.8618E-04      286.62      1.5289      10.634      0.2859
   0.3083  2.7261E-03      9.0190  3.1594E+07  9.1843E+06
     x(FT)      0.0000      9.1200      3.8000      15.960      0.0000      5.3200
   3.0400      8.3600      3.8000      0.0000      0.0000
        4     0.049402  9.9131E-04      297.11      1.5221      10.941      0.2810
   0.3164  2.6521E-03      9.6241  3.1594E+07  9.1843E+06
     x(FT)      0.0000      9.1200      3.8000      15.960      0.0000      5.3200
   3.0400      8.3600      3.8000      0.0000      0.0000
        5     0.051814  9.9650E-04      307.11      1.5134      11.217      0.2757
   0.3236  2.5824E-03      10.225  3.1594E+07  9.1843E+06
     x(FT)      0.0000      9.1200      4.5600      15.960      0.0000      5.3200
   3.0400      9.1200      3.8000      0.0000      0.0000
        6   7.9748E-04  2.5669E-03      4.2883      5.3121      0.5892      1.0659
6.1363E-03    0.011469      7.0146  3.1594E+07  9.1843E+06
     x(FT)      9.8800      7.6000      17.480      13.680      6.0800      4.5600
   13.680      9.1200      2.2800      0.0000      0.0000
        7   7.9780E-04  2.5983E-03      4.2898      5.3747      0.5881      1.0742
6.1372E-03    0.011546      7.5424  3.1594E+07  9.1843E+06
     x(FT)      9.8800      7.6000      17.480      13.680      6.0800      4.5600
   13.680      9.1200      2.2800      0.0000      0.0000
        8   7.9812E-04  2.6299E-03      4.2913      5.4376      0.5870      1.0825
6.1381E-03    0.011624      8.0702  3.1594E+07  9.1843E+06
     x(FT)      9.8800      7.6000      17.480      13.680      6.0800      4.5600
   13.680      9.1200      2.2800      0.0000      0.0000
        9   8.0009E-04  2.6613E-03      4.3038      5.5111      0.5885      1.0953
6.1641E-03    0.011752      8.6025  3.1594E+07  9.1843E+06
     x(FT)      9.8800      7.6000      17.480      13.680      6.0800      4.5600
   13.680      9.1200      2.2800      0.0000      0.0000
       10   8.0066E-04  2.6931E-03      4.3068      5.5762      0.5878      1.1043
6.1687E-03    0.011838      9.1310  3.1594E+07  9.1843E+06
     x(FT)      9.8800      7.6000      17.480      13.680      6.0800      4.5600
   13.680      9.1200      2.2800      0.0000      0.0000
       11   3.7293E-05  1.1480E-03      0.2797      2.7760    0.033008      0.8080
5.0064E-04    0.022752      5.7518  3.1594E+07  9.1843E+06
     x(FT)      8.3600      6.8400      15.200      12.920      4.5600      3.8000
   15.200      4.5600      2.2800      0.0000      0.0000
       12   3.8964E-04  1.1269E-03      2.2340      2.5555      0.3200      0.7329
3.1556E-03    0.020094      6.2759  3.1594E+07  9.1843E+06
     x(FT)      8.3600      6.8400      15.200      12.920      5.3200      3.8000
   12.160      4.5600      2.2800      0.0000      0.0000
       13   6.9131E-04  1.0902E-03      3.5869      2.2718      0.5359      0.6349
5.0523E-03    0.015694      6.7947  3.1594E+07  9.1843E+06
     x(FT)      9.1200      6.8400      16.720      12.920      5.3200      3.8000
   11.400      4.5600      2.2800      0.0000      0.0000
       14   9.7531E-04  1.0600E-03      4.8286      2.0919      0.7055      0.5549
6.3691E-03    0.011671      7.3372  3.1594E+07  9.1843E+06
     x(FT)      9.1200      7.6000      16.720      13.680      5.3200      3.8000
   11.400      4.5600      3.0400      0.0000      0.0000
```

```
       15   1.2440E-03  1.0530E-03      6.0417      1.9513      0.8402      0.4909
7.3139E-03  8.0349E-03      7.8974  3.1594E+07  9.1843E+06
     x(FT)      9.8800      7.6000      17.480      13.680      5.3200      4.5600
   11.400      4.5600      3.0400      0.0000      0.0000

      Max.    0.051814  2.6931E-03      307.11      5.5762      11.217      1.1043
   0.3236    0.022752      10.225  3.1594E+07  9.1843E+06
   Pile N.       5          10           5          10           5          10
    5          11           5           1           1



                 *****     SUMMARY FOR LOAD CASES AND COMBINATIONS      *****


                 *****     LOAD CASES RESULTS      *****

     LOAD CASE :     1

     * TABLE L *   COMPUTATION ON PILE CAP

     * EQUIVALENT CONCENTRATED LOAD AT ORIGIN *
          LOAD X,KIP     LOAD Y,KIP     LOAD Z,KIP    MOM X,KIP-IN   MOM Y,KIP-IN
MOM Z,KIP-IN
               2023.07        44.8400       -27.9100        0.00000        38374.6
     10703.2

     * DISPLACEMENT OF GROUPED PILE FOUNDATION AT ORIGIN *
           DISP X,IN      DISP Y,IN      DISP Z,IN      ROT X,RAD      ROT Y,RAD
  ROT Z,RAD
               0.11077      0.0152931   -4.98888E-03   -8.39553E-06    1.43589E-04
 3.01722E-04

       * PILE TOP DISPLACEMENTS, GLOBAL *
                   DISP. X,IN   DISP. Y,IN   DISP. Z,IN   ROT. X,RAD   ROT. Y,RAD
ROT. Z,RAD
                  ***********  ***********  ***********  ***********  ***********
***********
       MINIMUM       0.066823     0.013782  -5.4926E-03  -8.3955E-06   1.4359E-04
3.0172E-04
       Pile N.         11           1           11           1           1
    1
       MAXIMUM         0.1547     0.016804  -4.4851E-03  -8.3955E-06   1.4359E-04
3.0172E-04
       Pile N.          5           5           1           1           1
    1

       * PILE TOP REACTIONS, GLOBAL *
                   FOR. X,KIP   FOR. Y,KIP   FOR. Z,KIP MOM X,KIP-IN MOM Y,KIP-IN
```

```
MOM Z,KIP-IN
                    ***********  ***********  ***********  ***********  ***********
***********
       MINIMUM         87.560      -19.253      -2.0637  -7.8708E-15  -4.7237E-14
-1.3179E-12
       Pile N.         11            5           13            2            2
    1
       MAXIMUM         181.26       22.689      -0.7468   7.8708E-15   4.7237E-14
   0.0000
       Pile N.          5           15            5            4            4
    2

       * PILE TOP DISPLACEMENTS, LOCAL *
                     DISP. x,IN   DISP. y,IN   DISP. z,IN   ROT. x,RAD   ROT. y,RAD
ROT. z,RAD
                    ***********  ***********  ***********  ***********  ***********
***********
       MINIMUM       0.068179  -4.9889E-03    -0.016804  -3.1882E-05   1.4026E-04
-1.4359E-04
       Pile N.         11            6           10            1            1
    6
       MAXIMUM         0.1499     0.042006  -4.4851E-03   1.5319E-05   3.0172E-04
3.0172E-04
       Pile N.          5            5            1           11            6
    1

       * PILE TOP REACTIONS, LOCAL *
                     AXIAL,KIP    LAT. y,KIP   LAT. z,KIP MOM x,KIP-IN MOM y,KIP-IN
MOM z,KIP-IN
                    ***********  ***********  ***********  ***********  ***********
***********
       MINIMUM         89.010      -2.0633      -4.1768       0.0000  -1.9155E-13
-1.3179E-12
       Pile N.         11            6           10            1            7
    1
       MAXIMUM         181.96       10.801      -0.7468       0.0000   4.7888E-14
   0.0000
       Pile N.          5            5            5            1            4
    2

       * EFFECTS FOR LATERALLY LOADED PILE *

     PILE     DISPL.      DISPL.      MOMENT      MOMENT       SHEAR       SHEAR
SOIL REACT  SOIL REACT     TOTAL
               y-DIR       z-DIR       z-DIR       y-DIR       y-DIR       z-DIR
  y-DIR       z-DIR      STRESS
                IN          IN        KIP-IN      KIP-IN        KIP         KIP
 KIP/IN      KIP/IN     KIP/IN**2
    ******  **********  **********  **********  **********  **********  **********
**********  **********  **********
```

```
      Min. -5.2630E-03   -0.016804     -42.873     -70.001     -2.6194     -3.8270
-0.069555     -0.1522      3.1481
   Pile N.       5          10           6          10           5          10
    6          10          11
      Max.    0.042006  2.4181E-03      267.26      5.2582      10.085      1.0700
   0.2923    0.022110      8.1037
   Pile N.       5          10           5          10           5          10
    5          13           5

     LOAD CASE :     2

     * TABLE L *   COMPUTATION ON PILE CAP

     * EQUIVALENT CONCENTRATED LOAD AT ORIGIN *
          LOAD X,KIP     LOAD Y,KIP     LOAD Z,KIP    MOM X,KIP-IN   MOM Y,KIP-IN
MOM Z,KIP-IN
               2168.48        44.8400       -27.9100        0.00000        31394.6
     10703.2

     * DISPLACEMENT OF GROUPED PILE FOUNDATION AT ORIGIN *
           DISP X,IN      DISP Y,IN      DISP Z,IN      ROT X,RAD      ROT Y,RAD
  ROT Z,RAD
               0.11958      0.0162195   -5.06175E-03   -5.15298E-06    1.17523E-04
 3.04699E-04

       * PILE TOP DISPLACEMENTS, GLOBAL *
                    DISP. X,IN   DISP. Y,IN   DISP. Z,IN   ROT. X,RAD   ROT. Y,RAD
ROT. Z,RAD
                  ***********  ***********  ***********  ***********  ***********
***********
       MINIMUM       0.080147     0.015292  -5.3709E-03  -5.1530E-06   1.1752E-04
3.0470E-04
       Pile N.         11            1           11            1            1
    1
       MAXIMUM         0.1590     0.017147  -4.7526E-03  -5.1530E-06   1.1752E-04
3.0470E-04
       Pile N.          5            5            1            1            1
    1

       * PILE TOP REACTIONS, GLOBAL *
                    FOR. X,KIP   FOR. Y,KIP   FOR. Z,KIP MOM X,KIP-IN MOM Y,KIP-IN
MOM Z,KIP-IN
                  ***********  ***********  ***********  ***********  ***********
***********
       MINIMUM         102.66      -19.902      -2.0261  -7.8708E-15  -4.7237E-14
-1.3179E-12
       Pile N.         11            5           12            4            4
    2
       MAXIMUM         185.98       23.283      -0.7816   7.8708E-15   4.7237E-14
   0.0000
```

```
      Pile N.          5           15            5            1            1
    1

      * PILE TOP DISPLACEMENTS, LOCAL *
                   DISP. x,IN   DISP. y,IN   DISP. z,IN   ROT. x,RAD   ROT. y,RAD
ROT. z,RAD
                  ***********  ***********  ***********  ***********  ***********
***********
      MINIMUM       0.081571  -5.0618E-03    -0.017147  -2.4399E-05   1.1508E-04
-1.1752E-04
      Pile N.         11            6           10            1            1
    6
      MAXIMUM         0.1540     0.043050  -4.7526E-03   1.4233E-05   3.0470E-04
3.0470E-04
      Pile N.          5            5            1           11            6
    1

      * PILE TOP REACTIONS, LOCAL *
                   AXIAL,KIP    LAT. y,KIP   LAT. z,KIP MOM x,KIP-IN MOM y,KIP-IN
MOM z,KIP-IN
                  ***********  ***********  ***********  ***********  ***********
***********
      MINIMUM         104.27      -2.0133      -4.2207       0.0000  -1.9155E-13
-1.3179E-12
      Pile N.         11            6           10            1            6
    2
      MAXIMUM         186.72       10.937      -0.7816       0.0000   4.7888E-14
   0.0000
      Pile N.          5            5            5            1            1
    1

      * EFFECTS FOR LATERALLY LOADED PILE *

     PILE     DISPL.      DISPL.      MOMENT      MOMENT       SHEAR       SHEAR
SOIL REACT  SOIL REACT     TOTAL
               y-DIR       z-DIR       z-DIR       y-DIR       y-DIR       z-DIR
  y-DIR       z-DIR      STRESS
                IN          IN        KIP-IN      KIP-IN        KIP         KIP
 KIP/IN      KIP/IN     KIP/IN**2
    ******  **********  **********  **********  **********  **********  **********
**********  **********  **********
      Min. -5.3546E-03   -0.017147     -42.686     -70.942     -2.6497     -3.8669
-0.067305     -0.1537      3.6877
   Pile N.        5          10           6          10           5          10
    6          10          11
      Max.    0.043050  2.4716E-03      271.61      5.3596      10.210      1.0820
   0.2958    0.021756      8.3012
   Pile N.        5          10           5          10           5          10
    5          13           5
```

```
     LOAD CASE :     3

     * TABLE L *   COMPUTATION ON PILE CAP

     * EQUIVALENT CONCENTRATED LOAD AT ORIGIN *
          LOAD X,KIP     LOAD Y,KIP     LOAD Z,KIP    MOM X,KIP-IN   MOM Y,KIP-IN
MOM Z,KIP-IN
              2665.02        30.9100        0.00000        0.00000        50386.2
     8261.37

     * DISPLACEMENT OF GROUPED PILE FOUNDATION AT ORIGIN *
           DISP X,IN      DISP Y,IN      DISP Z,IN      ROT X,RAD      ROT Y,RAD
  ROT Z,RAD
              0.14966      0.0105169    7.93496E-06   -2.49179E-06    1.88923E-04
 2.33351E-04

       * PILE TOP DISPLACEMENTS, GLOBAL *
                   DISP. X,IN   DISP. Y,IN   DISP. Z,IN   ROT. X,RAD   ROT. Y,RAD
ROT. Z,RAD
                  ***********  ***********  ***********  ***********  ***********
***********
       MINIMUM         0.1017     0.010068  -1.4157E-04  -2.4918E-06   1.8892E-04
2.3335E-04
       Pile N.         11            1           11            1            1
    1
       MAXIMUM         0.1977     0.010965   1.5744E-04  -2.4918E-06   1.8892E-04
2.3335E-04
       Pile N.          5            5            1            1            1
    1

       * PILE TOP REACTIONS, GLOBAL *
                   FOR. X,KIP   FOR. Y,KIP   FOR. Z,KIP MOM X,KIP-IN MOM Y,KIP-IN
MOM Z,KIP-IN
                  ***********  ***********  ***********  ***********  ***********
***********
       MINIMUM         126.25      -27.215    -0.043018  -5.8646E-30  -1.4761E-15
-1.3179E-12
       Pile N.         11            5           11            6           11
    2
       MAXIMUM         229.94       28.431     0.030170   2.4596E-16   3.2175E-16
1.3179E-12
       Pile N.          5           15            1           11            6
    1

       * PILE TOP DISPLACEMENTS, LOCAL *
                   DISP. x,IN   DISP. y,IN   DISP. z,IN   ROT. x,RAD   ROT. y,RAD
ROT. z,RAD
                  ***********  ***********  ***********  ***********  ***********
***********
       MINIMUM         0.1019    -0.017070    -0.010965  -3.3509E-05   1.8594E-04
```

```
-1.8892E-04
       Pile N.         11           15           10            1            1
    6
       MAXIMUM         0.1932     0.043305   1.5744E-04   2.8593E-05   2.3335E-04
2.3335E-04
       Pile N.          5            5            1           11            6
    1

       * PILE TOP REACTIONS, LOCAL *
                    AXIAL,KIP    LAT. y,KIP   LAT. z,KIP MOM x,KIP-IN MOM y,KIP-IN
MOM z,KIP-IN
                  ***********  ***********  ***********  ***********  ***********
***********
       MINIMUM         127.46      -5.1772      -3.4078       0.0000  -1.4965E-15
-1.3179E-12
       Pile N.         11           15           10            1           11
    2
       MAXIMUM         231.29       10.949     0.030170       0.0000   9.5776E-14
1.3179E-12
       Pile N.          5            5            1            1            6
    1

       * EFFECTS FOR LATERALLY LOADED PILE *

     PILE     DISPL.      DISPL.      MOMENT      MOMENT       SHEAR       SHEAR
SOIL REACT  SOIL REACT     TOTAL
               y-DIR       z-DIR       z-DIR       y-DIR       y-DIR       z-DIR
  y-DIR       z-DIR      STRESS
                IN          IN        KIP-IN      KIP-IN        KIP         KIP
 KIP/IN      KIP/IN     KIP/IN**2
    ******  **********  **********  **********  **********  **********  **********
**********  **********  **********
      Min.   -0.017070   -0.010965     -122.91     -54.958     -4.8907     -3.1334
  -0.1431     -0.1300      4.5079
   Pile N.      15          10          15          10          15          10
   15          10          11
      Max.    0.043305  1.6366E-03      273.73      4.0177      10.221      0.9342
   0.2945    0.025184      9.8637
   Pile N.       5          10           5          10           5          10
    5           6           5

     LOAD CASE :     4

     * TABLE L *   COMPUTATION ON PILE CAP

     * EQUIVALENT CONCENTRATED LOAD AT ORIGIN *
          LOAD X,KIP     LOAD Y,KIP     LOAD Z,KIP    MOM X,KIP-IN   MOM Y,KIP-IN
MOM Z,KIP-IN
               2919.49        30.9100        0.00000        0.00000        38171.4
     8261.37
```

```
    * DISPLACEMENT OF GROUPED PILE FOUNDATION AT ORIGIN *
           DISP X,IN      DISP Y,IN      DISP Z,IN      ROT X,RAD      ROT Y,RAD
  ROT Z,RAD
              0.16512      0.0105330    3.39191E-06   -1.46013E-06    1.43150E-04
 2.33923E-04

      * PILE TOP DISPLACEMENTS, GLOBAL *
                  DISP. X,IN   DISP. Y,IN   DISP. Z,IN   ROT. X,RAD   ROT. Y,RAD
ROT. Z,RAD
                 ***********  ***********  ***********  ***********  ***********
***********
      MINIMUM         0.1253     0.010270  -8.4216E-05  -1.4601E-06   1.4315E-04
2.3392E-04
      Pile N.         11            1           11            1            1
    1
      MAXIMUM         0.2049     0.010796   9.1000E-05  -1.4601E-06   1.4315E-04
2.3392E-04
      Pile N.          5            5            1            1            1
    1

      * PILE TOP REACTIONS, GLOBAL *
                  FOR. X,KIP   FOR. Y,KIP   FOR. Z,KIP MOM X,KIP-IN MOM Y,KIP-IN
MOM Z,KIP-IN
                 ***********  ***********  ***********  ***********  ***********
***********
      MINIMUM         152.65      -28.428    -0.020787  -5.8646E-30  -1.6087E-16
-9.8506E-33
      Pile N.         11            5           11            8            6
   10
      MAXIMUM         238.03       29.543     0.016411       0.0000   1.6087E-16
1.3179E-12
      Pile N.          5           15            1            1           10
    1

      * PILE TOP DISPLACEMENTS, LOCAL *
                  DISP. x,IN   DISP. y,IN   DISP. z,IN   ROT. x,RAD   ROT. y,RAD
ROT. z,RAD
                 ***********  ***********  ***********  ***********  ***********
***********
      MINIMUM         0.1253    -0.018418    -0.010796  -2.4968E-05   1.4096E-04
-1.4315E-04
      Pile N.         11           15           10            1            1
    6
      MAXIMUM         0.2004     0.044330   9.1000E-05   2.2088E-05   2.3392E-04
2.3392E-04
      Pile N.          5            5            1           11            6
    1

      * PILE TOP REACTIONS, LOCAL *
```

```
                    AXIAL,KIP    LAT. y,KIP   LAT. z,KIP MOM x,KIP-IN MOM y,KIP-IN
MOM z,KIP-IN
                   ***********  ***********  ***********  ***********  ***********
***********
       MINIMUM         154.08      -5.3893      -3.3775       0.0000       0.0000
-1.6087E-16
       Pile N.         11           15           10            1            1
   10
       MAXIMUM         239.47       11.081     0.016411       0.0000   9.5776E-14
1.3179E-12
       Pile N.          5            5            1            1            8
    1

       * EFFECTS FOR LATERALLY LOADED PILE *

     PILE     DISPL.      DISPL.      MOMENT      MOMENT       SHEAR       SHEAR
SOIL REACT  SOIL REACT     TOTAL
               y-DIR       z-DIR       z-DIR       y-DIR       y-DIR       z-DIR
  y-DIR       z-DIR      STRESS
                IN          IN        KIP-IN      KIP-IN        KIP         KIP
 KIP/IN      KIP/IN     KIP/IN**2
    ******  **********  **********  **********  **********  **********  **********
**********  **********  **********
      Min.   -0.018418   -0.010796     -129.52     -54.393     -5.0899     -3.1056
  -0.1486     -0.1295      5.4496
   Pile N.      15          10          15          10          15          10
   15          10          11
      Max.    0.044330  1.6085E-03      278.11      3.9565      10.343      0.9309
   0.2978    0.025113      10.180
   Pile N.       5          10           5          10           5          10
    5           6           5

     LOAD CASE :     5

     * TABLE L *   COMPUTATION ON PILE CAP

     * EQUIVALENT CONCENTRATED LOAD AT ORIGIN *
          LOAD X,KIP     LOAD Y,KIP     LOAD Z,KIP    MOM X,KIP-IN   MOM Y,KIP-IN
MOM Z,KIP-IN
               1986.29        30.9100        0.00000        0.00000        50386.2
     8261.37

     * DISPLACEMENT OF GROUPED PILE FOUNDATION AT ORIGIN *
           DISP X,IN      DISP Y,IN      DISP Z,IN      ROT X,RAD      ROT Y,RAD
  ROT Z,RAD
               0.10845      0.0100628    4.26641E-05   -5.26312E-06    1.88764E-04
 2.30549E-04

       * PILE TOP DISPLACEMENTS, GLOBAL *
                   DISP. X,IN   DISP. Y,IN   DISP. Z,IN   ROT. X,RAD   ROT. Y,RAD
```

```
ROT. Z,RAD
                    ***********  ***********  ***********  ***********  ***********
***********
       MINIMUM       0.060643   9.1155E-03  -2.7312E-04  -5.2631E-06   1.8876E-04
2.3055E-04
       Pile N.         11            1           11            1            1
    1
       MAXIMUM         0.1563     0.011010   3.5845E-04  -5.2631E-06   1.8876E-04
2.3055E-04
       Pile N.          5            5            1            1            1
    1

       * PILE TOP REACTIONS, GLOBAL *
                     FOR. X,KIP   FOR. Y,KIP   FOR. Z,KIP MOM X,KIP-IN MOM Y,KIP-IN
MOM Z,KIP-IN
                    ***********  ***********  ***********  ***********  ***********
***********
       MINIMUM         80.269      -20.480      -0.1985  -4.9193E-16  -2.9523E-15
-4.1183E-14
       Pile N.         11            5           11           11           14
   11
       MAXIMUM         183.91       22.053     0.078853   4.9193E-16   2.9523E-15
1.6473E-13
       Pile N.          5           15            1           14           11
   12

       * PILE TOP DISPLACEMENTS, LOCAL *
                     DISP. x,IN   DISP. y,IN   DISP. z,IN   ROT. x,RAD   ROT. y,RAD
ROT. z,RAD
                    ***********  ***********  ***********  ***********  ***********
***********
       MINIMUM       0.061316    -0.010276    -0.011010  -3.6217E-05   1.8533E-04
-1.8876E-04
       Pile N.         11           15           10            1            1
    6
       MAXIMUM         0.1523     0.036544   3.5845E-04   2.5833E-05   2.3055E-04
2.3055E-04
       Pile N.          5            5            1           11            6
    1

       * PILE TOP REACTIONS, LOCAL *
                     AXIAL,KIP    LAT. y,KIP   LAT. z,KIP MOM x,KIP-IN MOM y,KIP-IN
MOM z,KIP-IN
                    ***********  ***********  ***********  ***********  ***********
***********
       MINIMUM         81.192      -3.9543      -3.4257       0.0000  -2.9930E-15
-4.1183E-14
       Pile N.         11           15           10            1           14
   11
       MAXIMUM         184.78       10.026     0.078853       0.0000   9.5776E-14
```

```
1.6473E-13
       Pile N.          5            5            1            1            8
   12

       * EFFECTS FOR LATERALLY LOADED PILE *

     PILE     DISPL.      DISPL.      MOMENT      MOMENT       SHEAR       SHEAR
SOIL REACT  SOIL REACT     TOTAL
               y-DIR       z-DIR       z-DIR       y-DIR       y-DIR       z-DIR
  y-DIR       z-DIR      STRESS
                IN          IN        KIP-IN      KIP-IN        KIP         KIP
 KIP/IN      KIP/IN     KIP/IN**2
    ******  **********  **********  **********  **********  **********  **********
**********  **********  **********
      Min.   -0.010276   -0.011010     -86.622     -55.051     -3.7410     -3.1506
  -0.1104     -0.1302      2.8716
   Pile N.      15          10          15          10          15          10
   15          10          11
      Max.    0.036544  1.6381E-03      243.89      4.0158      9.3667      0.9287
   0.2716    0.025361      8.0352
   Pile N.       5          10           5          10           5          10
    5           6           5

     LOAD CASE :     6

     * TABLE L *   COMPUTATION ON PILE CAP

     * EQUIVALENT CONCENTRATED LOAD AT ORIGIN *
          LOAD X,KIP     LOAD Y,KIP     LOAD Z,KIP    MOM X,KIP-IN   MOM Y,KIP-IN
MOM Z,KIP-IN
               2240.76        30.9100        0.00000        0.00000        38171.4
     8261.37

     * DISPLACEMENT OF GROUPED PILE FOUNDATION AT ORIGIN *
           DISP X,IN      DISP Y,IN      DISP Z,IN      ROT X,RAD      ROT Y,RAD
  ROT Z,RAD
               0.12390      0.0103956    1.37367E-05   -2.80218E-06    1.43068E-04
 2.32109E-04

       * PILE TOP DISPLACEMENTS, GLOBAL *
                   DISP. X,IN   DISP. Y,IN   DISP. Z,IN   ROT. X,RAD   ROT. Y,RAD
ROT. Z,RAD
                  ***********  ***********  ***********  ***********  ***********
***********
       MINIMUM       0.084218   9.8912E-03  -1.5439E-04  -2.8022E-06   1.4307E-04
2.3211E-04
       Pile N.         11           1           11           1           1
    1
       MAXIMUM         0.1636     0.010900   1.8187E-04  -2.8022E-06   1.4307E-04
2.3211E-04
```

```
       Pile N.          5            5            1            1            1
    1

       * PILE TOP REACTIONS, GLOBAL *
                    FOR. X,KIP   FOR. Y,KIP   FOR. Z,KIP MOM X,KIP-IN MOM Y,KIP-IN
MOM Z,KIP-IN
                   ***********  ***********  ***********  ***********  ***********
***********
       MINIMUM         106.76      -21.681    -0.059689  -2.4596E-16  -1.4761E-15
-1.3179E-12
       Pile N.         11            5           11           11           12
    2
       MAXIMUM         192.06       23.114     0.036654   2.4596E-16   1.4761E-15
1.3179E-12
       Pile N.          5           15            1           12           11
    4

       * PILE TOP DISPLACEMENTS, LOCAL *
                    DISP. x,IN   DISP. y,IN   DISP. z,IN   ROT. x,RAD   ROT. y,RAD
ROT. z,RAD
                   ***********  ***********  ***********  ***********  ***********
***********
       MINIMUM       0.084699    -0.011555    -0.010900  -2.6279E-05   1.4066E-04
-1.4307E-04
       Pile N.         11           15           10            1            1
    6
       MAXIMUM         0.1596     0.037637   1.8187E-04   2.0751E-05   2.3211E-04
2.3211E-04
       Pile N.          5            5            1           11            6
    1

       * PILE TOP REACTIONS, LOCAL *
                    AXIAL,KIP    LAT. y,KIP   LAT. z,KIP MOM x,KIP-IN MOM y,KIP-IN
MOM z,KIP-IN
                   ***********  ***********  ***********  ***********  ***********
***********
       MINIMUM         107.83      -4.2097      -3.4053       0.0000  -9.5776E-14
-1.3179E-12
       Pile N.         11           15           10            1            6
    2
       MAXIMUM         193.01       10.181     0.036654       0.0000   1.4965E-15
1.3179E-12
       Pile N.          5            5            1            1           11
    4

       * EFFECTS FOR LATERALLY LOADED PILE *

     PILE     DISPL.      DISPL.      MOMENT      MOMENT       SHEAR       SHEAR
SOIL REACT  SOIL REACT     TOTAL
               y-DIR       z-DIR       z-DIR       y-DIR       y-DIR       z-DIR
```

```
  y-DIR       z-DIR      STRESS
                IN          IN        KIP-IN      KIP-IN        KIP         KIP
 KIP/IN      KIP/IN     KIP/IN**2
    ******  **********  **********  **********  **********  **********  **********
**********  **********  **********
      Min.   -0.011556   -0.010900     -93.573     -54.689     -3.9813     -3.1319
  -0.1174     -0.1298      3.8137
   Pile N.      15          10          15          10          15          10
   15          10          11
      Max.    0.037637  1.6202E-03      248.86      3.9774      9.5101      0.9270
   0.2754    0.025239      8.3568
   Pile N.       5          10           5          10           5          10
    5           6           5

     LOAD CASE :     7

     * TABLE L *   COMPUTATION ON PILE CAP

     * EQUIVALENT CONCENTRATED LOAD AT ORIGIN *
          LOAD X,KIP     LOAD Y,KIP     LOAD Z,KIP    MOM X,KIP-IN   MOM Y,KIP-IN
MOM Z,KIP-IN
               2183.55        29.1900       -44.5700        0.00000        22034.8
     4350.02

     * DISPLACEMENT OF GROUPED PILE FOUNDATION AT ORIGIN *
           DISP X,IN      DISP Y,IN      DISP Z,IN      ROT X,RAD      ROT Y,RAD
  ROT Z,RAD
               0.12039    8.91397E-03   -7.97310E-03    4.11424E-07    8.28002E-05
 1.29698E-04

       * PILE TOP DISPLACEMENTS, GLOBAL *
                   DISP. X,IN   DISP. Y,IN   DISP. Z,IN   ROT. X,RAD   ROT. Y,RAD
ROT. Z,RAD
                  ***********  ***********  ***********  ***********  ***********
***********
       MINIMUM       0.097700   8.8399E-03  -7.9978E-03   4.1142E-07   8.2800E-05
1.2970E-04
       Pile N.         11           5           1           1           1
    1
       MAXIMUM         0.1431   8.9880E-03  -7.9484E-03   4.1142E-07   8.2800E-05
1.2970E-04
       Pile N.          5           1          11           1           1
    1

       * PILE TOP REACTIONS, GLOBAL *
                   FOR. X,KIP   FOR. Y,KIP   FOR. Z,KIP MOM X,KIP-IN MOM Y,KIP-IN
MOM Z,KIP-IN
                  ***********  ***********  ***********  ***********  ***********
***********
       MINIMUM         121.67      -18.585      -3.6174  -1.5742E-14  -3.2947E-13
```

```
-9.5776E-14
       Pile N.         11            5           10            1            6
    7
       MAXIMUM         169.62       21.017      -1.5375   1.5742E-14   3.2947E-13
2.0174E-29
       Pile N.          5           15            5            5            9
    6

       * PILE TOP DISPLACEMENTS, LOCAL *
                    DISP. x,IN   DISP. y,IN   DISP. z,IN   ROT. x,RAD   ROT. y,RAD
ROT. z,RAD
                  ***********  ***********  ***********  ***********  ***********
***********
       MINIMUM       0.097848    -0.012237  -8.9880E-03  -1.3203E-05   8.1607E-05
-8.2800E-05
       Pile N.         11           15            6            1           11
    6
       MAXIMUM         0.1397     0.032235  -7.9484E-03   1.4015E-05   1.2970E-04
1.2970E-04
       Pile N.          5            5           11           11            6
    1

       * PILE TOP REACTIONS, LOCAL *
                    AXIAL,KIP    LAT. y,KIP   LAT. z,KIP MOM x,KIP-IN MOM y,KIP-IN
MOM z,KIP-IN
                  ***********  ***********  ***********  ***********  ***********
***********
       MINIMUM         122.81      -4.7326      -2.6696       0.0000  -9.5776E-14
-3.2947E-13
       Pile N.         11           15           10            1            1
    9
       MAXIMUM         170.37       9.5460      -1.5375       0.0000   9.5776E-14
3.2947E-13
       Pile N.          5            5            5            1            5
    6

       * EFFECTS FOR LATERALLY LOADED PILE *

     PILE     DISPL.      DISPL.      MOMENT      MOMENT       SHEAR       SHEAR
SOIL REACT  SOIL REACT     TOTAL
               y-DIR       z-DIR       z-DIR       y-DIR       y-DIR       z-DIR
  y-DIR       z-DIR      STRESS
                IN          IN        KIP-IN      KIP-IN        KIP         KIP
 KIP/IN      KIP/IN     KIP/IN**2
    ******  **********  **********  **********  **********  **********  **********
**********  **********  **********
      Min.   -0.012237 -8.9880E-03     -103.83     -41.161     -4.4617     -2.4312
  -0.1421     -0.1072      4.3435
   Pile N.      15           6          15           9          15           9
   15          10          11
```

```
      Max.    0.032235  1.1652E-03      225.02      2.3777      8.9146      0.6550
   0.2660    0.013920      7.5132
   Pile N.       5          11           5           6           5          10
    5          11           5

     LOAD CASE :     8

     * TABLE L *   COMPUTATION ON PILE CAP

     * EQUIVALENT CONCENTRATED LOAD AT ORIGIN *
          LOAD X,KIP     LOAD Y,KIP     LOAD Z,KIP    MOM X,KIP-IN   MOM Y,KIP-IN
MOM Z,KIP-IN
               2183.55        29.1900       -44.5700        0.00000        22034.8
     4350.02

     * DISPLACEMENT OF GROUPED PILE FOUNDATION AT ORIGIN *
           DISP X,IN      DISP Y,IN      DISP Z,IN      ROT X,RAD      ROT Y,RAD
  ROT Z,RAD
               0.12039    8.91397E-03   -7.97310E-03    4.11424E-07    8.28002E-05
 1.29698E-04

       * PILE TOP DISPLACEMENTS, GLOBAL *
                   DISP. X,IN   DISP. Y,IN   DISP. Z,IN   ROT. X,RAD   ROT. Y,RAD
ROT. Z,RAD
                  ***********  ***********  ***********  ***********  ***********
***********
       MINIMUM       0.097700   8.8399E-03  -7.9978E-03   4.1142E-07   8.2800E-05
1.2970E-04
       Pile N.         11            5            1            1            1
    1
       MAXIMUM         0.1431   8.9880E-03  -7.9484E-03   4.1142E-07   8.2800E-05
1.2970E-04
       Pile N.          5            1           11            1            1
    1

       * PILE TOP REACTIONS, GLOBAL *
                   FOR. X,KIP   FOR. Y,KIP   FOR. Z,KIP MOM X,KIP-IN MOM Y,KIP-IN
MOM Z,KIP-IN
                  ***********  ***********  ***********  ***********  ***********
***********
       MINIMUM         121.67      -18.585      -3.6174  -1.5742E-14  -3.2947E-13
-9.5776E-14
       Pile N.         11            5           10            1            6
    7
       MAXIMUM         169.62       21.017      -1.5375   1.5742E-14   3.2947E-13
2.0174E-29
       Pile N.          5           15            5            5            9
    6

       * PILE TOP DISPLACEMENTS, LOCAL *
```

```
                    DISP. x,IN   DISP. y,IN   DISP. z,IN   ROT. x,RAD   ROT. y,RAD
ROT. z,RAD
                   ***********  ***********  ***********  ***********  ***********
***********
       MINIMUM       0.097848    -0.012237  -8.9880E-03  -1.3203E-05   8.1607E-05
-8.2800E-05
       Pile N.         11           15            6            1           11
    6
       MAXIMUM         0.1397     0.032235  -7.9484E-03   1.4015E-05   1.2970E-04
1.2970E-04
       Pile N.          5            5           11           11            6
    1

       * PILE TOP REACTIONS, LOCAL *
                    AXIAL,KIP    LAT. y,KIP   LAT. z,KIP MOM x,KIP-IN MOM y,KIP-IN
MOM z,KIP-IN
                   ***********  ***********  ***********  ***********  ***********
***********
       MINIMUM         122.81      -4.7326      -2.6696       0.0000  -9.5776E-14
-3.2947E-13
       Pile N.         11           15           10            1            1
    9
       MAXIMUM         170.37       9.5460      -1.5375       0.0000   9.5776E-14
3.2947E-13
       Pile N.          5            5            5            1            5
    6

       * EFFECTS FOR LATERALLY LOADED PILE *

     PILE     DISPL.      DISPL.      MOMENT      MOMENT       SHEAR       SHEAR
SOIL REACT  SOIL REACT     TOTAL
               y-DIR       z-DIR       z-DIR       y-DIR       y-DIR       z-DIR
  y-DIR       z-DIR      STRESS
                IN          IN        KIP-IN      KIP-IN        KIP         KIP
 KIP/IN      KIP/IN     KIP/IN**2
    ******  **********  **********  **********  **********  **********  **********
**********  **********  **********
      Min.   -0.012237 -8.9880E-03     -103.83     -41.161     -4.4617     -2.4312
  -0.1421     -0.1072      4.3435
   Pile N.      15           6          15           9          15           9
   15          10          11
      Max.    0.032235  1.1652E-03      225.02      2.3777      8.9146      0.6550
   0.2660    0.013920      7.5132
   Pile N.       5          11           5           6           5          10
    5          11           5

     LOAD CASE :     9

     * TABLE L *   COMPUTATION ON PILE CAP
```

```
     * EQUIVALENT CONCENTRATED LOAD AT ORIGIN *
           LOAD X,KIP     LOAD Y,KIP     LOAD Z,KIP    MOM X,KIP-IN   MOM Y,KIP-IN
MOM Z,KIP-IN
               2701.98        30.9100        0.00000        0.00000        0.00000
     8261.37

     * DISPLACEMENT OF GROUPED PILE FOUNDATION AT ORIGIN *
            DISP X,IN      DISP Y,IN      DISP Z,IN      ROT X,RAD      ROT Y,RAD
  ROT Z,RAD
               0.15191      0.0105807   -6.82576E-16    2.80090E-16   -2.07866E-16
 2.33627E-04

       * PILE TOP DISPLACEMENTS, GLOBAL *
                    DISP. X,IN   DISP. Y,IN   DISP. Z,IN   ROT. X,RAD   ROT. Y,RAD
ROT. Z,RAD
                  ***********  ***********  ***********  ***********  ***********
***********
       MINIMUM         0.1379     0.010581  -1.7488E-14   2.8009E-16  -2.0787E-16
2.3363E-04
       Pile N.         11            1            1            1            1
    1
       MAXIMUM         0.1659     0.010581   1.6123E-14   2.8009E-16  -2.0787E-16
2.3363E-04
       Pile N.          1            1           11            1            1
    1

       * PILE TOP REACTIONS, GLOBAL *
                    FOR. X,KIP   FOR. Y,KIP   FOR. Z,KIP MOM X,KIP-IN MOM Y,KIP-IN
MOM Z,KIP-IN
                  ***********  ***********  ***********  ***********  ***********
***********
       MINIMUM         166.69      -22.115  -3.0547E-12  -2.8634E-26  -1.7185E-25
-9.5776E-14
       Pile N.         11            1            1            1            1
    8
       MAXIMUM         194.72       23.377   3.6930E-12   2.8634E-26   1.7185E-25
   0.0000
       Pile N.          1           11           11           14           13
    1

       * PILE TOP DISPLACEMENTS, LOCAL *
                    DISP. x,IN   DISP. y,IN   DISP. z,IN   ROT. x,RAD   ROT. y,RAD
ROT. z,RAD
                  ***********  ***********  ***********  ***********  ***********
***********
       MINIMUM         0.1378    -0.012226    -0.010581   2.4212E-16  -2.5107E-16
2.0788E-16
       Pile N.         11           11            6           11           11
    6
       MAXIMUM         0.1619     0.037708   1.6123E-14   3.1045E-16   2.3363E-04
```

```
2.3363E-04
       Pile N.          1            1           11            1            6
    1

       * PILE TOP REACTIONS, LOCAL *
                   AXIAL,KIP    LAT. y,KIP   LAT. z,KIP MOM x,KIP-IN MOM y,KIP-IN
MOM z,KIP-IN
                  ***********  ***********  ***********  ***********  ***********
***********
       MINIMUM         168.27      -4.3384      -3.3505       0.0000  -9.5776E-14
   0.0000
       Pile N.         11           11            6            1            8
    1
       MAXIMUM         195.71       10.190   3.6930E-12       0.0000   1.7422E-25
   0.0000
       Pile N.          1            1           11            1           13
    1

       * EFFECTS FOR LATERALLY LOADED PILE *

     PILE     DISPL.      DISPL.      MOMENT      MOMENT       SHEAR       SHEAR
SOIL REACT  SOIL REACT     TOTAL
               y-DIR       z-DIR       z-DIR       y-DIR       y-DIR       z-DIR
  y-DIR       z-DIR      STRESS
                IN          IN        KIP-IN      KIP-IN        KIP         KIP
 KIP/IN      KIP/IN     KIP/IN**2
    ******  **********  **********  **********  **********  **********  **********
**********  **********  **********
      Min.   -0.012226   -0.010581     -97.301     -53.606     -4.1024     -3.0817
  -0.1208     -0.1287      5.9512
   Pile N.      11           6          11           6          11           6
   11           6          11
      Max.    0.037708  1.5657E-03      249.20      3.8567      9.5185      0.9190
   0.2757    0.025019      8.4542
   Pile N.       1           6           1           6           1           6
    1           6           1

     LOAD CASE :    10

     * TABLE L *   COMPUTATION ON PILE CAP

     * EQUIVALENT CONCENTRATED LOAD AT ORIGIN *
          LOAD X,KIP     LOAD Y,KIP     LOAD Z,KIP    MOM X,KIP-IN   MOM Y,KIP-IN
MOM Z,KIP-IN
               2701.98        30.9100        0.00000        0.00000        0.00000
     8261.37

     * DISPLACEMENT OF GROUPED PILE FOUNDATION AT ORIGIN *
           DISP X,IN      DISP Y,IN      DISP Z,IN      ROT X,RAD      ROT Y,RAD
  ROT Z,RAD
```

```
              0.15191      0.0105807   -6.82576E-16    2.80090E-16   -2.07866E-16
 2.33627E-04

      * PILE TOP DISPLACEMENTS, GLOBAL *
                  DISP. X,IN   DISP. Y,IN   DISP. Z,IN   ROT. X,RAD   ROT. Y,RAD
ROT. Z,RAD
                 ***********  ***********  ***********  ***********  ***********
***********
      MINIMUM         0.1379     0.010581  -1.7488E-14   2.8009E-16  -2.0787E-16
2.3363E-04
      Pile N.         11            1            1            1            1
    1
      MAXIMUM         0.1659     0.010581   1.6123E-14   2.8009E-16  -2.0787E-16
2.3363E-04
      Pile N.          1            1           11            1            1
    1

      * PILE TOP REACTIONS, GLOBAL *
                  FOR. X,KIP   FOR. Y,KIP   FOR. Z,KIP MOM X,KIP-IN MOM Y,KIP-IN
MOM Z,KIP-IN
                 ***********  ***********  ***********  ***********  ***********
***********
      MINIMUM         166.69      -22.115  -3.0547E-12  -2.8634E-26  -1.7185E-25
-9.5776E-14
      Pile N.         11            1            1            1            1
    8
      MAXIMUM         194.72       23.377   3.6930E-12   2.8634E-26   1.7185E-25
   0.0000
      Pile N.          1           11           11           14           13
    1

      * PILE TOP DISPLACEMENTS, LOCAL *
                  DISP. x,IN   DISP. y,IN   DISP. z,IN   ROT. x,RAD   ROT. y,RAD
ROT. z,RAD
                 ***********  ***********  ***********  ***********  ***********
***********
      MINIMUM         0.1378    -0.012226    -0.010581   2.4212E-16  -2.5107E-16
2.0788E-16
      Pile N.         11           11            6           11           11
    6
      MAXIMUM         0.1619     0.037708   1.6123E-14   3.1045E-16   2.3363E-04
2.3363E-04
      Pile N.          1            1           11            1            6
    1

      * PILE TOP REACTIONS, LOCAL *
                  AXIAL,KIP    LAT. y,KIP   LAT. z,KIP MOM x,KIP-IN MOM y,KIP-IN
MOM z,KIP-IN
                 ***********  ***********  ***********  ***********  ***********
***********
```

```
      MINIMUM         168.27      -4.3384      -3.3505       0.0000  -9.5776E-14
   0.0000
      Pile N.         11           11            6            1            8
    1
      MAXIMUM         195.71       10.190   3.6930E-12       0.0000   1.7422E-25
   0.0000
      Pile N.          1            1           11            1           13
    1

      * EFFECTS FOR LATERALLY LOADED PILE *

     PILE     DISPL.      DISPL.      MOMENT      MOMENT       SHEAR       SHEAR
SOIL REACT  SOIL REACT     TOTAL
               y-DIR       z-DIR       z-DIR       y-DIR       y-DIR       z-DIR
  y-DIR       z-DIR      STRESS
                IN          IN        KIP-IN      KIP-IN        KIP         KIP
 KIP/IN      KIP/IN     KIP/IN**2
    ******  **********  **********  **********  **********  **********  **********
**********  **********  **********
      Min.   -0.012226   -0.010581     -97.301     -53.606     -4.1024     -3.0817
  -0.1208     -0.1287      5.9512
   Pile N.      11           6          11           6          11           6
   11           6          11
      Max.    0.037708  1.5657E-03      249.20      3.8567      9.5185      0.9190
   0.2757    0.025019      8.4542
   Pile N.       1           6           1           6           1           6
    1           6           1

     LOAD CASE :    11

     * TABLE L *   COMPUTATION ON PILE CAP

     * EQUIVALENT CONCENTRATED LOAD AT ORIGIN *
          LOAD X,KIP     LOAD Y,KIP     LOAD Z,KIP    MOM X,KIP-IN   MOM Y,KIP-IN
MOM Z,KIP-IN
               2577.77        44.6400       -32.9700        0.00000        50000.7
     10259.6

     * DISPLACEMENT OF GROUPED PILE FOUNDATION AT ORIGIN *
           DISP X,IN      DISP Y,IN      DISP Z,IN      ROT X,RAD      ROT Y,RAD
  ROT Z,RAD
               0.14441      0.0177850   -6.68251E-03   -4.61046E-06    1.87476E-04
 2.98851E-04

      * PILE TOP DISPLACEMENTS, GLOBAL *
                   DISP. X,IN   DISP. Y,IN   DISP. Z,IN   ROT. X,RAD   ROT. Y,RAD
ROT. Z,RAD
                  ***********  ***********  ***********  ***********  ***********
***********
      MINIMUM       0.092734     0.016955  -6.9591E-03  -4.6105E-06   1.8748E-04
```

```
2.9885E-04
       Pile N.         11            1           11            1            1
    1
       MAXIMUM         0.1961     0.018615  -6.4059E-03  -4.6105E-06   1.8748E-04
2.9885E-04
       Pile N.          5            5            1            1            1
    1

       * PILE TOP REACTIONS, GLOBAL *
                    FOR. X,KIP   FOR. Y,KIP   FOR. Z,KIP MOM X,KIP-IN MOM Y,KIP-IN
MOM Z,KIP-IN
                  ***********  ***********  ***********  ***********  ***********
***********
       MINIMUM         116.97      -25.763      -2.4756  -1.5742E-14  -3.2947E-13
-1.9155E-13
       Pile N.         11            5            6           12            6
    7
       MAXIMUM         226.93       28.826      -0.9723   1.5742E-14   9.4474E-14
1.9155E-13
       Pile N.          5           15            5           13           12
   10

       * PILE TOP DISPLACEMENTS, LOCAL *
                    DISP. x,IN   DISP. y,IN   DISP. z,IN   ROT. x,RAD   ROT. y,RAD
ROT. z,RAD
                  ***********  ***********  ***********  ***********  ***********
***********
       MINIMUM       0.094260  -7.9727E-03    -0.018615  -3.5361E-05   1.8417E-04
-1.8748E-04
       Pile N.         11           15           10            1            1
    6
       MAXIMUM         0.1904     0.050590  -6.4059E-03   2.6266E-05   2.9885E-04
2.9885E-04
       Pile N.          5            5            1           11            6
    1

       * PILE TOP REACTIONS, LOCAL *
                    AXIAL,KIP    LAT. y,KIP   LAT. z,KIP MOM x,KIP-IN MOM y,KIP-IN
MOM z,KIP-IN
                  ***********  ***********  ***********  ***********  ***********
***********
       MINIMUM         118.72      -3.2470      -4.3362       0.0000  -1.9155E-13
-4.1183E-14
       Pile N.         11           15           10            1            7
   12
       MAXIMUM         228.08       11.886      -0.9723       0.0000   1.9155E-13
3.2947E-13
       Pile N.          5            5            5            1           10
    6
```

```
      * EFFECTS FOR LATERALLY LOADED PILE *

     PILE     DISPL.      DISPL.      MOMENT      MOMENT       SHEAR       SHEAR
SOIL REACT  SOIL REACT     TOTAL
               y-DIR       z-DIR       z-DIR       y-DIR       y-DIR       z-DIR
  y-DIR       z-DIR      STRESS
                IN          IN        KIP-IN      KIP-IN        KIP         KIP
 KIP/IN      KIP/IN     KIP/IN**2
    ******  **********  **********  **********  **********  **********  **********
**********  **********  **********
      Min. -7.9727E-03   -0.018615     -71.177     -73.731     -3.0781     -3.9666
  -0.1013     -0.1570      4.1989
   Pile N.      15          10          15          10          15          10
   15          10          11
      Max.    0.050590  2.6574E-03      302.33      5.5444      11.087      1.1014
   0.3199    0.022312      9.9665
   Pile N.       5          10           5          10           5          10
    5          12           5

     LOAD CASE :    12

     * TABLE L *   COMPUTATION ON PILE CAP

     * EQUIVALENT CONCENTRATED LOAD AT ORIGIN *
          LOAD X,KIP     LOAD Y,KIP     LOAD Z,KIP    MOM X,KIP-IN   MOM Y,KIP-IN
MOM Z,KIP-IN
               2774.08        44.6400       -32.9700        0.00000        40577.8
     10259.6

     * DISPLACEMENT OF GROUPED PILE FOUNDATION AT ORIGIN *
           DISP X,IN      DISP Y,IN      DISP Z,IN      ROT X,RAD      ROT Y,RAD
  ROT Z,RAD
               0.15632      0.0185770   -6.97586E-03   -1.79585E-06    1.52271E-04
 3.01435E-04

       * PILE TOP DISPLACEMENTS, GLOBAL *
                   DISP. X,IN   DISP. Y,IN   DISP. Z,IN   ROT. X,RAD   ROT. Y,RAD
ROT. Z,RAD
                  ***********  ***********  ***********  ***********  ***********
***********
       MINIMUM         0.1108     0.018254  -7.0836E-03  -1.7958E-06   1.5227E-04
3.0144E-04
       Pile N.         11            1           11            1            1
    1
       MAXIMUM         0.2018     0.018900  -6.8681E-03  -1.7958E-06   1.5227E-04
3.0144E-04
       Pile N.          5            5            1            1            1
    1

       * PILE TOP REACTIONS, GLOBAL *
```

```
                    FOR. X,KIP   FOR. Y,KIP   FOR. Z,KIP MOM X,KIP-IN MOM Y,KIP-IN
MOM Z,KIP-IN
                   ***********  ***********  ***********  ***********  ***********
***********
       MINIMUM         137.42      -26.674      -2.5030  -1.5742E-14  -3.2947E-13
-1.9155E-13
       Pile N.         11            5            6            5            7
    7
       MAXIMUM         233.25       29.689      -1.0295   1.5742E-14   3.2947E-13
3.2947E-13
       Pile N.          5           15            5            4           10
   15

       * PILE TOP DISPLACEMENTS, LOCAL *
                    DISP. x,IN   DISP. y,IN   DISP. z,IN   ROT. x,RAD   ROT. y,RAD
ROT. z,RAD
                   ***********  ***********  ***********  ***********  ***********
***********
       MINIMUM         0.1123  -8.5821E-03    -0.018900  -2.6799E-05   1.4991E-04
-1.5227E-04
       Pile N.         11           15           10            1            1
    6
       MAXIMUM         0.1960     0.051814  -6.8681E-03   2.3256E-05   3.0144E-04
3.0144E-04
       Pile N.          5            5            1           11            6
    1

       * PILE TOP REACTIONS, LOCAL *
                    AXIAL,KIP    LAT. y,KIP   LAT. z,KIP MOM x,KIP-IN MOM y,KIP-IN
MOM z,KIP-IN
                   ***********  ***********  ***********  ***********  ***********
***********
       MINIMUM         139.30      -3.3958      -4.3549       0.0000  -1.9155E-13
-3.2947E-13
       Pile N.         11           15           10            1            7
   10
       MAXIMUM         234.46       12.025      -1.0295       0.0000   9.5776E-14
3.2947E-13
       Pile N.          5            5            5            1            4
    7

       * EFFECTS FOR LATERALLY LOADED PILE *

     PILE     DISPL.      DISPL.      MOMENT      MOMENT       SHEAR       SHEAR
SOIL REACT  SOIL REACT     TOTAL
               y-DIR       z-DIR       z-DIR       y-DIR       y-DIR       z-DIR
  y-DIR       z-DIR      STRESS
                IN          IN        KIP-IN      KIP-IN        KIP         KIP
 KIP/IN      KIP/IN     KIP/IN**2
    ******  **********  **********  **********  **********  **********  **********
```

```
**********  **********  **********
      Min. -8.5821E-03   -0.018900     -74.874     -74.222     -3.2181     -3.9828
  -0.1054     -0.1575      4.9266
   Pile N.      15          10          15          10          15          10
   15          10          11
      Max.    0.051814  2.6931E-03      307.11      5.5762      11.217      1.1043
   0.3236    0.022752      10.225
   Pile N.       5          10           5          10           5          10
    5          11           5
```

PILE FOUNDATION ANALYSIS

SUMMARY OF GROUP RESULTS

P-MULTIPLIERS

GROUP ANALYSIS

DEPTH TO FIXITY

FIXED CASE - Ly

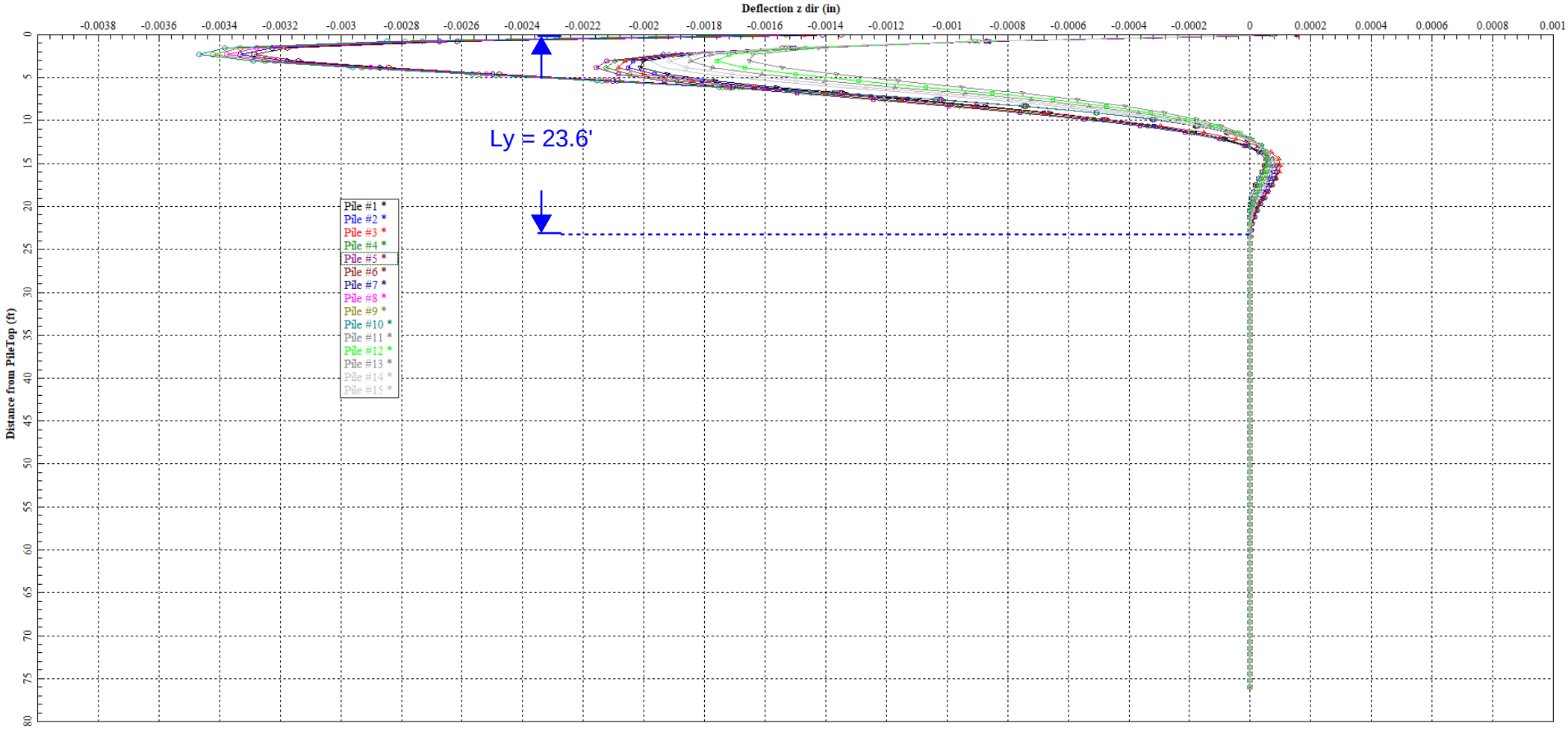

FIXED CASE - Lz

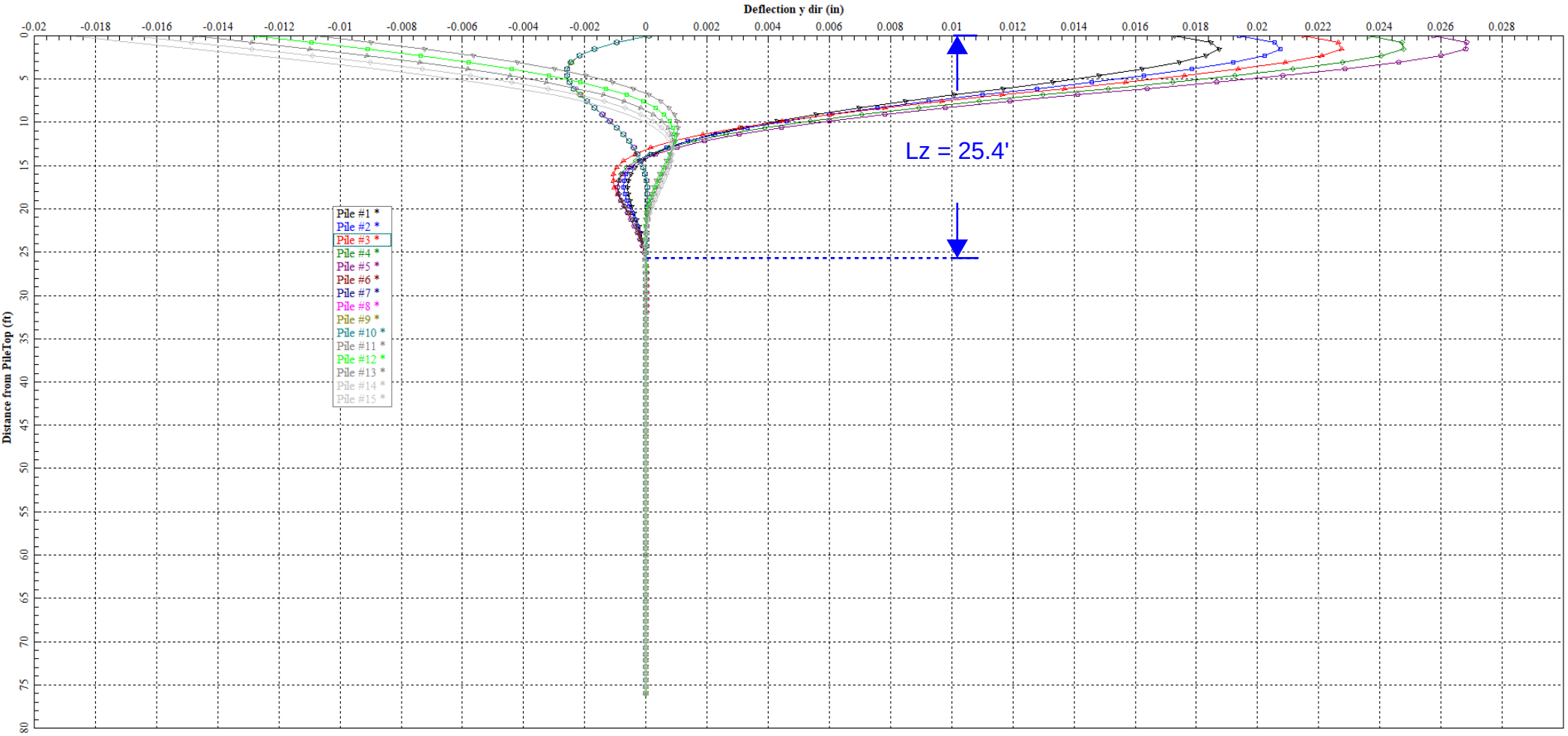

PINNED CASE - Ly

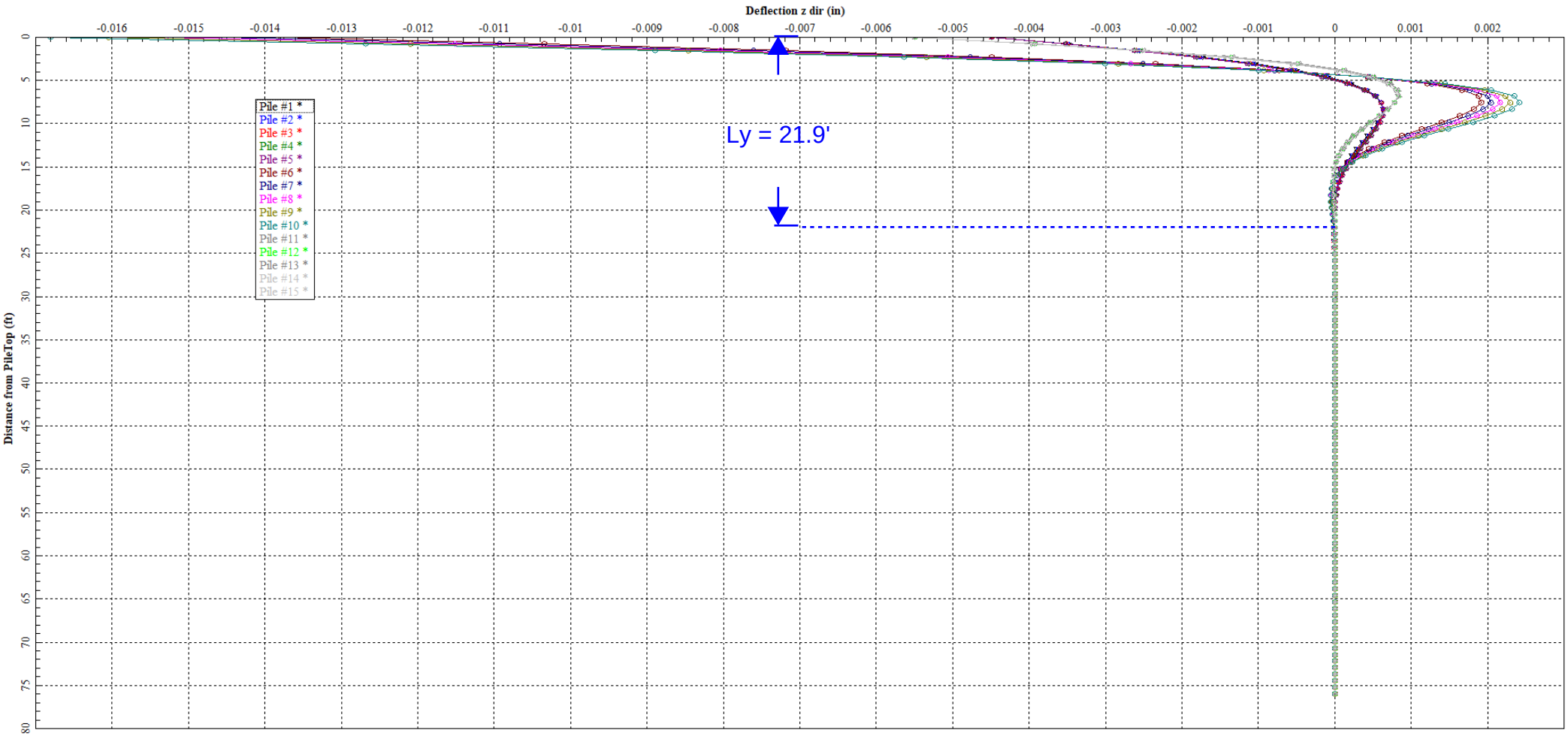

PINNED CASE - Lz

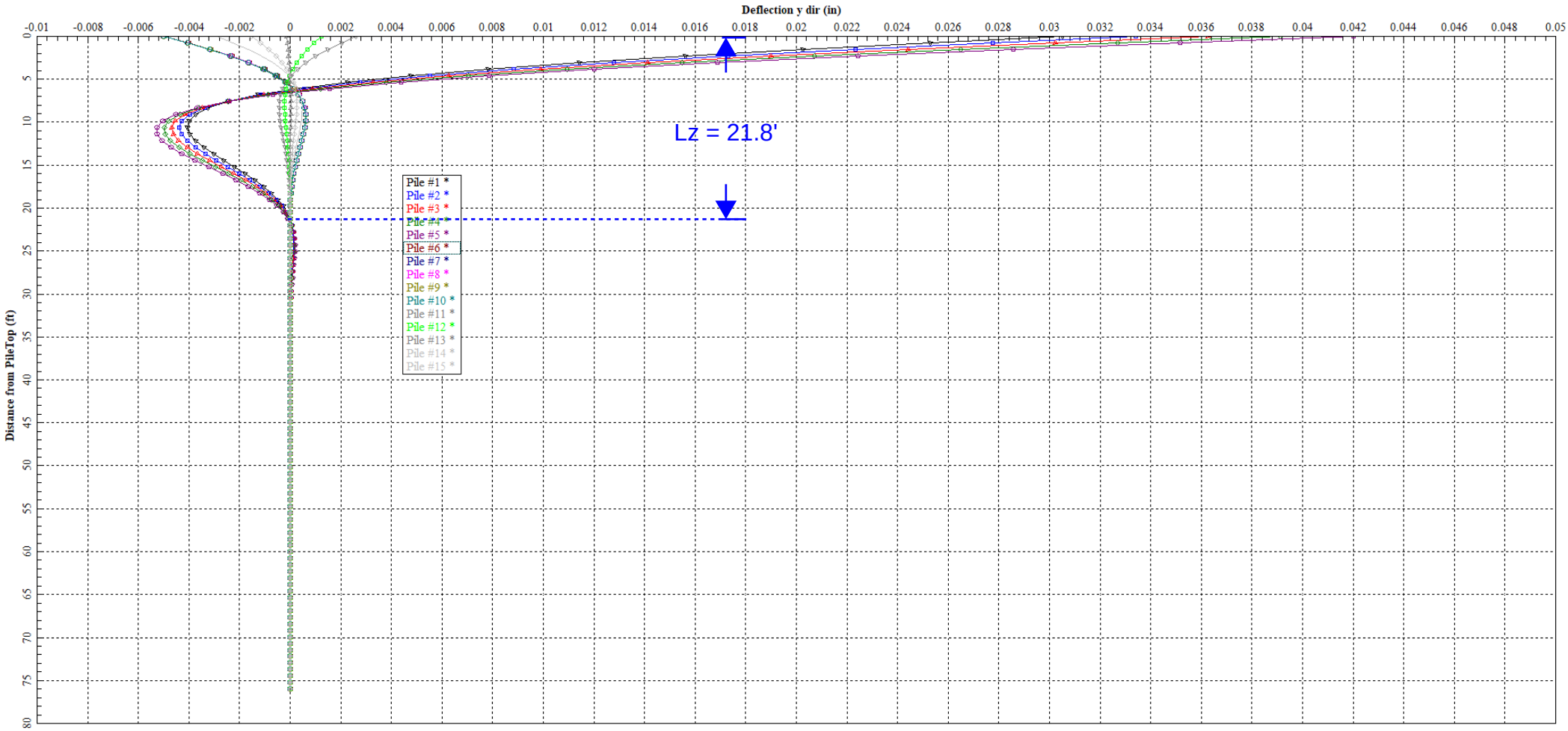

APPENDIX D.3 PILE SPECIFICATIONS

HP

Steel H-Pile

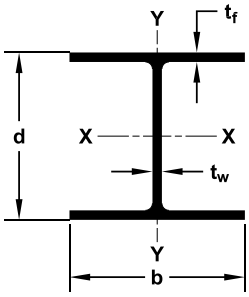

SECTION	Weight lb/ft (kg/m)	Area in² (cm²)	Depth d in (mm)	Flange Width b in (mm)	THICKNESS Flange (t_f) in (mm)	THICKNESS Web (t_w) in (mm)	Coating Area ft²/ft (m²/m)	PROPERTIES AXIS X-X I in⁴ (cm⁴)	AXIS X-X S in³ (cm³)	AXIS X-X Z in³ (cm³)	AXIS X-X r in (cm)	AXIS Y-Y I in⁴ (cm⁴)	AXIS Y-Y S in³ (cm³)	AXIS Y-Y Z in³ (cm³)	AXIS Y-Y r in (cm)
HP 8 HP 200	36 54	10.6 68.4	8.02 204	8.16 207	0.445 11.3	0.445 11.3	3.92 1.19	119 4953	29.8 488	33.6 550.6	3.36 8.53	40.3 1677	9.88 162	15.2 249.1	1.95 4.95
HP 10 HP 250	42 63	12.4 80.0	9.70 246	10.10 257	0.420 10.7	0.415 10.5	4.83 1.47	210 8741	43.4 711	48.3 791.5	4.13 10.5	71.7 2984	14.2 233	21.8 357.2	2.41 6.12
	57 85	16.7 108	9.99 254	10.20 259	0.565 14.4	0.565 14.4	4.91 1.50	294 12237	58.8 964	66.5 1089.7	4.18 10.6	101 4204	19.7 323	30.3 496.5	2.45 6.22
HP 12 HP 310	53 79	15.5 100	11.80 300	12.00 305	0.435 11.0	0.435 11.0	5.82 1.77	393 16358	66.7 1093	74.0 1212.6	5.03 12.8	127 5286	21.1 346	32.2 527.7	2.86 7.26
	63 94	18.4 119	11.90 302	12.10 307	0.515 13.1	0.515 13.1	5.86 1.79	472 19646	79.1 1296	88.3 1447.0	5.06 12.9	153 6368	25.3 415	38.7 634.2	2.88 7.32
	74 110	21.8 141	12.10 307	12.20 310	0.610 15.5	0.605 15.4	5.91 1.80	569 23683	93.8 1537	105 1720.6	5.11 13.0	186 7742	30.4 498	46.6 763.6	2.92 7.42
	84 125	24.6 159	12.30 312	12.30 312	0.685 17.4	0.685 17.4	5.97 1.82	650 27055	106 1737	120 1966.4	5.14 13.1	213 8866	34.6 567	53.2 871.8	2.94 7.47
	89 132	25.9 167	12.36 314	12.32 313	0.720 18.3	0.720 18.3	6.04 1.84	689 28700	111.6 1830	126.3 2070	5.16 13.1	225 9370	36.5 599	56.2 922	2.94 7.48
	102 152	29.9 193	12.56 319	12.64 321	0.819 20.8	0.819 20.8	6.17 1.88	811 33800	129.3 2120	147.6 2420	5.20 13.2	276 11500	43.7 716	67.1 1100	3.04 7.71
	117 174	34.4 222	12.76 324	12.87 327	0.929 23.6	0.929 23.6	6.26 1.91	946 39400	148.2 2430	170.8 2800	5.24 13.3	331 13800	51.4 843	79.3 1300	3.11 7.89
HP 14 HP 360	73 109	21.4 138	13.60 345	14.60 371	0.505 12.8	0.505 12.8	6.96 2.12	729 30343	107 1753	118 1933.7	5.84 14.8	261 10864	35.8 587	54.6 894.7	3.49 8.86
	89 132	26.1 168	13.80 351	14.70 373	0.615 15.6	0.615 15.6	7.02 2.14	904 37627	131 2147	146 2392.5	5.88 14.9	326 13569	44.3 726	67.7 1109.4	3.53 8.97
	102 152	30.1 194	14.00 356	14.80 376	0.705 17.9	0.705 17.9	7.06 2.15	1050 43704	150 2458	169 2769.4	5.92 15.0	380 15817	51.4 842	78.8 1291.3	3.56 9.04
	117 174	34.4 222	14.20 361	14.90 378	0.805 20.4	0.805 20.4	7.12 2.34	1220 50780	172 2819	194 3179.1	5.96 15.1	443 18439	59.5 975	91.4 1497.8	3.59 9.12
HP 16 HP 410	88 131	25.8 167	15.30 389	15.70 399	0.540 13.7	0.540 13.7	7.52 2.29	1110 46201	145 2376	161 2638.3	6.56 16.7	349 14526	44.5 729	68.2 1117.6	3.68 9.35
	101 150	29.9 193	15.50 394	15.80 401	0.625 15.9	0.625 15.9	7.56 2.30	1300 54110	168 2753	187 3064.4	6.59 16.7	412 17149	52.2 855	80.1 1312.6	3.71 9.42
	121 180	35.8 231	15.80 401	15.90 404	0.750 19.1	0.750 19.1	7.62 2.32	1590 66180	201 3294	226 3703.5	6.66 16.9	504 20978	63.4 1039	97.6 1599.4	3.75 9.53
	141 210	41.7 269	16.00 406	16.00 406	0.875 22.2	0.875 22.2	7.69 2.34	1870 77835	234 3835	264 4326.2	6.70 17.0	599 24932	74.9 1227	116 1900.9	3.79 9.63
	162 241	47.7 308	16.30 414	16.10 409	1.000 25.4	1.000 25.4	7.75 2.36	2190 91154	269 4408	306 5014.4	6.78 17.2	697 29011	86.6 1419	134 2195.9	3.82 9.70
	183 272	54.1 349	16.50 419	16.30 414	1.130 28.7	1.130 28.7	7.81 2.38	2510 104473	304 4982	349 5719.1	6.81 17.3	818 34047	100.0 1639	156 2556.4	3.89 9.88
HP 18 HP 460	135 201	39.9 257	17.50 445	17.80 452	0.750 19.1	0.750 19.1	8.54 2.60	2200 91570	251 4113	281 4604.7	7.43 18.9	706 29386	79.3 1299	122 1999.2	4.21 10.7
	157 234	46.2 298	17.70 450	17.90 455	0.870 22.1	0.870 22.1	8.60 2.62	2570 106971	290 4752	327 5358.5	7.46 18.9	833 34672	93.1 1526	143 2343.3	4.25 10.8
	181 269	53.2 343	18.00 457	18.00 457	1.000 25.4	1.000 25.4	8.66 2.64	3020 125701	336 5506	379 6210.7	7.53 19.1	974 40541	108.0 1770	167 2736.6	4.28 10.9
	204 304	60.2 388	18.30 465	18.10 460	1.130 28.7	1.130 28.7	8.73 2.66	3480 144847	380 6227	433 7095.6	7.60 19.3	1120 46618	124.0 2032	191 3129.9	4.31 11.0

Technical Hotline: 1-866-875-9546 | engineering@nucorskyline.com

HP

Steel H-Pile

Available Steel Grades

AMERICAN			CANADIAN			EUROPEAN**		
ASTM	YIELD STRENGTH		CSA G40.21	YIELD STRENGTH		EN 10034	YIELD STRENGTH	
	ksi	MPa		ksi	MPa		ksi	MPa
A36	36	250	**Grade 300 W**	44	300	**HISTAR 355**	51	355
A572 Grade 50	50	345	**Grade 350 W**	50	350	**HISTAR 420**	61	420
A572 Grade 60	60	415				**HISTAR 460**	67	460
A588	50	345						
A690	50	345						
A709	50	345						

Highlighted fields represent the most commonly used and readily available steel grades. ** HISTAR only available in some sizes.

Splicer and H-Pile Point

Splicer

H-Pile Point

Delivery Conditions & Tolerances

	ASTM A6	
Mass	± 2.5%	
Length§		
30 Feet and Under	± 0.375 inches	
Over 30 Feet	+ (0.375 inches + (length - 30)/80)	– 0.375 inches
Depth	± 0.125 inches	– 0.1875 inches
Flange Width	+ 0.25 inches	
Flanges out of Square		
HP 8 x 42 - HP 12 x 84	≤ 0.25 inches	
HP 14 x 73 - HP 14 x 117	≤ 0.3125 inches	
Web off Center	≤ 0.1875 inches	
Greatest Depth over Theoretical	≤ 0.25 inches	
Camber and Sweep***		
45 Feet and Under	(0.125")(Length in feet/10) but not over 0.375"	
Over 45 Feet	(0.375") + (0.125" (Length in feet - 45)/10)	

§ For HP ordered as bearing piles, length tolerances are +5 in. and -0 in.

***For the HP 10 x 42, 12 x 53, 12 x 63, 14 x 73, and 14 x 89 ordered as columns, tolerances are subject to negotiation with manufacturer.

Maximum Rolled Lengths†

HP	130’	39.6 m

† Longer lengths may be possible upon request.

Technical Hotline: 1-866-875-9546 | engineering@nucorskyline.com

www.nucorskyline.com

HARD-BITE™ – HP-77750-B

Dimensions

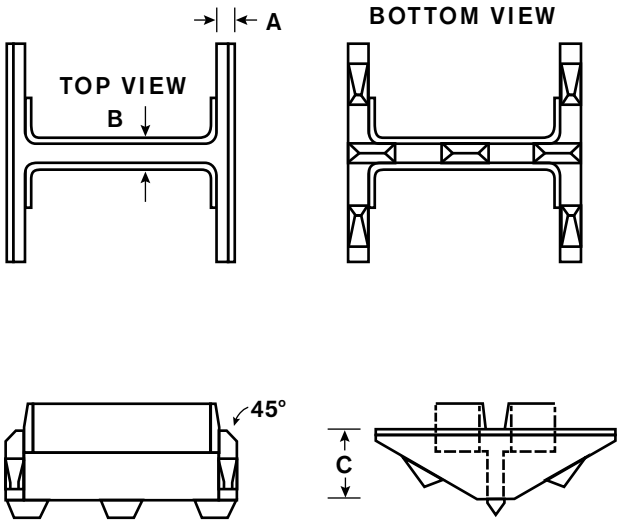

MATERIAL: CAST STEEL

ASTM A148 90/60

	10”	12”	14”
A	3/4”	3/4”	1”
B	1-3/8”	1-1/2”	1-5/8”
C	3”	3-1/2”	4”
Wt.	19#	25#	42#

NORMAL FOUNDRY TOLERANCES APPLY

Installation Instructions

1. Fit point onto the end of the square cut pile end.
2. Weld point to the pile in either flat or vertical position using E70XX electrodes or equivalent filler material.
3. Weld across full width of flange following chart below for minimum size weld.

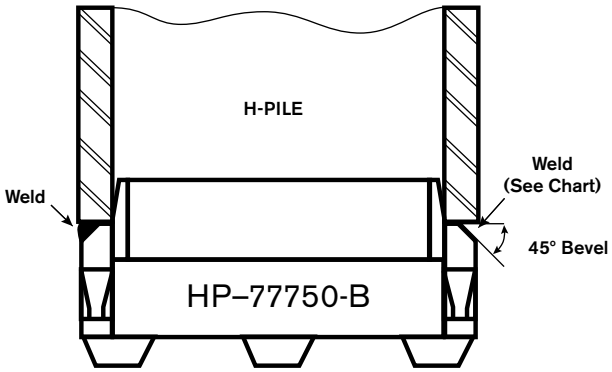

Pile Size	Flange Thickness	Groove Weld
HP 14 x 117	.805	7/16
x 102	.705	3/8
x 89	.615	3/8
x 73	.505	5/16
HP 12 x 102	.820	3/8
x 84	.685	3/8
x 74	.610	3/8
x 63	.515	5/16
x 53	.435	5/16
HP 10 x 57	.565	5/16
x 42	.420	5/16

ASSOCIATED PILE & FITTING

45 Samworth Road, Clifton, NJ 07014
Tel: 973-773-8400
Fax: 973-773-8442
email: apf@associatedpile.com
www.associatedpile.com
Call Toll Free: 800-526-9047