NEW YORK STATE THRUWAY AUTHORITY

STANDARD SHEETS

NOTE: INDIVIDUAL STANDARD SHEETS IN THIS BOOK BECOME PART OF A CONTRACT BY REFERENCE TO THE SHEET NUMBER IN THE PROJECT PLANS OR PROPOSAL. THIS ENTIRE BOOK IS OFFICIALLY FINALIZED AND ADOPTED AS OF THE DATE SHOWN ON THIS COVER.

NEW YORK STATE OF OPPORTUNITY. | Thruway Authority

ANDREW M. CUOMO
Governor

JOANNE M. MAHONEY
Chair

MATTHEW J. DRISCOLL
Executive Director

U.S. CUSTOMARY UNITS

DEPARTMENT OF ENGINEERING
OFFICE OF DESIGN SUPPORT SERVICES
May 1, 2020

New York State Thruway Authority Standard Sheets

SHEET NO.	SUBJECT	ISSUED BY	EFFECTIVE
TA 201-01	Clearing and Grubbing *(Dwg. CG)*	DB 18-006	01/01/2019
TA 203-01	Shoulder Backup 1R Projects *(Dwg. SB)*	DB 18-001	05/01/2018
TA 203-02	Slope Flattening Details	DB 17-001	07/01/2017
TA 402-01	Highway Pavement Repair Details *(Dwg. PRD)*	DB 18-001	05/01/2018
TA 402-02	Bridge Deck Wearing Course Resurfacing *(Dwg. BDR)*	EI 16-001	01/01/2017
TA 402-03	Overhead Bridge Underclearance Improvement *(Dwg. BU)*	DB 18-005	11/01/2018
TA 603-01	Culvert Extension Details	DB 17-006	01/01/2018
TA 605-01	Underdrain Details	DB 20-001	05/01/2020
TA 606-01	Modified Thrie Beam (Mod.) Guiderail *(Dwg. GR-1)*	DB 18-006	01/01/2019
TA 606-02	Modified G2 Corrugated Rail and HPBO Rail Transitions into Existing Corrugated Guiderail Systems (Maintenance Support) *(Dwg. GR-3)*	DB 18-005	11/01/2018
TA 606-03	Corrugated Median Barrier to MG2 Corrugated Beam Guide Railing Transition Detail D *(Dwg. GR-4)*	EI 16-001	01/01/2017
TA 606-04	Box Beam to 42" Single Slope Half Section Concrete Barrier Pier Protection *(Dwg. GR-5)*	DB 18-005	11/01/2018
TA 606-05	HPBO (Mod.) Corrugated Beam to 42" Single Slope Half Section Concrete Barrier Pier Protection *(Dwg. GR-6)*	DB 18-005	11/01/2018
TA 606-06	Typical U-Turn Median Rail Layout and Roadway Transverse Section	DB 19-002	01/01/2020
TA 606-07	Modified Thrie Beam Guiderail with Rock Rail (Sheets 1-2)	DB 18-006	01/01/2019
TA 611-01	Living Snow Fences	EI 16-001	01/01/2017
TA 619-01	Work Zone Traffic Control Tables & Legend	EI 16-001	01/01/2017
TA 619-02	General Work Zone Traffic Control Notes & Channelizing Devices	DB 19-001	05/01/2019
TA 619-03	Shoulder Closure Short-Term or Intermediate-Term Stationary	DB 18-003	09/01/2018
TA 619-04	Shoulder Closure Short-Duration Stationary and Mobile	DB 18-003	09/01/2018
TA 619-05	Signing & Delineation for Shoulder Work Spaces with Temporary Concrete Barrier	DB 19-001	05/01/2019
TA 619-06	Work Beyond Shoulder	DB 18-005	11/01/2018
TA 619-07	Be Prepared to Stop and Uneven Lanes Signing	DB 19-001	05/01/2019
TA 619-08	Single Lane Closure Short- or Intermediate-Term Stationary: 65 MPH Zone	DB 19-001	05/01/2019
TA 619-09	Double Lane Closure Short- or Intermediate-Term Stationary: 65 MPH Zone	DB 19-001	05/01/2019
TA 619-10	Center Lane Closure Short- or Intermediate-Term Stationary: 65 MPH Zone	DB 19-001	05/01/2019
TA 619-11	Lane Shift: 65 MPH Zone	DB 19-001	05/01/2019
TA 619-12	Single Lane Closure Short- or Intermediate-Term Stationary: 55 MPH Zone	DB 19-001	05/01/2019
TA 619-13	Double Lane Closure Short- or Intermediate-Term Stationary: 55 MPH Zone	DB 19-001	05/01/2019
TA 619-14	Center Lane Closure Short- or Intermediate-Term Stationary: 55 MPH Zone	DB 19-001	05/01/2019
TA 619-15	Lane Shift: 55 MPH Zone	DB 19-001	05/01/2019
TA 619-16	Work Zone Traffic Control at Interchanges, Service Areas and Parking Areas	DB 19-001	05/01/2019
TA 619-17	Work Zone Traffic Control for Miscellaneous Operations	DB 19-001	05/01/2019
TA 619-18	Mobile Lane Closure	DB 19-001	05/01/2019
TA 619-19	Mobile Lane Closure: Narrow Shoulder Area	DB 19-001	05/01/2019
TA 619-20	Short-Duration Lane Closure	DB 19-001	05/01/2019
TA 619-21	Short-Duration Double Lane Closure	DB 19-001	05/01/2019
TA 619-22	Work Zone Traffic Control Guide for Pavement Striping Operations	DB 19-001	05/01/2019
TA 619-23	Mobile Lane Closure for Pavement Striping Operations	DB 19-001	05/01/2019
TA 619-24	Mobile Lane Closure for Pavement Striping Operations: Narrow Shoulder Area	DB 19-001	05/01/2019
TA 619-25	Work Zone Traffic Control for Pavement Striping Operations at Interchanges, Service Areas and Parking Areas	DB 19-001	05/01/2019
TA 619-26	Temporary Rock Catchment Barrier (Sheets 1-3)	DB 19-001	05/01/2019
TA 619-30	New York Division Traffic Management Tables (Sheets 1-26)	DB 19-001	05/01/2019
TA 619-31	Albany Division 1,150 Veh/Hr/Lane Traffic Management Tables (Sheets 1-18)	DB 18-003	09/01/2018
TA 619-32	Syracuse Division 1,150 Veh/Hr/Lane Traffic Management Tables (Sheets 1-18)	DB 18-003	09/01/2018
TA 619-33	Buffalo Division 1,150 Veh/Hr/Lane Traffic Management Tables (Sheets 1-37)	DB 18-003	09/01/2018
TA 619-34	*Vacant*	DB 17-001	01/01/2017
TA 619-35	Albany Division 1,300 Veh/Hr/Lane Traffic Management Tables (Sheets 1-18)	DB 18-003	09/01/2018
TA 619-36	Syracuse Division 1,300 Veh/Hr/Lane Traffic Management Tables (Sheets 1-18)	DB 18-003	09/01/2018
TA 619-37	Buffalo Division 1,300 Veh/Hr/Lane Traffic Management Tables (Sheets 1-37)	DB 18-003	09/01/2018
TA 625-01	ROW and Survey Markers	EI 16-001	01/01/2017
TA 645-01	Wrong Way Deterrence Sign	DB 18-003	09/01/2018
TA 646-01	Reference Marker Details (Sheets 1-2)	DB 18-006	01/01/2019
TA 670-01	Fiber Optic & Backbone Handhole Relocation Details	DB 17-001	07/01/2017
TA 680-01	Inductance Loop Installation	DB 18-001	05/01/2018
TA 680-02	Highway Advisory Radio (Sheets 1-9)	EI 16-001	01/01/2017
TA 685-01	Pavement Marking Details: Asphalt and Concrete Pavement (Sheets 1-2)	DB 18-001	05/01/2018
TA 685-02	Pavement Marking Details: Tapered Acceleration and Deceleration Lanes	DB 18-005	11/01/2018
TA 685-03	Toll Island Gore and Crosswalk Striping Details	EI 16-001	01/01/2017
TA 685-04	Temporary Pavement Marking Details	DB 18-002	07/01/2018
TA 690-01	Loop and Treadle Plan (Sheets 1-2)	DB 17-001	07/01/2017
TA 690-02	Toll Lane Slab Reinforcement Plan	DB 17-001	07/01/2017
TA 690-03	10 ft Treadle Frame (Sheets 1-4)	DB 19-002	01/01/2020

The officially adopted New York State Thruway Authority Standard Sheets book is available on the Thruway Authority's website at:
http://www.thruway.ny.gov/business/contractors/standard-sheets/index.shtml

NEW YORK STATE OF OPPORTUNITY. | Thruway Authority

U.S. CUSTOMARY STANDARD SHEET

INDEX OF STANDARD SHEETS ISSUED 05/01/2020

APPROVED MAY 1, 2020

/S/ PATRICK THOMPSON, P.E.
DIRECTOR DESIGN SUPPORT SERVICES BUREAU

ISSUED UNDER DB 20-001

I-1

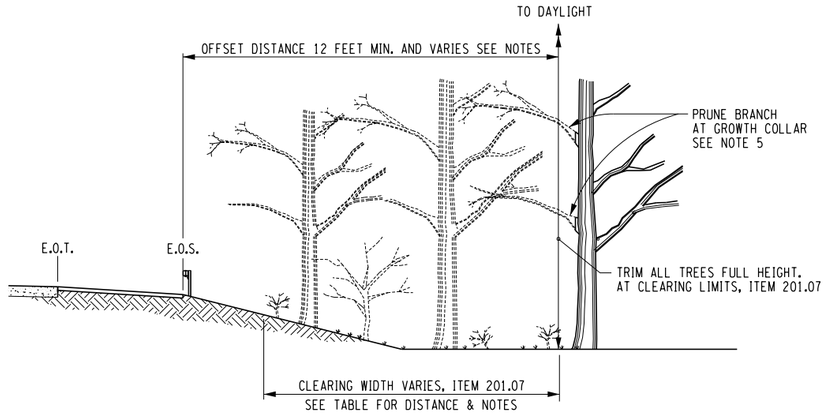

CLEARING AND GRUBBING BEHIND GUIDE RAIL

CLEARING AND GRUBBING – ITEM 201.07

DETAIL A

N.T.S.

SEE NOTE 1

E.O.T. = EDGE OF TRAVELED WAY
E.O.S. = EDGE OF SHOULDER

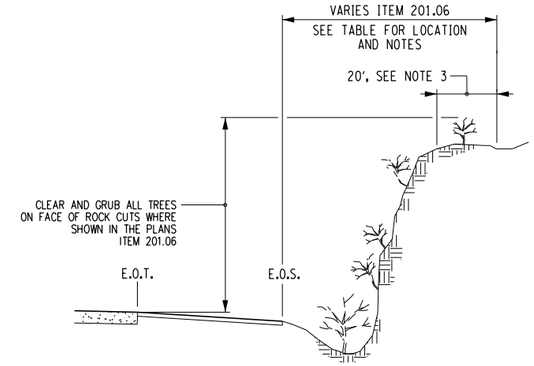

CLEARING AND GRUBBING ON ROCK SLOPES

DETAIL C

N.T.S.

SEE NOTES 3 AND 4

E.O.T. = EDGE OF TRAVELED WAY
E.O.S. = EDGE OF SHOULDER

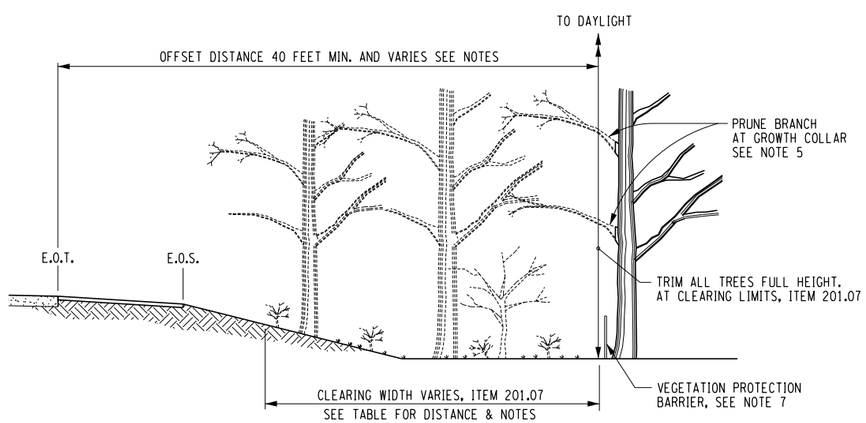

CLEARING DETAIL – EARTH SLOPE

CLEARING AND GRUBBING – ITEM 201.07

DETAIL B

N.T.S.

SEE NOTES 1 AND 2

E.O.T. = EDGE OF TRAVELED WAY
E.O.S. = EDGE OF SHOULDER

NOTES:

1. DETAILS "A" AND "B" APPLY TO ALL ROADSIDE AREAS WITHIN THE WORK LIMITS. ADDITIONAL AREAS OF CLEARING AND GRUBBING MAY BE INDICATED ELSEWHERE IN THE CONTRACT DOCUMENTS.
2. GRUBBING WILL BE REQUIRED BENEATH PROPOSED EMBANKMENT AREAS ONLY. WHERE TREES OR EXISTING STUMPS ARE CLEARED AND GRUBBING IS NOT REQUIRED, THE TREE TRUNK OR EXISTING STUMP SHALL BE FLUSH CUT. EXPOSED STUMPS NOT REQUIRED TO BE REMOVED, BUT WHICH ARE WITHIN 30 FEET OF THE EDGE OF THE PAVEMENT, SHALL BE CHIPPED OUT TO A DEPTH OF NOT LESS THAN 6 INCHES BELOW THE FINISHED GRADE WITH HOLES BACK FILLED AS DIRECTED BY THE ENGINEER. NO SEPARATE PAYMENT WILL BE MADE FOR BACKFILL OR EARTH COVER NECESSARY TO COMPLETE THIS WORK. GRASS SHALL BE ESTABLISHED ON STUMP HOLES AND WILL BE PAID SEPARATELY.
3. DETAIL "C", CLEAR & GRUB ALL TREES AND BRUSH ON FACE OF ROCK CUTS. CLEAR 20' MINIMUM ON TOP OF ROCK CUTS, OR TO R.O.W. BOUNDARY WHERE LESS THAN 20'. ALL STUMPS SHALL BE FLUSH CUT.
4. IN ALL SITUATIONS, THE PAY LIMIT SHALL BE THE AREA ACTUALLY CLEARED.
5. ALL BRANCHES TRIMMED WITHIN THE OFFSET DISTANCE SHALL BE PRUNED AS CLOSE TO THE TRUNK'S GROWTH COLLAR AS POSSIBLE.
6. CONTRACTOR IS RESPONSIBLE FOR LIMITING DISTURBED AREAS DURING ALL CLEARING AND GRUBBING/TRIM CANOPY (TREE PRUNING) OPERATIONS. THESE PROPOSED AREAS ARE NOT EVALUATED AS DISTURBED AREAS FOR A NEW YORK STATE DEPARTMENT OF ENVIRONMENTAL (SPDES) GENERAL PERMIT FOR STORM WATER DISCHARGES FROM CONSTRUCTION ACTIVITIES. ALL DISTURBED AREAS RESULTING FROM CLEARING AND GRUBBING CONSTRUCTION ACTIVITIES SHALL BE RESTORED AS DIRECTED BY THE ENGINEER. COST FOR THIS WORK IS TO BE INCLUDED IN THE CLEARING AND GRUBBING ITEM.
7. TREE REMOVAL SHALL BE COMPLETED BY EITHER CLEARING AND GRUBBING OR CLEARING, FLUSH CUTTING METHODS, AS INDICATED ON PLANS. WHOLESALE CLEARING AND GRUBBING OF TREES SHALL NOT BE ALLOWED IN WETLANDS. THE CONTRACTOR SHALL TAKE CARE NOT TO FURTHER IMPACT STATE AND FEDERAL WETLANDS BEYOND WHAT IS REASONABLY NECESSARY TO CONDUCT CLEARING AND GRUBBING AND SELECTIVE TREE REMOVAL ACTIVITIES. ALL WETLAND AREAS SHOWN ON PLANS ADJACENT TO AND OUTSIDE OF CLEARING AND GRUBBING ZONES AND SELECTIVE TREE LOCATIONS SHALL BE LEFT UNDISTURBED TO PREVENT FURTHER IMPACTS, UNLESS OTHERWISE ALLOWED BY A PROJECT SPECIFIC ARMY CORP OF ENGINEERS OR NYSDEC WETLAND PERMIT. ACTIVITIES NOT TO ENCROACH ON ADJACENT WETLANDS INCLUDE, BUT NOT LIMITED TO, MOVEMENT OF VEHICLES, CONSTRUCTION STAGING, DISPOSAL OF WOOD CHIPPINGS, PLACEMENT OF EROSION CONTROL FEATURES, AND SPREADING OF SPOILED SOIL. VEGETATION PROTECTION BARRIER FENCING, MAY BE NECESSARY IF THE ADJACENT AREAS ARE DEEMED ENVIRONMENTALLY SENSITIVE, A.O.B.E.
8. ALL PROVISIONS OF SECTION 201 - CLEARING AND GRUBBING, NOT MODIFIED BY THIS DRAWING, SHALL APPLY.
9. INDIVIDUAL TREE REMOVAL LISTED IN THE CONTRACT DOCUMENTS WILL BE PAID FOR UNDER ITEM 614.06XXYY. STUMPS LISTED FOR REMOVAL SHALL BE BACKFILLED TO FINISHED GRADE WITH TOPSOIL UNLESS OTHERWISE SPECIFIED IN THE CONTRACT DOCUMENTS.

NEW YORK STATE OF OPPORTUNITY. | Thruway Authority

U.S. CUSTOMARY STANDARD SHEET

CLEARING AND GRUBBING
(DRAWING CG)

APPROVED JANUARY 1, 2019	ISSUED UNDER DB 18-006
/S/ PATRICK THOMPSON, P.E. DIRECTOR DESIGN SUPPORT SERVICES BUREAU	**TA 201-01**

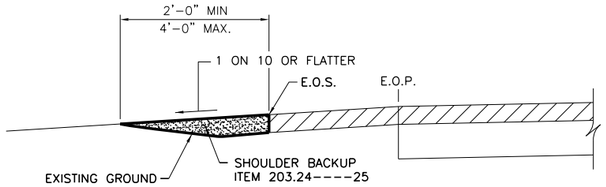

LEFT SHOULDER BACKUP WHEN MEDIAN GUIDE RAIL IS LOCATED > 11' FROM EOP

N.T.S.

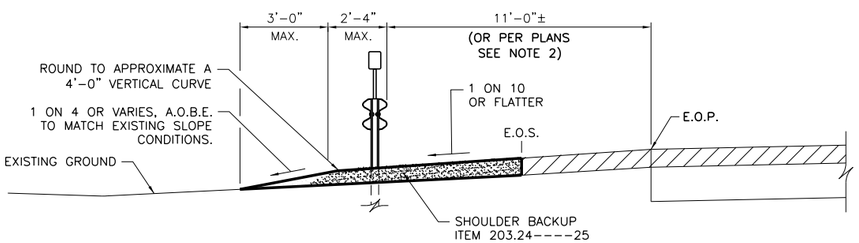

LEFT SHOULDER BACKUP AT EXISTING AND PROPOSED GUIDE RAIL LOCATIONS LOCATED AT 11' FROM EOP

N.T.S.

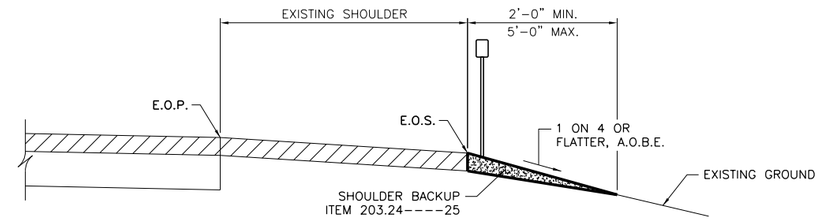

RIGHT SHOULDER BACKUP WITHOUT GUIDE RAIL AT SLOPES FLATTER THAN 1V:4H

N.T.S.

NOTE:
RIGHT SHOULDER SHOWN, LEFT SHOULDER TREATMENT SIMILAR.

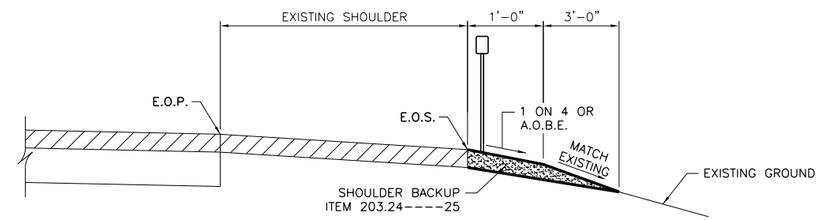

RIGHT SHOULDER BACKUP WITHOUT GUIDE RAIL AT SLOPES 1V:4H OR STEEPER

N.T.S.

NOTE:
RIGHT SHOULDER SHOWN, LEFT SHOULDER TREATMENT SIMILAR.

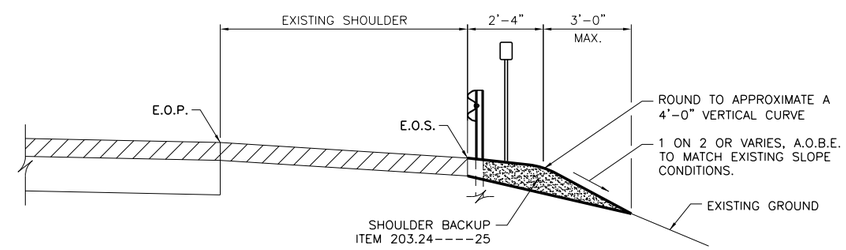

RIGHT SHOULDER BACKUP AT EXISTING AND PROPOSED GUIDE RAIL LOCATIONS

N.T.S.

GENERAL NOTES:

1. SHOULDER BACKUP MATERIAL, ITEM 203.24000025, SHALL BE PLACED TO A RELATIVE CONSISTENT WIDTH AND SURFACE A.O.B.E..
2. WHERE SPECIFIED BY PLANS OR A.O.B.E, SHOULDER BACKUP MATERIAL SHALL BE PLACED AND COMPACTED UNDER AND BEHIND ALL EXISTING AND NEW GUIDE RAIL. MATERIAL SHALL BE HAND WORKED AROUND GUIDE RAIL POSTS.
3. GRADING AT GUIDE RAIL TERMINALS SHALL BE INSTALLED PER NYSDOT SECTION 606 STANDARD SHEETS.
4. DELINEATORS, MILE MARKERS AND TENTH MILE MARKERS SHOULD BE REMOVED AND DISPOSED WHERE BACKUP MATERIAL IS INSTALLED BETWEEN RUNS OF GUIDE RAIL, OR WHERE SPECIFIED ON THE PLANS. ANY ADDITIONAL QUANTITY OF DELINEATORS, MILE MARKERS, TENTH MILE MARKERS AND POSTS REMOVED OUTSIDE OF THE ESTIMATED QUANTIY SHALL BE PAID FOR AT THE CONTRACTOR'S OWN EXPENSE. WHERE REMOVED OR DAMAGED, NEW DELINEATORS, MILE MARKERS, AND TENTH MILE MARKERS SHALL BE INSTALLED AFTER FINAL GRADING IS COMPLETE.
5. SHOULDER BACKUP MATERIAL SHALL ALSO BE HAND WORKED AROUND EXISTING MARKER POSTS.
6. BACKUP DETAILS APPLY TO MISCELLANEOUS LOCATIONS SUCH U-TURNS AND DECELERATION LANES (RAIL OFFSETS MAY DIFFER PER PLAN).

NEW YORK STATE OF OPPORTUNITY. | Thruway Authority

U.S. CUSTOMARY STANDARD SHEET

SHOULDER BACKUP
1R TYPE PROJECTS
(DRAWING SB)

APPROVED MAY 1, 2018	ISSUED UNDER DB 18-001
/S/ PATRICK THOMPSON, P.E. DIRECTOR DESIGN SUPPORT SERVICES BUREAU	**TA 203-01**

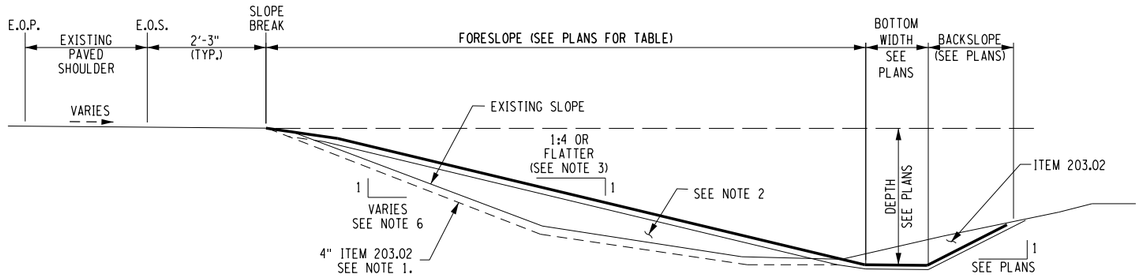

DITCH SECTION - SLOPE FLATENING

N.T.S.

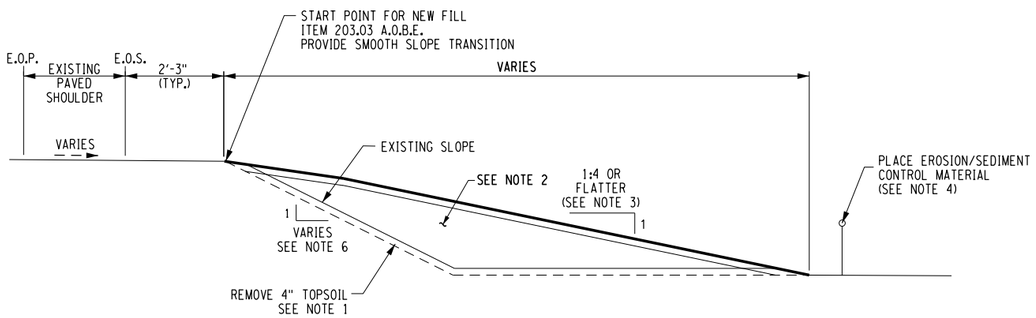

FILL SLOPE - FLATTENING SECTION

N.T.S.

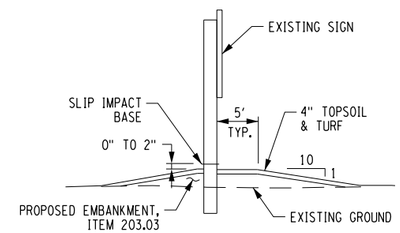

SIDE VIEW

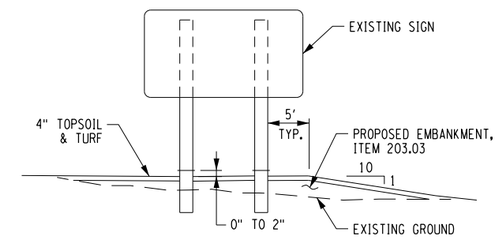

FRONT VIEW

GRADING AROUND SIGN BASE

N.T.S.

FLATTENING NOTES:

1. REMOVE 4" TOPSOIL A.O.B.E. - ITEM 203.02
2. BACKFILL NEW SLOPE WITH ITEM 203.03. PLACE 4" OF TOP SOIL AND ESTABLISH TURF.
3. GRADE TO ACHIEVE A MINIMUM 1 ON 4 SLOPE. SLOPE MAY BE FLATTENED FURTHER IN NON-ENVIRONMENTALLY SENSITIVE AREAS, A.O.B.E. SLOPES OF 1:6 OR FLATTER PREFERRED.
4. SEE CONTRACT PLANS FOR EROSION/SEDIMENT CONTROL DESIGN OR INSTALL A.O.B.E..
5. SEE PLANS FOR LOCATIONS AND REQUIREMENTS FOR FIBER OPTIC LINES AND UTILITIES.
6. ALL EXISTING SLOPES STEEPER THAN OR EQUAL TO 1:3 SHALL BE BENCHED IN ACCORDANCE WITH STANDARD SHEET 203-02 PRIOR TO PLACING FILL.
7. TEST PITS, ITEM 206.05, AT SITES AOBE.

NEW YORK STATE OF OPPORTUNITY. | Thruway Authority

U.S. CUSTOMARY STANDARD SHEET

SLOPE FLATTENING DETAILS

APPROVED JULY 1, 2017	ISSUED UNDER DB 17-001
/S/ PATRICK THOMPSON, P.E. DIRECTOR DESIGN SUPPORT SERVICES BUREAU	**TA 203-02**

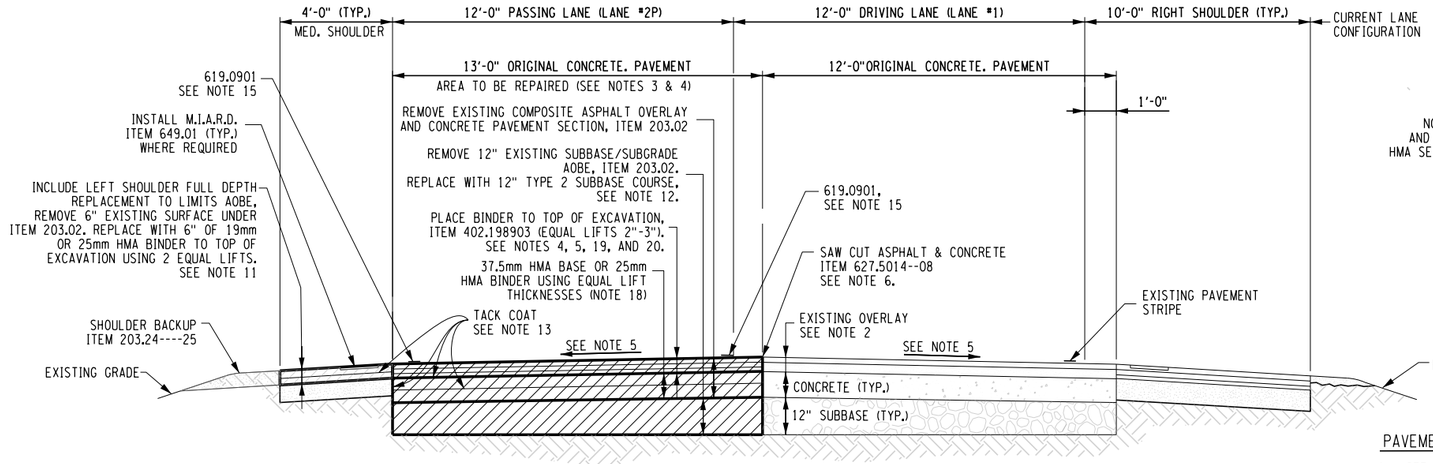

TYPICAL FULL DEPTH PAVEMENT REPAIR

READ IN DIRECTION OF TRAVEL. TWO LANE SECTION SHOWN FOR ILLUSTRATION PURPOSES. WHERE APPLICABLE, LANE #2C (CENTER LANE), LANE #3 (PASSING LANE) AND LANE #4 (RAMP) ARE TYPICAL IN DIMENSION TO LANE #2P. (NOT TO SCALE)

LEGEND

MATERIAL TO BE REMOVED AND REPLACED

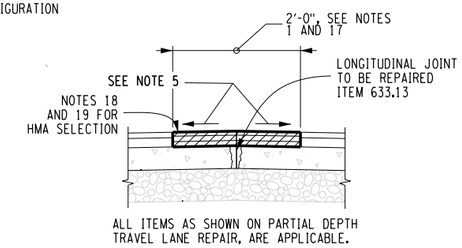

LONGITUDINAL JOINT REPAIR

N.T.S.

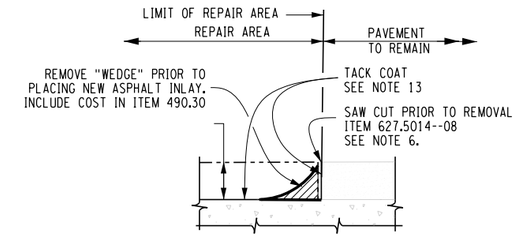

PAVEMENT REPAIR ASPHALT PAVEMENT REBATE

N.T.S.

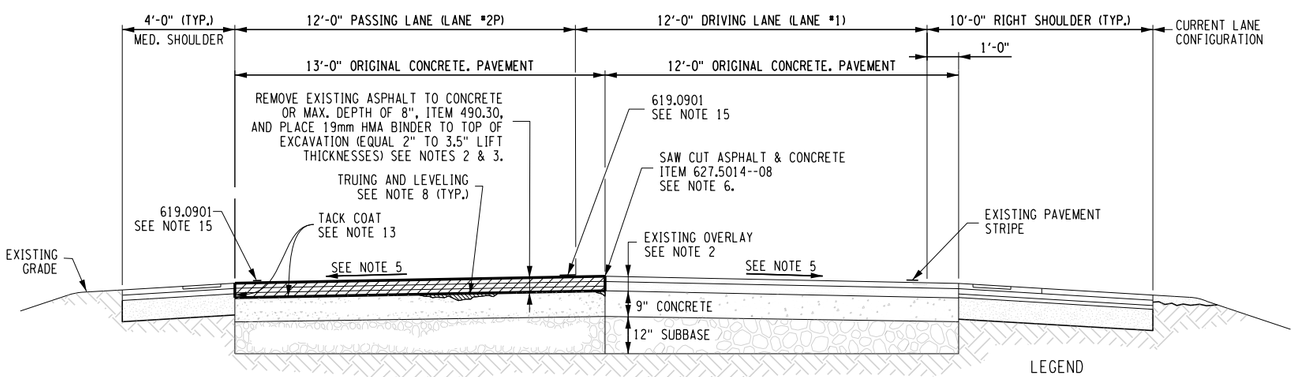

LEGEND

MATERIAL TO BE REMOVED AND REPLACED

TYPICAL PARTIAL DEPTH PAVEMENT REPAIR

READ IN DIRECTION OF TRAVEL. TWO LANE SECTION SHOWN FOR ILLUSTRATION PURPOSES. WHERE APPLICABLE, LANE #2C (CENTER LANE), LANE #3 (PASSING LANE) AND LANE #4 (RAMP) ARE TYPICAL IN DIMENSION TO LANE #2P. (NOT TO SCALE)

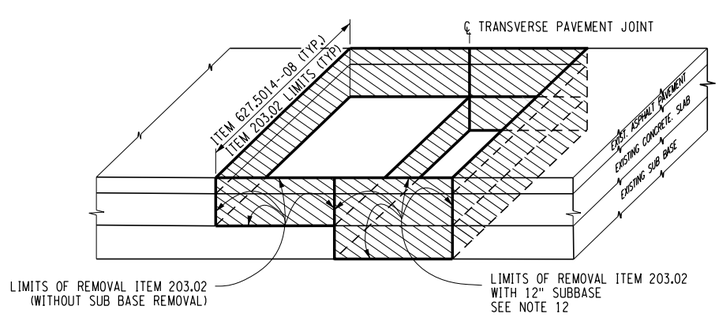

FULL DEPTH AND JOINT REPAIR DETAIL (TYP.)

N.T.S.

PAVEMENT REPAIR NOTES

1. SEE PAVEMENT REPAIR TABLES IN PLANS OR PROPOSAL FOR REPAIR LOCATIONS, TYPE (FULL OR PARTIAL) AND LENGTHS, AND WORK ITEMS. ALL IDENTIFIED LOCATIONS ARE APPROXIMATE LOCATIONS. ACTUAL WORK LOCATION WILL BE A.O.B.E.
2. EXISTING ASPHALT OVERLAY THICKNESS VARIES, SEE CORE DATA (IF AVAILABLE) FOR BASIS OF ESTIMATE.
3. PASSING LANE (2 LANE SECTION) FULL DEPTH PAVEMENT REPAIR SHOWN IN DIRECTION OF TRAVEL. ALL EB AND WB FULL DEPTH REPAIRS SIMILAR.
4. PAVEMENT SHOWN IS THE FINAL CONDITION. BINDER SHALL BE PLACED TO FINAL ELEVATIONS, FLUSH WITH TOP OF ADJOINING PAVEMENT.
5. CROSS SLOPES MAY VARY FROM NORMAL CROWN TO FULL SUPER ELEVATION (BANKED LEFT AND RIGHT). THE PROPOSED TRAVEL LANE CROSS SLOPE SHALL MATCH THE EXISTING CROSS SLOPE IN ALL CASES. WHEN PERFORMING A LONGITUDINAL JOINT REPAIR, MATCH THE EXISTING CROWN CROSS SLOPE.
6. EACH END OF THE REPAIR AREA SHALL BE SAW CUT UNDER ITEM 627.5014--08. USE A PERIMETER SAW CUT AT FULL DEPTH REPAIR AND WHERE APPROPRIATE A.O.B.E.
7. PARTIAL DEPTH REPAIR LOCATIONS SHALL BE MILLED TO CONCRETE, OR A MAXIMUM DEPTH OF 8", AND THE SURFACE SCARIFIED. THE ASPHALT WEDGE LEFT BY MILLING SHALL BE REMOVED PRIOR TO PLACING NEW ASPHALT COST OF SCARIFYING SURFACE AND REMOVING WEDGE SHALL BE INCLUDED IN ITEM 490.30.
8. ITEM 402.017903 HMA TRUE AND LEVELING SHALL BE USED TO FILL DEPRESSIONS OR VOIDS IN THE EXISTING CONCRETE, AS NECESSARY, A.O.B.E
9. AFTER OVERLAY IS REMOVED, DETERIORATED TRANSVERSE AND LONGITUDINAL JOINTS SHALL BE CLEANED OF ANY LOOSE DEBRIS AND FILLED UNDER ITEM 633.13. CLEANING, SEALING AND/OR FILLING JOINTS PRIOR TO PLACING OVERLAY A.O.B.E.
10. SOME PARTIAL DEPTH REPAIR WORK MAY EXPOSE PREVIOUSLY UNIDENTIFIED DETERIORATED CONCRETE JOINTS THAT REQUIRE FULL DEPTH REPAIR, AS DETERMINED BY THE ENGINEER. WHEN INSTRUCTED BY THE ENGINEER, THE CONTRACTOR SHALL COMPLETE THIS FULL DEPTH REPAIR IN CONJUNCTION WITH THE PARTIAL DEPTH REPAIR. THE FULL DEPTH JOINT REPAIR SHALL BE A MINIMUM OF 8FT IN LENGTH (4FT MIN. EACH SIDE OF JOINT)
11. AT LOCATIONS WHERE FULL DEPTH REPAIR IS REQUIRED IN THE PASSING OR LEFT RAMP LANE, THE LEFT SHOULDER SHALL BE REHABILITATED PER THE DETAIL ON TYPICAL FULL DEPTH SECTION. SHOULDER BACKUP, ITEM 203.24----25 SHALL BE INSTALLED TO MATCH ADJACENT AREA A.O.B.E., INSTALL M.I.A.R.D AS REQUIRED, ITEM 649.01. TYPE 19 BINDER HMA COURSE SHALL BE USED FOR THE SURFACE COURSE LIFT WHERE A NEW WEARING SURFACE WILL NOT BE INSTALLED DURING THE SAME CONSTRUCTION SEASON.
12. FULL DEPTH REPAIR AREAS SHALL HAVE EXISTING SUBBASE/SUBGRADE MATERIALS REMOVED AND REPLACED WITH SUBBASE WHERE ORDERED BY THE ENGINEER. LIMITS OF WORK SHALL BE A.O.B.E. EXCAVATION SHALL BE PAID FOR UNDER ITEM 203.02. SUBBASE SHALL BE PAID FOR UNDER ITEM 304.12.
13. PLACE TACK COAT ON ALL EXPOSED SURFACES WHICH WILL BE IN CONTACT WITH NEW ASPHALT. CONTRACTOR HAS THE OPTION OF USING STRAIGHT OR DILUTED TACK COAT. FOR APPLICATION RATES SEE TABLE 407-1 OF THE STANDARD SPECIFICATIONS.
14. THE CONTRACTOR SHALL ALIGN THE PROPOSED LONGITUDINAL JOINTS WITH EXISTING LONGITUDINAL JOINTS.
15. WHERE REQUIRED, TRAVEL LANE WILL NOT BE OPENED TO TRAFFIC UNTIL TEMPORARY PAVEMENT MARKING STRIPES HAVE BEEN INSTALLED IN ACCORDANCE WITH NYSTA STANDARD SHEET TA 685-04. WORK SHALL BE PAID FOR UNDER ITEM 619.0901.
16. UNLESS APPROVED BY THE ENGINEER, THE CONTRACTORS WORK SHALL NOT DISTURB EXISTING TRAFFIC LOOP DETECTION OR SENSING AREAS. IF TRAFFIC SENSOR EQUIPMENT IS ENCOUNTERED DURING PAVEMENT REPAIR OPERATIONS, THE CONTRACTOR SHALL TERMINATE PAVEMENT REPAIR WORK IMMEDIATELY PRIOR TO CONFLICTING WITH SENSORS/LOOPS AND BEGIN PAVEMENT WORK AGAIN IMMEDIATELY AFTERWARDS.
17. THE INTENT FOR THE LONGITUDINAL JOINT REPAIR IS TO ADDRESS DETERIORATED OR OPEN LONGITUDINAL JOINTS INTO THE EXISTING UNDERLYING CONCRETE SLABS. THE CONTRACTOR MAY NEED TO PERFORM THIS WORK IN STAGES TO ADDRESS WIDE REPAIRS. IF STAGING IS REQUIRED, IT WILL BE NECESSARY TO OFFSET THE FIRST STAGE TO ADDRESS THE UNDERLYING JOINT WITHIN A SINGLE LANE CLOSURE. OFFSET DISTANCE WILL BE DETERMINED IN THE FIELD, A.O.B.E.
18. UNLESS IDENTIFIED OTHERWISE IN THE PLANS, THE CONTRACTOR MAY OPTIONALLY INSTALL EITHER TYPE 19 OR 25 HMA BINDER COURSE FOR REPAIRS GREATER THAN 2" IN DEPTH. HOWEVER, TYPE 19 HMA BINDER SHALL BE USED AT LOCATIONS WHERE A NEW WEARING SURFACE WILL NOT BE INSTALLED DURING THE SAME CONSTRUCTION SEASON. LIFT THICKNESSES FOR BINDER SHALL BE EQUAL AND PLACED 2" MINIMUM TO 3.5" MAX. FOR TYPE 19 BINDER COURSE AND 2.5" MIN. TO 4.5" MAX FOR TYPE 25 BINDER COURSE.
19. THE WEARING SURFACE FOR REPAIRS GREATER THAN 40 FEET IN LENGTH WHICH WILL REMAIN IN PLACE BEYOND A CONSTRUCTION SEASON SHALL BE INSTALLED WITH TYPE 2 FRICTION MATERIALS, EXCEPT FOR THE COUNTIES OF ORANGE, ROCKLAND, AND WESTCHESTER WHICH SHALL HAVE TYPE 1 FRICTION WEARING SURFACES.
20. TYPE 9.5 OR TYPE 12.5 HMA TOP COURSE PAVEMENT SHALL BE USED FOR REPAIRS 2" OR LESS IN DEPTH.

NEW YORK STATE OF OPPORTUNITY. Thruway Authority

U.S. CUSTOMARY STANDARD SHEET

HIGHWAY PAVEMENT REPAIR DETAILS (DRAWING PRD)

APPROVED MAY 1, 2018

/S/ PATRICK THOMPSON, P.E.
DIRECTOR DESIGN SUPPORT SERVICES BUREAU

ISSUED UNDER DB 18-001

TA 402-01

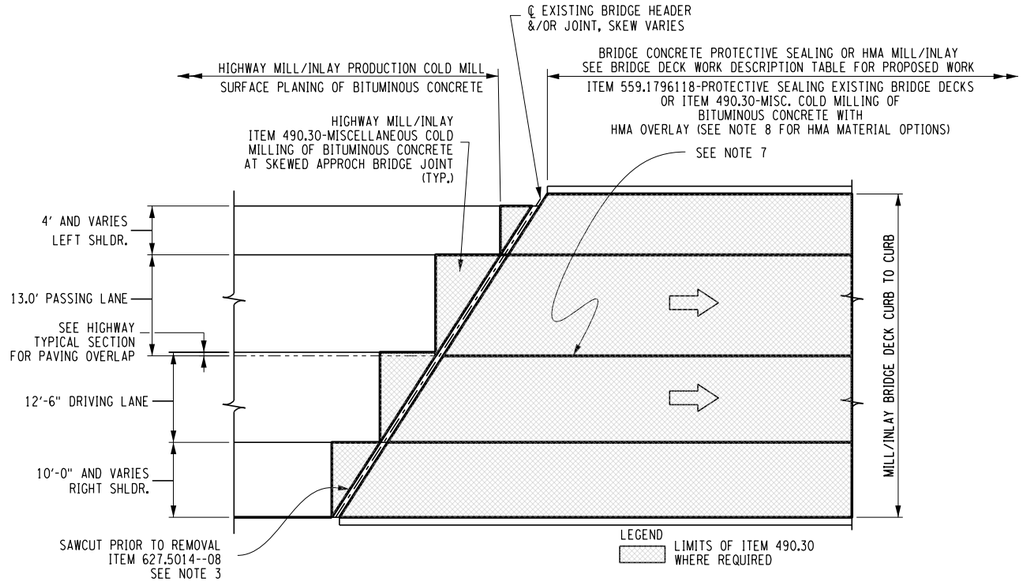

TYPICAL BRIDGE JOINT AND DECK MILLING OPERATION PLAN

N.T.S.

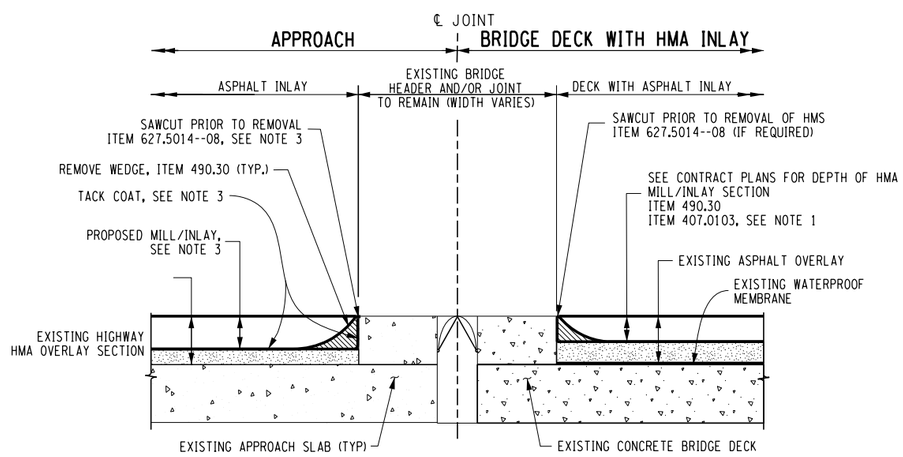

SECTION VIEW OF ASPHALT PAVEMENT REBATE AT BRIDGE JOINTS

N.T.S.

NOTES:

1. APPLY STRAIGHT TACK COAT (ITEM 407.0103) TO ALL MILLED BRIDGE DECK SURFACES.
2. SAW CUT, MILL, TACK COAT, AND INLAY BOTH SIDES OF BRIDGE JOINTS WHERE WORK IS REQUIRED ON DECK.
3. PERFORM WORK TO MATCH HIGHWAY MILL/INLAY SECTION.
4. SEE BRIDGE DECK WORK DESCRIPTION TABLE IN PLANS OR PROPOSAL FOR EXISTING SKEW ANGLE AND DECK AREA.
5. CROSS SLOPE VARIES FROM NORMAL CROWN TO FULL SUPERELEVATION (BOTH BANKED LEFT AND RIGHT). THE PROPOSED CROSS SLOPE SHALL MATCH THE EXISTING CROSS SLOPE.
6. THE DETAIL ON THIS DRAWING IS INTENDED TO IDENTIFY EXISTING BRIDGE JOINTS AND CONCRETE HEADERS AND TO IDENTIFY ADDITIONAL REQUIREMENTS ASSOCIATED WITH ITEMS 490.30, AND 627.5014__08. THE DETAIL IS NOT INTENDED TO IDENTIFY THE EXACT DEPTH OF THE EXISTING ASPHALT OVERLAY ON THE ABOVE NOTED STRUCTURES.
7. A MILLING AND PAVING OVERLAP IS NOT REQUIRED ON BRIDGE DECK(S).
8. 1" OF 6.3 POLYMER MODIFIED HMA, 80 SERIES COMPACTION SHALL BE INSTALLED UNLESS SPECIFIED OTHERWISE IN THE CONTRACT PLANS. TYPE 2 FRICTION AGGREGATES SHALL BE USED, EXCEPT FOR THE COUNTIES OF ORANGE, ROCKLAND, AND WESTCHESTER WHICH SHALL USE TYPE 1 FRICTION AGGREGATES.

NEW YORK STATE OF OPPORTUNITY. | Thruway Authority

U.S. CUSTOMARY STANDARD SHEET

BRIDGE DECK HMA WEARING SURFACE
RESURFACING
(DRAWING BDR)

APPROVED SEPTEMBER 21, 2016

/S/ PATRICK THOMPSON, P.E.
DIRECTOR DESIGN SUPPORT
SERVICES BUREAU

ISSUED UNDER EI 16-001

TA 402-02

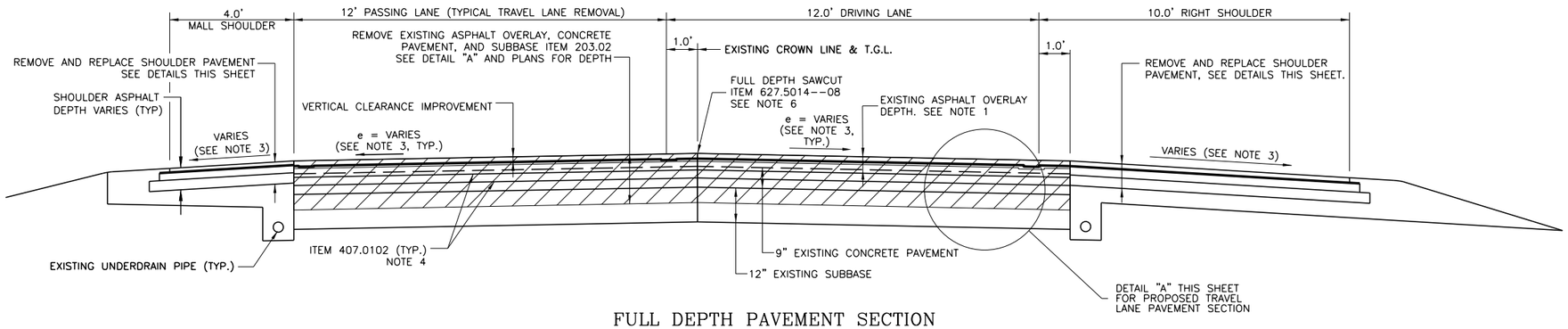

FULL DEPTH PAVEMENT SECTION
FOR BRIDGE UNDERCLEARANCE IMPROVEMENT

(NOT TO SCALE)

READ IN DIRECTION OF TRAVEL

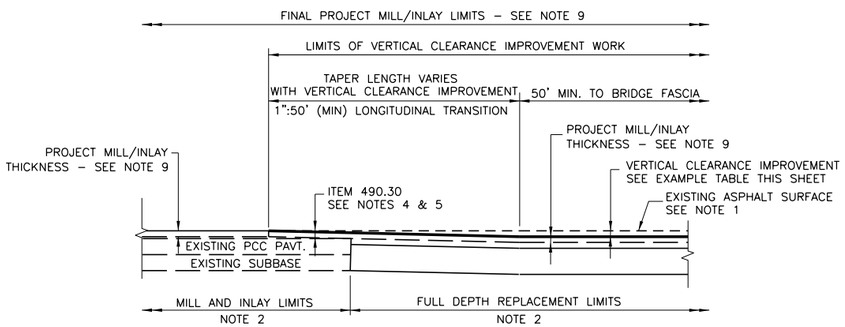

LONGITUDINAL TRANSITIONS

NOT TO SCALE

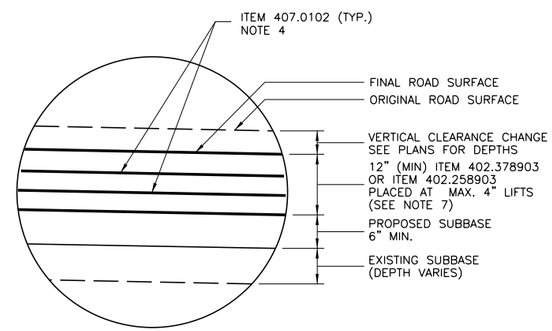

DETAIL "A"
FINAL UNDERCLEARANCE PAVEMENT SECTION DETAIL

NOT TO SCALE

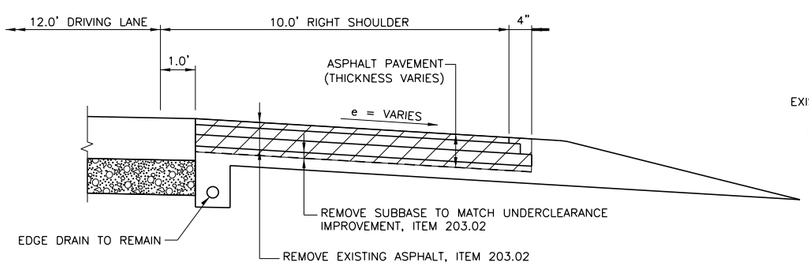

NOTE: RIGHT SHOULDER SHOWN, LEFT SHOULDER SIMILAR.

SHOULDER REMOVAL

NOT TO SCALE

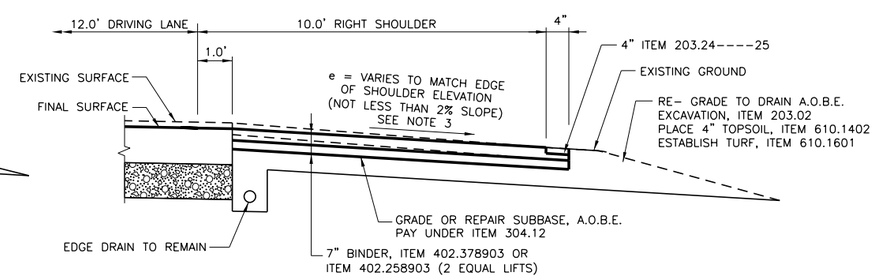

NOTE: RIGHT SHOULDER SHOWN, LEFT IS SIMILAR.

SHOULDER REPLACEMENT

NOT TO SCALE

SUGGESTED PAVING SEQUENCE:

1. FIELD VERIFY ASPHALT DEPTHS TO DETERMINE REQUIRED LONGITUDINAL FULL DEPTH REPLACEMENT LIMITS.
2. PERFORM FULL DEPTH PAVEMENT REPLACEMENT AND MATCH TO EXISTING USING TAPERED MILLED TRANSITIONS.
4. INSTALL PAVEMENT WEDGES, AS NEEDED, TO OBTAIN CONFORMANCE WITH SECTION 619 UNEVEN PAVEMENT DROP-OFF REQUIREMENTS. ALTERNATIVELY, IF PERMITTED BY THE CONTRACT PLANS/PROPOSAL OR WITH APPROVAL BY THE DIVISION TRAFFIC ENGINEER, MILL EXISTING PAVEMENT TO FINAL ELEVATION PRIOR TO INITIATING WORK.
5. INSTALL EDGE AND SKIP LINES PRIOR TO OPENING WORK ZONE TO TRAFFIC.
6. THIS WORK SHALL BE DONE PRIOR TO THE PRODUCTION MAINLINE MILL AND INLAY OPERATION. THE SUBSEQUENT MILL AND INLAY SHALL RESURFACE PAVEMENT INSTALLED UNDER THIS OPERATION.

NOTES:

1. EXISTING ASPHALT OVERLAY THICKNESS VARIES. THE CONTRACTOR SHALL FIELD VERIFY ASPHALT DEPTHS PRIOR TO WORK. COST SHALL BE INCLUDED WITHIN BASIC TRAFFIC CONTROL ITEM 619.01.
2. PAVEMENT FULL DEPTH WORK LIMITS SHALL MINIMALLY BE INITIATED WHERE EXISTING HMA THICKNESS IS LESS THAN THE PROJECT FINAL INSTALLED MILL/INLAY DEPTH, INCLUDING BINDER AND TOP COURSES. FULL DEPTH REPLACEMENT LIMITS MAY BE EXTENDED TO CORRECT PAVEMENT DEFICIENCIES A.O.B.E.

   IF APPROVED BY THE ENGINEER, CLEARANCE MAY BE ADDRESSED BY MILL/INLAY ONLY FOR LOCATIONS DETERMINED TO HAVE PAVEMENT IN GOOD CONDITION AND WITH EXISTING HMA OVERLAY THICKNESS GREATER THAN THE FINAL INSTALLED PROJECT MILL/INLAY DEPTH.
3. CROSS SLOPE VARIES – NORMAL CROWN (2%) TO FULL SUPERELEVATION (BOTH BANKED LEFT AND RIGHT). THE PROPOSED TRAVEL LANE CROSS SLOPE SHALL MATCH THE EXISTING CROSS SLOPE RATE. SHOULDER CROSS SLOPE MAY BE REDUCED A.O.B.E. TO 2% MIN. TO MATCH THE EXISTING EDGE OF SHOULDER OR TO FACILITATE DRAINAGE.
4. REFER TO TABLE 407-1, OF THE STANDARD SPECIFICATIONS FOR TACK COAT APPLICATION RATES. THE CONTRACTOR MAY SUBSTITUTE STRAIGHT TACK COAT WITH NO CHANGE IN PAYMENT COST.
5. ALL DEBRIS ON MILLED SURFACES SHALL BE REMOVED IN ACCORDANCE WITH SECTION 490-COLD MILLING OF THE N.Y.S.D.O.T. STANDARD SPECIFICATIONS.
6. TRANSVERSE AND LONGITUDINAL SAWCUTTING, ITEM 627.5014--08, SHALL BE REQUIRED AROUND ALL FULL DEPTH REPLACEMENT AREAS.
7. MINIMUM HMA THICKNESS SHALL BE 12". INCREASE HMA PAVEMENT SECTION TO BOTTOM OF EXISTING CONCRETE PAVEMENT WHERE DEPTH IS GREATER.
8. IN TAPER AREAS, TRAFFIC MAY BE RETURNED TO MILLED HMA SURFACES ONLY FOR PERIODS UP TO 14 CALENDAR DAYS PRIOR TO INSTALLATION OF THE MAINLINE RESURFACING COURSE(S). THE MILLING MACHINE SHALL BE OPERATED IN THESE AREAS AT A REDUCED SPEED TO PROVIDE A MORE RIDEABLE SURFACE. TRAFFIC OPERATIONS WILL NOT BE PERMITTED ON MILLED ORIGINAL CONCRETE PAVEMENT.

   TAPER TRAVEL LANE LOCATIONS THAT WILL NOT BE RESURFACED BY THE MAINLINE PRODUCTION PAVEMENT OPERATION WITHIN 14 CALENDAR DAYS SHALL BE MILLED DURING TAPER INSTALLATION AN ADDITIONAL 2½" BELOW FINAL TAPER DEPTH AND RESURFACED WITH 2½" OF ITEM 402.257903. NO ADDITIONAL PAYMENT FOR THE ADDITIONAL MILLING OR INSTALLATION OF PAVEMENT MATERIALS SHALL BE MADE.
9. SEE TYPICAL SECTIONS FOR FINAL COMBINED MILL/INLAY PAVEMENT SECTION. INSTALL FINAL COMBINED BINDER AND TOP MILL/INLAY SECTION OVER REPAIR AREA DURING PLACEMENT OF ADJOINING PRODUCTION MAINLINE WORK. MATCH ADJUSTED UNDERCLEARANCE HEIGHT.
10. PAVEMENT MARKINGS SHALL BE INSTALLED IN ACCORDANCE WITH THRUWAY STANDARD SHEET TA 685-04. COSTS SHALL BE PAID FOR UNDER RESPECTIVE PAY ITEMS.
11. TA AMENDMENTS OF THE NYS SPECIFCATIONS ARE VOIDED FOR THIS WORK. THE CONTRACTOR WILL BE PERMITTED TO DELINEATE DROP-OFFS IN ACCORDANCE WITH NYS SPECIFICATION SECTION 619-3.02 K.

NEW YORK STATE OF OPPORTUNITY. | Thruway Authority

U.S. CUSTOMARY STANDARD SHEET

OVERHEAD BRIDGE UNDERCLEARANCE IMPROVEMENT (DRAWING BU)

APPROVED NOVEMBER 1, 2018	ISSUED UNDER DB 18-005
/S/ PATRICK THOMPSON, P.E. DIRECTOR DESIGN SUPPORT SERVICES BUREAU	**TA 402-03**

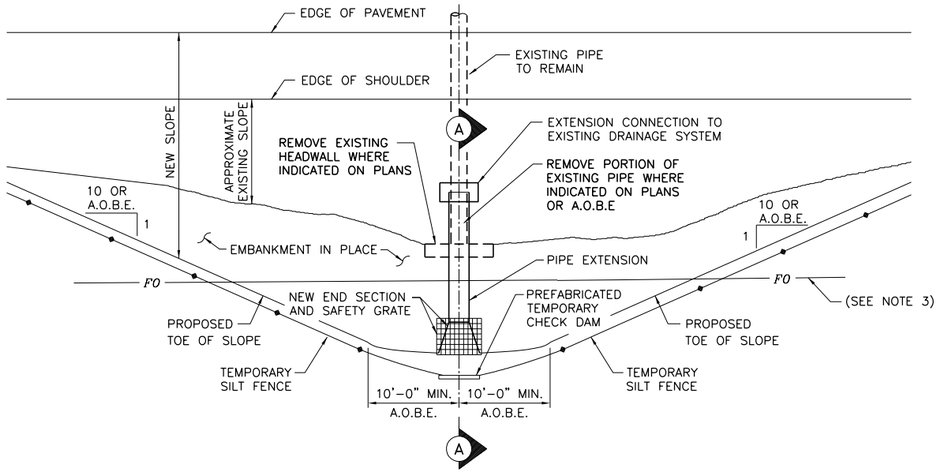

TYPICAL PLAN

N.T.S.

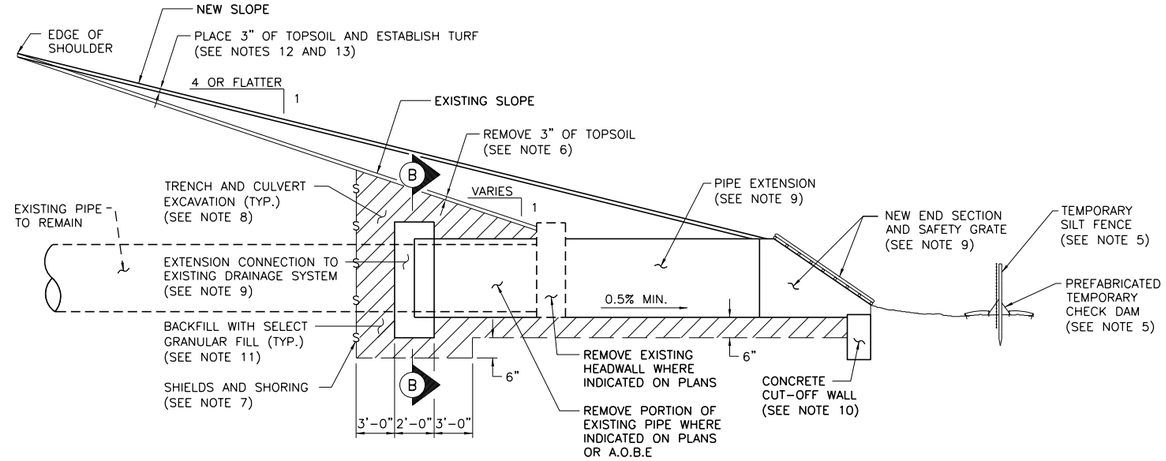

SECTION A–A
CULVERT EXTENSION WITH EXISTING HEADWALL REMOVAL

N.T.S

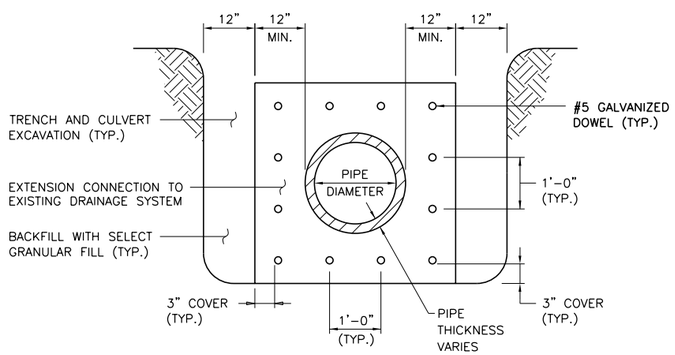

SECTION B–B

N.T.S.

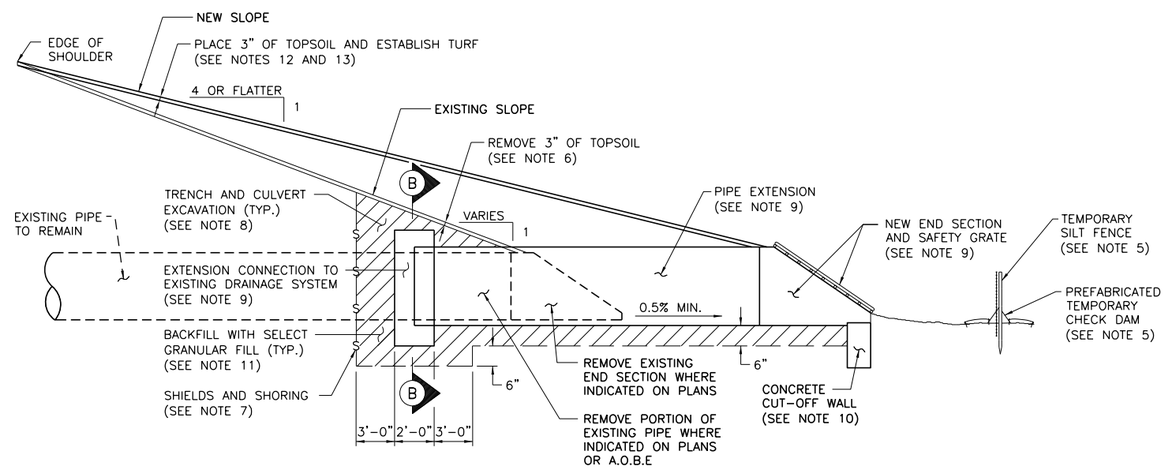

SECTION A–A
CULVERT EXTENSION WITH EXISTING END SECTION REMOVAL

N.T.S

GENERAL NOTES:

1. SEE DRAINAGE TABLE(S) IN THE CONTRACT DOCUMENTS FOR WORK LOCATIONS AND WORK TO BE DONE.
2. VERIFY ALL PROPOSED CULVERT EXTENSION LENGTHS AND PIPE DIAMETERS PRIOR TO INSTALLATION. EXTENSIONS SHALL HAVE ADEQUATE LENGTH TO ATTAIN A MINIMUM 1:4 SIDE SLOPE OR FLATTER.
3. THE THRUWAY AUTHORITY'S FIBER OPTIC SYSTEM IS LOCATED WITHIN THE WORK LIMITS OF THIS PROJECT. THE APPROXIMATE LOCATION IS SHOWN IN THE CONTRACT DOCUMENTS. PRIOR TO WORK, THE ONE–CALL NOTIFICATION SYSTEM SERVING THE AREA SHALL BE CONTACTED ACCORDING TO STANDARD SPECIFICATION SECTION 107–07.
4. PROTECT AND PRESERVE ALL EXISTING UNDERDRAIN LATERALS.
5. PROVIDE TEMPORARY SILT FENCE ACCORDING TO NYSDOT STANDARD SHEET 209–01 AND PREFABRICATED TEMPORARY CHECK DAM ACCORDING TO NYSDOT STANDARD SHEET 209–02 AT THE LOCATIONS SHOWN IN THE CONTRACT DOCUMENTS.
6. REMOVE 3 INCHES OF TOPSOIL FROM EXISTING SIDE SLOPE UNDER THE UNCLASSIFIED EXCAVATION AND DISPOSAL ITEM.
7. PROVIDE A SHIELDS AND SHORING SYSTEM AT THE LOCATIONS SHOWN IN THE CONTRACT DOCUMENTS OR AS DIRECTED BY THE ENGINEER.
8. EXCAVATE MATERIAL REQUIRED TO REMOVE EXISTING END SECTIONS, HEADWALLS AND OTHER CULVERT COMPONENTS AS SPECIFIED IN THE CONTRACT DOCUMENTS. EXCAVATE TO CREATE NEW SUBGRADE SURFACE BENEATH PROPOSED CULVERT EXTENSION.
9. INSTALL CULVERT EXTENSION, INCLUDING EXTENSION CONNECTION TO EXISTING DRAINAGE STRUCTURE, PIPE EXTENSION, END SECTION, SAFETY GRATE AND OTHER CULVERT COMPONENTS AS SPECIFIED IN THE CONTRACT DOCUMENTS.
10. PROVIDE A CONCRETE CUT–OFF WALL ACCORDING TO NYSDOT STANDARD SHEET 603–04 AT THE LOCATIONS SHOWN IN THE CONTRACT DOCUMENTS.
11. BACKFILL EXCAVATED AREAS WITH SELECT GRANULAR FILL.
12. ESTABLISH NEW 1:4 (OR FLATTER) SLOPE TO MATCH EXISTING GROUND UNDER THE EMBANKMENT IN PLACE ITEM. WHERE THE AMOUNT OF ON–SITE EXCAVATED SUITABLE MATERIAL IS NOT SUFFICIENT FOR TOPSOIL PLACEMENT, ADDITIONAL TOPSOIL SHALL BE PROVIDED ACCORDING TO STANDARD SPECIFICATION SECTION 610.
13. PREPARE GROUND ON NEW SLOPE AND ESTABLISH TURF ACCORDING TO THE CONTRACT DOCUMENTS AND AS DIRECTED BY THE ENGINEER.

NEW YORK STATE OF OPPORTUNITY. | Thruway Authority

U.S. CUSTOMARY STANDARD SHEET

CULVERT EXTENSION DETAILS

APPROVED JANUARY 1, 2018

/S/ PATRICK THOMPSON, P.E.
DIRECTOR DESIGN SUPPORT SERVICES BUREAU

ISSUED UNDER DB 17-006

TA 603-01

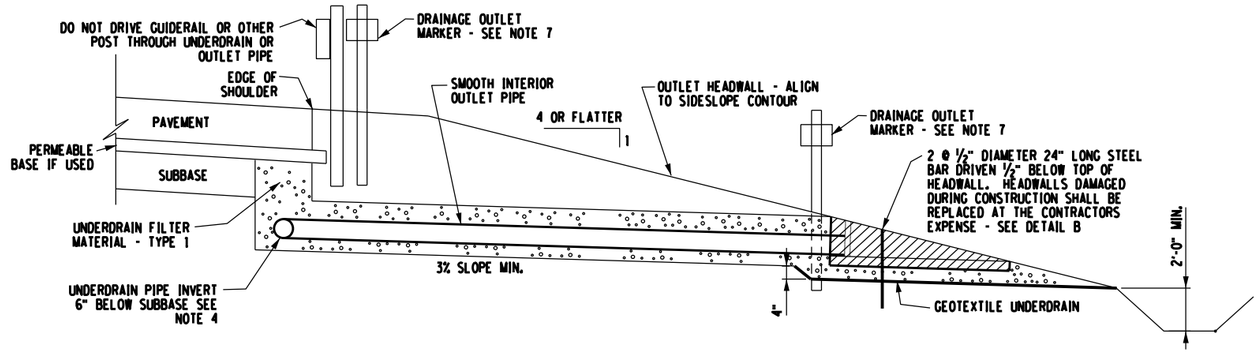

UNDERDRAIN / EDGEDRAIN OUTLET WITH PRECAST HEADWALL (TYP.@ 1 : 4 SLOPES OR FLATTER)

N.T.S.

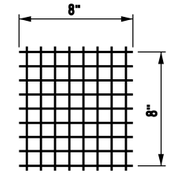

RODENT SCREEN

N.T.S.

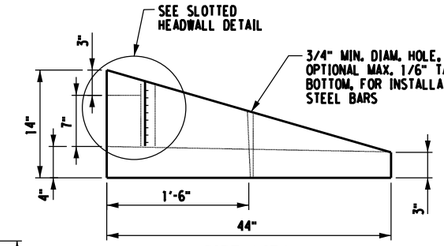

SIDE VIEW

N.T.S.

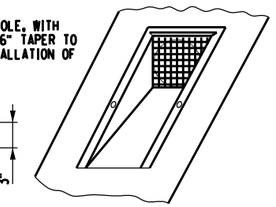

INSTALLED VIEW

N.T.S.

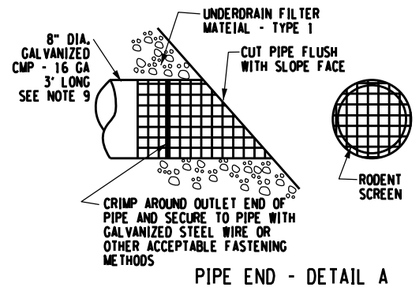

PIPE END - DETAIL A

N.T.S.

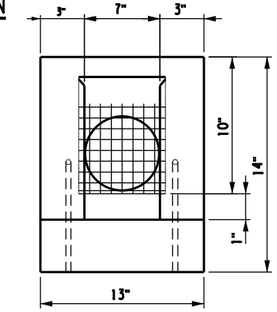

SLOTTED HEADWALL DETAIL FRONT VIEW

N.T.S.

NOTE:
INCLUDE THE COST OF LABOR, MATERIALS AND EQUIPMENT REQUIRED TO FABRICATE AND INSTALL THE HEADWALLS IN THE UNIT BID PRICE PER HEADWALL. HEADWALLS DAMAGED DURING CONSTRUCTION SHALL BE REPLACED AT CONTRACRTOR'S EXPENSE.

DETAIL B
PRECAST CONCRETE OUTLET HEADWALL
6 INCH LATERAL OUTLET PIPES
ITEM 605.21015025

N.T.S.

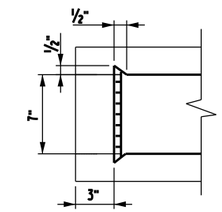

SLOTTED HEADWALL DETAIL TOP VIEW

N.T.S.

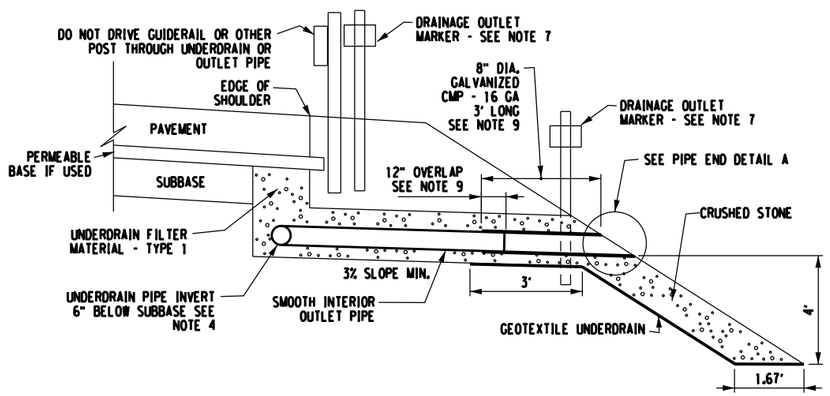

UNDERDRAIN / EDGEDRAIN OUTLET (TYP. @ SLOPES > 1 : 4

N.T.S.

NOTES:

1. LATERAL OUTLETS SHALL BE 6" MINIMUM INSIDE DIAMETER SMOOTH INTERIOR PIPE PLACED APPROXIMATELY EVERY 250' FOR PIPE EDGEDRAINS AND EVERY 125' FOR PREFABRICATED GEOCOMPOSITE EDGEDRAINS (PGED). WHILE ADJUSTMENTS MAY BE MADE FOR LOCAL CONFLICTS, THE SPACING SHOULD NOT EXCEED 300' FOR PIPE EDGEDRAINS AND 150' FOR PGED. WHERE THE ROADWAY PROFILE HAS LESS THAN A 1% GRADE, THE SPACING SHOULD BE REDUCED TO APPROXIMATELY 200' WITH A MAXIMUM OF 250' FOR PIPE EDGEDRAINS AND 100' TO 125' FOR PGED, UNLESS OTHERWISE SPECIFIED.
2. SLOPE OUTLET PIPES A MINIMUM 3%
3. THE PRECAST UNDERDRAIN OUTLET HEADWALL AS SHOWN IN DETAIL B SHOULD BE USED UNLESS:
   A. THE SIDESLOPE IS STEEPER THAN 1V ON 4H.
   B. THE OUTLET PIPE INVERT IS LESS THAN 2' ABOVE THE DITCH INVERT.
   C. THE ROADWAY INCORPORATES A CLOSED DRAINAGE SYSTEM. IN THIS CASE, THE OUTLET SHOULD DRAIN INTO THE CLOSED DRAINAGE CATCH BASINS.
   D. THE NOMINAL OUTLET PIPE DIAMETER IS LARGER THAN 6".
4. PREFERENCES IN SETTING EDGEDRAINS AND OUTLET ELEVATIONS:
   A. SET THE UNDER DRAIN PIPE INVERT ELEVATION 10" BELOW THE BOTTOM OF SUBBASE WHEN OUTLET AND DITCH ELEVATIONS PROVIDE A MINIMUM 3% OUTLET GRADE WHILE MAINTAINING THE OUTLET PIPE INVERT A MINIMUM 2' ABOVE THE DITCH INVERT.
   B. IF THIS IS NOT ACHIEVABLE, RAISE THE UNDERDRAIN PIPE INVERT A MAXIMUM 10" TO A LEVEL EQUAL TO THE BOTTOM OF SUBBASE AND ADD AN OUTLET AT THIS LOCATION TO ACCOMMODATE DRAINAGE.
   C. IF A OR B IS NOT POSSIBLE, CONNECT OUTLET TO CLOSED DRAINAGE SYSTEM, IF AVAILABLE.
5. USE 16 GAUGE OR HEAVIER #2 OR #3 WELDED WIRE MESH, MADE OF TYPE 304 STAINLESS STEEL OR CARBON STEEL WIRE HOT GALVANIZED IN ACCORDANCE WITH SECTION 703-07 OF THE STANDARD SPECIFICATION.
6. EDGEDRAIN LOCATION IS SHOWN AT OUTER EDGE OF SHOULDER. HOWEVER, CONTRACT DOCUMENTS MAY SPECIFY THE EDGEDRAIN AT A DIFFERENT LOCATION RELATIVE TO THE EDGE OF SHOULDERS.
7. DRAINAGE OUTLET MARKERS SHOULD BE USED TO LOCATE ALL DRAINAGE OUTLETS EXCEPT THOSE INTO DRAINAGE STRUCTURES.
8. FIELD LOCATE SAG. COST TO BE INCLUDED IN ITEM 625.01 - SURVEY OPERATIONS.
9. FILL SPACE BETWEEN 6" UNDERDRAIN AND 8" CMP WITH CAULK TO MAKE WATER TIGHT JOINT A.O.B.E. COST TO BE INCLUDED IN ITEM 605.1702 - OPTIONAL UNDERDRAIN PIPE - 6" DIA.

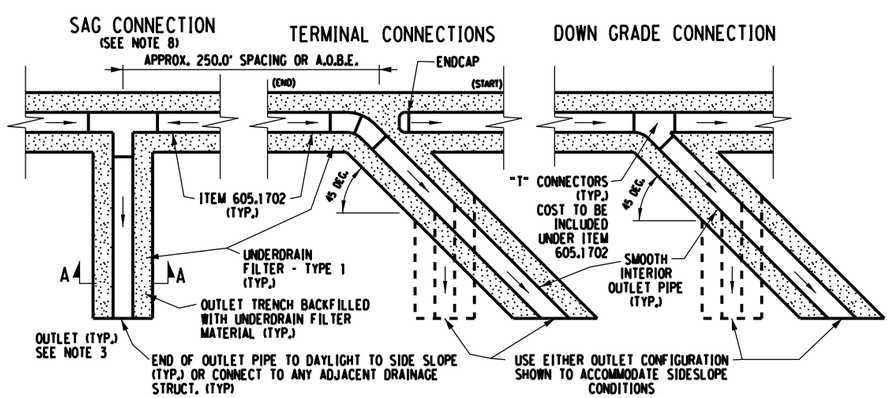

PLAN VIEW LATERAL OUTLET CONNECTIONS

N.T.S.

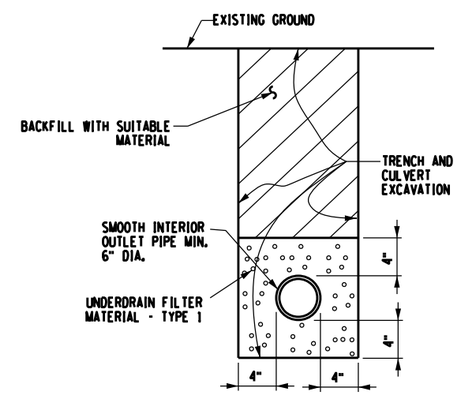

SECTION A-A
OUTLET DETAIL

N.T.S.

NEW YORK STATE OF OPPORTUNITY. Thruway Authority

U.S. CUSTOMARY STANDARD SHEET

UNDERDRAIN DETAILS

APPROVED MAY 1, 2020

/S/ PATRICK THOMPSON, P.E.
DIRECTOR DESIGN SUPPORT SERVICES BUREAU

ISSUED UNDER DB 20-001

TA 605-01

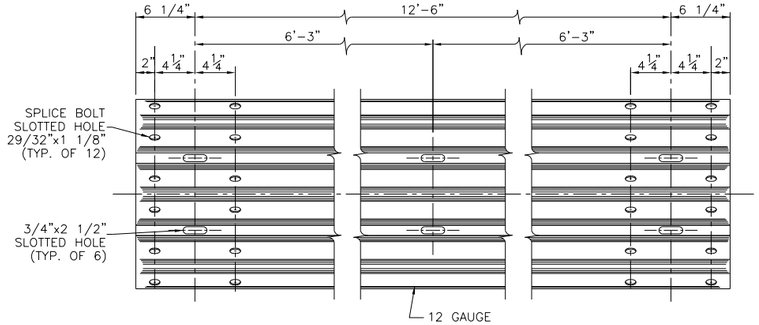

TYPICAL THRIE BEAM SECTION

SCALE: 1 1/2" = 1'-0"

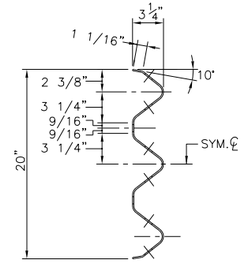

END VIEW OF TRANSITION

SCALE: 1 1/2" = 1'-0"

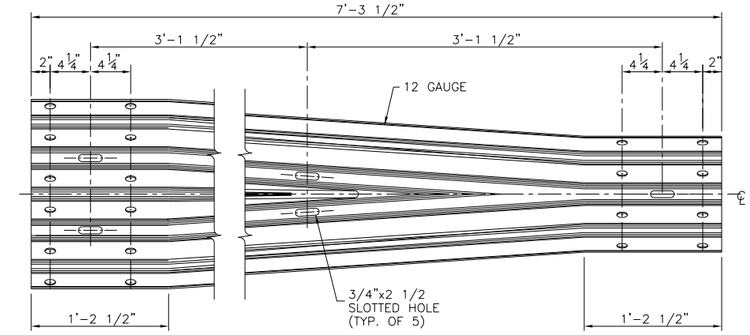

TRANSITION SECTION
THRIE BEAM TO CORRUGATED BEAM

SCALE: 1 1/2" = 1'-0"

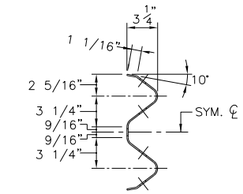

END VIEW OF TRANSITION

SCALE: 1 1/2" = 1'-0"

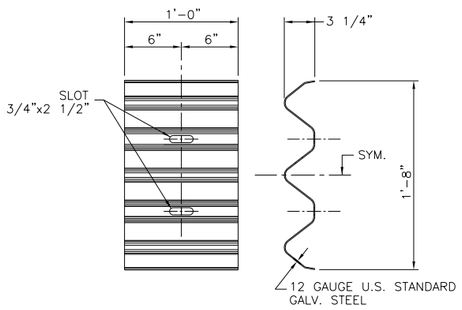

DETAIL OF BACK UP PLATE

(SEE NOTE 8)

SCALE: 1 1/2" = 1'-0"

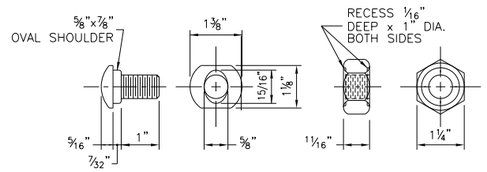

1 1/4" SPLICE BOLT/NUT

SCALE: 6" = 1'-0"

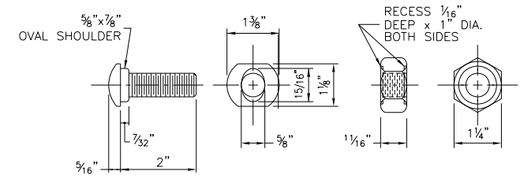

2" RAIL BLOCKOUT BOLT/NUT

SCALE: 6" = 1'-0"

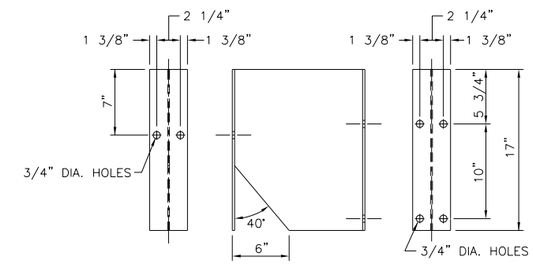

W14 x 22 BLOCKOUT DETAIL

SCALE: 1 1/2" = 1'-0"

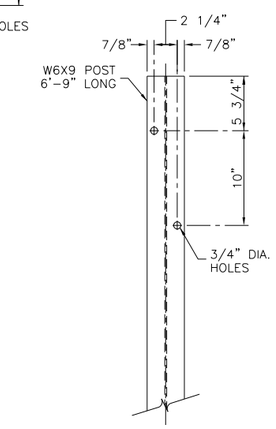

W6x9 POST DETAIL

SCALE: 1 1/2" = 1'-0"

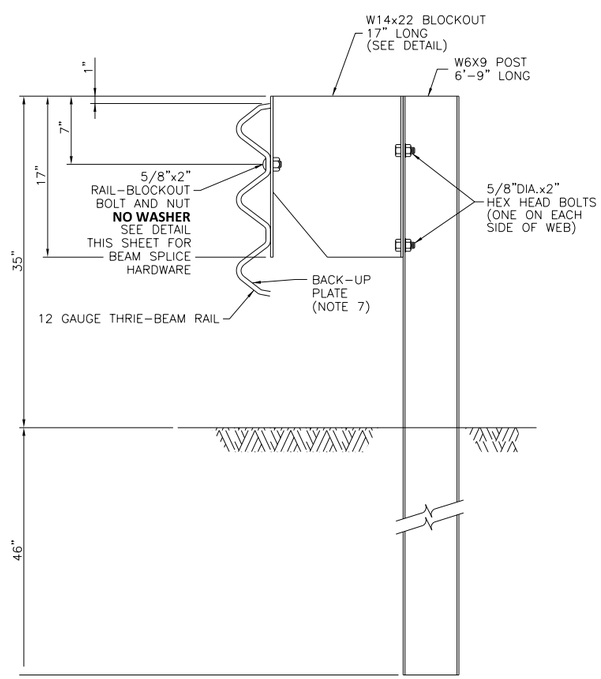

THRIE BEAM BLOCKOUT ASSEMBLY

SCALE: 1 1/2" = 1'-0"

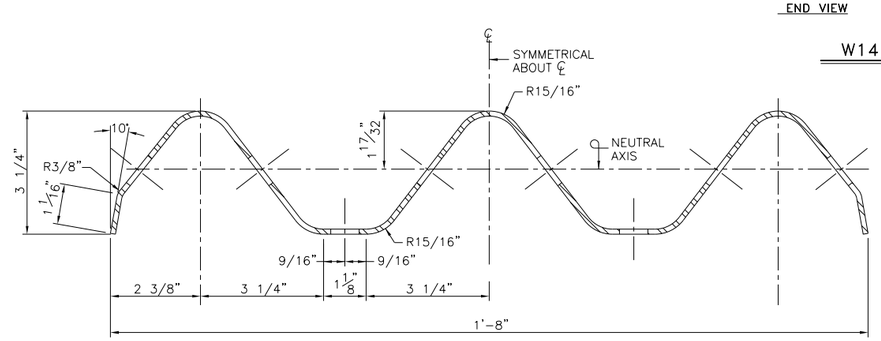

THRIE BEAM CROSS SECTION

SCALE: 6" = 1'-0"

NOTES:

1. ALL THRIE BEAM SECTIONS SHALL BE 12 GAUGE
2. THE TRANSITION SECTION FROM CORRUGATED BEAM TO THRIE BEAM SHALL BE 12 GUAGE.
3. THE MATERIAL FROM WHICH THE THRIE BEAM IS FABRICATED SHALL CONFORM TO MATERIAL SPECIFICATION 710-20.
4. ALL COMPONENTS OF THRIE BEAM SYSTEM SHALL BE GALVANIZED IN ACCORDANCE WITH MATERIAL SPECIFICATION 719-01 AFTER FABRICATION.
5. WHEN HIGHWAY POSTS OCCUR WHERE THERE ARE NO HOLES IN STANDARD THRIE BEAM SECTION, HOLES SHALL BE DRILLED IN THE APPROPRIATE LOCATIONS AND THE GALVANIZING SHALL BE REPAIRED ACCORDING TO MATERIAL SPECIFICATION 719-01.
6. ALL RAILS, POST, BLOCKS AND HARDWARE SHALL BE GALVANIZED IN ACCORDANCE WITH THE PROVISIONS OF MATERIAL SUBSECTION 710-20.
7. THRIE BEAM BACK-UP PLATES SHALL BE USED AT ALL POSTS WHERE THRIE BEAM SPLICE DOES NOT OCCUR.
8. NORMAL POST SPACING IS 6'-3".
9. THE W6x8.5 IS AN ACCEPTABLE ALTERNATIVE TO THE W6x9.
10. THIS GUIDE RAIL SYSTEM IS BASED ON THE U.S. CUSTOMARY UNITS VERSION OF AASHTO'S TL-4 MODIFIED THRIE BEAM (SGR09b-METRIC UNITS). THE BARRIER IS ILLUSTRATED IN APPENDIX B OF AASHTO'S ROADSIDE DESIGN GUIDE.
11. MAXIMUM DYNAMIC DEFLECTION IS APPROXIMATELY 3 FT. FOR A 20,000-POUND SCHOOL BUS (56 MPH, 15°IMPACT ANGLE). SEE ACCEPTANCE LETTER B64.

NEW YORK STATE OF OPPORTUNITY. | Thruway Authority

U.S. CUSTOMARY STANDARD SHEET

MODIFIED THRIE BEAM (MOD.) GUIDE RAILING
(DRAWING GR-1)

APPROVED JANUARY 1, 2019	ISSUED UNDER DB 18-006
/S/ PATRICK THOMPSON, P.E. DIRECTOR DESIGN SUPPORT SERVICES BUREAU	**TA 606-01**

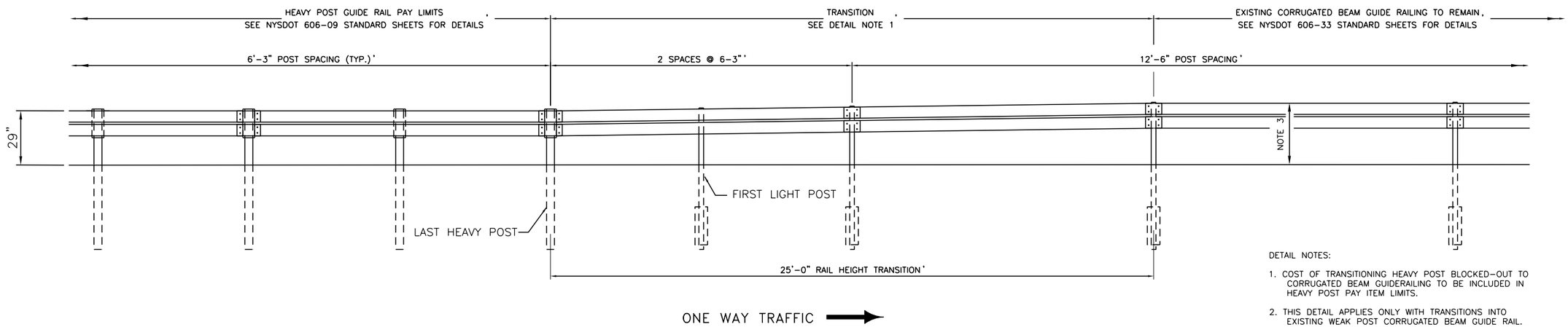

DETAIL NOTES:

1. COST OF TRANSITIONING HEAVY POST BLOCKED-OUT TO CORRUGATED BEAM GUIDERAILING TO BE INCLUDED IN HEAVY POST PAY ITEM LIMITS.
2. THIS DETAIL APPLIES ONLY WITH TRANSITIONS INTO EXISTING WEAK POST CORRUGATED BEAM GUIDE RAIL. SEE NYSDOT MAINTENANCE SUPPORT STANDARD SHEET 606-33 FOR EXISTING RAIL DETAILS.
3. EXISITNG RAIL HEIGHT ACCEPATABLE BETWEEN 29" AND 35", PER TABLE 10-7 OF HIGHWAY DESIGN MANUAL

TRANSITION HEAVY POST BLOCKED-OUT CORRUGATED BEAM GUIDE RAILING TO EXISTING CORRUGATED BEAM GUIDE RAILING

N.T.S.

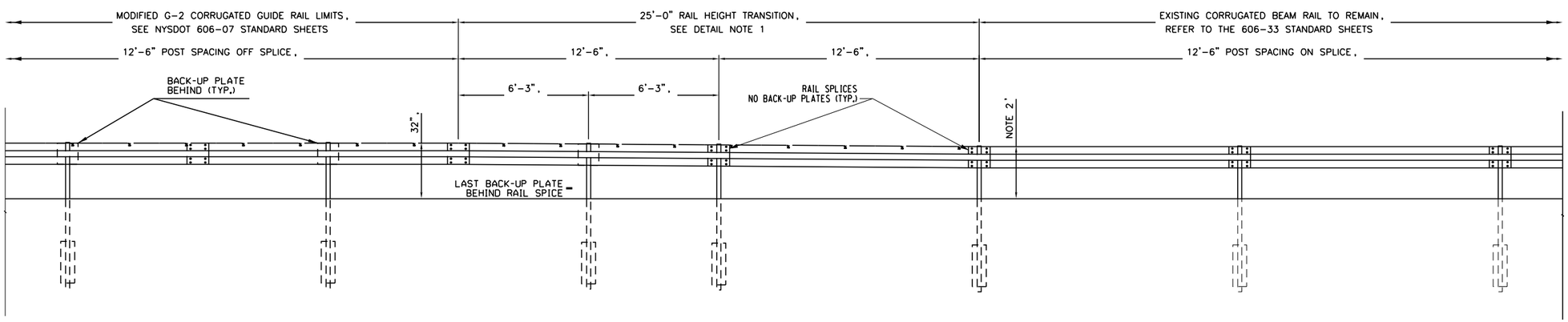

TRANSITION MODIFIED G-2 WEAK POST CORRUGATED BEAM TO EXISTING WEAK POST CORRUGATED BEAM GUIDE RAIL

N.T.S.

DETAIL NOTES: TRANSITION MODIFIED G-2 WEAK POST CORRUGATED BEAM TO EXISTING WEAK POST CORRUGATED BEAM GUIDE RAIL

1. TRANSITION FROM MODIFIED G-2 TO WEAK POST CORRUGATED SHALL BE CONSTRUCTED WITH NEW RAIL AND POSTS. POST SPACINGS SHALL BE AS INDICATED ABOVE. COST OF CONSTRUCTING TRANSITION TO BE INCLUDED UNDER ITEM 606.18.
2. EXISTING RAIL HEIGHT ACCEPATABLE BETWEEN 29" AND 35", PER TABLE 10-7 OF HIGHWAY DESIGN MANUAL

NEW YORK STATE OF OPPORTUNITY. Thruway Authority

U.S. CUSTOMARY STANDARD SHEET

MODIFIED G2 CORRUGATED RAIL AND HEAVY POST BLOCKED OUT RAIL TRANSITIONS INTO EXISTING CORRUGATED GUIDE RAILING SYSTEMS (DRAWING GR-3) (MAINTENANCE SUPPORT)

APPROVED NOVEMBER 1, 2018	ISSUED UNDER DB 18-005
/S/ PATRICK THOMPSON, P.E. DIRECTOR DESIGN SUPPORT SERVICES BUREAU	**TA 606-02**

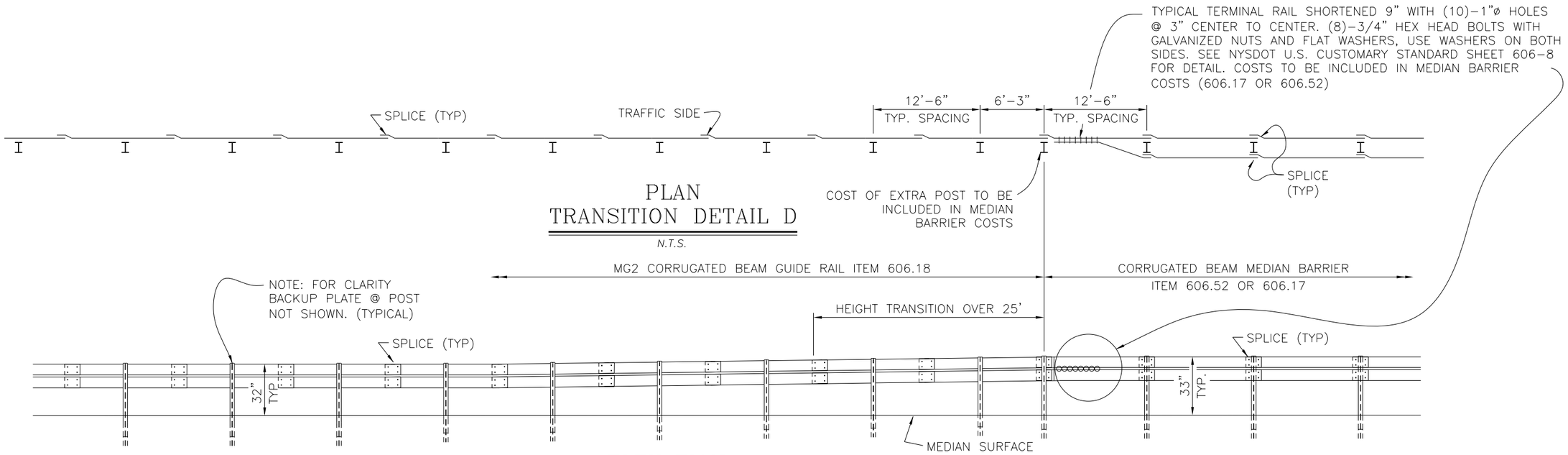

PLAN
TRANSITION DETAIL D

N.T.S.

ELEVATION
TRANSITION DETAIL D
CORRUGATED BEAM MEDIAN BARRIER TO
MG2 CORRUGATED BEAM GUIDE RAILING

N.T.S.

NEW YORK STATE OF OPPORTUNITY. | Thruway Authority

U.S. CUSTOMARY STANDARD SHEET

CORRUGATED BEAM MEDIAN BARRIER TO
MG2 CORRUGATED BEAM GUIDE RAILING
TRANSITION DETAIL D
(DRAWING GR-4)

APPROVED SEPTEMBER 21, 2016	ISSUED UNDER EI 16-001
/S/ PATRICK THOMPSON, P.E. DIRECTOR DESIGN SUPPORT SERVICES BUREAU	**TA 606-03**

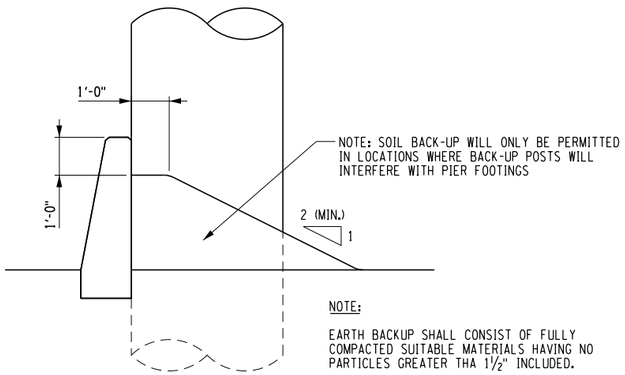

SECTION A-A

SINGLE-SLOPE PRECAST CONCRETE HALF SECTION BARRIER WITH EARTH BACKUP

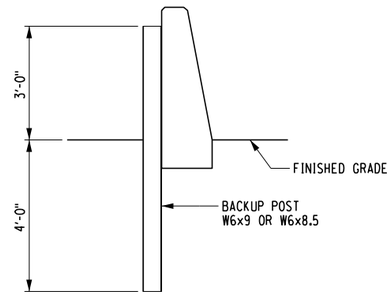

SECTION B-B

SINGLE-SLOPE CONCRETE HALF SECTION BARRIER WITH BACKUP POST

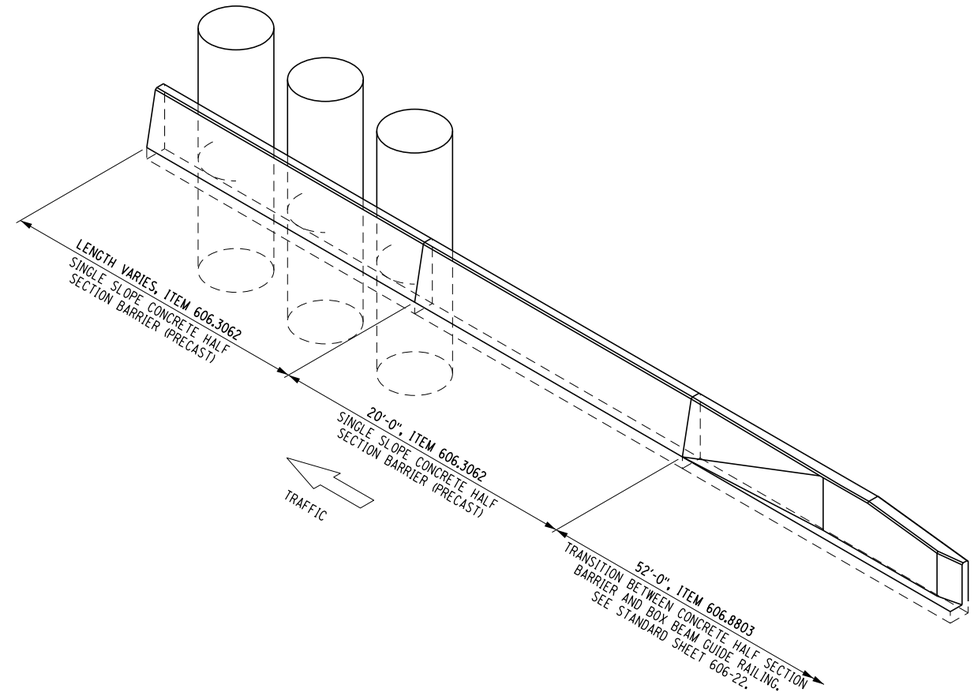

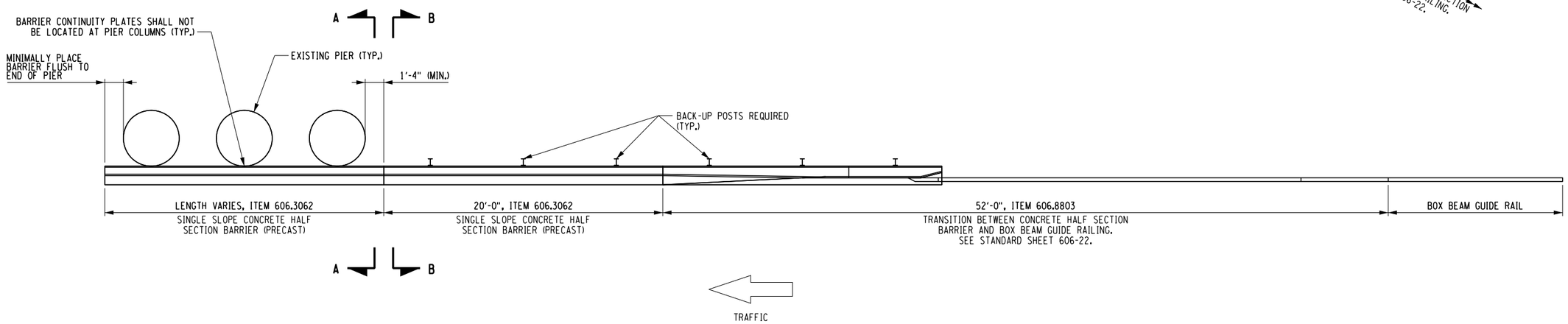

RIGHT SIDE APPROACH TO BRIDGE PIER

NEW YORK STATE OF OPPORTUNITY. Thruway Authority

U.S. CUSTOMARY STANDARD SHEET

BOX BEAM TO 42" SINGLE SLOPE HALF SECTION CONCRETE BARRIER PIER PROTECTION (DRAWING GR-5)

APPROVED NOVEMBER 1, 2018	ISSUED UNDER DB 18-005
/S/ PATRICK THOMPSON, P.E. DIRECTOR DESIGN SUPPORT SERVICES BUREAU	**TA 606-04**

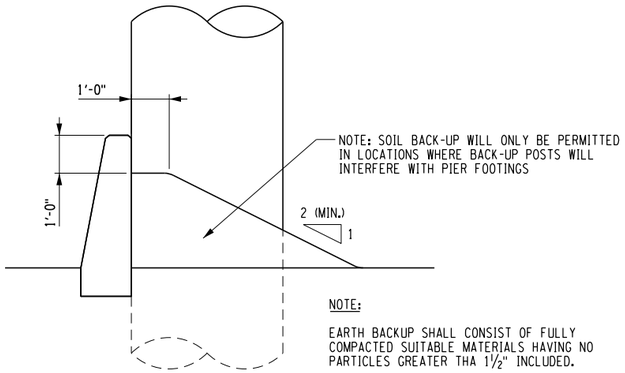

SECTION A-A

SINGLE-SLOPE PRECAST CONCRETE HALF SECTION BARRIER WITH EARTH BACKUP

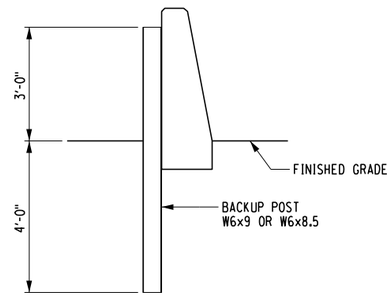

SECTION B-B

SINGLE-SLOPE CONCRETE HALF SECTION BARRIER WITH BACKUP POST

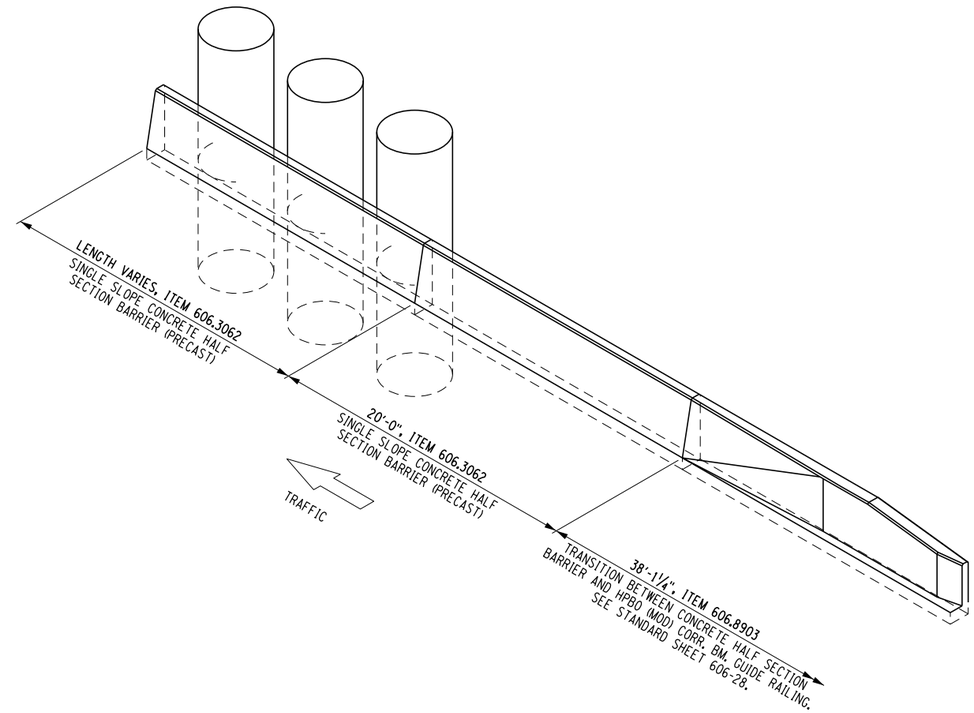

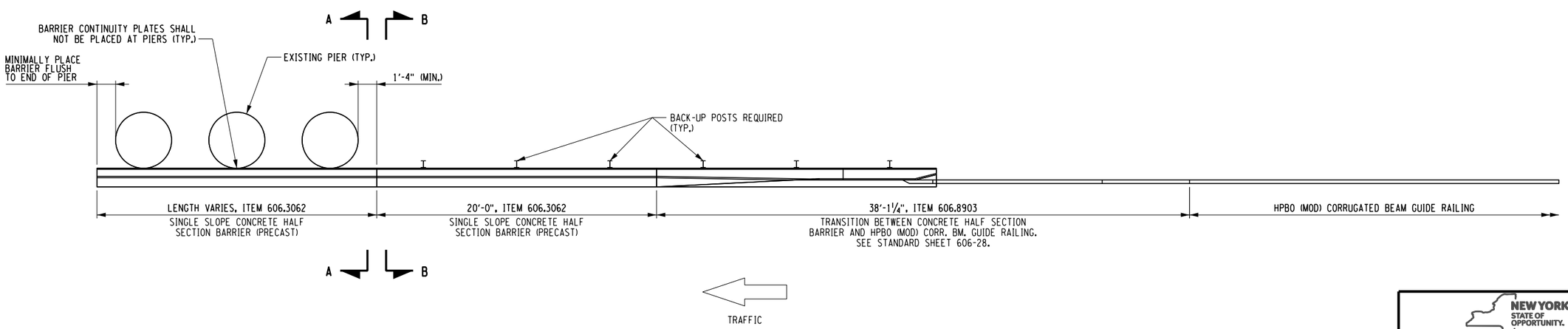

RIGHT SIDE APPROACH TO BRIDGE PIER

NEW YORK STATE OF OPPORTUNITY. | Thruway Authority

U.S. CUSTOMARY STANDARD SHEET

HPBO (MOD) CORR. BM. TO 42"
SINGLE SLOPE HALF SECTION
CONCRETE BARRIER PIER PROTECTION
(DRAWING GR-6)

APPROVED NOVEMBER 1, 2018	ISSUED UNDER DB 18-005
/S/ PATRICK THOMPSON, P.E. DIRECTOR DESIGN SUPPORT SERVICES BUREAU	**TA 606-05**

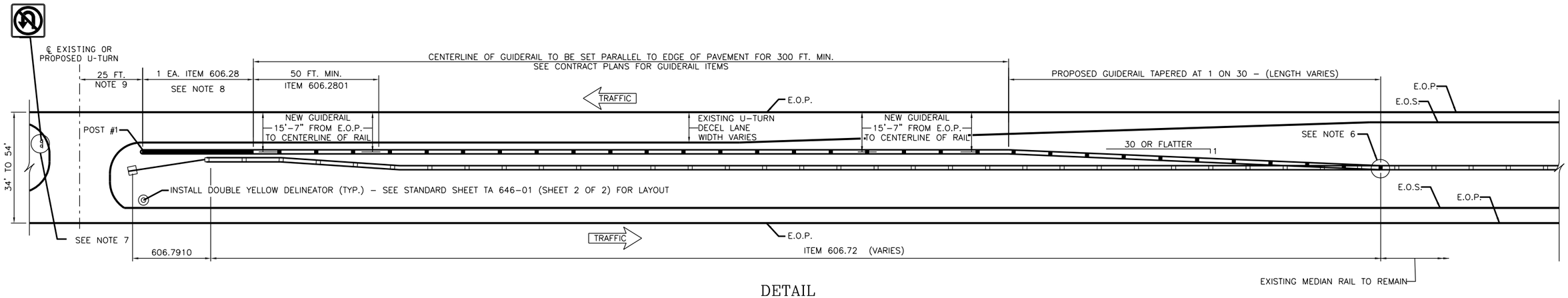

DETAIL
TYPICAL U-TURN MEDIAN RAIL LAYOUT FOR MEDIANS 34FT TO 54FT WIDE

N.T.S.

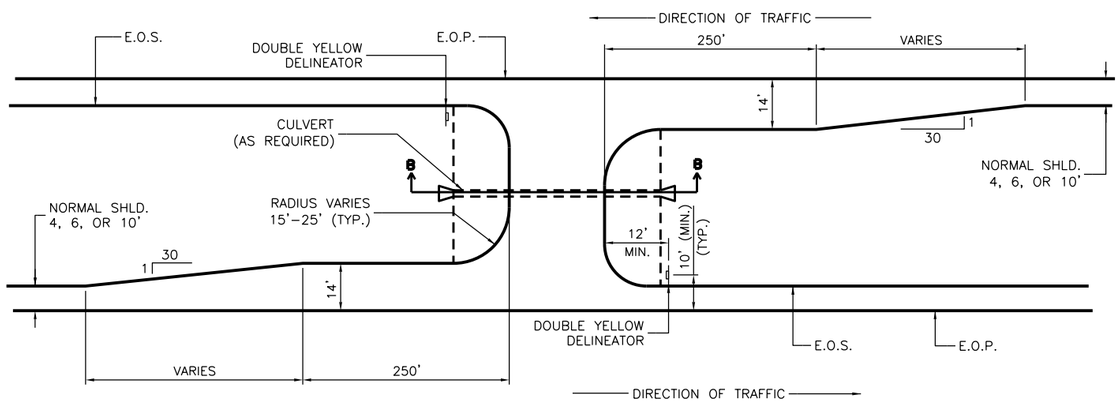

TYPICAL PLAN OF NEW CROSSOVER

N.T.S.

NOTES:

1. THIS DETAIL IS APPLICABLE WHERE OPPOSING E.O.P.'S ARE AT SIMILAR ELEVATIONS AND 34' OR GREATER APART. ALL OTHER U-TURN LAYOUTS REQUIRE INDIVIDUAL DETAILED LAY-OUTS.
2. DEPENDING UPON SITE CONDITIONS. FOR MEDIANS GREATER THAN 54', MEDIAN BARRIER CAN BE RELOCATED OUTSIDE OF THE CLEAR ZONE AND MAY NOT REQUIRE ATTENUATION.
3. SIGHT DISTANCE REQUIREMENTS SHALL BE CONFIRMED AND DOCUMENTED IF LESS THAN DESIRABLE.
4. SECTION B-B IS SUGGESTED ASPHALT THICKNESSES – DESIGNER SHALL FILL IN APPROPRIATE ASPHALT ITEM NUMBERS.
5. CULVERT IS NOT REQUIRED IF U-TURN IS LOCATED AT THE CREST OF A VERTICAL CURVE.
6. THIS CONNECTION MAY REQUIRE NON-STANDARD POST SPACING AND FIELD CUTTING GUIDE RAIL WHERE CONNECTING TO EXISTING MEDIAN BARRIER. SEE NOTE IN CONTRACT PROPOSAL ENTITLED "NON-STANDARD MEDIAN BARRIER/GUIDE RAIL POST SPACING"
7. EXISTING "NO U-TURN" SIGNS SHALL BE RESET A.O.B.E. UNDER ITEM 647.31.
8. PAYMENT LIMITS EXTEND 50 LF FROM THE OUTER END OF THE TERMINAL. AT THAT POINT, PAYMENT WILL BEGIN FOR HEAVY POST BLOCKED-OUT (MOD.) CORRUGATED BEAM MEDIAN BARRIER. RAIL HEIGHT AND WIDTH WILL TRANSITION ACROSS THE FIRST 12 1/2 FEET OF ITEM 606.2801. SPECIAL 9" AND 11" BLOCKOUT REQUIRED – SIMILAR TO NYSDOT STANDARD SHEET 606-29 SHEET 1 OF 3.
9. 25'-0" DIMENSION IS CRITICAL. THE CONTRACTOR SHALL BEGIN LAYOUT OF PROPOSED HPBO (MOD.) CORRUGATED BEAM MEDIAN BARRIER END TERMINAL BY MEASURING 25'-0" FROM THE CENTERLINE OF THE U-TURN TO POST NUMBER ONE (1).

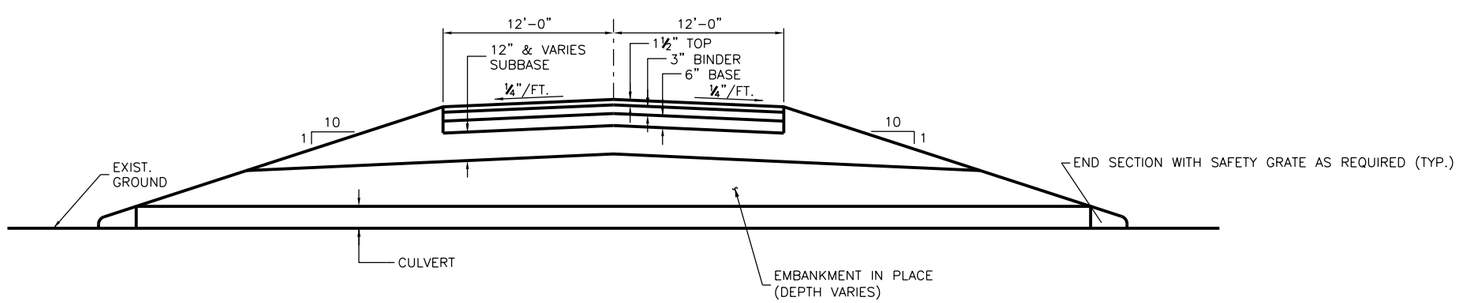

SECTION B-B

N.T.S.

NEW YORK STATE OF OPPORTUNITY. | Thruway Authority

U.S. CUSTOMARY STANDARD SHEET

TYPICAL U-TURN MEDIAN RAIL LAYOUT AND ROADWAY TRANSVERSE SECTION (DRAWING UT)

APPROVED JANUARY 1, 2020	ISSUED UNDER DB 19-002
/S/ PATRICK THOMPSON, P.E. DIRECTOR DESIGN SUPPORT SERVICES BUREAU	TA 606-06

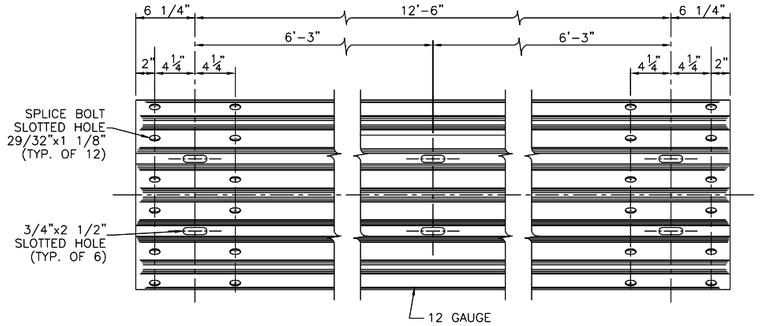

TYPICAL THRIE BEAM SECTION

SCALE: 1 1/2" = 1'-0"

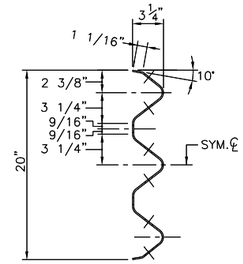

END VIEW OF TRANSITION

SCALE: 1 1/2" = 1'-0"

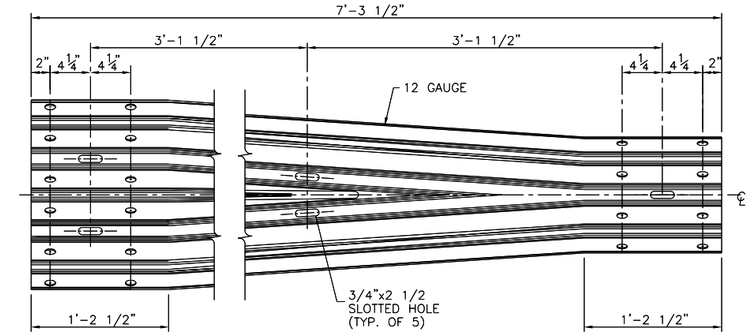

TRANSITION SECTION
THRIE BEAM TO CORRUGATED BEAM

SCALE: 1 1/2" = 1'-0"

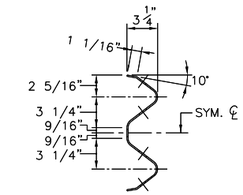

END VIEW OF TRANSITION

SCALE: 1 1/2" = 1'-0"

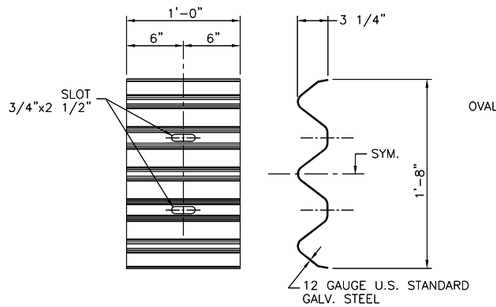

DETAIL OF BACK UP PLATE

(SEE NOTE 8)

SCALE: 1 1/2" = 1'-0"

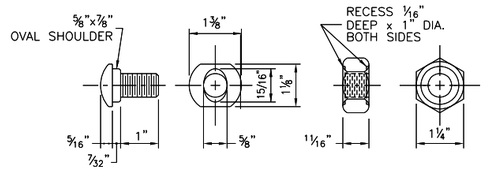

1 1/4" SPLICE BOLT/NUT

SCALE: 6" = 1'-0"

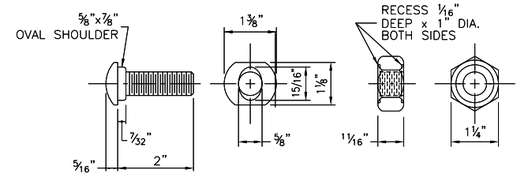

2" RAIL BLOCKOUT BOLT/NUT

SCALE: 6" = 1'-0"

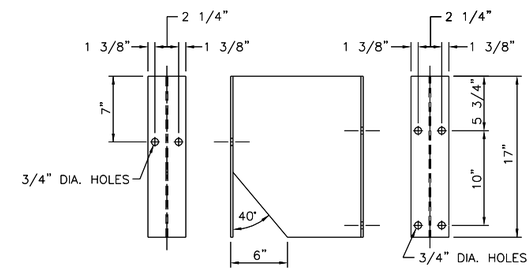

W14 x 22 BLOCKOUT DETAIL

SCALE: 1 1/2" = 1'-0"

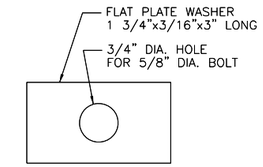

FLAT PLATE WASHER DETAIL
(FOR "W" BEAM)

N.T.S.

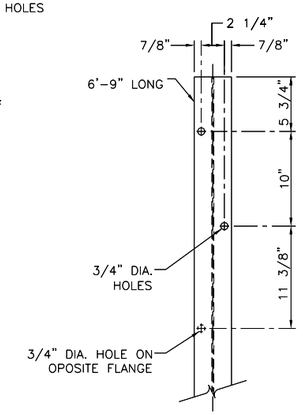

W6x9 POST DETAIL

SCALE: 1 1/2" = 1'-0"

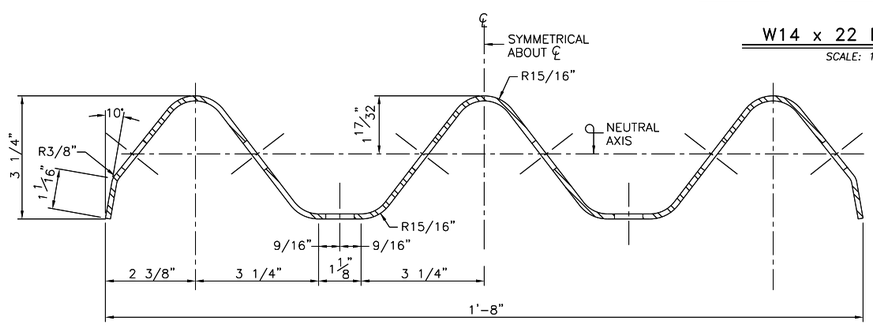

THRIE BEAM CROSS SECTION

SCALE: 6" = 1'-0"

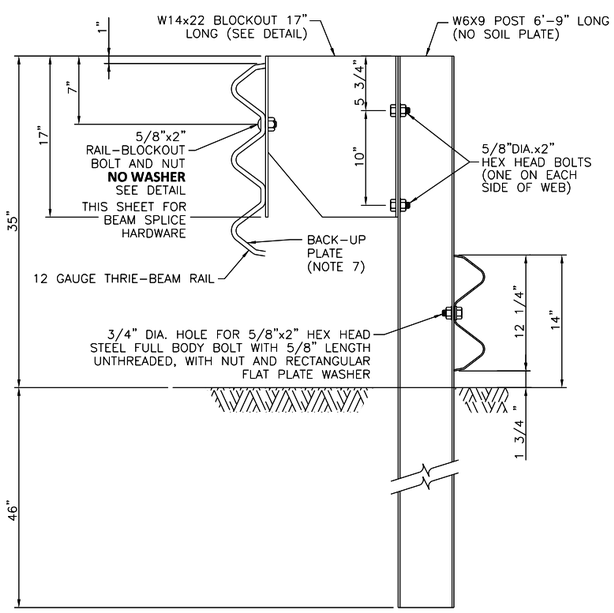

THRIE BEAM BLOCKOUT ASSEMBLY

SCALE: 1 1/2" = 1'-0"

NOTES:

1. ALL THRIE BEAM SECTIONS SHALL BE 12 GAUGE.
2. THE TRANSITION SECTION FROM CORRUGATED BEAM TO THRIE BEAM SHALL BE 12 GUAGE.
3. THE MATERIAL FROM WHICH THE THRIE BEAM IS FABRICATED SHALL CONFORM TO MATERIAL SPECIFICATION 710-20.
4. ALL COMPONENTS OF THRIE BEAM SYSTEM SHALL BE GALVANIZED IN ACCORDANCE WITH MATERIAL SPECIFICATION 719-01 AFTER FABRICATION.
5. WHEN HIGHWAY POSTS OCCUR WHERE THERE ARE NO HOLES IN STANDARD THRIE BEAM SECTION, HOLES SHALL BE DRILLED IN THE APPROPRIATE LOCATIONS AND THE GALVANIZING SHALL BE REPAIRED ACCORDING TO MATERIAL SPECIFICATION 719-01.
6. ALL RAILS, POST, BLOCKS AND HARDWARE SHALL BE GALVANIZED IN ACCORDANCE WITH THE PROVISIONS OF MATERIAL SUBSECTION 710-20.
7. THRIE BEAM BACK-UP PLATES SHALL BE USED AT ALL POSTS WHERE THRIE BEAM SPLICE DOES NOT OCCUR.
8. NORMAL POST SPACING IS 6'-3".
9. THE W6x8.5 IS AN ACCEPTABLE ALTERNATIVE TO THE W6x9.
10. THIS GUIDE RAIL SYSTEM IS BASED ON THE U.S. CUSTOMARY UNITS VERSION OF AASHTO'S TL-4 MODIFIED THRIE BEAM (SGR09b-METRIC UNITS). THE BARRIER IS ILLUSTRATED IN APPENDIX B OF AASHTO'S ROADSIDE DESIGN GUIDE.
11. MAXIMUM DYNAMIC DEFLECTION IS APPROXIMATELY 3 FT. FOR A 20,000-POUND SCHOOL BUS (56 MPH, 15° IMPACT ANGLE). SEE ACCEPTANCE LETTER B64.

NEW YORK STATE OF OPPORTUNITY. | Thruway Authority

U.S. CUSTOMARY STANDARD SHEET

MODIFIED THRIE BEAM GUIDE RAILING
WITH ROCK RAIL
(SHEET 1 OF 2)

APPROVED JANUARY 1, 2019

/S/ PATRICK THOMPSON, P.E.
DIRECTOR DESIGN SUPPORT
SERVICES BUREAU

ISSUED UNDER DB 18-006

TA 606-07

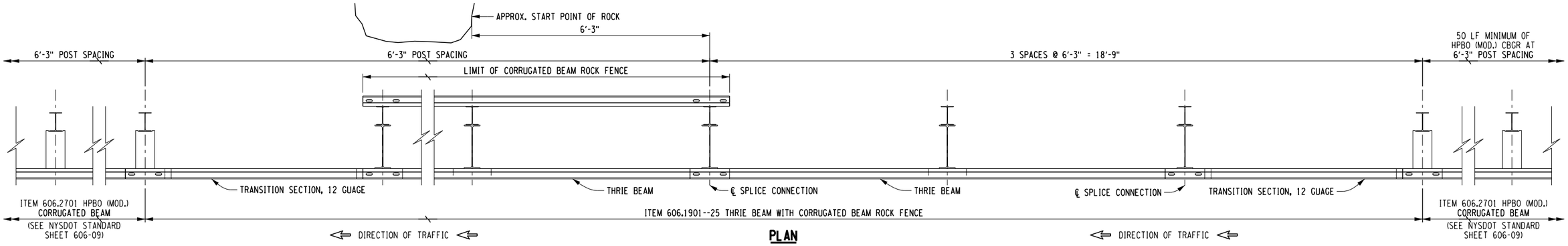

PLAN

SCALE: 3/8" = 1'-0"

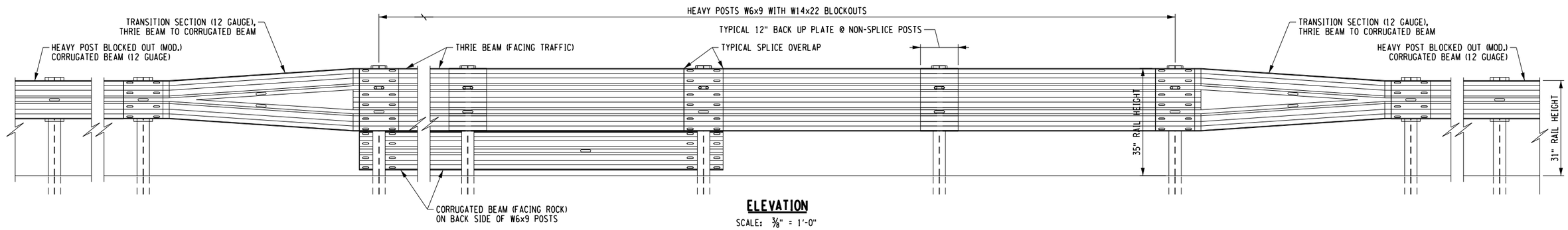

ELEVATION

SCALE: 3/8" = 1'-0"

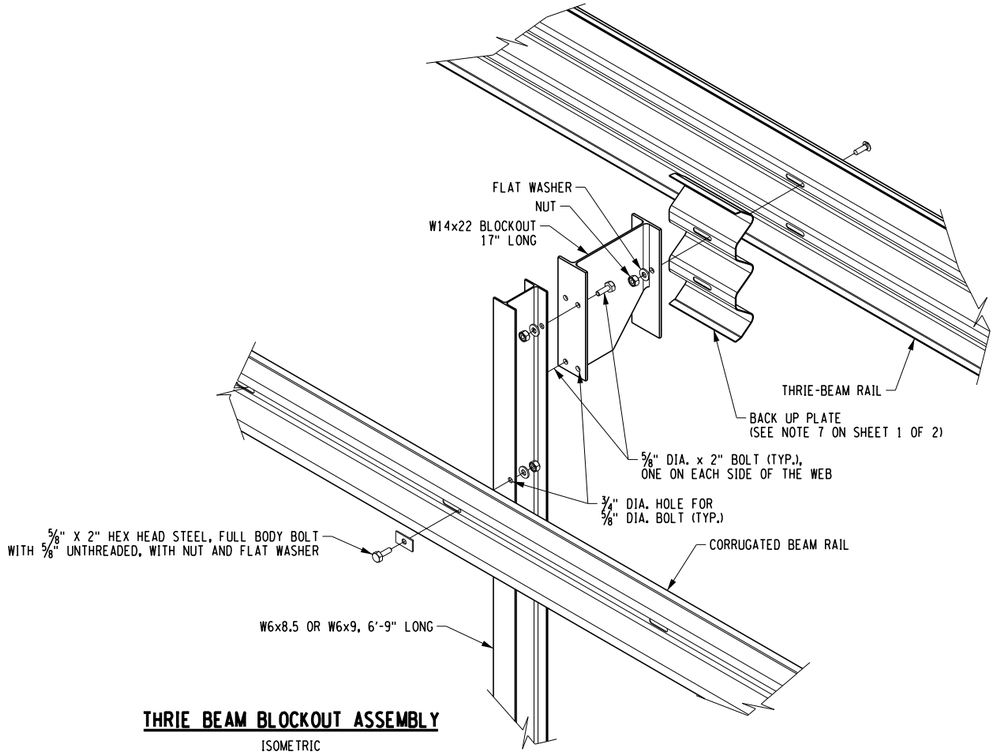

THRIE BEAM BLOCKOUT ASSEMBLY

ISOMETRIC
SCALE: 1" = 2'-0"

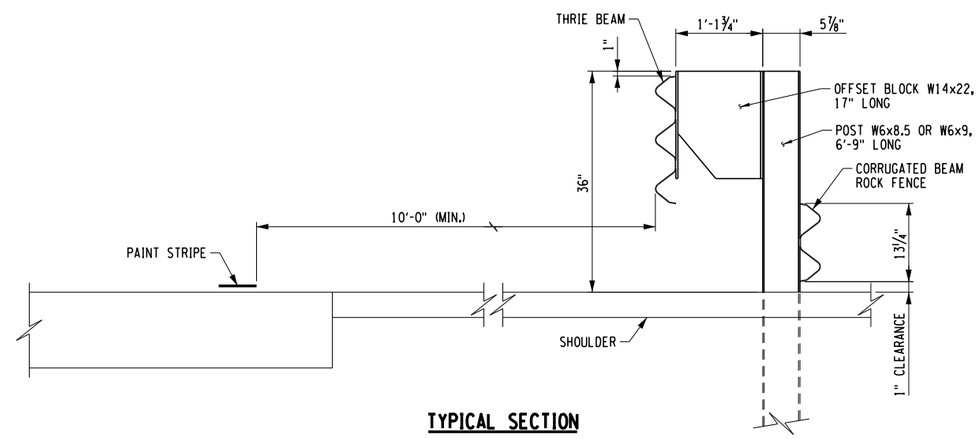

TYPICAL SECTION

NTS

NEW YORK STATE OF OPPORTUNITY. | Thruway Authority

U.S. CUSTOMARY STANDARD SHEET

MODIFIED THRIE BEAM GUIDE RAILING
WITH ROCK RAIL
(SHEET 2 OF 2)

APPROVED JANUARY 1, 2019	ISSUED UNDER DB 18-006
/S/ PATRICK THOMPSON, P.E. DIRECTOR DESIGN SUPPORT SERVICES BUREAU	**TA 606-07**

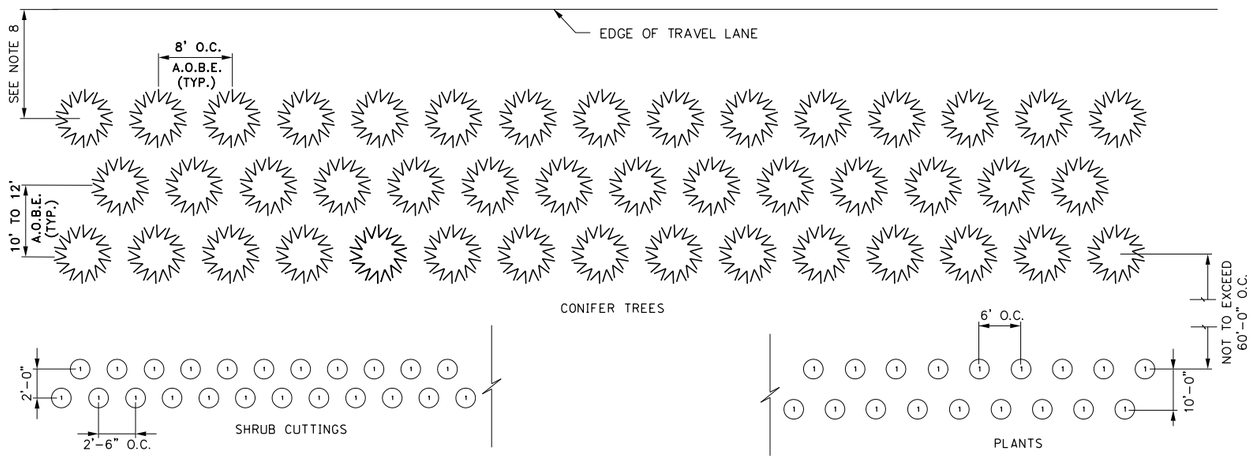

TYPICAL LIVING SNOW FENCE
DETAIL "A"–UNCONSTRAINED ROW LIMITS
(SEE PLANS OR PROPOSAL FOR LOCATIONS)
N.T.S.

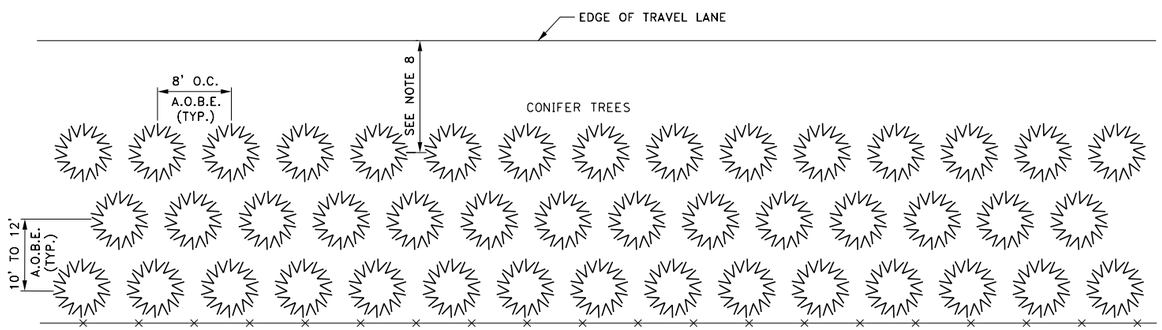

TYPICAL CONIFEROUS TREE
LIVING SNOW FENCE
DETAIL "B" – CONSTRAINED ROW LIMITS
(SEE PLANS OR PROPOSAL FOR LOCATIONS)
N.T.S.

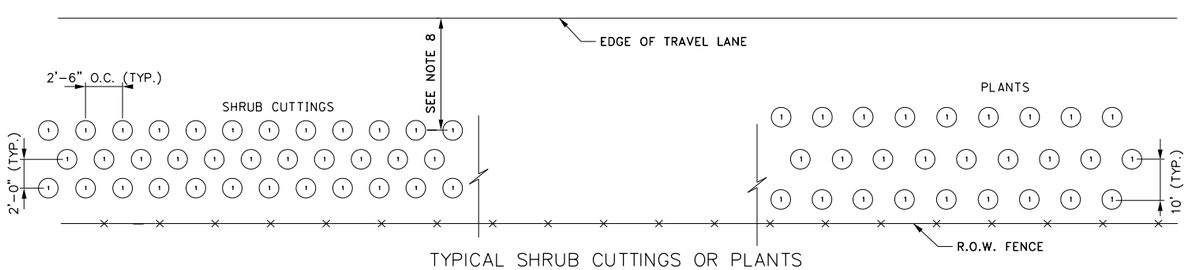

TYPICAL SHRUB CUTTINGS OR PLANTS
LIVING SNOW FENCE
DETAIL "C" – CONSTRAINED ROW LIMITS
(SEE PLANS OR PROPOSAL FOR LOCATIONS)
N.T.S.

LIVING SNOW FENCE NOTES:

1. ALL PLANTING SHALL BE IN ACCORDANCE WITH THE REVISED STANDARD SPECIFICATIONS WITHIN SECTIONS 610–615 AND SECTION 713 OF THE NYSDOT STANDARD SPECIFICATIONS.
2. THE PLANT LOCATIONS SHOWN ON THE PLANS ARE APPROXIMATE. FINAL DETERMINATION BY SPECIES FOR THE SPECIFIC AREA LOCATIONS OF PLANTS WITH THE SAME ITEM NUMBER WILL BE DEPENDENT ON SITE CONDITIONS AND MAY ALSO VARY FROM WHAT IS SHOWN ON THE PLANS. THESE AREA LOCATIONS SHALL BE DETERMINED BY THE THRUWAY PROJECT ENGINEER (TPE) OR LANDSCAPE ARCHITECT (LA) BEFORE THE CONTRACTOR STAKES OUT OR LOCATES PLANTS ON THE GROUND FOR APPROVAL. EXACT LOCATIONS SHALL BE DETERMINED BY THE TPE OR LA.
3. ALL PLANTINGS SHALL HAVE 6 FOOT MINIMUM OFFSETS FROM BURIED FIBER OPTIC LINES.
4. THE CONTRACTOR SHALL STAKE OUT OR LOCATE ALL PLANTS ON THE GROUND FOR APPROVAL BY THE TPE OR LA BEFORE ANY PLANT PITS ARE EXCAVATED.
5. THE UNIT PRICE BID FOR EACH PLANT SHALL INCLUDE THE COST OF ALL LABOR, MATERIALS, AND EQUIPMENT, INCLUDING INITIAL WATERING AND MULCH (TYPE A SEASONED WOOD CHIPS), COMPOST, PLANTS, PLANT PROTECTION MATERIALS, AND TOPSOIL NECESSARY TO SATISFACTORILY COMPLETE THE WORK.
6. ALL DISTURBED AREAS OUTSIDE OF TREE PITS SHALL BE GRADED A.O.B.E. AND SEEDED WITH ITEM 610.1601 – TURF ESTABLISHMENT ROADSIDE.
7. THE CONTRACTOR MAY SUBSTITUTE LARGER TREES OF THE SAME SPECIES AND VARIETY THAT MEET THE SPECIFICATIONS. SUBSTITUTIONS WILL BE AT NO ADDITIONAL COST TO THE AUTHORITY.
8. OFFSET 60 FT MINIMUM WHERE R.O.W. BOUNDARY PERMITS. OFFSET SHALL NOT BE LESS THAN 42 FT.
9. SNOW FENCE PLANTINGS SHALL BE MAINTAINED BY THE CONTRACTOR UNDER ITEM 610.19 – WATERING VEGETATION AND ITEM 611.19030024 – POST PLANTING CARE WITH REPLACEMENT – CONIFEROUS TREES

NEW YORK STATE OF OPPORTUNITY. | Thruway Authority

U.S. CUSTOMARY STANDARD SHEET

LIVING SNOW FENCES

APPROVED OCTOBER 27, 2016

/S/ PATRICK THOMPSON, P.E.
DIRECTOR DESIGN SUPPORT SERVICES BUREAU

ISSUED UNDER EI 16-001

TA 611-01

TABLE NY1-A
BARRIER VEHICLE USE REQUIREMENTS
(LONG TERM, INTERMEDIATE TERM & SHORT TERM STATIONARY CLOSURES)

CLOSURE TYPE	EXPOSURE CONDITION [1]	USE REQUIREMENTS [4, 5]			
		FREEWAY	NON-FREEWAY (PRECONSTRUCTION POSTED SPEED LIMIT)		
			≥ 45 MPH	35-40 MPH	≤ 30 MPH
LANE CLOSURE	WORKERS ON FOOT OR IN VEHICLES EXPOSED TO TRAFFIC	REQUIRED [3]	REQUIRED [3]	REQUIRED [3]	OPTIONAL [2]
	NON-TRAVERSABLE HAZARD (IE. EQUIPMENT, MATERIALS, EXCAVATION) ONLY NO WORKERS EXPOSED	REQUIRED [3]	REQUIRED [3]	OPTIONAL [2]	OPTIONAL [2]
SHOULDER CLOSURE	WORKERS ON FOOT OR IN VEHICLES EXPOSED TO TRAFFIC	REQUIRED [3]	REQUIRED [3]	OPTIONAL [2]	OPTIONAL [2]
	NON-TRAVERSABLE HAZARD (IE. EQUIPMENT, MATERIALS, EXCAVATION) ONLY NO WORKERS EXPOSED	REQUIRED [3]	OPTIONAL [2]	OPTIONAL [2]	OPTIONAL [2]

1. THE EXPOSURE CONDITIONS DESCRIBED IN TABLE NY1-A ASSUMES THERE IS NO POSITIVE PROTECTION (TEMPORARY TRAFFIC BARRIER) PRESENT. WHERE WORKERS OR HAZARDS ARE PROTECTED BY A TEMPORARY TRAFFIC BARRIER, BARRIER VEHICLES ARE NOT REQUIRED.
2. WHERE THE REQUIREMENT IS "OPTIONAL", EITHER A BARRIER VEHICLE OR THE STANDARD LONGITUDINAL BUFFER SPACE (TABLE 6C-2) SHALL BE PROVIDED.
3. REQUIREMENTS SHALL INCLUDE PROVIDING A SEPARATE BARRIER VEHICLE FOR EACH CLOSED LANE AND EACH CLOSED SHOULDER 8 FEET OR GREATER IN WIDTH. IF THE WORK SPACE MOVES WITHIN THE STATIONARY CLOSURE, THE BARRIER VEHICLE SHALL BE REPOSITIONED ACCORDINGLY. BARRIER VEHICLES PROTECTING NON-TRAVERSABLE HAZARDS SHALL REMAIN IN PLACE DURING BOTH WORKING AND NON-WORKING HOURS UNTIL THE HAZARD NO LONGER EXISTS. EXCEPTIONS TO THESE REQUIREMENTS MAY BE MADE, AS APPROVED BY THE ENGINEER, WHERE BARRIER VEHICLE PLACEMENT WOULD BE INEFFECTIVE OR WOULD INTERFERE WITH THE SAFE OPERATION OF TRAFFIC.
4. BARRIER VEHICLES ARE NOT REQUIRED FOR MILLING AND/OR PAVING OPERATIONS, BUT THE STANDARD LONGITUDINAL BUFFER SPACE (TABLE 6C-2) SHALL BE PROVIDED.
5. BARRIER VEHICLES ARE NOT REQUIRED FOR FLAGGING OPERATIONS.

TABLE NY1-B
SHADOW VEHICLE USE REQUIREMENTS
(MOBILE CLOSURES [1])

CLOSURE TYPE	EXPOSURE CONDITION	USE REQUIREMENTS			
		FREEWAY	NON-FREEWAY (PRECONSTRUCTION POSTED SPEED LIMIT)		
			≥ 45 MPH	35-40 MPH	≤ 30 MPH
LANE CLOSURE	WHEN ANY WORKERS, VEHICLES, OR OTHER HAZARD IS EXPOSED TO TRAFFIC	REQUIRED [2,4]	REQUIRED [2,4]	REQUIRED [2,4]	REQUIRED [3,4]
SHOULDER CLOSURE	WHEN ANY WORKERS, VEHICLES, OR OTHER HAZARD IS EXPOSED TO TRAFFIC	REQUIRED [2,4]	REQUIRED [2,4]	REQUIRED [3,4]	REQUIRED [3,4]

1. A MOBILE CLOSURE SHALL BE USED FOR ANY WORK ACTIVITY THAT MOVES CONTINUOUSLY OR INTERMITTENTLY ALONG THE TRAVELED WAY OR SHOULDER SLOWER THAN THE PREVAILING SPEED OF TRAFFIC. CHANNELIZING DEVICES ARE NOT USED FOR MOBILE CLOSURES.
2. SHADOW VEHICLES SHALL BE EQUIPPED WITH AN APPROVED REAR MOUNTED ATTENUATOR (TRUCK-MOUNTED OR TRAILER MOUNTED) FOR THE FOLLOWING MOBILE CLOSURES: LANE CLOSURES ON FREEWAYS, LANE CLOSURES ON NON-FREEWAY ROADWAYS HAVING A PRE-CONSTRUCTION POSTED SPEED LIMIT OF 35 MPH OR MORE, SHOULDER CLOSURES ON FREEWAYS, AND SHOULDER CLOSURES ON NON-FREEWAY ROADWAYS HAVING A PRE-CONSTRUCTION SPEED LIMIT OF 45 MPH OR MORE.
3. FOR MOBILE LANE CLOSURES ON NON-FREEWAY ROADWAYS HAVING A PRE-CONSTRUCTION POSTED SPEED LIMIT OF 30 MPH OR LESS AND MOBILE SHOULDER CLOSURES ON NON-FREEWAY ROADWAYS HAVING A PRE-CONSTRUCTION SPEED LIMIT OF 40 MPH OR LESS, SHADOW VEHICLES ARE NOT REQUIRED TO BE EQUIPPED WITH A REAR MOUNTED ATTENUATOR.
4. A SHADOW VEHICLE IS USED TO PROTECT EXPOSED WORKERS (ON FOOT OR IN A VEHICLE) AND SHALL BE REQUIRED FOR ALL MOBILE CLOSURES. SHADOW VEHICLE REQUIREMENTS SHALL INCLUDE PROVIDING A SEPARATE SHADOW VEHICLE FOR EACH CLOSED LANE AND EACH CLOSED SHOULDER 8 FEET OR GREATER IN WIDTH. ADDITIONAL SHADOW VEHICLES MAY BE REQUIRED TO PROMOTE THE SAFE OPERATION OF TRAFFIC AND THE INCREASED PROTECTION OF EXPOSED WORKERS, AS DIRECTED BY THE ENGINEER.

TABLE NY2-A
PLACEMENT DISTANCE FOR BARRIER VEHICLES

PRECONSTRUCTION POSTED SPEED LIMIT (MPH)	PLACEMENT DISTANCE (FT) BARRIER VEHICLES			
	18000 LBS.		24000 LBS.	
	MINIMUM	MAXIMUM	MINIMUM	MAXIMUM
> 55	100 FT	200 FT	100 FT	200 FT
45 - 55	100 FT	200 FT	80 FT	160 FT
< 45	80 FT	160 FT	50 FT	100 FT

AS DEFINED IN NYSDOT STANDARD SPECIFICATION 619:

BARRIER VEHICLE: VEHICLE USED FOR STATIONARY SHOULDER CLOSURES, LANE CLOSURES AND OTHER STATIONARY WORK ZONES.

MINIMUM DISTANCE SHOWN REFLECTS THE ACTUAL ROLL AHEAD DISTANCE FROM MANUFACTURER.

TABLE NY2-B
PLACEMENT DISTANCE FOR SHADOW VEHICLES

PRECONSTRUCTION POSTED SPEED LIMIT (MPH)	PLACEMENT DISTANCE (FT) SHADOW VEHICLES			
	18000 LBS.		24000 LBS.	
	MINIMUM	MAXIMUM	MINIMUM	MAXIMUM
> 55	230 FT	325 FT	180 FT	280 FT
45 - 55	180 FT	280 FT	150 FT	250 FT
< 45	100 FT	200 FT	100 FT	200 FT

AS DEFINED IN NYSDOT STANDARD SPECIFICATION 619:

SHADOW VEHICLE: VEHICLE USED FOR MOBILE OR SHORT DURATION WORK OPERATIONS.

MINIMUM DISTANCE SHOWN REFLECTS THE ACTUAL ROLL AHEAD DISTANCE FROM MANUFACTURER.

TABLE NY6H-3
ADVANCE WARNING SIGN SPACING

ROAD TYPE	DISTANCE BETWEEN SIGNS A (FT)	B (FT)	C (FT)	SIGN LEGEND XX	YY
URBAN (130 MPH*)	100	100	100	AHEAD	AHEAD
URBAN (35-40 MPH*)	200	200	200	AHEAD	AHEAD
URBAN (w45 MPH*)	350	350	350	1000 FT	AHEAD
RURAL	500	500	500	1500 FT	1000 FT
EXPRESSWAY/FREEWAY	1,000	1,500	2,640	1 MILE	1/2 MILE

* PRECONSTRUCTION POSTED SPEED LIMIT

URBAN
ANY AREA EXHIBITING AT LEAST TWO OF THE FOLLOWING CHARACTERISTICS: SIDEWALKS, BICYCLE USAGE, CURBING, CLOSED DRAINAGE SYSTEMS, DRIVEWAY DENSITIES GREATER THAN 24 DRIVEWAYS PER MILE, MINOR COMMERCIAL DRIVEWAY DENSITIES OF 10 DRIVEWAYS PER MILE OR GREATER, MAJOR COMMERCIAL DRIVEWAYS, NUMEROUS RIGHT-OF-WAY CONSTRAINTS, HIGH DENSITY OF CROSS STREETS, OPERATING SPEEDS OF 45 MPH OR LESS.

RURAL:
ANY AREA EXHIBITING NO MORE THAN ONE OF ABOVE CHARACTERISTICS.

EXPRESSWAY
DIVIDED HIGHWAYS FOR THROUGH TRAFFIC WITH FULL OR PARTIAL CONTROL OF ACCESS AND GENERALLY WITH GRADE SEPARATIONS AT MAJOR CROSSROADS.

FREEWAY/INTERSTATE
LOCAL OR INTERREGIONAL HIGH-SPEED, DIVIDED, HIGH-VOLUME FACILITIES WITH FULL OR PARTIAL CONTROL OF ACCESS.

THRUWAY WORK DURATION DEFINITIONS

LONG-TERM STATIONARYIS WORK THAT OCCUPIES A LOCATION MORE THAN 3 CONSECUTIVE DAYS.

INTERMEDIATE-TERM STATIONARYS WORK THAT OCCUPIES A LOCATION MORE THAN ONE DAYLIGHT PERIOD UP TO 3 CONSECUTIVE DAYS, OR NIGHTTIME WORK LASTING MORE THAN 1 HOUR.

SHORT-TERM STATIONARYIS DAYTIME WORK THAT OCCUPIES A LOCATION WITHIN A SINGLE DAYLIGHT PERIOD.

SHORT DURATION IS DAYTIME WORK THAT OCCUPIES A LOCATION UP TO 2 HOURS, OR NIGHTTIME WORK LASTING UP TO 1 HOUR.

MOBILE IS WORK THAT MOVES INTERMITTENTLY OR CONTINUOUSLY.

TABLE 619-4
FLARE RATES FOR POSITIVE BARRIER

TYPE OF POSITIVE BARRIER	PRECONSTRUCTION POSTED SPEED LIMIT 30 MPH	40 MPH	50 MPH	55 MPH	65 MPH
TEMPORARY CONCRETE BARRIER	8:1	11:1	14:1	16:1	20:1
BOX BEAM OR HEAVY POST CORRUGATED BEAM	7:1	9:1	11:1	12:1	15:1

TABLE 6C-2
LONGITUDINAL BUFFER SPACE

PRECONSTRUCTION POSTED SPEED LIMIT (MPH)	DISTANCE
25	155 FT
30	200 FT
35	250 FT
40	305 FT
45	360 FT
50	425 FT
55	495 FT
60	570 FT
65	645 FT

TABLE 6H-4 FORMULAS FOR DETERMINING TAPER LENGTHS

SPEED LIMIT (S) (MPH)	TAPER LENGTH (L) (FEET)
40 MPH OR LESS	$L = WS^2/60$
45 MPH OR MORE	$L = WS$

L = TAPER LENGTH (FEET)
W = WIDTH OF OFFSET (FEET)
S = PRE-CONSTRUCTION POSTED SPEED LIMIT (MPH)

STANDARD TAPER LENGTHS

LATERAL SHIFT OF TRAFFIC FLOW PATH	WORK ZONE PRE-CONSTRUCTION POSTED SPEED LIMIT 25 MPH	30 MPH	35 MPH	40 MPH	45 MPH	50 MPH	55 MPH	60 MPH	65 MPH
4 FT	40 FT	60 FT	80 FT	105 FT	180 FT	200 FT	220 FT	240 FT	260 FT
5 FT	50 FT	75 FT	100 FT	135 FT	225 FT	250 FT	275 FT	300 FT	325 FT
6 FT	65 FT	90 FT	125 FT	160 FT	270 FT	300 FT	330 FT	360 FT	390 FT
7 FT	75 FT	105 FT	145 FT	185 FT	315 FT	350 FT	385 FT	420 FT	455 FT
8 FT	85 FT	120 FT	165 FT	215 FT	360 FT	400 FT	440 FT	480 FT	520 FT
9 FT	95 FT	135 FT	185 FT	240 FT	405 FT	450 FT	495 FT	540 FT	585 FT
10 FT	105 FT	150 FT	205 FT	265 FT	450 FT	500 FT	550 FT	600 FT	650 FT
11 FT	115 FT	165 FT	225 FT	295 FT	495 FT	550 FT	605 FT	660 FT	715 FT
12 FT	125 FT	180 FT	245 FT	320 FT	540 FT	600 FT	660 FT	720 FT	780 FT

WORK ZONE TRAFFIC CONTROL LEGEND

SYMBOL	DESCRIPTION
	ARROW PANEL
	ARROW PANEL, CAUTION MODE
	ARROW PANEL SUPPORT OR TRAILER
	CHANGEABLE MESSAGE SIGN (PVMS)
	CHANNELIZING DEVICE
	CRASH CUSHION/TEMPORARY IMPACT ATTENUATOR
	DIRECTION OF TEMPORARY TRAFFIC DETOUR
	DIRECTION OF TRAFFIC
	FLAGGER
	FLAG TREE
	LUMINAIRE
	PAVEMENT MARKINGS THAT SHALL BE REMOVED FOR A LONG TERM PROJECT
	SIGN, TEMPORARY
	TEMPORARY BARRIER
	TEMPORARY BARRIER WITH WARNING LIGHTS
	TRAFFIC OR PEDESTRIAN SIGNAL
	TYPE III BARRICADE
	WARNING LIGHTS
	WORK SPACE
	WORK VEHICLE
	WORK VEHICLE W/ TRUCK MOUNTED ATTENUATOR
	TEMP/INTERIM PAVEMENT MARKING

TABLE 6C-3
TAPER LENGTH CRITERIA FOR WORK ZONES

TYPE OF TAPER	TAPER LENGTH (L)
MERGING TAPER	L
SHIFTING TAPER	L/2
SHOULDER TAPER	L/3
ONE-LANE, TWO-WAY TRAFFIC TAPER	100 FT MAXIMUM
DOWNSTREAM TAPER	100 FT PER LANE

NEW YORK STATE OF OPPORTUNITY. | Thruway Authority

U.S. CUSTOMARY STANDARD SHEET

WORK ZONE TRAFFIC CONTROL TABLES AND LEGEND (DRAWING TL)

APPROVED SEPTEMBER 21, 2016

/S/ PATRICK THOMPSON, P.E.
DIRECTOR DESIGN SUPPORT SERVICES BUREAU

ISSUED UNDER EI 16-001

TA 619-01

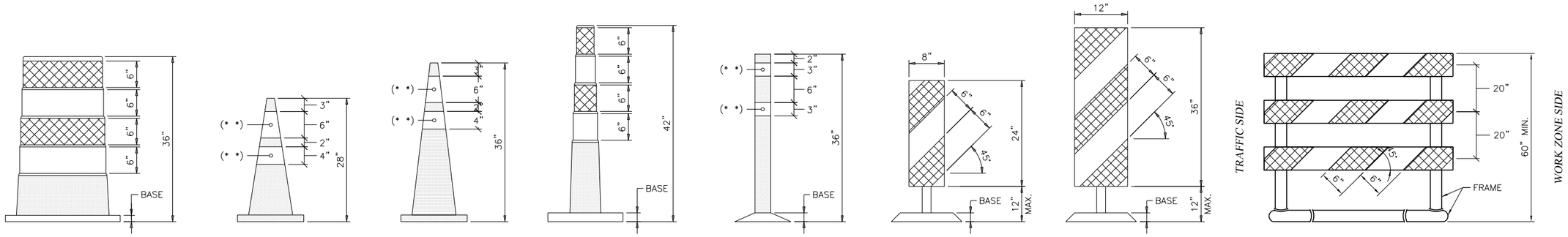

CHANNELIZING DEVICES

N.T.S.

GENERAL NOTES:

1. THE ENGINEER SHALL APPROVE THE CONDITION OF ALL TEMPORARY TRAFFIC CONTROL DEVICES PRIOR TO USE. THE ENGINEER SHALL ALSO REVIEW THE PROPOSED WORK ZONE TRAFFIC CONTROL PLAN FOR PRECISE DEVICE POSITIONING PRIOR TO INSTALLATION.

2. ALL SIGNS SHALL CONFORM TO THE MANUAL ON UNIFORM TRAFFIC CONTROL DEVICES (MUTCD). ORANGE SIGNS ON RIGID PANELS SHALL BE FLUORESCENT-ORANGE ASTM TYPE IX (CLASS E) RETROREFLECTIVE SHEETING. ALL OTHER COLORS OF CONSTRUCTION SIGN FACES ON RIGID PANELS SHALL BE ASTM TYPE III (CLASS B) REFLECTIVE SHEETING.

3. EXISTING SPEED LIMIT SIGNS WITHIN THE WORK ZONE SHALL BE COMPLETELY COVERED TO AVOID CONFLICT WITH THE WORK ZONE SPEED LIMIT SIGNS.

4. WHEN A SPEED DISPLAY TRAILER IS DEPLOYED, IT MAY BE USED AS A SUBSTITUTE FOR THE SECOND "WORK ZONE/SPEED LIMIT 45" SIGN (G20-5AP/R2-1). THE UNIT SHALL BE PROVIDED IN ACCORDANCE WITH THE CONTRACT SPECIFICATIONS. WHEN NOT IN OPERATION, THE SPEED DISPLAY TRAILER SHALL BE REMOVED FROM THE WORK ZONE.

5. CHANNELIZING DEVICES SHALL CONFORM TO THE REQUIREMENTS OF THE MUTCD AND SECTION 729 OF THE STANDARD SPECIFICATIONS WITH THE EXCEPTION THAT SHEETING REQUIREMENTS SHALL BE AS SPECIFIED ON THIS DRAWING. CHANNELIZING DEVICE TYPE AND SPACING REQUIREMENTS SHALL BE IN ACCORDANCE WITH SECTION 619 OF THE STANDARD SPECIFICATIONS.

6. ARROW PANELS SHALL CONFORM TO SECTION 729-15 OF THE STANDARD SPECIFICATIONS. THE ADVANCE WARNING ARROW DISPLAY SHALL BE A FULL FLASHING ARROW ONLY. CHEVRONS AND SEQUENTIAL ARROW DISPLAYS SHALL NOT BE PERMITTED. THE CAUTION MODE DISPLAY SHALL BE FOUR FLASHING CORNERS. FLASHING BAR DISPLAYS SHALL NOT BE PERMITTED.

7. THERE SHALL BE NO WORK ACTIVITY, EQUIPMENT, VEHICLES AND/OR MATERIALS LOCATED WITHIN THE BUFFER SPACE. THE SAME SHALL ALSO APPLY TO THE SPACE BETWEEN THE BARRIER VEHICLE(S) AND THE ACTIVE WORK AREA (BARRIER VEHICLE PLACEMENT DISTANCE).

8. THE REAR FACE OF A TRUCK MOUNTED ATTENUATOR DEVICE, WHEN IN THE HORIZONTAL OR OPERATING POSITION (PROTECTIVE MODE), SHALL BE MARKED WITH 4-INCH WIDE NON-REFLECTIVE BLACK STRIPES ON HIGH RETROREFLECTIVE YELLOW SHEETING IN AN UPWARD POINTING V-SHAPED (INVERTED V) STRIPING PATTERN. REFLECTIVE SHEETING SHALL CONFORM TO 730-05 REFLECTIVE SHEETING ASTM TYPE I (CLASS A), ASTM TYPE III (CLASS B) OR HIGHER. REAR FACE OF ATTENUATOR DEVICE SHALL BE CLEAR OF ANY OBSTRUCTIONS AND NOT USED FOR MOUNTING OF ANY TEMPORARY SIGNING, INCLUDING REQUIRED CONSTRUCTION SIGNS

CHANNELIZING DEVICE LEGEND

- WHITE RETROREFLECTORIZED SHEETING, ASTM TYPE IX (CLASS E) OR HIGHER
- ORANGE RETROREFLECTORIZED SHEETING, ASTM TYPE IX (CLASS E) OR HIGHER
- NON-REFLECTORIZED ORANGE
- (* *) WHITE REFLECTIVE SHEETING, ASTM TYPE III (CLASS B) OR ASTM TYPE V (CLASS C)

NEW YORK STATE OF OPPORTUNITY. Thruway Authority

U.S. CUSTOMARY STANDARD SHEET

GENERAL WZTC NOTES
AND CHANNELIZING DEVICES
(DRAWING GWZN)

APPROVED MAY 1, 2019

/S/ PATRICK THOMPSON, P.E.
DIRECTOR DESIGN SUPPORT
SERVICES BUREAU

ISSUED UNDER DB 19-001

TA 619-02

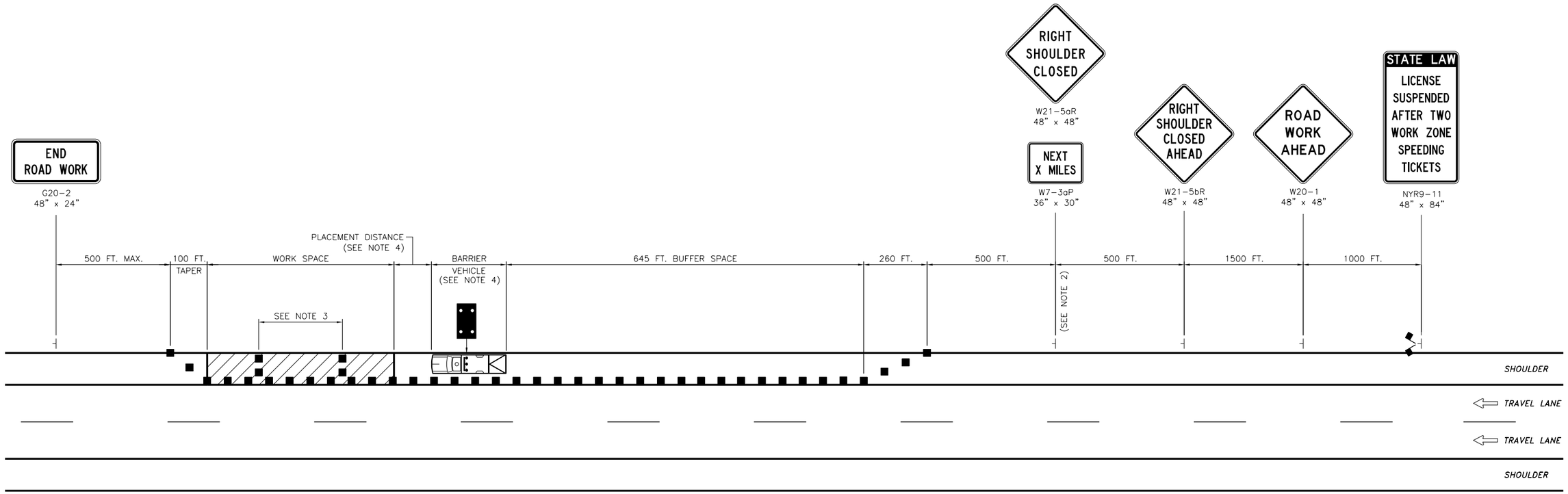

WORK ZONE TRAFFIC CONTROL PLAN

N.T.S.

NOTES:

1. THE PLAN SHOWN IS FOR A SHORT- OR INTERMEDIATE-TERM STATIONARY RIGHT SHOULDER CLOSURE. FOR A SHORT- OR INTERMEDIATE-TERM STATIONARY LEFT SHOULDER CLOSURE, SUBSTITUTE "LEFT SHOULDER CLOSED AHEAD" SIGN (W21-5bL) FOR THE "RIGHT SHOULDER CLOSED AHEAD" SIGN (W21-5bR) AND "LEFT SHOULDER CLOSED" SIGN (W21-5aL) FOR THE "RIGHT SHOULDER CLOSED" SIGN (W21-5aR). THE SHORT- OR INTERMEDIATE-TERM STATIONARY LEFT SHOULDER CLOSURE PLAN SHALL BE THE MIRROR IMAGE OF THE PLAN SHOWN.

2. THE "NEXT X MILES" SUPPLEMENTAL SIGN (W7-3aP) IS REQUIRED WHEN THE SHOULDER IS CLOSED FOR A DISTANCE GREATER THAN 2 MILES.

3. IN LONG WORK SPACES (1500 FEET AND GREATER) ON PAVED SHOULDERS HAVING A WIDTH OF 8 FEET OR GREATER, TWO DRUMS, TWO TALL CONES, OR TWO OVERSIZED VERTICAL PANELS SHALL BE PLACED TRANSVERSELY ACROSS THE CLOSED SHOULDER AT MAXIMUM INTERVALS OF 800 FEET. IN ADDITION, TWO DRUMS, TWO TALL CONES, OR TWO OVERSIZED VERTICAL PANELS SHALL BE SIMILARLY PLACED IN ADVANCE OF ANY TRANSVERSE DROP-OFF OF 1 1/2 INCHES OR GREATER.

4. THE BARRIER VEHICLE SHALL BE PROVIDED IN ACCORDANCE WITH SECTION 619 OF THE STANDARD SPECIFICATIONS. FOR BARRIER VEHICLE USE AND PLACEMENT REQUIREMENTS, SEE TABLES NY1-A AND NY2-A ON NYSTA STANDARD SHEET 619-01 - WORK ZONE TRAFFIC CONTROL TABLES AND LEGEND. THE BARRIER VEHICLE SHALL BE LOCATED COMPLETELY ON THE SHOULDER.

NEW YORK STATE OF OPPORTUNITY. | Thruway Authority

U.S. CUSTOMARY STANDARD SHEET

SHOULDER CLOSURE
SHORT OR INTERMEDIATE TERM STATIONARY
(DRAWING SC)

APPROVED SEPTEMBER 1, 2018	ISSUED UNDER EI 18-003
/S/ PATRICK THOMPSON, P.E. DIRECTOR DESIGN SUPPORT SERVICES BUREAU	**TA 619-03**

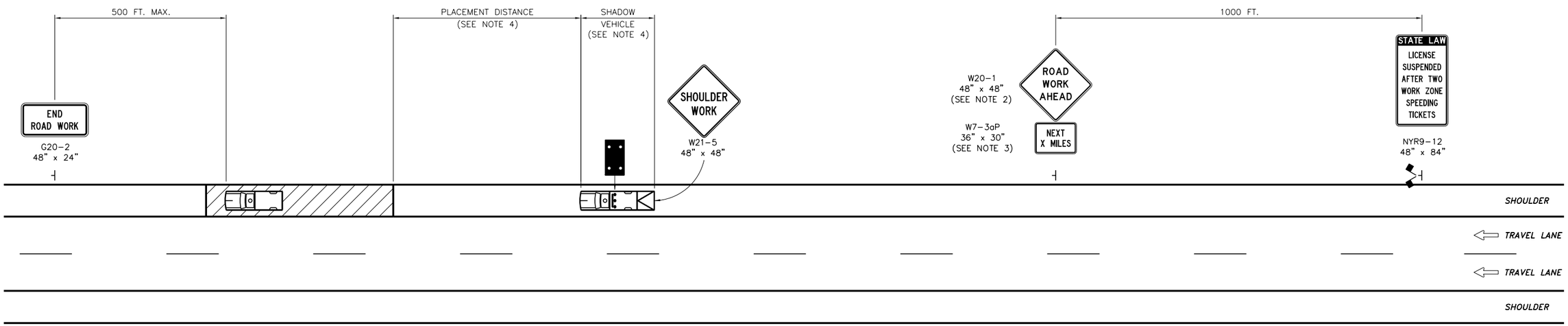

SHORT-DURATION STATIONARY OR MOBILE SHOULDER CLOSURE
(MULTIPLE WORK LOCATIONS)

N.T.S.

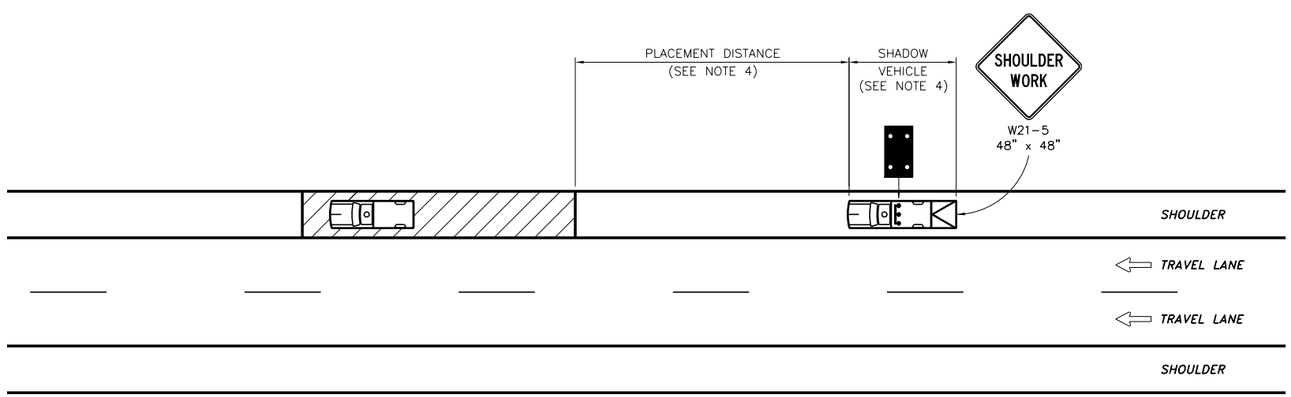

MOBILE OPERATION ON SHOULDER

N.T.S.

NOTES:

1. THE PLANS SHOWN ARE FOR SHORT-DURATION STATIONARY WORK OR MOBILE OPERATIONS ON THE RIGHT SHOULDER. THE LEFT SHOULDER PLANS SHALL BE THE MIRROR IMAGE OF THOSE SHOWN.
2. IN SITUATIONS WHERE MULTIPLE WORK LOCATIONS WITHIN A LIMITED DISTANCE MAKE IT PRACTICAL TO PLACE STATIONARY SIGNS, THE DISTANCE BETWEEN THE ADVANCE WARNING SIGN AND THE WORK SHALL NOT EXCEED 5 MILES.
3. IN SITUATIONS WHERE THE DISTANCE BETWEEN THE ADVANCE WARNING SIGNS AND THE WORK IS 2 MILES TO 5 MILES, THE "NEXT X MILES" SUPPLEMENTAL SIGN (W7-3aP) SHALL BE USED WITH THE "ROAD WORK AHEAD" SIGN (W20-1).
4. THE SHADOW VEHICLE SHALL BE PROVIDED IN ACCORDANCE WITH SECTION 619 OF THE STANDARD SPECIFICATIONS. FOR SHADOW VEHICLE USE AND PLACEMENT REQUIREMENTS, SEE TABLES NY1-B AND NY2-B ON NYSTA STANDARD SHEET 619-01 - WORK ZONE TRAFFIC CONTROL TABLES AND LEGEND. THE SHADOW VEHICLE SHALL BE LOCATED COMPLETELY ON THE SHOULDER.

NEW YORK STATE OF OPPORTUNITY. | Thruway Authority

U.S. CUSTOMARY STANDARD SHEET

SHOULDER CLOSURE
SHORT DURATION STATIONARY AND MOBILE
(DRAWING SCM)

APPROVED SEPTEMBER 1, 2018	ISSUED UNDER EI 18-003
/S/ PATRICK THOMPSON, P.E. DIRECTOR DESIGN SUPPORT SERVICES BUREAU	**TA 619-04**

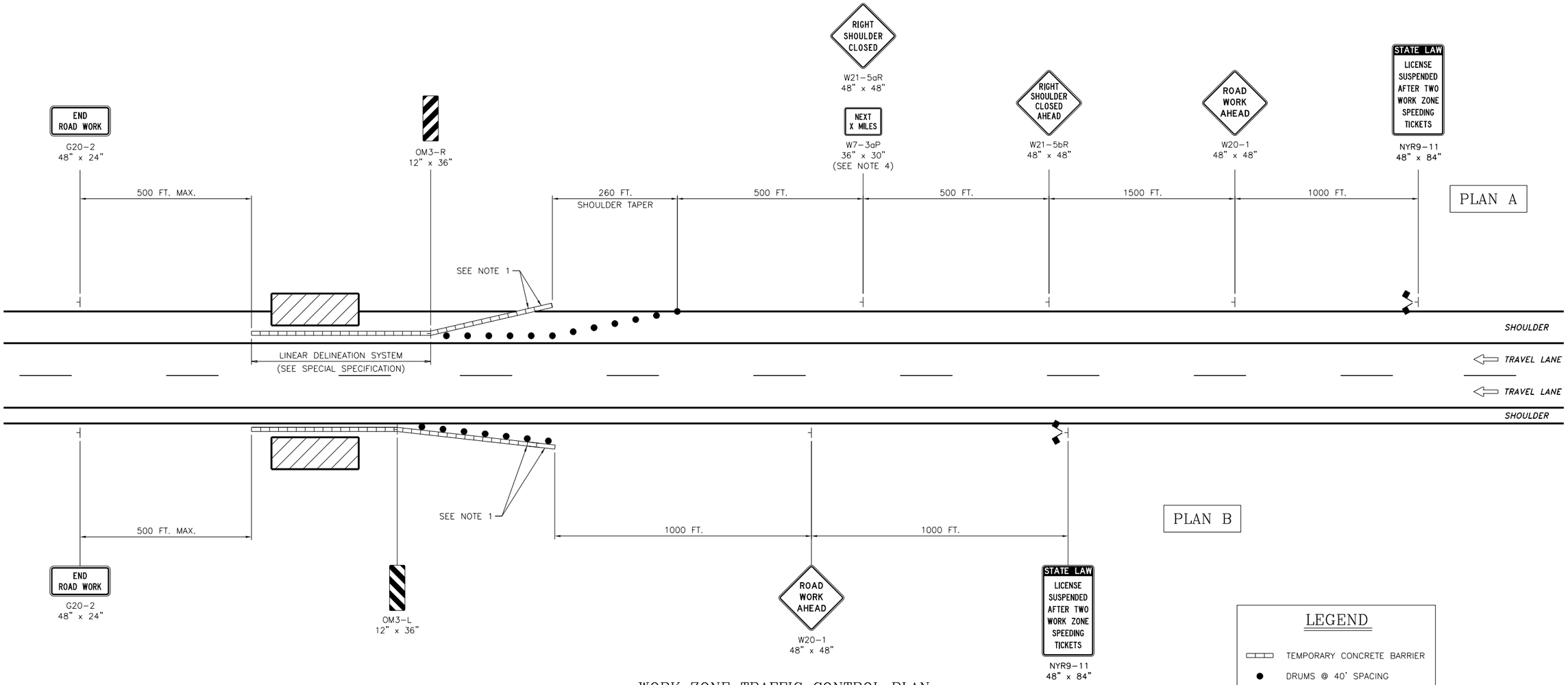

WORK ZONE TRAFFIC CONTROL PLAN

N.T.S.

LEGEND

- TEMPORARY CONCRETE BARRIER
- DRUMS @ 40' SPACING
- WORK AREA

NOTES:

1. FOR TEMPORARY CONCRETE BARRIER AND END TREATMENT DETAILS, REFER TO THE DESIGNED LAYOUT SHEET(S) IN THE CONTRACT PLANS.
2. TWO DIFFERENT SIGNING AND DELINEATION PLANS ARE SHOWN:

   PLAN A SHALL BE USED WHERE TEMPORARY CONCRETE BARRIER IS INSTALLED ON THE SHOULDER. FOR LEFT SHOULDER APPLICATIONS, SUBSTITUTE "LEFT SHOULDER CLOSED AHEAD" SIGN (W21-5bL) AND "LEFT SHOULDER CLOSED" SIGN (W21-5aL) FOR RIGHT SHOULDER CLOSED SIGNS (W21-5bR AND W21-5aR).

   PLAN B SHALL BE USED WHERE TEMPORARY CONCRETE BARRIER IS INSTALLED OFF THE SHOULDER.
3. SIGNING IS REQUIRED ONLY ON THE SIDE OF THE ROADWAY WHERE THE WORK SPACE IS LOCATED.
4. THE "NEXT X MILES" SUPPLEMENTAL SIGN (W7-3aP) IS REQUIRED WHEN THE SHOULDER IS CLOSED FOR A DISTANCE GREATER THAN 2 MILES.

NEW YORK STATE OF OPPORTUNITY. | Thruway Authority

U.S. CUSTOMARY STANDARD SHEET

SIGNING AND DELINEATION FOR SHOULDER WORK SPACES WITH TEMPORARY CONCRETE BARRIER (DRAWING SCSD)

APPROVED MAY 1, 2019	ISSUED UNDER DB 19-001
/S/ PATRICK THOMPSON, P.E. DIRECTOR DESIGN SUPPORT SERVICES BUREAU	**TA 619-05**

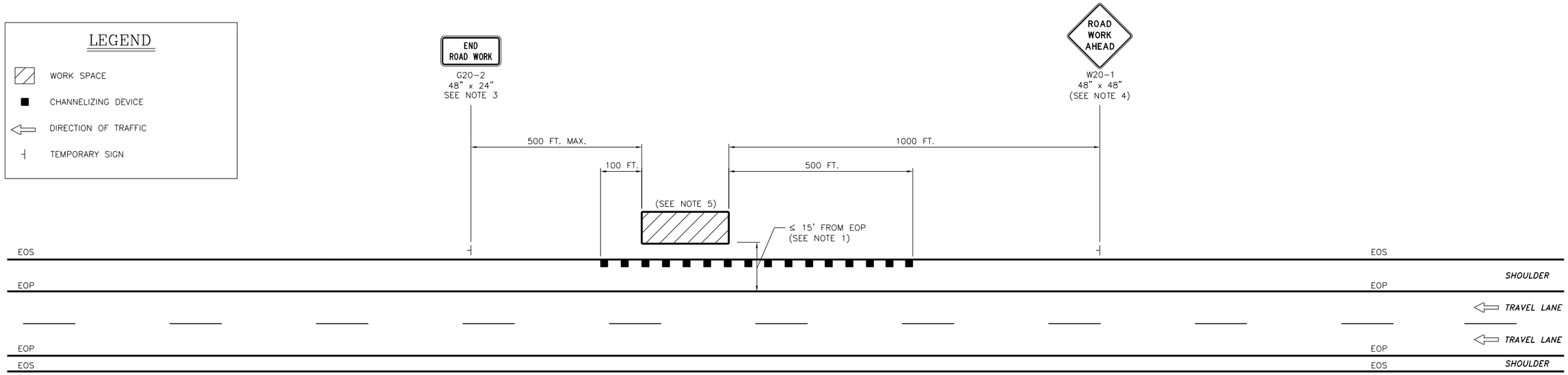

OPTION A
WORK BEYOND SHOULDER
N.T.S.

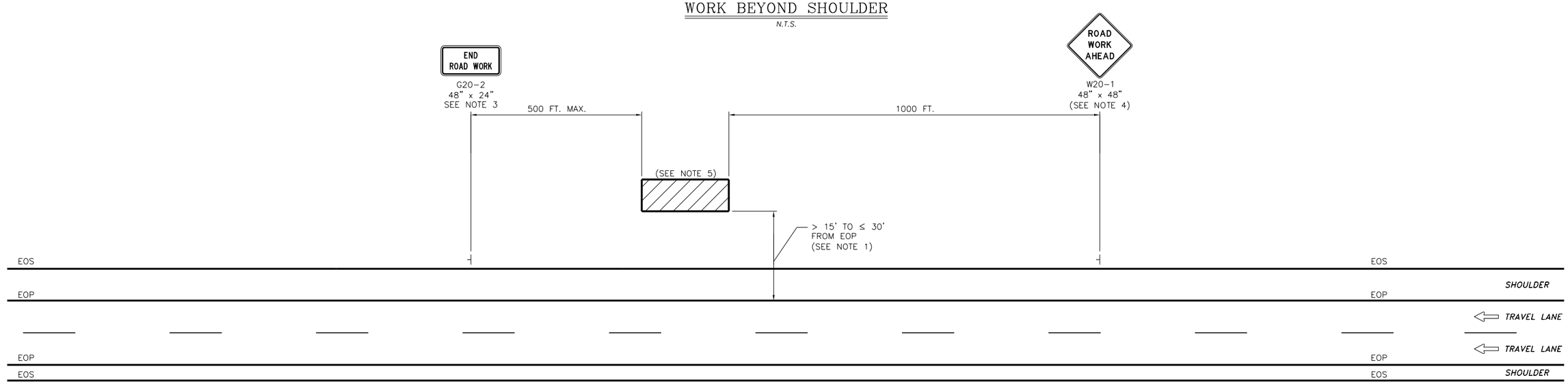

OPTION B
WORK BEYOND SHOULDER
N.T.S.

NOTES:

1. THE PLAN SHOWN IS FOR STATIONARY WORK BEING PERFORMED OFF THE ROADWAY (BEYOND THE SHOULDER, BUT WITHIN THE R.O.W.). NO TRAFFIC CONTROL IS REQUIRED WHERE THE WORK SPACE IS BEHIND A BARRIER OR CONFINED TO AN AREA MORE THAN 30' FROM THE EDGE OF TRAVEL WAY.
2. WHEN THE WORK SPACE IS IN THE MEDIAN AND AN ADVANCE "ROAD WORK AHEAD" SIGN IS REQUIRED, THE SIGN SHALL BE PLACED ON THE LEFT SIDE OF THE DIRECTIONAL ROADWAY.
3. THE "END ROAD WORK" SIGN IS OPTIONAL IF THE WORK DURATION IS TWO HOURS OR LESS.
4. A "SHOULDER WORK" W21-5 (48" x 48") MAY BE SUBSTITUTED FOR THE "ROAD WORK AHEAD" SIGN.
5. DURING NON-WORKING HOURS, ALL EQUIPMENT AND MATERIALS SHALL BE STORED AT LEAST THIRTY (30) FEET FROM THE EDGE OF PAVEMENT (BOTH MAINLINE AND RAMPS) OR BE PROTECTED BY A PHYSICAL BARRIER AS APPROVED BY THE ENGINEER.

NEW YORK STATE OF OPPORTUNITY. Thruway Authority

U.S. CUSTOMARY STANDARD SHEET

WORK BEYOND SHOULDER (DRAWING WBS)

APPROVED NOVEMBER 1, 2018	ISSUED UNDER DB 18-005
/S/ PATRICK THOMPSON, P.E. DIRECTOR DESIGN SUPPORT SERVICES BUREAU	**TA 619-06**

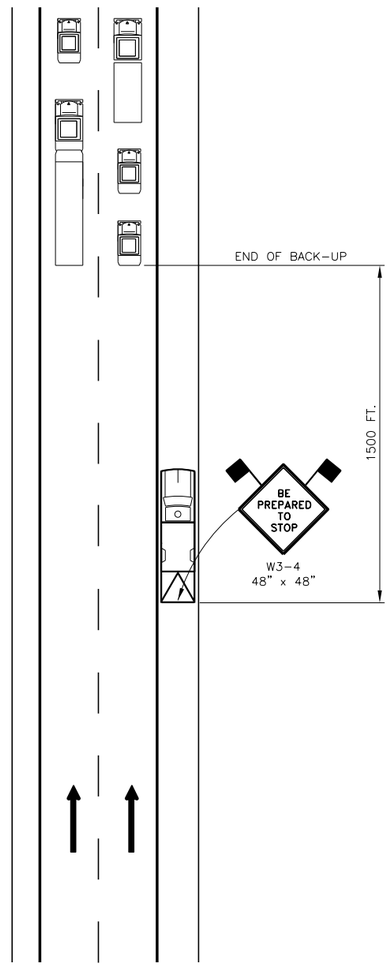

TWO-LANE SECTION

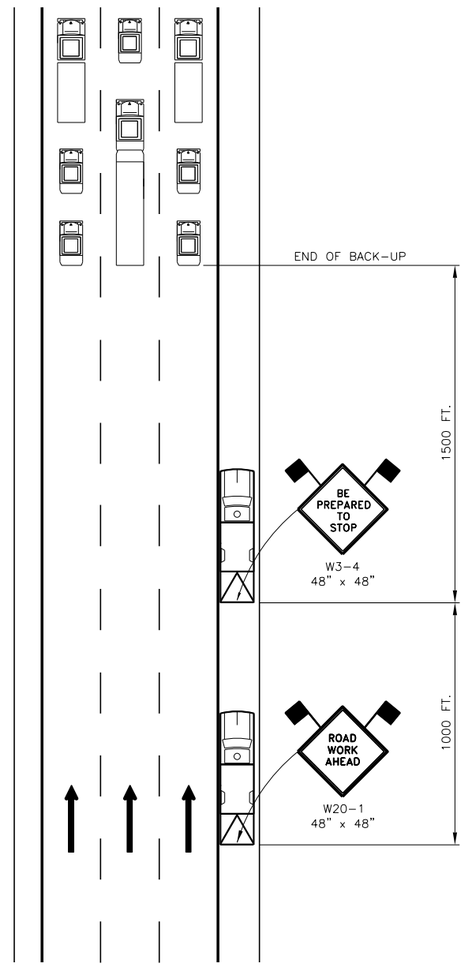

THREE-LANE SECTION

BE PREPARED TO STOP SIGNING

N.T.S.

NOTES:

1. THE "BE PREPARED TO STOP" SIGN (W3-4) SHALL BE USED, WHERE CONDITIONS PERMIT, TO INFORM ONCOMING TRAFFIC OF A STOPPED OR VERY SLOW TRAFFIC CONDITION CAUSED BY STATIONARY CONSTRUCTION WORK ZONES. THE SIGN SHALL BE POSTED APPROXIMATELY 1500 FEET UPSTREAM OF THE END OF THE BACK-UP. WHEN THE END OF THE BACK-UP MOVES, THE SIGN SHALL ALSO BE MOVED TO MAINTAIN THAT SPACING.
2. IN SECTIONS WITH THREE OR MORE LANES, IF THE RESULTING LOCATION PLACES THE SIGN UPSTREAM OF THE FIRST WARNING SIGN FOR THE PROJECT, A "ROAD WORK AHEAD" SIGN (W20-1) SHALL BE PLACED APPROXIMATELY 1000 FEET IN ADVANCE OF THE "BE PREPARED TO STOP" SIGN.
3. A BACK-UP SHALL BE DEFINED AS A LINE OF STOPPED OR SLOWLY MOVING VEHICLES (25 MPH OR LESS) EXTENDING FROM THE BEGINNING OF THE TAPER TO THE FIRST WARNING SIGN OF THE WORK ZONE AND INVOLVING A DELAY OF AT LEAST 10 MINUTES.
4. THE "BE PREPARED TO STOP" SIGN IS NOT REQUIRED WHEN TRAFFIC BACK-UPS ARE CREATED UNDER NORMAL OPERATING CONDITIONS OUTSIDE THE LIMITS OF A WORK ZONE.
5. A TRUCK MOUNTED VMS DISPLAYING THE MESSAGE "BE PREPARED TO STOP" MAY BE USED IN LIEU OF THE STATIC SIGN (W3-4). COST SHALL BE INCLUDED UNDER ITEM 619.01.

LEGEND

	WORK VEHICLE (ATTENUATOR OPTIONAL)
	WARNING FLAGS MINIMUM 18 x 18 IN.

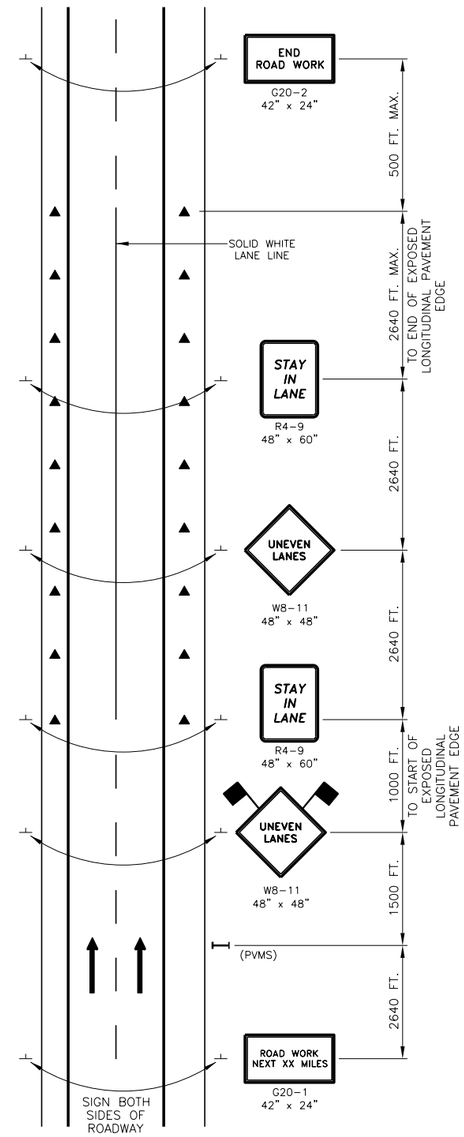

UNEVEN LANES SIGNING

N.T.S.

GENERAL:

THE UNEVEN LANES SIGNING PLAN SHALL BE USED IN AREAS WHERE THERE IS A LONGITUDINAL PAVEMENT JOINT CONDITION, RESULTING IN AN EXPOSED VERTICAL FACE BETWEEN TRAVEL LANES OF 1/2 INCH TO 1 INCH IN HEIGHT, THAT IS EXPOSED TO TRAFFIC DURING NON-WORKING HOURS.

NOTES:

1. THIS PLAN APPLIES TO TWO-, THREE-, FOUR-, AND FIVE-LANE SECTIONS.
2. THE PLAN SHOWN IS FOR AREAS WHERE THE USABLE LEFT SHOULDER/MEDIAN WIDTH IS AT LEAST 6 FEET. IN AREAS WHERE THE USABLE LEFT SHOULDER/MEDIAN WIDTH IS LESS THAN 6 FEET, LEFT SIDE SIGNS SHALL BE MOUNTED ON THE MEDIAN BARRIER. IF THE TOTAL MEDIAN WIDTH IS LESS THAN 6 FEET, LEFT SIDE SIGNS SHALL NOT BE REQUIRED.
3. THE "UNEVEN LANES" (W8-11) SIGN SHALL BE BLACK ON FLUORESCENT ORANGE.
4. THE PORTABLE VARIABLE MESSAGE SIGN (PVMS) SHALL SHALL DISPLAY THE TWO-PART MESSAGE: "UNEVEN LANES AHEAD / MCYCLES USE CAUTION."
5. "UNEVEN LANES" (W8-11) SIGNS SHALL BE ALTERNATAED WITH "STAY IN LANE" SIGNS FOR THE ENTIRE LENGTH OF THE EXPOSED LONGITUDINAL PAVEMENT EDGE CONDITION AT A SPACING NOT TO EXCEED 1/2 MILE. ADDITIONAL "UNEVEN LANES" (W8-11) SIGN(S) SHALL BE REQUIRED JUST BEYOND ANY ENTRANCE RAMP THAT TERMINATES WITHIN THE WORK ZONE SIGNING.
6. WHEN THE EXPOSED LONGITUDINAL JOINT CONDITION NO LONGER EXISTS, THE "UNEVEN LANES" (W8-11) SIGNS AND "STAY IN LANE" (R4-9) SIGNS SHALL BE REMOVED OR COVERED AND THE PVMS SHALL BE DE-ACTIVATED OR PROGRAMMED TO DISPLAY ANOTHER APPROVED MESSAGE.
7. THE EXPOSED LONGITUDINAL PAVEMENT JOINT CONDITION SHALL NOT BE ALLOWED OVER WEEKENDS, HOLIDAYS OR WHEN THERE ARE OTHER CONCERNS, SUCH AS PENDING WET WEATHER.

PAVEMENT MARKING NOTES:

1. WHITE BROKEN LANE LINES SHALL BE REPLACED WITH SOLID WHITE LINES FOR THE ENTIRE LENGTH OF THE EXPOSED LONGITUDINAL PAVEMENT EDGE CONDITION.
2. WHEN EDGE LINE PAVEMENT MARKINGS (SOLID LINES) ARE REMOVED AND NOT REPLACED AT THE END OF THE WORK SHIFT, TRAFFIC CONES, OR OTHER APPROVED CHANNELIZING DEVICE, SHALL BE USED TO DELINEATE THE PAVEMENT EDGE.

LEGEND

	WARNING FLAGS MINIMUM 18 x 18 IN.
	TEMPORARY SIGN
	PORTABLE VARIABLE MESSAGE SIGN (PVMS)
	TRAFFIC CONES @ 120 FT. SPACING

NEW YORK STATE OF OPPORTUNITY. Thruway Authority

U.S. CUSTOMARY STANDARD SHEET

BE PREPARED TO STOP
AND
UNEVEN LANES

APPROVED MAY 1, 2019

/S/ PATRICK THOMPSON, P.E.
DIRECTOR DESIGN SUPPORT SERVICES BUREAU

ISSUED UNDER DB 19-001

TA 619-07

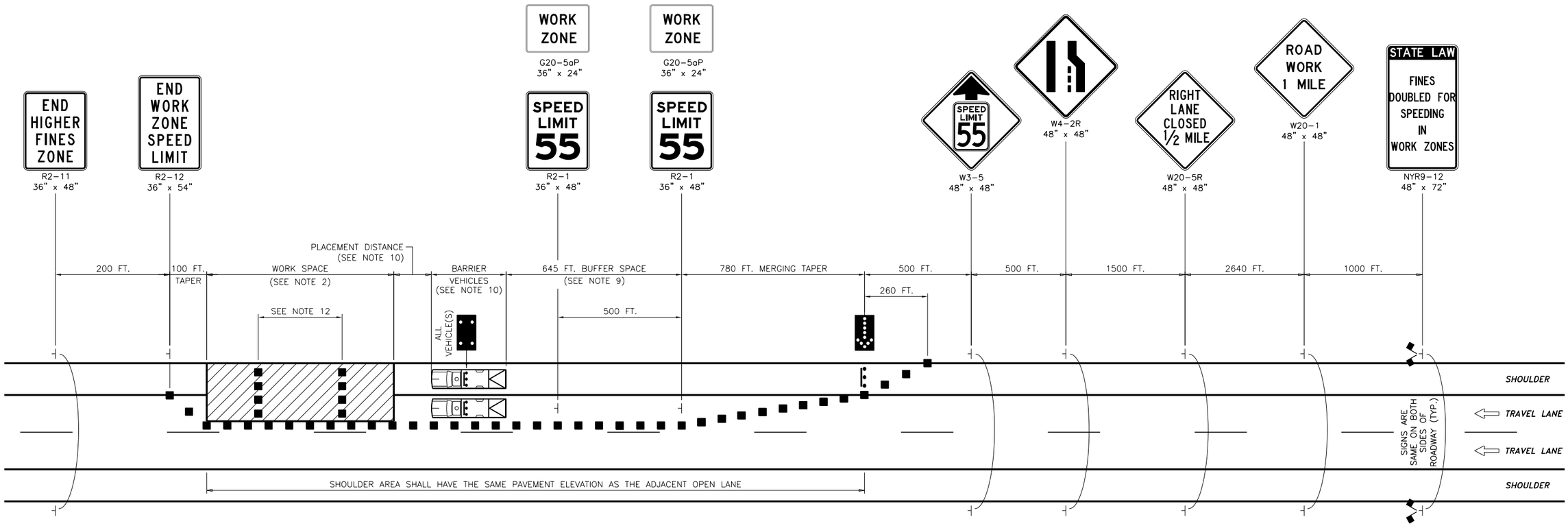

WORK ZONE TRAFFIC CONTROL PLAN

N.T.S.

NOTES:

1. THIS PLAN APPLIES TO TWO-, THREE-, FOUR-, AND FIVE-LANE SECTIONS.

2. THE MAXIMUM LENGTH OF ANY CONTINUOUS WORK SPACE SHALL NOT EXCEED 3 MILES (2 MILES FOR MILLING AND PAVING OPERATIONS). ALL TRAFFIC SHALL BE RE-ESTABLISHED TO ITS NORMAL LANE CONFIGURATION FOR A MINIMUM 2 MILES PRIOR TO A SUCCESSIVE LANE CLOSURE. (THE SEPARATION BETWEEN SUCCESSIVE LANE CLOSURES IS MEASURED FROM THE LAST SIGN OF THE FIRST LANE CLOSURE TO THE BEGINNING OF THE MERGING TAPER OF THE SECOND LANE CLOSURE).

3. THE PLAN SHOWN IS FOR A STATIONARY RIGHT LANE CLOSURE. FOR A STATIONARY LEFT LANE CLOSURE, SUBSTITUTE "LEFT LANE CLOSED 1/2 MILE" SIGN (W20-5L) FOR THE "RIGHT LANE CLOSED 1/2 MILE" SIGN (W20-5R) AND LEFT LANE ENDS SYMBOL SIGN (W4-2L) FOR THE RIGHT LANE ENDS SYMBOL SIGN (W4-2R). THE STATIONARY LEFT LANE CLOSURE PLAN SHALL BE THE MIRROR IMAGE OF THE PLAN SHOWN WITH THE EXCEPTION THAT THE "WORK ZONE/SPEED LIMIT 55" SIGNS (G20-5aP/R2-1) SHALL BE INSTALLED ON THE RIGHT SIDE OF THE ROADWAY.

4. FOR A STATIONARY LANE CLOSURE IN AN AREA WHERE THE USABLE LEFT SHOULDER/MEDIAN WIDTH IS LESS THAN 6 FEET, LEFT SIDE SIGNS SHALL BE MOUNTED ON THE MEDIAN BARRIER. IF THE TOTAL MEDIAN WIDTH IS LESS THAN 6 FEET, LEFT SIDE SIGNS SHALL NOT BE REQUIRED.

5. ON ROADWAY SECTIONS WHERE THE USABLE SHOULDER IS LESS THAN 8 FEET, A MOBILE LANE CLOSURE PLAN SHALL BE USED TO INSTALL AND REMOVE TEMPORARY TRAFFIC CONTROL DEVICES. THE SAME SHALL ALSO APPLY WHEN COVERING AND UNCOVERING PREVIOUSLY INSTALLED SIGNS.

6. WHEN TRAFFIC IS REDUCED TO A SINGLE LANE, THE "WORK ZONE/SPEED LIMIT 55" SIGNS (G20-5aP/R2-1) SHALL BE INSTALLED ON THE RIGHT SIDE OF THE ROADWAY ONLY. IF MULTIPLE LANES ARE OPEN TO TRAFFIC, THE SIGNS SHALL BE INSTALLED ON BOTH SIDES OF THE ROADWAY.

7. WHEN THE DISTANCE BETWEEN THE SECOND "WORK ZONE/SPEED LIMIT 55" SIGN (G20-5aP/R2-1) AND THE END OF THE WORK SPACE EXCEEDS 1/2 MILE, ADDITIONAL "WORK ZONE/SPEED LIMIT 55" SIGN(S) (G20-5aP/R2-1) SHALL BE INSTALLED ON THE RIGHT SIDE OF THE OPEN TRAVEL LANE, OR BOTH SIDES OF MULTIPLE OPEN TRAVEL LANES, TO MAINTAIN A MAXIMUM SPACING OF 1/2 MILE.

8. IN ADDITION TO THE SIGNING SHOWN, "ROAD WORK AHEAD" (W20-1) AND "WORK ZONE/SPEED LIMIT 55" (G20-5aP/R2-1) SIGNS SHALL BE PLACED ALONG ANY ENTRANCE RAMP THAT TERMINATES WITHIN THE WORK ZONE TRAFFIC CONTROL LIMITS. THE LOCATION OF THESE SIGNS SHALL BE DETERMINED BY THE ENGINEER.

9. THE LENGTH OF THE BUFFER SPACE SHALL BE EXTENDED, AS ORDERED BY THE ENGINEER, TO ENSURE ADEQUATE SIGHT DISTANCE FOR VEHICLES APPROACHING THE LANE CLOSURE TAPER. IN CASES WHERE RESTRICTIVE FEATURES ARE PRESENT, A REDUCTION IN THE BUFFER SPACE LENGTH MAY BE PERMITTED WITH THE APPROVAL OF THE ENGINEER.

10. BARRIER VEHICLES SHALL BE PROVIDED IN ACCORDANCE WITH SECTION 619 OF THE STANDARD SPECIFICATIONS. FOR BARRIER VEHICLE USE AND PLACEMENT REQUIREMENTS, SEE TABLES NY1-A AND NY2-A ON NYSTA STANDARD SHEET 619-01 - WORK ZONE TRAFFIC CONTROL TABLES AND LEGEND.

11. EXISTING PAVEMENT MARKINGS SHALL BE MAINTAINED BY THE CONTRACTOR WITHIN THE WORK ZONE TRAFFIC CONTROL LIMITS.

12. IN LONG WORK SPACES (1500 FEET AND GREATER), TWO DRUMS, TWO TALL CONES, OR TWO OVERSIZED VERTICAL PANELS SHALL BE PLACED TRANSVERSELY ACROSS EACH CLOSED LANE (AND SHOULDER IF WIDTH IS 8 FEET OR GREATER) AT MAXIMUM INTERVALS OF 800 FEET. IN ADDITION, TWO DRUMS, TWO TALL CONES, OR TWO OVERSIZED VERTICAL PANELS SHALL BE SIMILARLY PLACED IN ADVANCE OF ANY TRANSVERSE DROP-OFF OF 1 1/2 INCHES OR GREATER.

NEW YORK STATE OF OPPORTUNITY. | Thruway Authority

U.S. CUSTOMARY STANDARD SHEET

SINGLE LANE CLOSURE
SHORT TERM OR INTERMEDIATE TERM
STATIONARY - 65 MPH ZONE
(DRAWING SLC-65)

APPROVED MAY 1, 2019	ISSUED UNDER DB 19-001
/S/ PATRICK THOMPSON, P.E. DIRECTOR DESIGN SUPPORT SERVICES BUREAU	**TA 619-08**

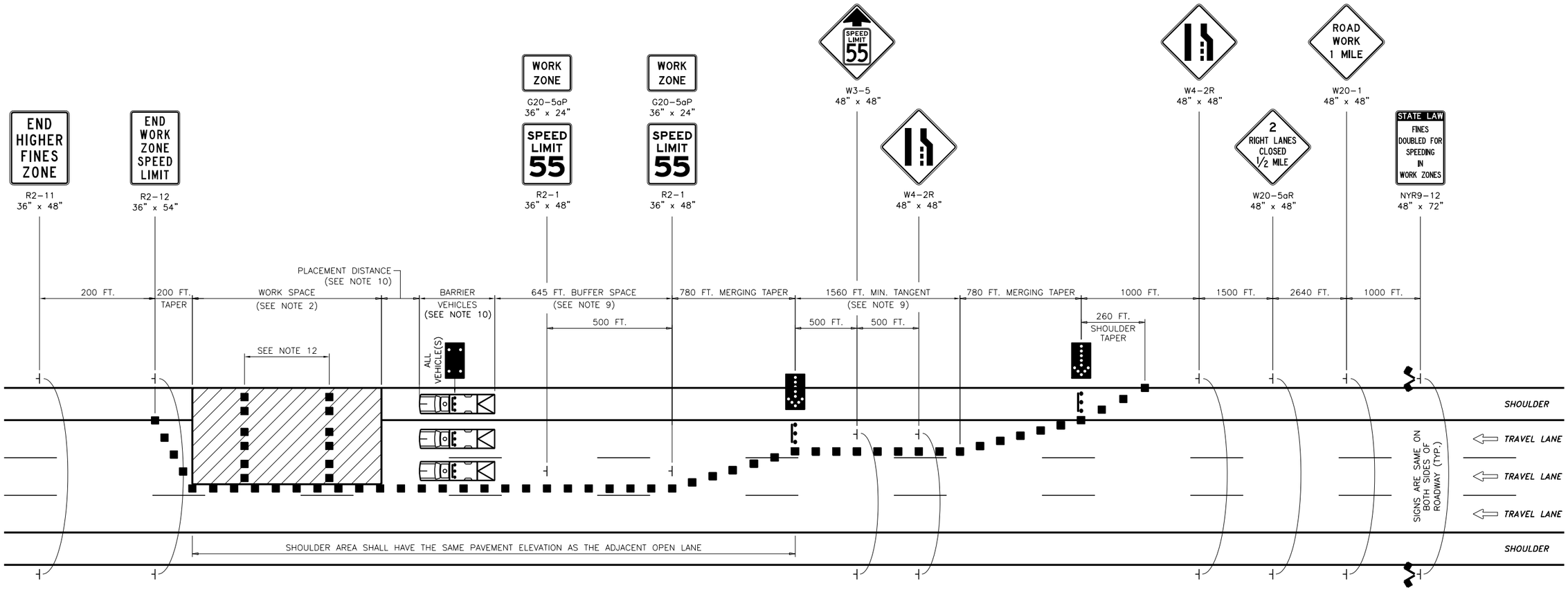

WORK ZONE TRAFFIC CONTROL PLAN

N.T.S.

NOTES:

1. THIS PLAN APPLIES TO THREE-, FOUR-, AND FIVE-LANE SECTIONS.

2. THE MAXIMUM LENGTH OF ANY CONTINUOUS WORK SPACE SHALL NOT EXCEED 3 MILES (2 MILES FOR MILLING AND PAVING OPERATIONS). ALL TRAFFIC SHALL BE RE-ESTABLISHED TO ITS NORMAL LANE CONFIGURATION FOR A MINIMUM 2 MILES PRIOR TO A SUCCESSIVE LANE CLOSURE. (THE SEPARATION BETWEEN SUCCESSIVE LANE CLOSURES IS MEASURED FROM THE LAST SIGN OF THE FIRST LANE CLOSURE TO THE BEGINNING OF THE MERGING TAPER OF THE SECOND LANE CLOSURE).

3. THE PLAN SHOWN IS FOR A STATIONARY RIGHT DOUBLE LANE CLOSURE. FOR A STATIONARY LEFT DOUBLE LANE CLOSURE, SUBSTITUTE "LEFT TWO LANES CLOSED 1/2 MILE" SIGN (W20-5aL) FOR THE "RIGHT TWO LANES CLOSED 1/2 MILE" SIGN (W20-5aR) AND LEFT LANE ENDS SYMBOL SIGN (W4-2L) FOR THE RIGHT LANE ENDS SYMBOL SIGN (W4-2R). THE STATIONARY LEFT DOUBLE LANE CLOSURE PLAN SHALL BE THE MIRROR IMAGE OF THE PLAN SHOWN WITH THE EXCEPTION THAT THE "WORK ZONE/SPEED LIMIT 55" SIGNS (G20-5aP/R2-1) SHALL BE INSTALLED ON THE RIGHT SIDE OF THE ROADWAY.

4. FOR A STATIONARY DOUBLE LANE CLOSURE IN AN AREA WHERE THE USABLE LEFT SHOULDER/MEDIAN WIDTH IS LESS THAN 6 FEET, LEFT SIDE SIGNS SHALL BE MOUNTED ON THE MEDIAN BARRIER. IF THE TOTAL MEDIAN WIDTH IS LESS THAN 6 FEET, LEFT SIDE SIGNS SHALL NOT BE REQUIRED.

5. ON ROADWAY SECTIONS WHERE THE USABLE SHOULDER IS LESS THAN 8 FEET, A MOBILE LANE CLOSURE PLAN SHALL BE USED TO INSTALL AND REMOVE TEMPORARY TRAFFIC CONTROL DEVICES. THE SAME SHALL ALSO APPLY WHEN COVERING AND UNCOVERING PREVIOUSLY INSTALLED SIGNS.

6. WHEN TRAFFIC IS REDUCED TO A SINGLE LANE, THE "WORK ZONE/SPEED LIMIT 55" SIGNS (G20-5aP/R2-1) SHALL BE INSTALLED ON THE RIGHT SIDE OF THE ROADWAY ONLY. IF MULTIPLE LANES ARE OPEN TO TRAFFIC, THE SIGNS SHALL BE INSTALLED ON BOTH SIDES OF THE ROADWAY.

7. WHEN THE DISTANCE BETWEEN THE SECOND "WORK ZONE/SPEED LIMIT 55" SIGN (G20-5aP/R2-1) AND THE END OF THE WORK SPACE EXCEEDS 1/2 MILE, ADDITIONAL "WORK ZONE/SPEED LIMIT 55" SIGN(S) (G20-5aP/R2-1) SHALL BE INSTALLED ON THE RIGHT SIDE OF THE OPEN TRAVEL LANE, OR BOTH SIDES OF MULTIPLE OPEN TRAVEL LANES, TO MAINTAIN A MAXIMUM SPACING OF 1/2 MILE.

8. IN ADDITION TO THE SIGNING SHOWN, "ROAD WORK AHEAD" (W20-1) AND "WORK ZONE/SPEED LIMIT 55" (G20-5aP/R2-1) SIGNS SHALL BE PLACED ALONG ANY ENTRANCE RAMP THAT TERMINATES WITHIN THE WORK ZONE TRAFFIC CONTROL LIMITS. THE LOCATION OF THESE SIGNS SHALL BE DETERMINED BY THE ENGINEER.

9. THE LENGTH OF THE TANGENT AND/OR BUFFER SPACE SHALL BE EXTENDED, AS ORDERED BY THE ENGINEER, TO ENSURE ADEQUATE SIGHT DISTANCE FOR VEHICLES APPROACHING THE LANE CLOSURE TAPER(S). IN CASES WHERE RESTRICTIVE FEATURES ARE PRESENT, A REDUCTION IN THE TANGENT AND/OR BUFFER SPACE LENGTH MAY BE PERMITTED WITH THE APPROVAL OF THE ENGINEER.

10. BARRIER VEHICLES SHALL BE PROVIDED IN ACCORDANCE WITH SECTION 619 OF THE STANDARD SPECIFICATIONS. FOR BARRIER VEHICLE USE AND PLACEMENT REQUIREMENTS, SEE TABLES NY1-A AND NY2-A ON NYSTA STANDARD SHEET 619-01 - WORK ZONE TRAFFIC CONTROL TABLES AND LEGEND.

11. EXISTING PAVEMENT MARKINGS SHALL BE MAINTAINED BY THE CONTRACTOR WITHIN THE WORK ZONE TRAFFIC CONTROL LIMITS.

12. IN LONG WORK SPACES (1500 FEET AND GREATER), TWO DRUMS, TWO TALL CONES, OR TWO OVERSIZED VERTICAL PANELS SHALL BE PLACED TRANSVERSELY ACROSS EACH CLOSED LANE (AND SHOULDER IF WIDTH IS 8 FEET OR GREATER) AT MAXIMUM INTERVALS OF 800 FEET. IN ADDITION, TWO DRUMS, TWO TALL CONES, OR TWO OVERSIZED VERTICAL PANELS SHALL BE SIMILARLY PLACED IN ADVANCE OF ANY TRANSVERSE DROP-OFF OF 1 1/2 INCHES OR GREATER.

NEW YORK STATE OF OPPORTUNITY. | Thruway Authority

U.S. CUSTOMARY STANDARD SHEET

DOUBLE LANE CLOSURE
SHORT OR INTERMEDIATE TERM
STATIONARY - 65 MPH ZONE
(DRAWING DLC-65)

APPROVED MAY 1, 2019

/S/ PATRICK THOMPSON, P.E.
DIRECTOR DESIGN SUPPORT SERVICES BUREAU

ISSUED UNDER DB 19-001

TA 619-09

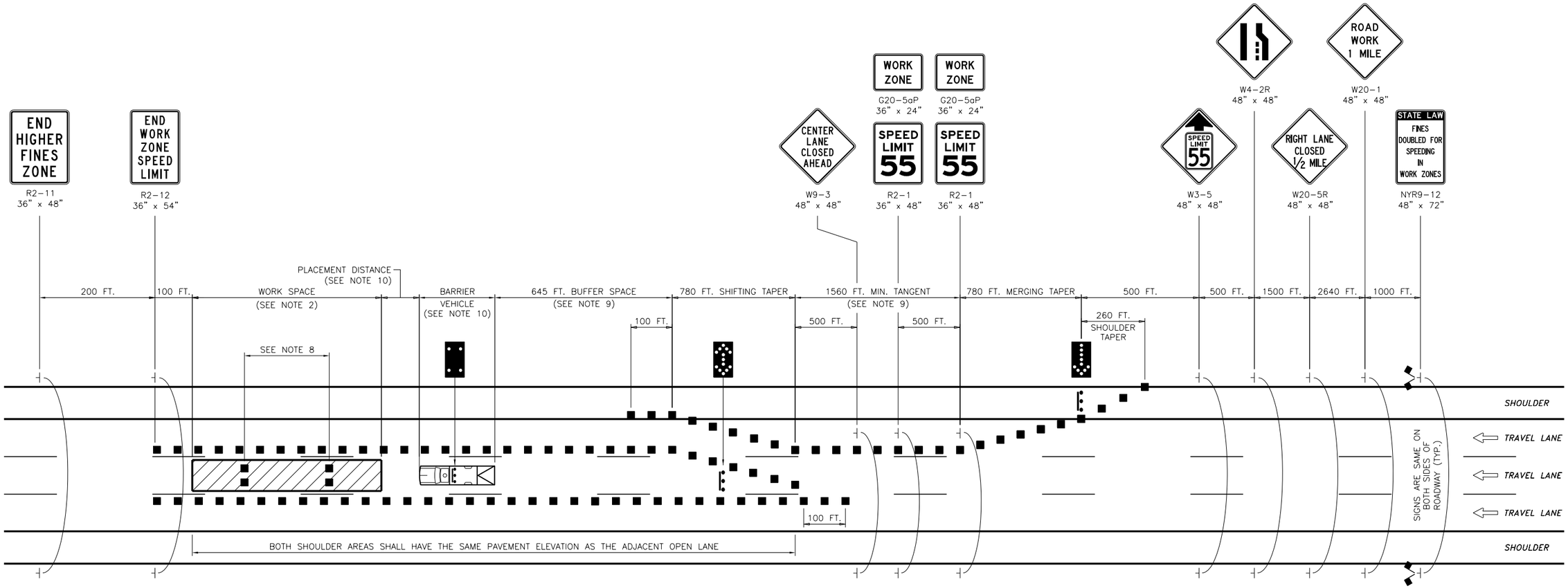

WORK ZONE TRAFFIC CONTROL PLAN

N.T.S.

NOTES:

1. THIS PLAN SHALL NOT BE USED WITHOUT FIRST CONSULTING THE DIVISION DIRECTOR OR HIS/HER DESIGNEE.

2. THE MAXIMUM LENGTH OF ANY CONTINUOUS WORK SPACE SHALL NOT EXCEED 3 MILES (2 MILES FOR MILLING AND PAVING OPERATIONS). ALL TRAFFIC SHALL BE RE-ESTABLISHED TO ITS NORMAL LANE CONFIGURATION FOR A MINIMUM 2 MILES PRIOR TO A SUCCESSIVE LANE CLOSURE. (THE SEPARATION BETWEEN SUCCESSIVE LANE CLOSURES IS MEASURED FROM THE LAST SIGN OF THE FIRST LANE CLOSURE TO THE BEGINNING OF THE MERGING TAPER OF THE SECOND LANE CLOSURE).

3. THE PLAN SHOWN IS FOR A STATIONARY CENTER LANE CLOSURE USING A RIGHT LANE DIVERSION. FOR A STATIONARY CENTER LANE CLOSURE USING A LEFT LANE DIVERSION, SUBSTITUTE "LEFT LANE CLOSED 1/2 MILE" SIGN (W20-5L) FOR THE "RIGHT LANE CLOSED 1/2 MILE" SIGN (W20-5R) AND LEFT LANE ENDS SYMBOL SIGN (W4-2L) FOR THE RIGHT LANE ENDS SYMBOL SIGN (W4-2R). THE PLAN FOR A STATIONARY CENTER LANE CLOSURE USING A LEFT LANE DIVERSION SHALL BE THE MIRROR IMAGE OF THE PLAN SHOWN.

4. FOR A STATIONARY CENTER LANE CLOSURE IN AN AREA WHERE THE USABLE LEFT SHOULDER/MEDIAN WIDTH IS LESS THAN 6 FEET, LEFT SIDE SIGNS SHALL BE MOUNTED ON THE MEDIAN BARRIER. IF THE TOTAL MEDIAN WIDTH IN A RIGHT LANE DIVERSION PLAN IS LESS THAN 6 FEET, LEFT SIDE SIGNS SHALL NOT BE REQUIRED. IF THE TOTAL MEDIAN WIDTH IN A LEFT LANE DIVERSION PLAN IS LESS THAN 6 FEET, LEFT SIDE SIGNS IN ADVANCE OF THE SHOULDER TAPER AND BEYOND THE WORK SPACE SHALL NOT BE REQUIRED.

5. ON ROADWAY SECTIONS WHERE THE USABLE SHOULDER IS LESS THAN 8 FEET, A MOBILE LANE CLOSURE PLAN SHALL BE USED TO INSTALL AND REMOVE TEMPORARY TRAFFIC CONTROL DEVICES. THE SAME SHALL ALSO APPLY WHEN COVERING AND UNCOVERING PREVIOUSLY INSTALLED SIGNS.

6. WHEN TRAFFIC IS REDUCED TO TWO LANES, THE "WORK ZONE/SPEED LIMIT 55" SIGNS (G20-5aP/R2-1) SHALL BE INSTALLED ON BOTH SIDES OF THE ROADWAY. WHEN THE DISTANCE BETWEEN THE SECOND "WORK ZONE/SPEED LIMIT 55" SIGN (G20-5aP/R2-1) AND THE END OF THE WORK SPACE EXCEEDS 1/2 MILE, ADDITIONAL "WORK ZONE/SPEED LIMIT 55" SIGN(S) (G20-5aP/R2-1) SHALL BE INSTALLED ON THE RIGHT SIDE OF EACH OPEN LANE TO MAINTAIN A MAXIMUM SPACING OF 1/2 MILE.

7. IN ADDITION TO THE SIGNING SHOWN, "ROAD WORK AHEAD" (W20-1) AND "WORK ZONE/SPEED LIMIT 55" (G20-5aP/R2-1) SIGNS SHALL BE PLACED ALONG ANY ENTRANCE RAMP THAT TERMINATES WITHIN THE WORK ZONE TRAFFIC CONTROL LIMITS. THE LOCATION OF THESE SIGNS SHALL BE DETERMINED BY THE ENGINEER.

8. IN LONG WORK SPACES (1500 FEET AND GREATER), TWO DRUMS, TWO TALL CONES, OR TWO OVERSIZED VERTICAL PANELS SHALL BE PLACED TRANSVERSELY ACROSS EACH CLOSED LANE (AND SHOULDER IF WIDTH IS 8 FEET OR GREATER) AT MAXIMUM INTERVALS OF 800 FEET. IN ADDITION, TWO DRUMS, TWO TALL CONES, OR TWO OVERSIZED VERTICAL PANELS SHALL BE SIMILARLY PLACED IN ADVANCE OF ANY TRANSVERSE DROP-OFF OF 1 1/2 INCHES OR GREATER.

9. THE LENGTH OF THE TANGENT AND/OR BUFFER SPACE SHALL BE EXTENDED, AS ORDERED BY THE ENGINEER, TO ENSURE ADEQUATE SIGHT DISTANCE FOR VEHICLES APPROACHING THE LANE CLOSURE TAPER AND/OR SHIFTING TAPER. IN CASES WHERE RESTRICTIVE FEATURES ARE PRESENT, A REDUCTION IN THE TANGENT AND/OR BUFFER SPACE LENGTH MAY BE PERMITTED WITH THE APPROVAL OF THE ENGINEER.

10. BARRIER VEHICLES SHALL BE PROVIDED IN ACCORDANCE WITH SECTION 619 OF THE STANDARD SPECIFICATIONS. FOR BARRIER VEHICLE USE AND PLACEMENT REQUIREMENTS, SEE TABLES NY1-A AND NY2-A ON NYSTA STANDARD SHEET 619-01 – WORK ZONE TRAFFIC CONTROL TABLES AND LEGEND.

11. EXISTING PAVEMENT MARKINGS SHALL BE MAINTAINED BY THE CONTRACTOR WITHIN THE WORK ZONE TRAFFIC CONTROL LIMITS.

NEW YORK STATE OF OPPORTUNITY. | Thruway Authority

U.S. CUSTOMARY STANDARD SHEET

CENTER LANE CLOSURE
SHORT OR INTERMEDIATE TERM
STATIONARY - 65 MPH ZONE
(DRAWING CLC-65)

APPROVED MAY 1, 2019	ISSUED UNDER DB 19-001
/S/ PATRICK THOMPSON, P.E. DIRECTOR DESIGN SUPPORT SERVICES BUREAU	**TA 619-10**

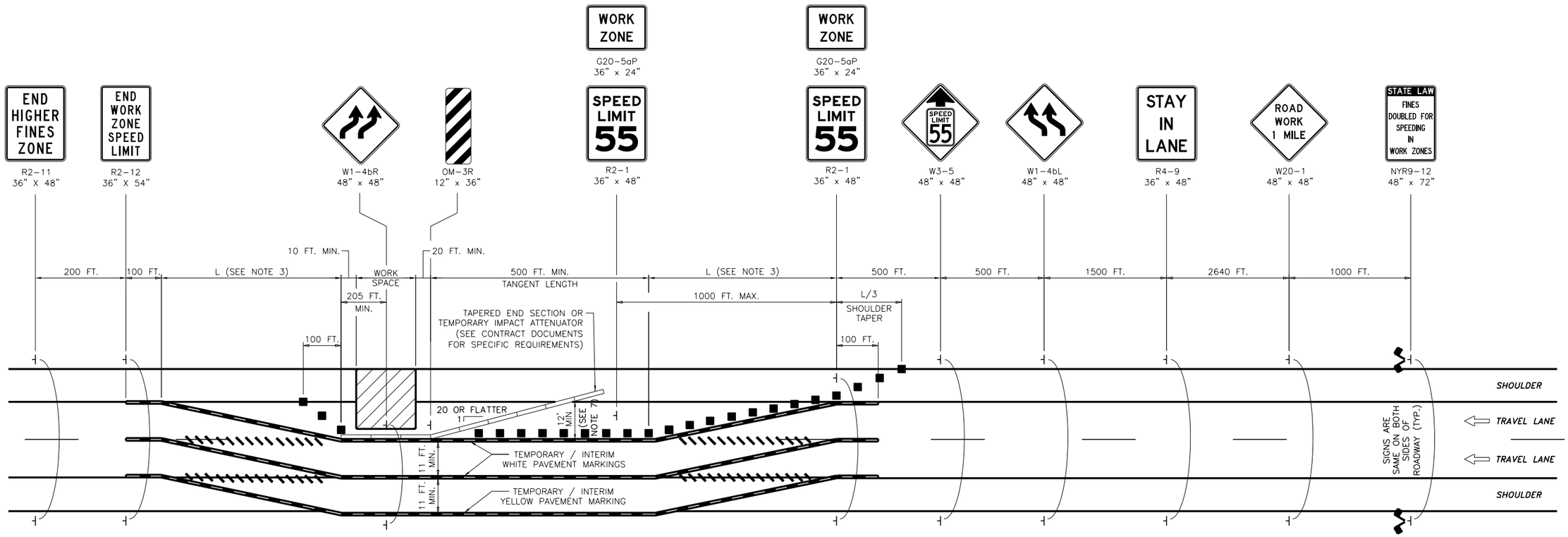

WORK ZONE TRAFFIC CONTROL PLAN

N.T.S.

NOTES:

1. THE PLAN SHOWN IS FOR A DOUBLE LANE SHIFT TO THE LEFT. FOR A DOUBLE LANE SHIFT TO THE RIGHT, CHANGE REVERSE CURVE SIGNS W1-4bL TO W1-4bR AND W1-4bR TO W1-4bL, AND THE OM-3R SIGN TO OM-3L. THE DOUBLE LANE SHIFT PLAN TO THE RIGHT SHALL BE THE MIRROR IMAGE OF THE DOUBLE LANE SHIFT PLAN TO THE LEFT.

2. FOR LANE SHIFTS CONSISTING OF MORE THAN TWO LANES, THE NUMBER OF ARROWS DEPICTED ON THE REVERSE CURVE SIGNS SHALL BE THE SAME AS THE NUMBER OF THROUGH LANES AVAILABLE TO TRAFFIC.

3. TO DETERMINE THE TAPER LENGTH (L), SEE TABLE 6H-4 ON NYSTA STANDARD SHEET 619-01 - WORK ZONE TRAFFIC CONTROL TABLES AND LEGEND. IF CONSTRAINTS EXIST AND L CANNOT BE ACHIEVED, A REDUCTION IN THE TAPER LENGTH TO L/2 MAY BE USED WITH THE APPROVAL OF THE ENGINEER.

4. WHEN THE DISTANCE BETWEEN THE SECOND "WORK ZONE/SPEED LIMIT 55" SIGN (G20-5aP/R2-1) AND THE END OF THE LANE SHIFT PATTERN EXCEEDS 1/2 MILE, ADDITIONAL "WORK ZONE/SPEED LIMIT 55" SIGN(S) (G20-5aP/R2-1) SHALL BE INSTALLED ON BOTH SIDES OF THE ROADWAY TO MAINTAIN A MAXIMUM SPACING OF 1/2 MILE.

5. IN ADDITION TO THE SIGNING SHOWN, "ROAD WORK AHEAD" (W20-1) AND "WORK ZONE/SPEED LIMIT 55" (G20-5aP/R2-1) SIGNS SHALL BE PLACED ALONG ANY ENTRANCE RAMP THAT TERMINATES WITHIN THE WORK ZONE TRAFFIC CONTROL LIMITS. THE LOCATION OF THESE SIGNS SHALL BE DETERMINED BY THE ENGINEER.

6. TEMPORARY / INTERIM PAVEMENT MARKINGS SHALL BE USED IN ACCORDANCE WITH THE CONTRACT DOCUMENTS. ANY EXISTING PAVEMENT MARKINGS THAT ARE CONFLICTING OR MISLEADING SHALL BE REMOVED OR COVERED.

7. WHEN TERMINATING THE APPROACH END OF TEMPORARY CONCRETE BARRIER (TCB) IN AREAS WITH A POSTED SPEED LIMIT OF 45 MPH OR HIGHER, AN APPROVED TEMPORARY IMPACT ATTENUATOR (REDIRECTIVE) SHALL BE USED WHEN THE BLUNT END OF THE TCB IS LESS THAN 12'-0" FROM THE WZTC EDGE OF TRAVELED WAY.

NEW YORK STATE OF OPPORTUNITY. | Thruway Authority

U.S. CUSTOMARY STANDARD SHEET

LANE SHIFT
65 MPH ZONE
(DRAWING LS-65)

APPROVED MAY 1, 2019	ISSUED UNDER DB 19-001
/S/ PATRICK THOMPSON, P.E. DIRECTOR DESIGN SUPPORT SERVICES BUREAU	**TA 619-11**

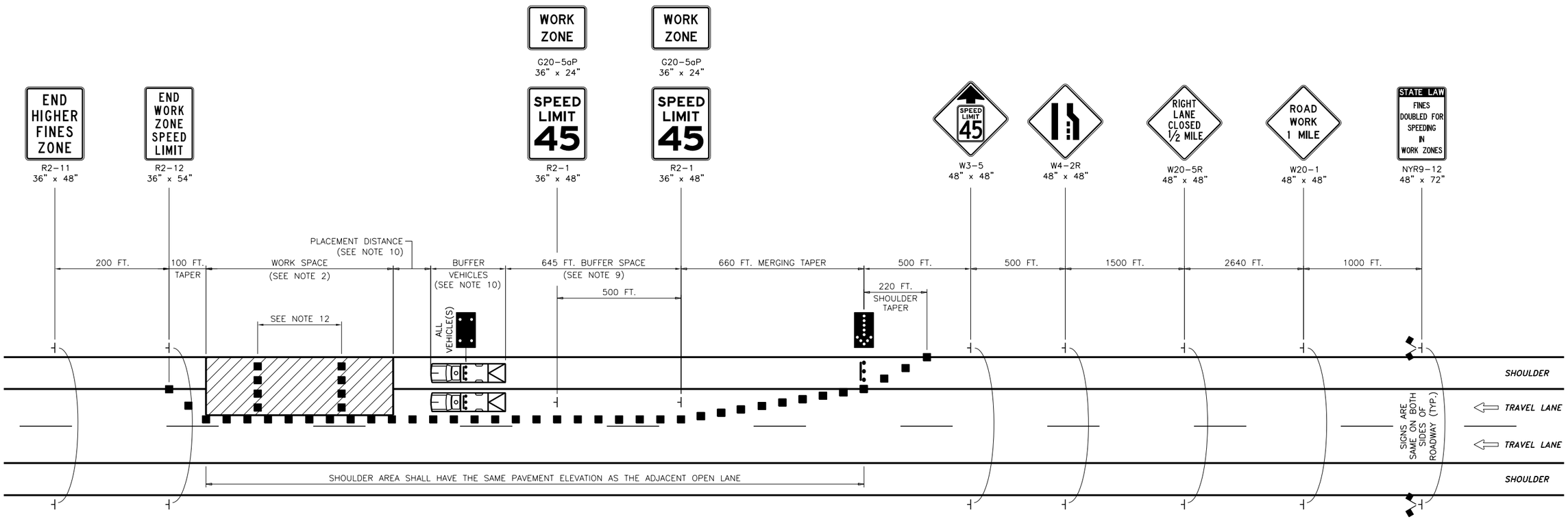

WORK ZONE TRAFFIC CONTROL PLAN

N.T.S.

NOTES:

1. THIS PLAN APPLIES TO TWO-, THREE-, FOUR-, AND FIVE-LANE SECTIONS.

2. THE MAXIMUM LENGTH OF ANY CONTINUOUS WORK SPACE SHALL NOT EXCEED 3 MILES (2 MILES FOR MILLING AND PAVING OPERATIONS). ALL TRAFFIC SHALL BE RE-ESTABLISHED TO ITS NORMAL LANE CONFIGURATION FOR A MINIMUM 2 MILES PRIOR TO A SUCCESSIVE LANE CLOSURE. (THE SEPARATION BETWEEN SUCCESSIVE LANE CLOSURES IS MEASURED FROM THE LAST SIGN OF THE FIRST LANE CLOSURE TO THE BEGINNING OF THE MERGING TAPER OF THE SECOND LANE CLOSURE).

3. THE PLAN SHOWN IS FOR A STATIONARY RIGHT LANE CLOSURE. FOR A STATIONARY LEFT LANE CLOSURE, SUBSTITUTE "LEFT LANE CLOSED 1/2 MILE" SIGN (W20-5L) FOR THE "RIGHT LANE CLOSED 1/2 MILE" SIGN (W20-5R) AND LEFT LANE ENDS SYMBOL SIGN (W4-2L) FOR THE RIGHT LANE ENDS SYMBOL SIGN (W4-2R). THE STATIONARY LEFT LANE CLOSURE PLAN SHALL BE THE MIRROR IMAGE OF THE PLAN SHOWN WITH THE EXCEPTION THAT THE "WORK ZONE/SPEED LIMIT 45" SIGNS (G20-5aP/R2-1) AND THE "SPEED LIMIT 55" SIGN (R2-1) AT THE END OF THE WORK ZONE SHALL BE INSTALLED ON THE RIGHT SIDE OF THE ROADWAY.

4. FOR A STATIONARY LANE CLOSURE IN AN AREA WHERE THE USABLE LEFT SHOULDER/MEDIAN WIDTH IS LESS THAN 6 FEET, LEFT SIDE SIGNS SHALL BE MOUNTED ON THE MEDIAN BARRIER. IF THE TOTAL MEDIAN WIDTH IS LESS THAN 6 FEET, LEFT SIDE SIGNS SHALL NOT BE REQUIRED.

5. ON ROADWAY SECTIONS WHERE THE USABLE SHOULDER IS LESS THAN 8 FEET, A MOBILE LANE CLOSURE PLAN SHALL BE USED TO INSTALL AND REMOVE TEMPORARY TRAFFIC CONTROL DEVICES. THE SAME SHALL ALSO APPLY WHEN COVERING AND UNCOVERING PREVIOUSLY INSTALLED SIGNS.

6. WHEN TRAFFIC IS REDUCED TO A SINGLE LANE, THE "WORK ZONE/SPEED LIMIT 45" SIGNS (G20-5aP/R2-1) AND THE "SPEED LIMIT 55" SIGN (R2-1) AT THE END OF THE WORK ZONE SHALL BE INSTALLED ON THE RIGHT SIDE OF THE ROADWAY ONLY. IF MULTIPLE LANES ARE OPEN TO TRAFFIC, THE SIGNS SHALL BE INSTALLED ON BOTH SIDES OF THE ROADWAY.

7. WHEN THE DISTANCE BETWEEN THE SECOND "WORK ZONE/SPEED LIMIT 45" SIGN (G20-5aP/R2-1) AND THE END OF THE WORK SPACE EXCEEDS 1/2 MILE, ADDITIONAL "WORK ZONE/SPEED LIMIT 45" SIGN(S) (G20-5aP/R2-1) SHALL BE INSTALLED ON THE RIGHT SIDE OF THE OPEN TRAVEL LANE, OR BOTH SIDES OF MULTIPLE OPEN TRAVEL LANES, TO MAINTAIN A MAXIMUM SPACING OF 1/2 MILE.

8. IN ADDITION TO THE SIGNING SHOWN, "ROAD WORK AHEAD" (W20-1) AND "WORK ZONE/SPEED LIMIT 45" (G20-5aP/R2-1) SIGNS SHALL BE PLACED ALONG ANY ENTRANCE RAMP THAT TERMINATES WITHIN THE WORK ZONE TRAFFIC CONTROL LIMITS. THE LOCATION OF THESE SIGNS SHALL BE DETERMINED BY THE ENGINEER.

9. THE LENGTH OF THE BUFFER SPACE SHALL BE EXTENDED, AS ORDERED BY THE ENGINEER, TO ENSURE ADEQUATE SIGHT DISTANCE FOR VEHICLES APPROACHING THE LANE CLOSURE TAPER. IN CASES WHERE RESTRICTIVE FEATURES ARE PRESENT, A REDUCTION IN THE BUFFER SPACE LENGTH MAY BE PERMITTED WITH THE APPROVAL OF THE ENGINEER.

10. BARRIER VEHICLES SHALL BE PROVIDED IN ACCORDANCE WITH SECTION 619 OF THE STANDARD SPECIFICATIONS. FOR BARRIER VEHICLE USE AND PLACEMENT REQUIREMENTS, SEE TABLES NY1-A AND NY2-A ON THE "WORK ZONE TRAFFIC CONTROL TABLES AND LEGEND" DRAWING.

11. EXISTING PAVEMENT MARKINGS SHALL BE MAINTAINED BY THE CONTRACTOR WITHIN THE WORK ZONE TRAFFIC CONTROL LIMITS.

12. IN LONG WORK SPACES (1500 FEET AND GREATER), TWO DRUMS, TWO TALL CONES, OR TWO OVERSIZED VERTICAL PANELS SHALL BE PLACED TRANSVERSELY ACROSS EACH CLOSED LANE (AND SHOULDER IF WIDTH IS 8 FEET OR GREATER) AT MAXIMUM INTERVALS OF 800 FEET. IN ADDITION, TWO DRUMS, TWO TALL CONES, OR TWO OVERSIZED VERTICAL PANELS SHALL BE SIMILARLY PLACED IN ADVANCE OF ANY TRANSVERSE DROP-OFF OF 1 1/2 INCHES OR GREATER.

NEW YORK STATE OF OPPORTUNITY. | Thruway Authority

U.S. CUSTOMARY STANDARD SHEET

SINGLE LANE CLOSURE
SHORT OR INTERMEDIATE TERM
STATIONARY - 55 MPH ZONE
(DRAWING SLC-55)

APPROVED MAY 1, 2019	ISSUED UNDER DB 19-001
/S/ PATRICK THOMPSON, P.E. DIRECTOR DESIGN SUPPORT SERVICES BUREAU	**TA 619-12**

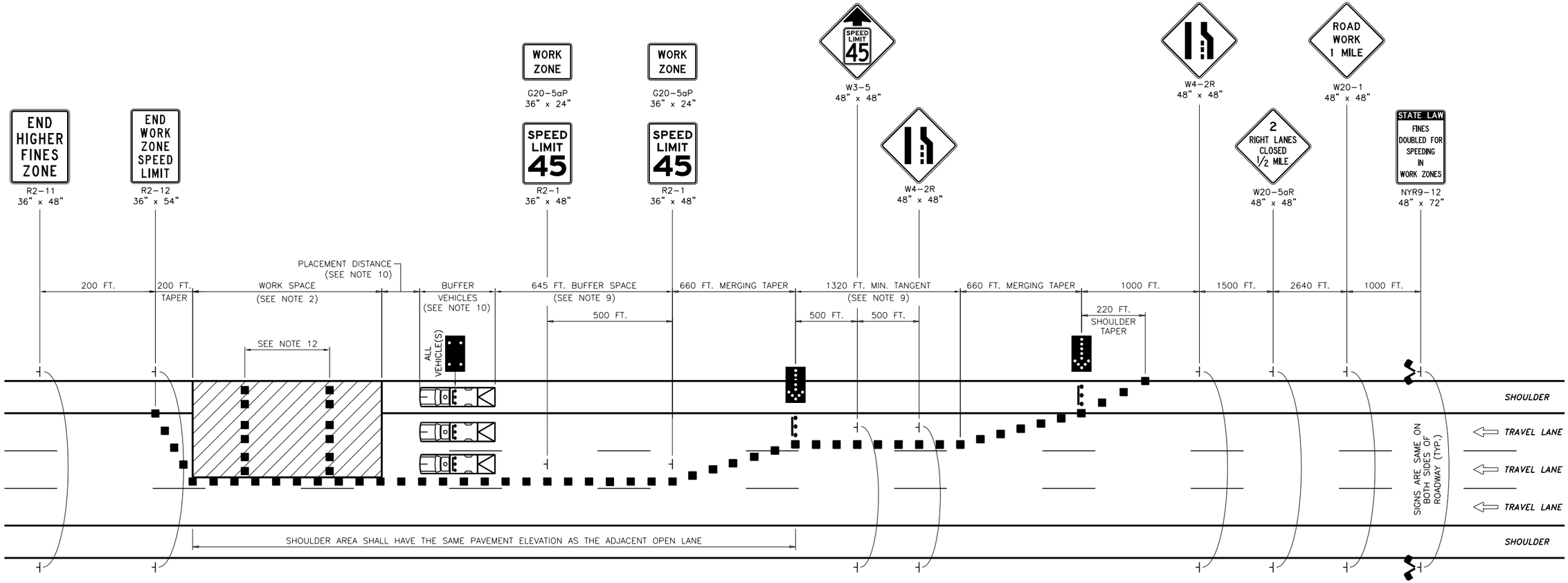

WORK ZONE TRAFFIC CONTROL PLAN

N.T.S.

NOTES:

1. THIS PLAN APPLIES TO THREE-, FOUR-, AND FIVE-LANE SECTIONS.
2. THE MAXIMUM LENGTH OF ANY CONTINUOUS WORK SPACE SHALL NOT EXCEED 3 MILES (2 MILES FOR MILLING AND PAVING OPERATIONS). ALL TRAFFIC SHALL BE RE-ESTABLISHED TO ITS NORMAL LANE CONFIGURATION FOR A MINIMUM 2 MILES PRIOR TO A SUCCESSIVE LANE CLOSURE. (THE SEPARATION BETWEEN SUCCESSIVE LANE CLOSURES IS MEASURED FROM THE LAST SIGN OF THE FIRST LANE CLOSURE TO THE BEGINNING OF THE MERGING TAPER OF THE SECOND LANE CLOSURE).
3. THE PLAN SHOWN IS FOR A STATIONARY RIGHT DOUBLE LANE CLOSURE. FOR A STATIONARY LEFT DOUBLE LANE CLOSURE, SUBSTITUTE "LEFT TWO LANES CLOSED 1/2 MILE" SIGN (W20-5aL) FOR THE "RIGHT TWO LANES CLOSED 1/2 MILE" SIGN (W20-5aR) AND LEFT LANE ENDS SYMBOL SIGN (W4-2L) FOR THE RIGHT LANE ENDS SYMBOL SIGN (W4-2R). THE STATIONARY LEFT DOUBLE LANE CLOSURE PLAN SHALL BE THE MIRROR IMAGE OF THE PLAN SHOWN WITH THE EXCEPTION THAT THE "WORK ZONE/SPEED LIMIT 45" SIGNS (G20-5aP/R2-1) SHALL BE INSTALLED ON THE RIGHT SIDE OF THE ROADWAY.
4. FOR A STATIONARY DOUBLE LANE CLOSURE IN AN AREA WHERE THE USABLE LEFT SHOULDER/MEDIAN WIDTH IS LESS THAN 6 FEET, LEFT SIDE SIGNS SHALL BE MOUNTED ON THE MEDIAN BARRIER. IF THE TOTAL MEDIAN WIDTH IS LESS THAN 6 FEET, LEFT SIDE SIGNS SHALL NOT BE REQUIRED.
5. ON ROADWAY SECTIONS WHERE THE USABLE SHOULDER IS LESS THAN 8 FEET, A MOBILE LANE CLOSURE PLAN SHALL BE USED TO INSTALL AND REMOVE TEMPORARY TRAFFIC CONTROL DEVICES. THE SAME SHALL ALSO APPLY WHEN COVERING AND UNCOVERING PREVIOUSLY INSTALLED SIGNS.
6. WHEN TRAFFIC IS REDUCED TO A SINGLE LANE, THE "WORK ZONE/SPEED LIMIT 45" SIGNS (G20-5aP/R2-1) SHALL BE INSTALLED ON THE RIGHT SIDE OF THE ROADWAY ONLY. IF MULTIPLE LANES ARE OPEN TO TRAFFIC, THE SIGNS SHALL BE INSTALLED ON BOTH SIDES OF THE ROADWAY.
7. WHEN THE DISTANCE BETWEEN THE SECOND "WORK ZONE/SPEED LIMIT 45" SIGN (G20-5aP/R2-1) AND THE END OF THE WORK SPACE EXCEEDS 1/2 MILE, ADDITIONAL "WORK ZONE/SPEED LIMIT 45" SIGN(S) (G20-5aP/R2-1) SHALL BE INSTALLED ON THE RIGHT SIDE OF THE OPEN TRAVEL LANE, OR BOTH SIDES OF MULTIPLE OPEN TRAVEL LANES, TO MAINTAIN A MAXIMUM SPACING OF 1/2 MILE.
8. IN ADDITION TO THE SIGNING SHOWN, "ROAD WORK AHEAD" (W20-1) AND "WORK ZONE/SPEED LIMIT 45" (G20-5aP/R2-1) SIGNS SHALL BE PLACED ALONG ANY ENTRANCE RAMP THAT TERMINATES WITHIN THE WORK ZONE TRAFFIC CONTROL LIMITS. THE LOCATION OF THESE SIGNS SHALL BE DETERMINED BY THE ENGINEER.
9. THE LENGTH OF THE TANGENT AND/OR BUFFER SPACE SHALL BE EXTENDED, AS ORDERED BY THE ENGINEER, TO ENSURE ADEQUATE SIGHT DISTANCE FOR VEHICLES APPROACHING THE LANE CLOSURE TAPER(S). IN CASES WHERE RESTRICTIVE FEATURES ARE PRESENT, A REDUCTION IN THE TANGENT AND/OR BUFFER SPACE LENGTH MAY BE PERMITTED WITH THE APPROVAL OF THE ENGINEER.
10. BARRIER VEHICLES SHALL BE PROVIDED IN ACCORDANCE WITH SECTION 619 OF THE STANDARD SPECIFICATIONS. FOR BARRIER VEHICLE USE AND PLACEMENT REQUIREMENTS, SEE TABLES NY1-A AND NY2-A ON NYSTA STANDARD SHEET 619-01 - WORK ZONE TRAFFIC CONTROL TABLES AND LEGEND.
11. EXISTING PAVEMENT MARKINGS SHALL BE MAINTAINED BY THE CONTRACTOR WITHIN THE WORK ZONE TRAFFIC CONTROL LIMITS.
12. IN LONG WORK SPACES (1500 FEET AND GREATER), TWO DRUMS, TWO TALL CONES, OR TWO OVERSIZED VERTICAL PANELS SHALL BE PLACED TRANSVERSELY ACROSS EACH CLOSED LANE (AND SHOULDER IF WIDTH IS 8 FEET OR GREATER) AT MAXIMUM INTERVALS OF 800 FEET. IN ADDITION, TWO DRUMS, TWO TALL CONES, OR TWO OVERSIZED VERTICAL PANELS SHALL BE SIMILARLY PLACED IN ADVANCE OF ANY TRANSVERSE DROP-OFF OF 1 1/2 INCHES OR GREATER.

NEW YORK STATE OF OPPORTUNITY. | Thruway Authority

U.S. CUSTOMARY STANDARD SHEET

DOUBLE LANE CLOSURE
SHORT OR INTERMEDIATE TERM
STATIONARY - 55 MPH ZONE
(DRAWING DLC-55)

APPROVED MAY 1, 2019

/S/ PATRICK THOMPSON, P.E.
DIRECTOR DESIGN SUPPORT SERVICES BUREAU

ISSUED UNDER DB 19-001

TA 619-13

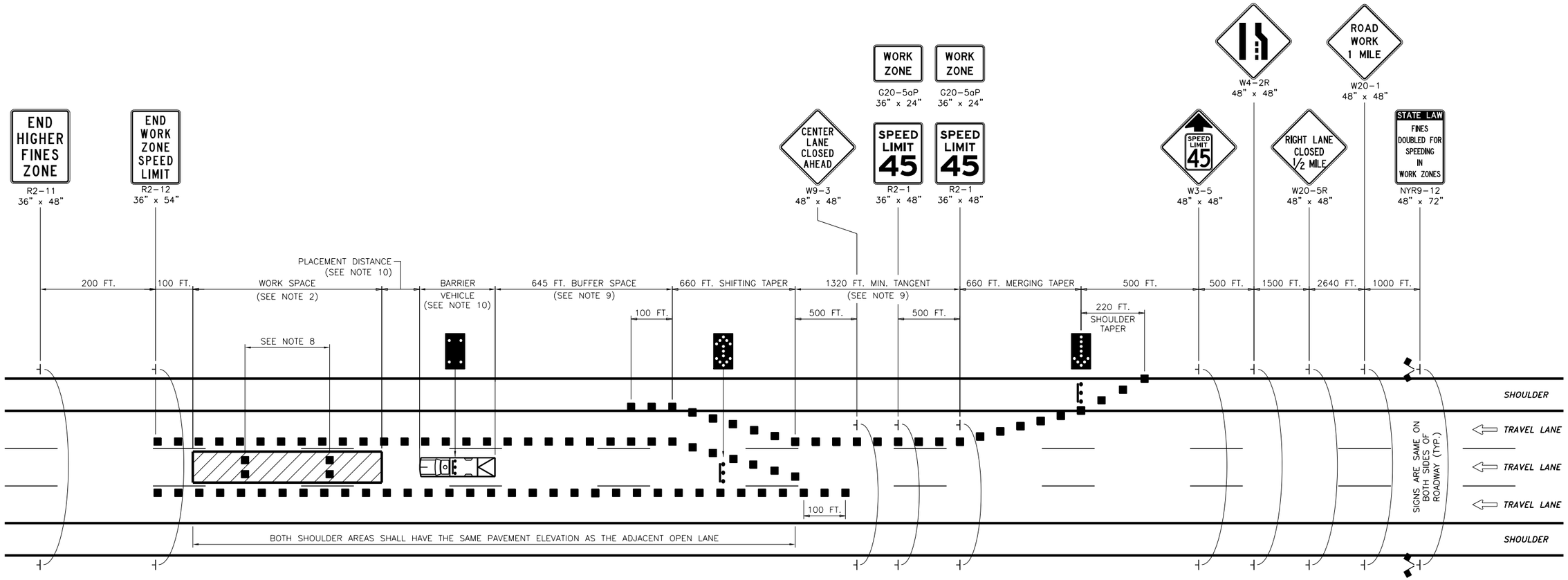

WORK ZONE TRAFFIC CONTROL PLAN

N.T.S.

NOTES:

1. THIS PLAN SHALL NOT BE USED WITHOUT FIRST CONSULTING THE ENGINEER AND DIVISION TRAFFIC SUPERVISION.

2. THE MAXIMUM LENGTH OF ANY CONTINUOUS WORK SPACE SHALL NOT EXCEED 3 MILES (2 MILES FOR MILLING AND PAVING OPERATIONS). ALL TRAFFIC SHALL BE RE-ESTABLISHED TO ITS NORMAL LANE CONFIGURATION FOR A MINIMUM 2 MILES PRIOR TO A SUCCESSIVE LANE CLOSURE. (THE SEPARATION BETWEEN SUCCESSIVE LANE CLOSURES IS MEASURED FROM THE LAST SIGN OF THE FIRST LANE CLOSURE TO THE BEGINNING OF THE MERGING TAPER OF THE SECOND LANE CLOSURE).

3. THE PLAN SHOWN IS FOR A STATIONARY CENTER LANE CLOSURE USING A RIGHT LANE DIVERSION. FOR A STATIONARY CENTER LANE CLOSURE USING A LEFT LANE DIVERSION, SUBSTITUTE "LEFT LANE CLOSED 1/2 MILE" SIGN (W20-5L) FOR THE "RIGHT LANE CLOSED 1/2 MILE" SIGN (W20-5R) AND LEFT LANE ENDS SYMBOL SIGN (W4-2L) FOR THE RIGHT LANE ENDS SYMBOL SIGN (W4-2R). THE PLAN FOR A STATIONARY CENTER LANE CLOSURE USING A LEFT LANE DIVERSION SHALL BE THE MIRROR IMAGE OF THE PLAN SHOWN.

4. FOR A STATIONARY CENTER LANE CLOSURE IN AN AREA WHERE THE USABLE LEFT SHOULDER/MEDIAN WIDTH IS LESS THAN 6 FEET, LEFT SIDE SIGNS SHALL BE MOUNTED ON THE MEDIAN BARRIER. IF THE TOTAL MEDIAN WIDTH IN A RIGHT LANE DIVERSION PLAN IS LESS THAN 6 FEET, LEFT SIDE SIGNS SHALL NOT BE REQUIRED. IF THE TOTAL MEDIAN WIDTH IN A LEFT LANE DIVERSION PLAN IS LESS THAN 6 FEET, LEFT SIDE SIGNS IN ADVANCE OF THE SHOULDER TAPER AND BEYOND THE WORK SPACE SHALL NOT BE REQUIRED.

5. ON ROADWAY SECTIONS WHERE THE USABLE SHOULDER IS LESS THAN 8 FEET, A MOBILE LANE CLOSURE PLAN SHALL BE USED TO INSTALL AND REMOVE TEMPORARY TRAFFIC CONTROL DEVICES. THE SAME SHALL ALSO APPLY WHEN COVERING AND UNCOVERING PREVIOUSLY INSTALLED SIGNS.

6. WHEN TRAFFIC IS REDUCED TO TWO LANES, THE "WORK ZONE/SPEED LIMIT 45" SIGNS (G20-5aP/R2-1) SHALL BE INSTALLED ON BOTH SIDES OF THE ROADWAY. WHEN THE DISTANCE BETWEEN THE SECOND "WORK ZONE/SPEED LIMIT 45" SIGN (G20-5aP/R2-1) AND THE END OF THE WORK SPACE EXCEEDS 1/2 MILE, ADDITIONAL "WORK ZONE/SPEED LIMIT 45" SIGN(S) (G20-5aP/R2-1) SHALL BE INSTALLED ON THE RIGHT SIDE OF EACH OPEN LANE TO MAINTAIN A MAXIMUM SPACING OF 1/2 MILE.

7. IN ADDITION TO THE SIGNING SHOWN, "ROAD WORK AHEAD" (W20-1) AND "WORK ZONE/SPEED LIMIT 45" (NYW8-45/R2-1) SIGNS SHALL BE PLACED ALONG ANY ENTRANCE RAMP THAT TERMINATES WITHIN THE WORK ZONE TRAFFIC CONTROL LIMITS. THE LOCATION OF THESE SIGNS SHALL BE DETERMINED BY THE ENGINEER.

8. IN LONG WORK SPACES (1500 FEET AND GREATER), TWO DRUMS, TWO TALL CONES, OR TWO OVERSIZED VERTICAL PANELS SHALL BE PLACED TRANSVERSELY ACROSS EACH CLOSED LANE (AND SHOULDER IF WIDTH IS 8 FEET OR GREATER) AT MAXIMUM INTERVALS OF 800 FEET. IN ADDITION, TWO DRUMS, TWO TALL CONES, OR TWO OVERSIZED VERTICAL PANELS SHALL BE SIMILARLY PLACED IN ADVANCE OF ANY TRANSVERSE DROP-OFF OF 1 1/2 INCHES OR GREATER.

9. THE LENGTH OF THE TANGENT AND/OR BUFFER SPACE SHALL BE EXTENDED, AS ORDERED BY THE ENGINEER, TO ENSURE ADEQUATE SIGHT DISTANCE FOR VEHICLES APPROACHING THE LANE CLOSURE TAPER AND/OR SHIFTING TAPER. IN CASES WHERE RESTRICTIVE FEATURES ARE PRESENT, A REDUCTION IN THE TANGENT AND/OR BUFFER SPACE LENGTH MAY BE PERMITTED WITH THE APPROVAL OF THE ENGINEER.

10. BARRIER VEHICLES SHALL BE PROVIDED IN ACCORDANCE WITH SECTION 619 OF THE STANDARD SPECIFICATIONS. FOR BARRIER VEHICLE USE AND PLACEMENT REQUIREMENTS, SEE TABLES NY1-A AND NY2-A ON NYSTA STANDARD SHEET 619-01 – WORK ZONE TRAFFIC CONTROL TABLES AND LEGEND.

11. EXISTING PAVEMENT MARKINGS SHALL BE MAINTAINED BY THE CONTRACTOR WITHIN THE WORK ZONE TRAFFIC CONTROL LIMITS.

NEW YORK STATE OF OPPORTUNITY. Thruway Authority

U.S. CUSTOMARY STANDARD SHEET

CENTER LANE CLOSURE
SHORT OR INTERMEDIATE TERM
STATIONARY - 55 MPH ZONE
(DRAWING CLC-55)

APPROVED MAY 1, 2019	ISSUED UNDER DB 19-001
/S/ PATRICK THOMPSON, P.E. DIRECTOR DESIGN SUPPORT SERVICES BUREAU	**TA 619-14**

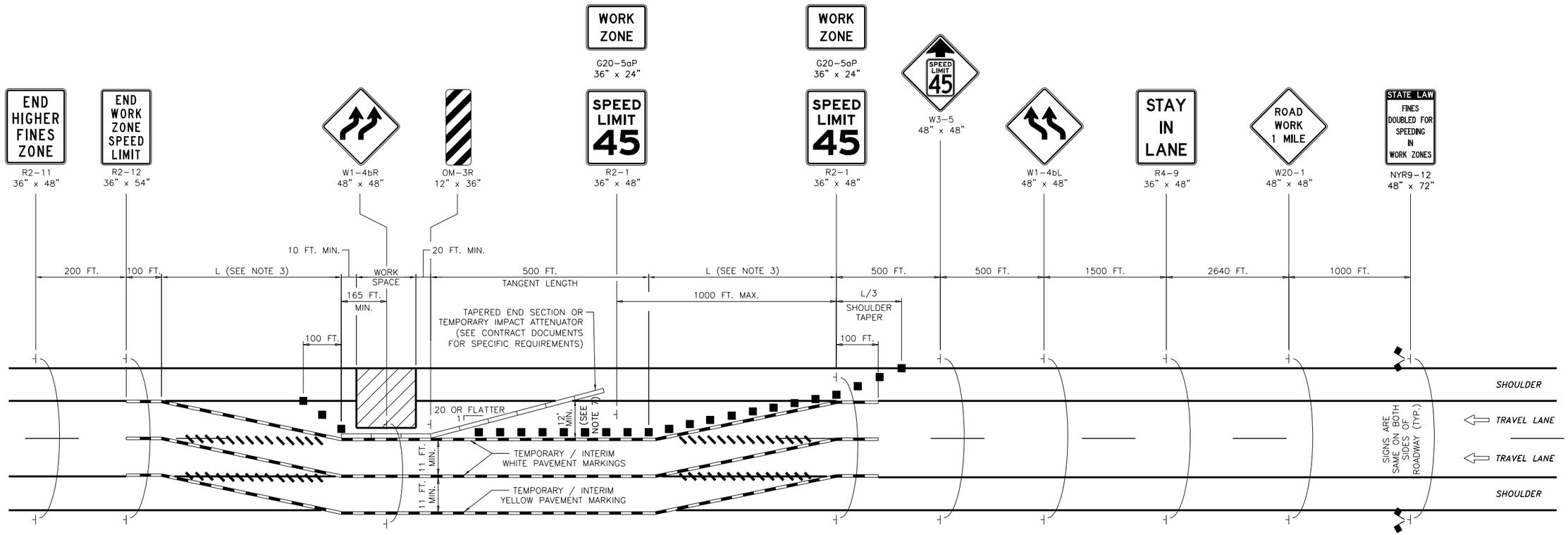

WORK ZONE TRAFFIC CONTROL PLAN

N.T.S.

NOTES:

1. THE PLAN SHOWN IS FOR A DOUBLE LANE SHIFT TO THE LEFT. FOR A DOUBLE LANE SHIFT TO THE RIGHT, CHANGE REVERSE CURVE SIGNS W1-4bL TO W1-4bR AND W1-4bR TO W1-4bL, AND THE OM-3R SIGN TO OM-3L. THE DOUBLE LANE SHIFT PLAN TO THE RIGHT SHALL BE THE MIRROR IMAGE OF THE DOUBLE LANE SHIFT PLAN TO THE LEFT.

2. FOR LANE SHIFTS CONSISTING OF MORE THAN TWO LANES, THE NUMBER OF ARROWS DEPICTED ON THE REVERSE CURVE SIGNS SHALL BE THE SAME AS THE NUMBER OF THROUGH LANES AVAILABLE TO TRAFFIC.

3. TO DETERMINE THE TAPER LENGTH (L), SEE TABLE 6H-4 ON NYSTA STANDARD SHEET 619-01 – WORK ZONE TRAFFIC CONTROL TABLES AND LEGEND. IF CONSTRAINTS EXIST AND L CANNOT BE ACHIEVED, A REDUCTION IN THE TAPER LENGTH TO L/2 MAY BE USED WITH THE APPROVAL OF THE ENGINEER.

4. WHEN THE DISTANCE BETWEEN THE SECOND "WORK ZONE/SPEED LIMIT 45" SIGN (G20-5aP/R2-1) AND THE END OF THE LANE SHIFT PATTERN EXCEEDS 1/2 MILE, ADDITIONAL "WORK ZONE/SPEED LIMIT 45" SIGN(S) (G20-5aP/R2-1) SHALL BE INSTALLED ON BOTH SIDES OF THE ROADWAY TO MAINTAIN A MAXIMUM SPACING OF 1/2 MILE.

5. IN ADDITION TO THE SIGNING SHOWN, "ROAD WORK AHEAD" (W20-1) AND "WORK ZONE/SPEED LIMIT 45" (G20-5aP/R2-1) SIGNS SHALL BE PLACED ALONG ANY ENTRANCE RAMP THAT TERMINATES WITHIN THE WORK ZONE TRAFFIC CONTROL LIMITS. THE LOCATION OF THESE SIGNS SHALL BE DETERMINED BY THE ENGINEER.

6. TEMPORARY / INTERIM PAVEMENT MARKINGS SHALL BE USED IN ACCORDANCE WITH THE CONTRACT DOCUMENTS. ANY EXISTING PAVEMENT MARKINGS THAT ARE CONFLICTING OR MISLEADING SHALL BE REMOVED OR COVERED.

7. WHEN TERMINATING THE APPROACH END OF TEMPORARY CONCRETE BARRIER (TCB) IN AREAS WITH A POSTED SPEED LIMIT OF 45 MPH OR HIGHER, AN APPROVED TEMPORARY IMPACT ATTENUATOR (REDIRECTIVE) SHALL BE USED WHEN THE BLUNT END OF THE TCB IS LESS THAN 12'-0" FROM THE WZTC EDGE OF TRAVELED WAY.

NEW YORK STATE OF OPPORTUNITY. | Thruway Authority

U.S. CUSTOMARY STANDARD SHEET

LANE SHIFT
55 MPH ZONE
(DRAWING LS-55)

APPROVED MAY 1, 2019

/S/ PATRICK THOMPSON, P.E.
DIRECTOR DESIGN SUPPORT SERVICES BUREAU

ISSUED UNDER DB 19-001

TA 619-15

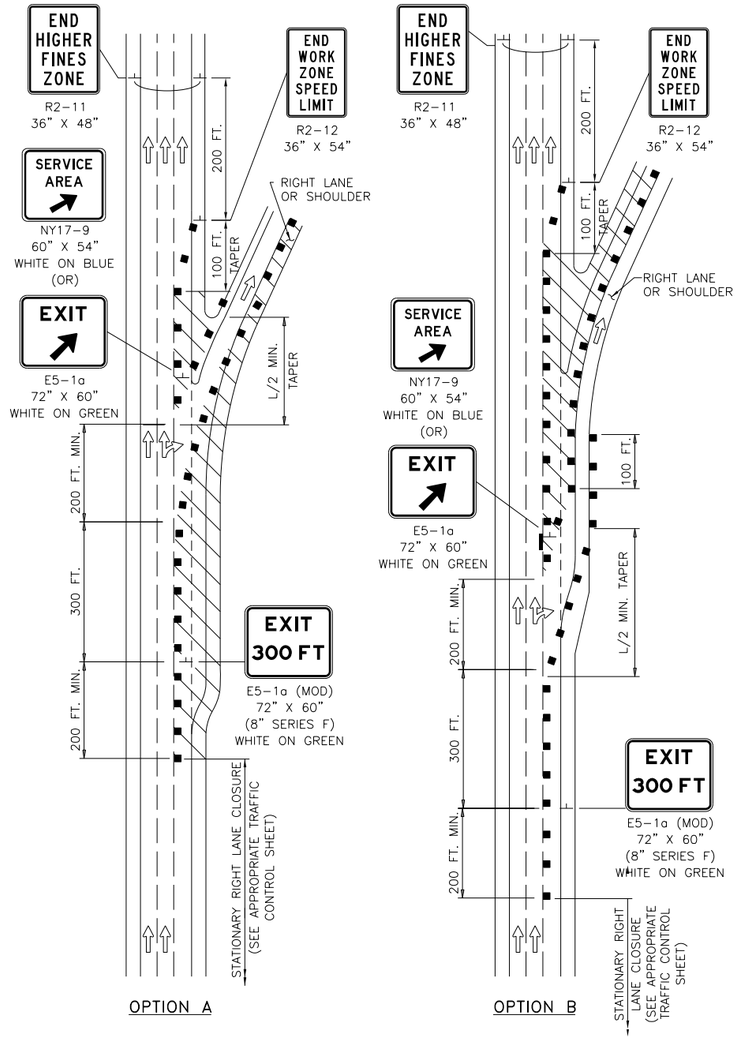

TYPICAL DECELERATION LANE

N.T.S.

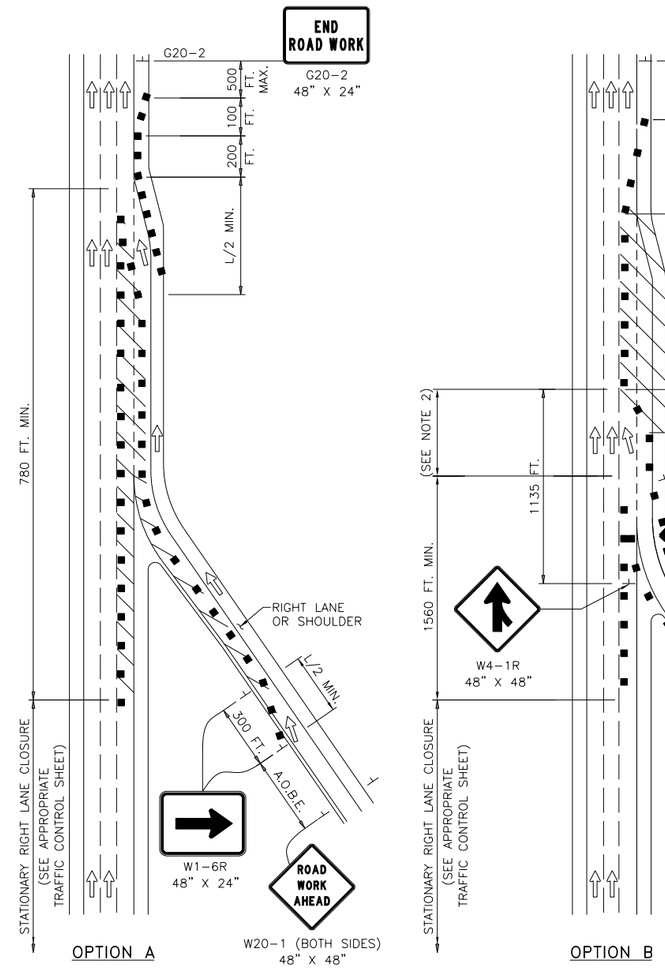

TYPICAL ACCELERATION LANE

N.T.S.

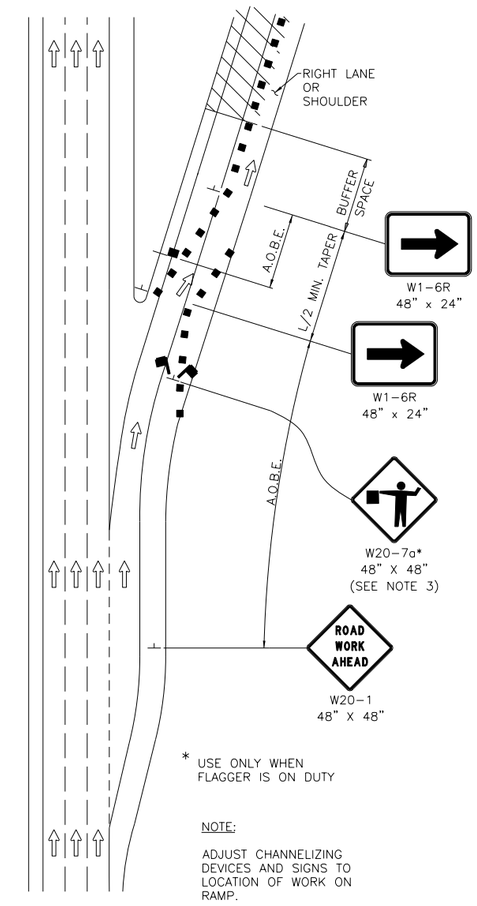

TYPICAL WORK ZONE ON RAMP

N.T.S.

NOTES:

1. "YIELD" (R1-2) AND "YIELD AHEAD" (W3-2) SIGNS ARE REQUIRED WHENEVER A MAINLINE LANE ADJACENT TO AN ACCELERATION LANE (ENTRANCE RAMP) IS CLOSED. IN AREAS WHERE THE MAINLINE ADJACENT TO AN ACCELERATION LANE (ENTRANCE RAMP) IS REDUCED TO A SINGLE THROUGH LANE, A FLAGGER WITH ACCOMPANYING "FLAGGER AHEAD" (W20-7a) SIGN MAY BE USED IN LIEU OF THE "YIELD" AND "YIELD AHEAD" SIGNS. THE FLAGGER WITH ACCOMPANYING "FLAGGER AHEAD" SIGN SHALL BE PLACED ON THE ACCELERATION LANE (ENTRANCE RAMP) IN ACCORDANCE WITH THE GUIDELINES ESTABLISHED IN THE MUTCD. THIS SUBSTITUTION IS NOT PERMITTED IN AREAS WHERE THE ACCELERATION LANE (ENTRANCE RAMP) IS A HIGH-SPEED FREEWAY-TO-FREEWAY CONNECTION RAMP.

2. THE CONTRACTOR SHALL PROVIDE ADEQUATE ACCELERATION DISTANCE FOR THE YIELD CONDITION AS PER THE CONTRACT PLANS OR AS APPROVED BY THE ENGINEER.

3. THE "FLAGGER AHEAD" (W20-7a) SIGN SHALL BE USED WHENEVER THE FLAGGER IS ON DUTY AT THE FLAGGING STATION. THE "FLAGGER AHEAD" SIGN SHALL BE PROMPTLY REMOVED, COVERED, TURNED AWAY FROM TRAFFIC, OR CHANGED TO ANOTHER APPROPRIATE LEGEND WHENEVER THE FLAGGER IS NOT AT THE FLAGGING STATION.

NEW YORK STATE OF OPPORTUNITY. Thruway Authority

U.S. CUSTOMARY STANDARD SHEET

WORK ZONE TRAFFIC CONTROL AT INTERCHANGES, SERVICE AREAS, AND PARKING AREAS (DRAWING INT)

APPROVED MAY 1, 2019

/S/ PATRICK THOMPSON, P.E.
DIRECTOR DESIGN SUPPORT SERVICES BUREAU

ISSUED UNDER DB 19-001

TA 619-16

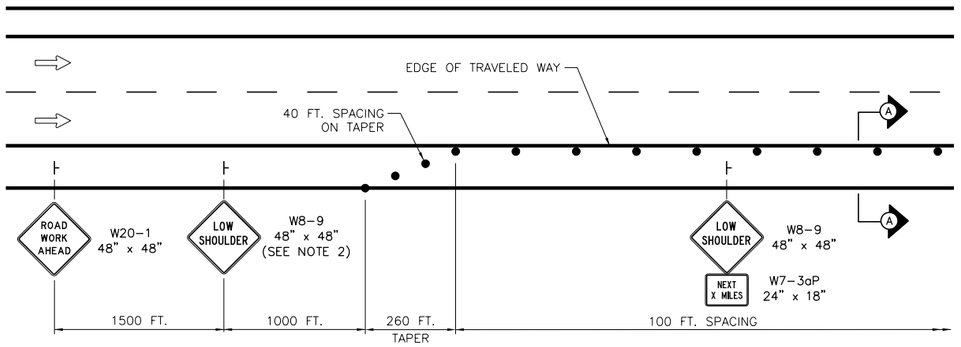

"LOW SHOULDER" DETAIL

DROP-OFF OF 2" TO 4" LOCATED AT EDGE OF TRAVELED WAY OR WITHIN SHOULDER

N.T.S.

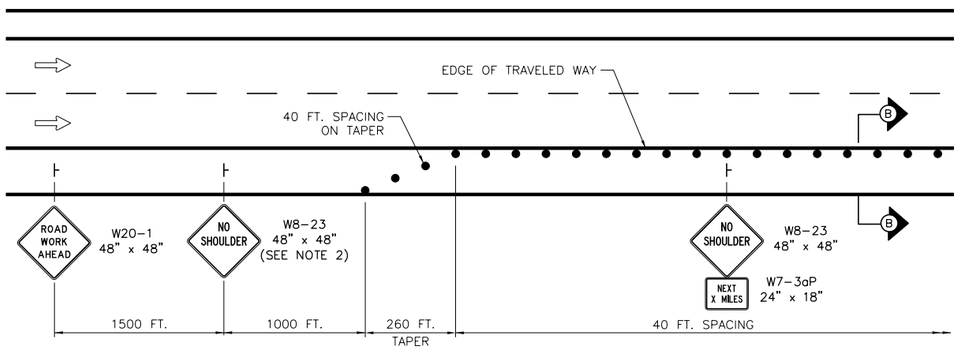

"NO SHOULDER" DETAIL

DROP-OFF OF >4" TO 18" LOCATED AT EDGE OF TRAVELED WAY OR WITHIN SHOULDER

N.T.S.

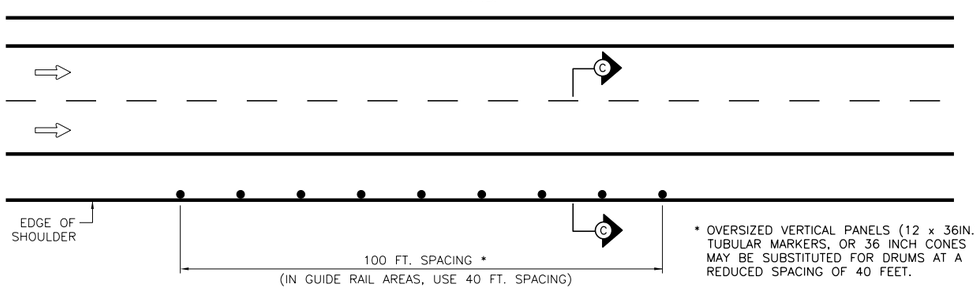

* OVERSIZED VERTICAL PANELS (12 x 36IN.), TUBULAR MARKERS, OR 36 INCH CONES MAY BE SUBSTITUTED FOR DRUMS AT A REDUCED SPACING OF 40 FEET.

"OUTSIDE EDGE OF SHOULDER" DETAIL

DROP-OFF OF >2" TO 18" LOCATED AT OUTSIDE EDGE OF SHOULDER AND SHOULDER WIDTH IS 4 FT. OR GREATER

N.T.S.

NOTES:

1. SIGNING AND DELINEATION ARE SHOWN ALONG THE RIGHT SHOULDER. SIGNING AND DELINEATION FOR THE LEFT SHOULDER SHALL BE THE MIRROR IMAGE OF THE SAME DETAILS.
2. THE "LOW SHOULDER" (W8-9) SIGN OR "NO SHOULDER" (W8-23) SIGN SHALL BE PLACED IN ADVANCE OF THE DRUM TAPER AS SHOWN. SIGNING SHALL BE REPEATED EVERY 1/2 MILE WITH "NEXT X MILES" (W7-3aP) SUPPLEMENTAL PLAQUES.
3. OVERSIZED VERTICAL PANELS (12 x 36 IN.) MAY BE SUBSTITUTED FOR DRUMS. DRUMS OR OVERSIZED VERTICAL PANELS SHALL BE PLACED AND MAINTAINED SUCH THAT AT LEAST TWO-THIRDS OF THEIR HEIGHT IS EXPOSED ABOVE THE PAVEMENT.
4. IF THE DEPTH OF EXCAVATION EXCEEDS 18 INCHES, THE ADJACENT LANE SHALL BE CLOSED OR TEMPORARY CONCRETE BARRIER SHALL BE USED TO PROTECT THE CONDITION.
5. ALL DROP-OFF DETAILS ON THIS SHEET SHOULD BE USED IN CONJUCTION WITH TABLES 619-4A, 619-4B, AND 619-4C OF THE TA 619 STANDARD SPECIFICATIONS.

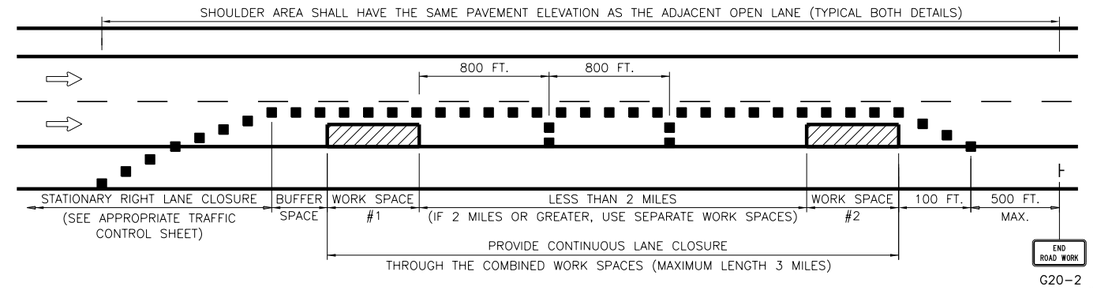

SUCCESSIVE WORK SPACES OCCUPYING SAME LANE

N.T.S.

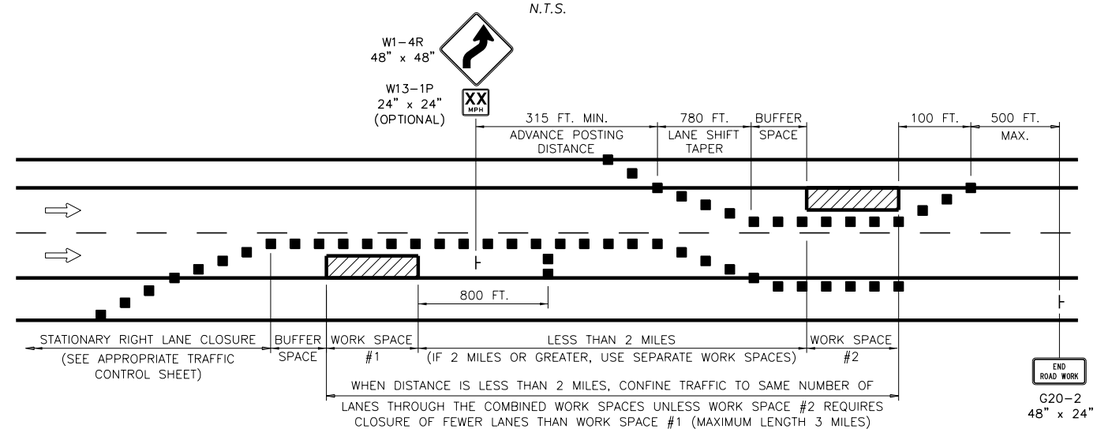

SUCCESSIVE WORK SPACES OCCUPYING DIFFERENT LANES

N.T.S.

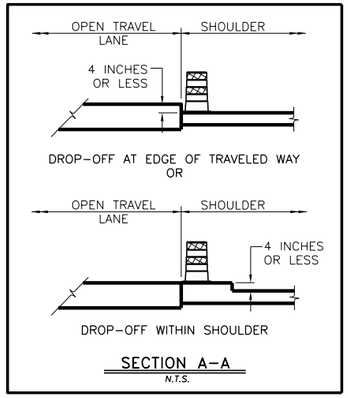

SECTION A-A

N.T.S.

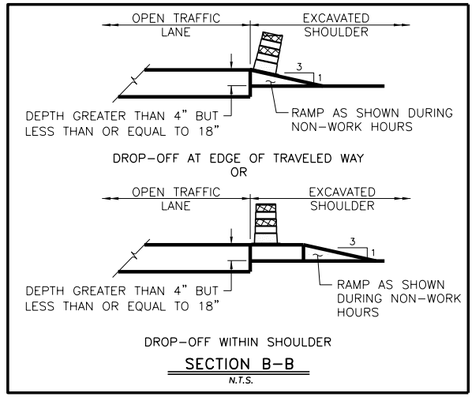

SECTION B-B

N.T.S.

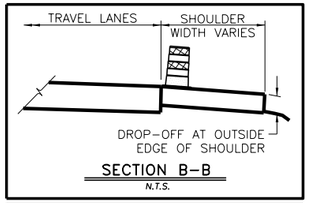

SECTION B-B

N.T.S.

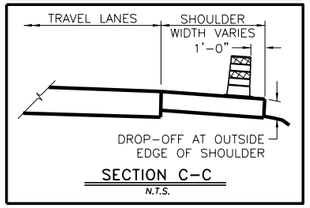

SECTION C-C

N.T.S.

NEW YORK STATE OF OPPORTUNITY. | Thruway Authority

U.S. CUSTOMARY STANDARD SHEET

WORK ZONE TRAFFIC CONTROL FOR MISCELLANEOUS OPERATIONS (DRAWING MO)

APPROVED MAY 1, 2019

/S/ PATRICK THOMPSON, P.E.
DIRECTOR DESIGN SUPPORT SERVICES BUREAU

ISSUED UNDER DB 19-001

TA 619-17

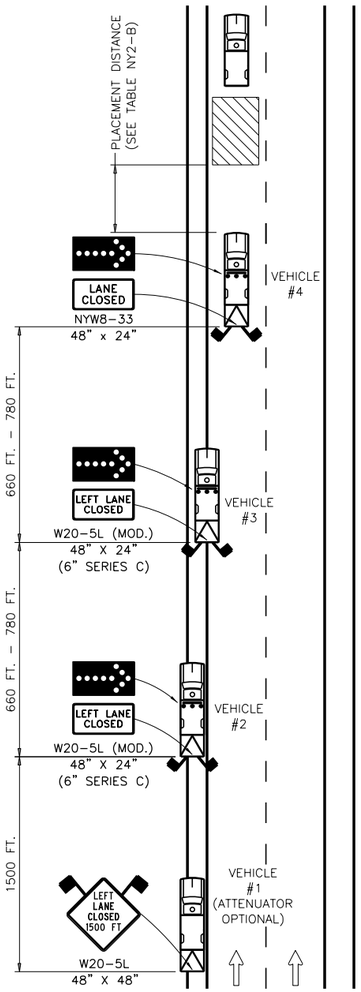

MOBILE OPERATION
LEFT LANE CLOSURE

N.T.S.

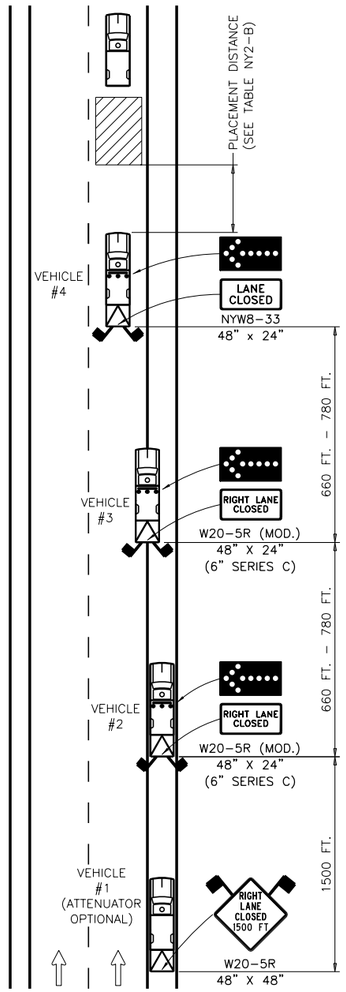

MOBILE OPERATION
RIGHT LANE CLOSURE

N.T.S.

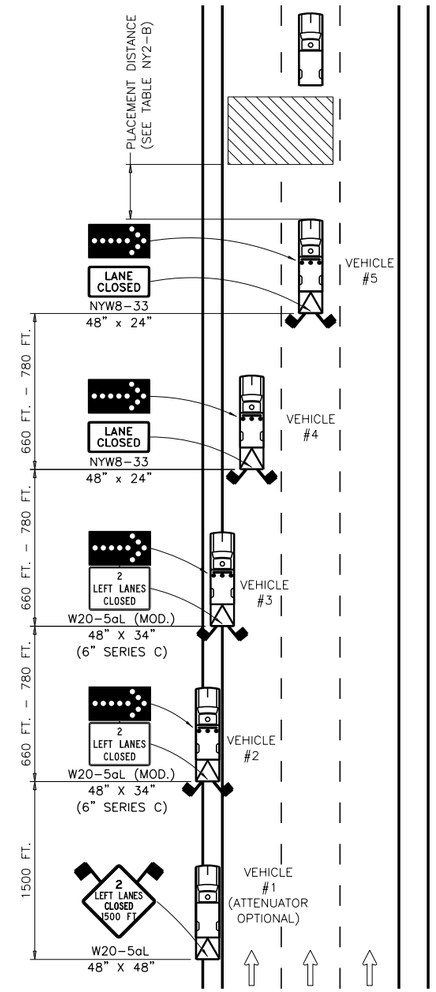

MOBILE OPERATION
LEFT DOUBLE LANE CLOSURE

N.T.S.

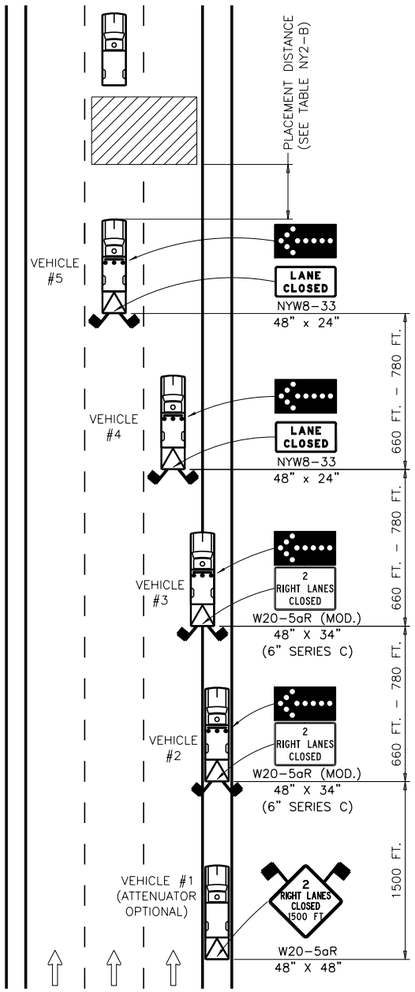

MOBILE OPERATION
RIGHT DOUBLE LANE CLOSURE

N.T.S.

NOTES:

1. THESE PLANS ARE TO BE UTILIZED ONLY WHEN AUTHORIZED BY THE ENGINEER.
2. MOBILE OPERATIONS ARE WORK ACTIVITIES THAT MOVE CONTINUOUSLY OR STOP INTERMITTENTLY FOR SHORT PERIODS IN THE ROADWAY. THE DURATION FOR EACH INTERMITTENT STOP MAY BE APPROXIMATELY 15 MINUTES BEFORE MOVING TO A NEW LOCATION.
3. VEHICLE #4 (LEFT LANE CLOSURE AND RIGHT LANE CLOSURE PLANS) AND VEHICLE #5 (LEFT DOUBLE LANE CLOSURE AND RIGHT DOUBLE LANE CLOSURE PLANS) SHALL NOT BE USED TO TRANSPORT WORKERS, MATERIALS, AND/OR EQUIPMENT TO THE WORK SITE. A SEPARATE WORK VEHICLE(S) SHALL BE REQUIRED.
4. THESE TEMPORARY TRAFFIC CONTROL PLANS SHALL NOT BE ADVANCED THROUGH AN AREA WHERE THERE IS AN EXIT OR ENTRANCE RAMP ON THE SAME SIDE AS THE CLOSED LANE.
5. WHERE THE LEFT LANE IS TO BE CLOSED, VEHICLE #1 AND VEHICLE #2 ARE TO BE LOCATED COMPLETELY ON THE LEFT SHOULDER, VEHICLE #3 STRADDLES THE LEFT SHOULDER AND THE LEFT LANE, AND VEHICLE #4 IS IN THE LEFT LANE.
6. WHERE THE RIGHT LANE IS TO BE CLOSED, VEHICLE #1 AND VEHICLE #2 ARE TO BE LOCATED COMPLETELY ON THE RIGHT SHOULDER, VEHICLE #3 STRADDLES THE RIGHT SHOULDER AND THE RIGHT LANE, AND VEHICLE #4 IS IN THE RIGHT LANE.
7. WHERE THE LEFT TWO LANES ARE TO BE CLOSED, VEHICLE #1 AND VEHICLE #2 ARE TO BE LOCATED COMPLETELY ON THE LEFT SHOULDER, VEHICLE #3 STRADDLES THE LEFT SHOULDER AND THE LEFT LANE, VEHICLE #4 IS IN THE LEFT LANE, AND VEHICLE #5 IS IN THE CENTER LANE.
8. WHERE THE RIGHT TWO LANES ARE TO BE CLOSED, VEHICLE #1 AND VEHICLE #2 ARE TO BE LOCATED COMPLETELY ON THE RIGHT SHOULDER, VEHICLE #3 STRADDLES THE RIGHT SHOULDER AND THE RIGHT LANE, VEHICLE #4 IS IN THE RIGHT LANE, AND VEHICLE #5 IS IN THE CENTER LANE.
9. FOR VEHICLE #2, A TRAILER-MOUNTED ARROW PANEL MAY BE SUBSTITUTED FOR THE TRUCK-MOUNTED ARROW PANEL.
10. FOR VEHICLE #2, THE ATTENUATOR IS OPTIONAL FOR DAYTIME OPERATIONS. FOR NIGHTTIME OPERATIONS, ALL VEHICLES, INCLUDING VEHICLE #1 AND VEHICLE #2 ON THE SHOULDER, SHALL BE EQUIPPED WITH AN ATTENUATOR.
11. FOR VEHICLE #1, A TRUCK-MOUNTED OR TRAILER-MOUNTED PORTABLE VARIABLE MESSAGE SIGN (PVMS) MAY BE USED IN LIEU OF THE SIGN SHOWN. THE PVMS UNIT SHALL BE COMPLETELY ON THE SHOULDER AND SHALL HAVE NO PORTION PROTRUDE OVER THE TRAVEL LANE AT ANY TIME. THE MESSAGE DISPLAYED SHALL BE THE SAME AS THAT SHOWN.

NEW YORK STATE OF OPPORTUNITY. Thruway Authority

U.S. CUSTOMARY STANDARD SHEET

MOBILE LANE CLOSURE
(DRAWING MLC)

APPROVED MAY 1, 2019

/S/ PATRICK THOMPSON, P.E.
DIRECTOR DESIGN SUPPORT SERVICES BUREAU

ISSUED UNDER DB 19-001

TA 619-18

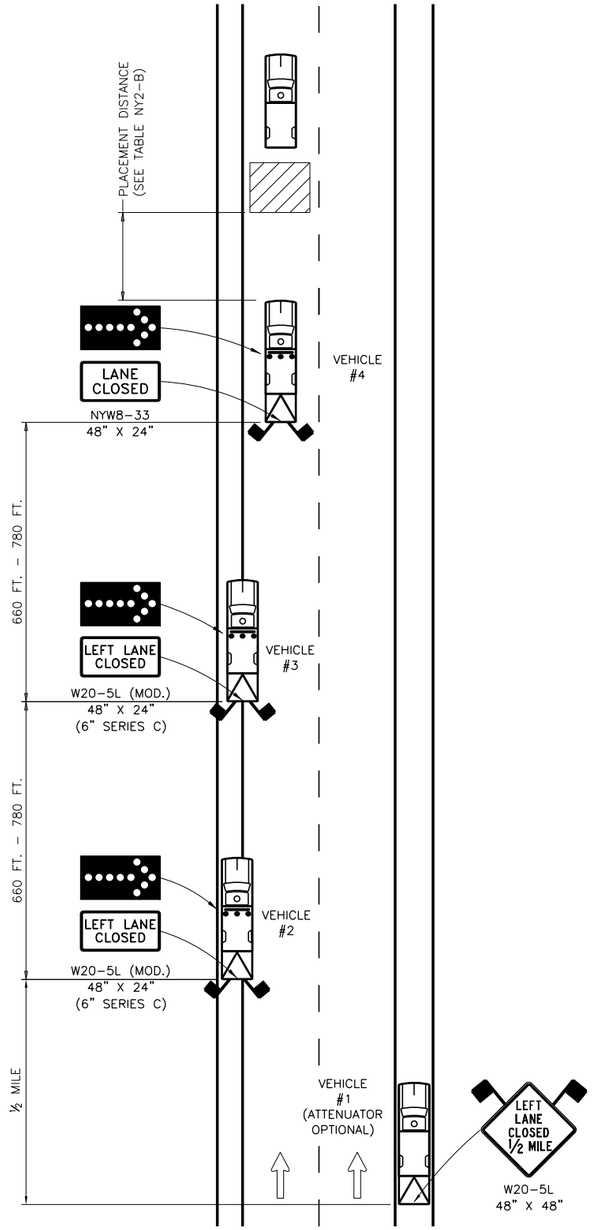

MOBILE OPERATION – SINGLE LANE CLOSURE
IN NARROW SHOULDER AREA

N.T.S.

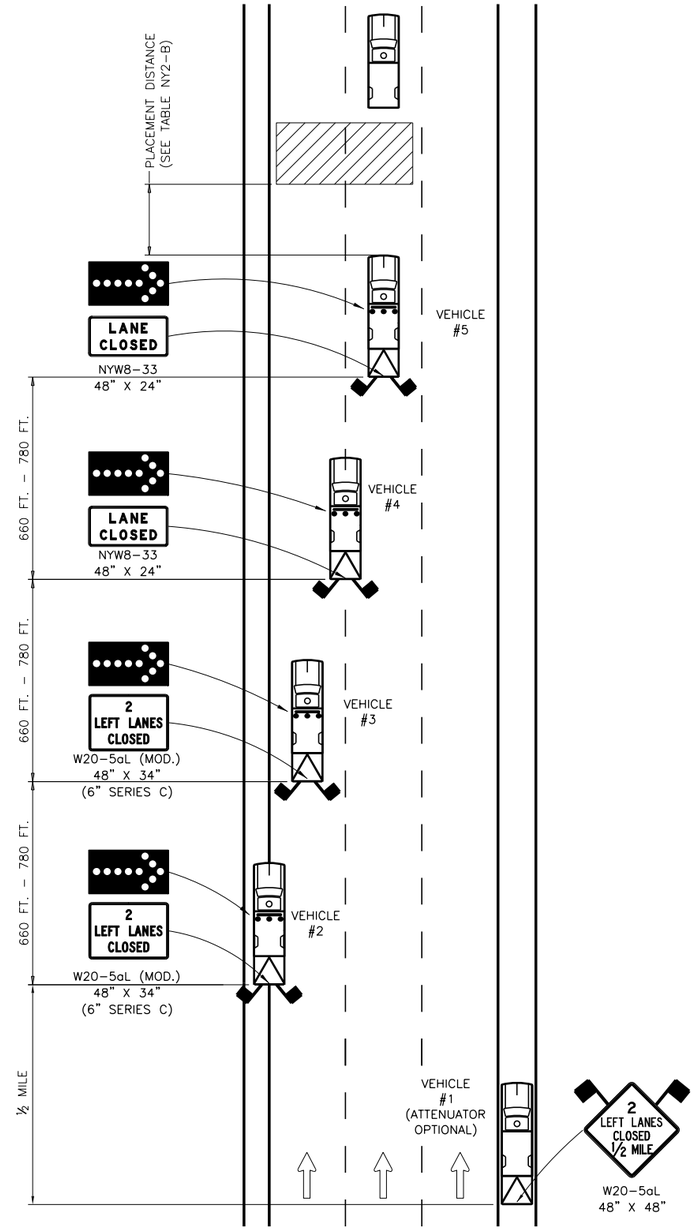

MOBILE OPERATION – DOUBLE LANE CLOSURE
IN NARROW SHOULDER AREA

N.T.S.

GENERAL NOTES:

1. THESE PLANS ARE TO BE UTILIZED ONLY WHEN AUTHORIZED BY THE ENGINEER.
2. MOBILE OPERATIONS ARE WORK ACTIVITIES THAT MOVE CONTINUOUSLY OR STOP INTERMITTENTLY FOR SHORT PERIODS IN THE ROADWAY. THE DURATION FOR EACH INTERMITTENT STOP MAY BE APPROXIMATELY 15 MINUTES BEFORE MOVING TO A NEW LOCATION.
3. VEHICLE #4 (SINGLE LANE CLOSURE PLAN) AND VEHICLE #5 (DOUBLE LANECLOSURE PLAN) SHALL NOT BE USED TO TRANSPORT WORKERS, MATERIALS, AND/OR EQUIPMENT TO THE WORK SITE. A SEPARATE WORK VEHICLE(S) SHALL BE REQUIRED.
4. THESE TEMPORARY TRAFFIC CONTROL PLANS SHALL NOT BE ADVANCED THROUGH AN AREA WHERE THERE IS AN EXIT OR ENTRANCE RAMP ON THE SAME SIDE AS THE CLOSED LANE.
5. FOR VEHICLE #1, A TRUCK-MOUNTED OR TRAILER-MOUNTED PORTABLEVARIABLE MESSAGE SIGN (PVMS) MAY BE USED IN LIEU OF THE SIGN SHOWN. THE PVMS UNIT SHALL BE COMPLETELY ON THE SHOULDER AND SHALL HAVE NO PORTION PROTRUDE OVER THE TRAVEL LANE AT ANY TIME. THE MESSAGE DISPLAYED SHALL BE THE SAME AS THAT SHOWN.

SINGLE LANE CLOSURE NOTES:

1. THE PLAN SHOWN IS FOR A MOBILE OPERATION INVOLVING A LEFT SINGLE LANE CLOSURE IN AN AREA WHERE THE USABLE LEFT SHOULDER/MEDIAN WIDTH IS LESS THAN 8 FEET.
2. WHERE THE LEFT LANE IS TO BE CLOSED, VEHICLE #1 IS TO BE LOCATED COMPLETELY ON THE RIGHT SHOULDER, VEHICLE #2 IS AS FAR LEFT ON THE LEFT SHOULDER AS CONDITIONS PERMIT, VEHICLE #3 STRADDLES THE LEFT SHOULDER AND THE LEFT LANE, AND VEHICLE #4 IS IN THE LEFT LANE.
3. IN AREAS WHERE THERE IS LITTLE TO NO LEFT SHOULDER/MEDIAN WIDTH, VEHICLE #2 AND VEHICLE #3 SHALL BE IN THE LEFT LANE.

DOUBLE LANE CLOSURE NOTES:

1. THE PLAN SHOWN IS FOR A MOBILE OPERATION INVOLVING A LEFT DOUBLE LANE CLOSURE IN AN AREA WHERE THE USABLE LEFT SHOULDER/MEDIAN WIDTH IS LESS THAN 8 FEET.
2. WHERE THE LEFT TWO LANES ARE TO BE CLOSED, VEHICLE #1 IS TO BE LOCATED COMPLETELY ON THE RIGHT SHOULDER, VEHICLE #2 STRADDLES THE LEFT SHOULDER AND THE LEFT LANE, VEHICLE #3 IS IN THE LEFT LANE, VEHICLE #4 STRADDLES THE LEFT LANE AND THE CENTER LANE, AND VEHICLE #5 IS IN THE CENTER LANE.
3. IN AREAS WHERE THERE IS LITTLE TO NO LEFT SHOULDER/MEDIAN WIDTH, VEHICLE #2 SHALL BE IN THE LEFT LANE.

NEW YORK STATE OF OPPORTUNITY. | Thruway Authority

U.S. CUSTOMARY STANDARD SHEET

MOBILE LANE CLOSURE
NARROW SHOULDER AREA
(DRAWING MLC-NS)

APPROVED MAY 1, 2019	ISSUED UNDER DB 19-001
/S/ PATRICK THOMPSON, P.E. DIRECTOR DESIGN SUPPORT SERVICES BUREAU	**TA 619-19**

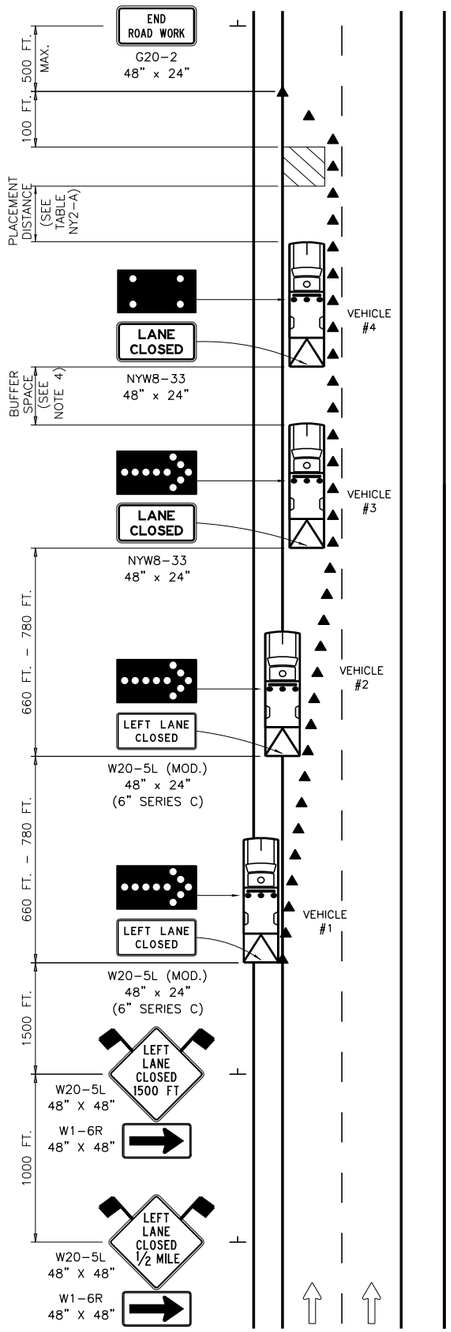

SHORT DURATION LEFT LANE CLOSURE

N.T.S.

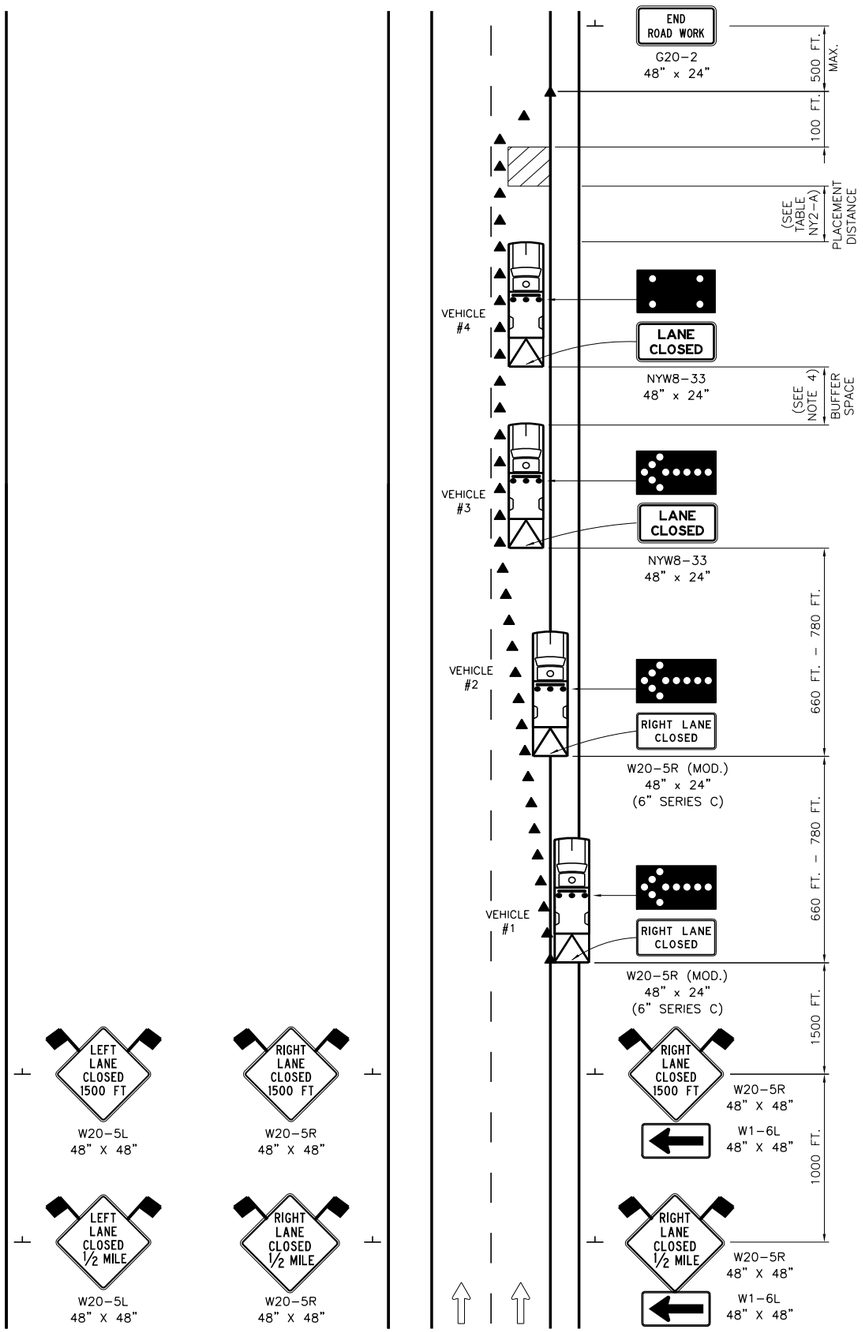

SHORT DURATION RIGHT LANE CLOSURE

N.T.S.

GENERAL NOTES:

1. USE OF THESE PLANS SHALL BE LIMITED TO A WORK SPACE LENGTH OF 1/2 MILE OR LESS AND A DAYTIME WORK DURATION OF UP TO 2 HOURS, OR NIGHTTIME WORK DURATION UP TO 1 HOUR.
2. TRAILER-MOUNTED ARROW PANELS MAY BE SUBSTITUTED FOR VEHICLES #1, #2, AND #3. TOW VEHICLES SHALL NOT REMAIN ATTACHED TO TRAILER-MOUNTED ARROW PANELS.
3. FOR VEHICLE #1, THE ATTENUATOR IS OPTIONAL FOR DAYTIME OPERATIONS. FOR NIGHTTIME OPERATIONS, ALL VEHICLES, INCLUDING VEHICLE #1 ON THE SHOULDER, SHALL BE EQUIPPED WITH AN ATTENUATOR.
4. THE MINIMUM BUFFER SPACE LENGTH SHALL BE THE PLACEMENT DISTANCE REQUIRED FOR BARRIER VEHICLES. SEE TABLE NY2-A ON NYSTA STANDARD SHEET 619-01 - WORK ZONE TRAFFIC CONTROL TABLES AND LEGEND. THE LENGTH OF THE BUFFER SPACE SHALL BE EXTENDED, AS DETERMINED BY THE ENGINEER, TO ENSURE ADEQUATE SIGHT DISTANCE FOR VEHICLES APPROACHING THE LANE CLOSURE TAPER.

LEFT LANE CLOSURE NOTES:

1. WHERE THE LEFT LANE IS TO BE CLOSED, VEHICLE #1 IS TO BE LOCATED COMPLETELY ON THE LEFT SHOULDER, VEHICLE #2 STRADDLES THE LEFT SHOULDER AND THE LEFT LANE, AND VEHICLE #3 IS IN THE LEFT LANE.
2. FOR A LEFT LANE CLOSURE IN AN AREA WHERE THE USABLE LEFT SHOULDER/MEDIAN WIDTH IS LESS THAN 6 FEET, LEFT SIDE SIGNS SHALL BE MOUNTED ON THE MEDIAN BARRIER. IF THE TOTAL MEDIAN WIDTH IS LESS THAN 6 FEET, LEFT SIDE SIGNS IN ADVANCE OF THE LANE CLOSURE TAPER AND THE "END ROAD WORK" (G20-2) SIGN SHALL NOT BE REQUIRED.
3. FOR A LEFT LANE CLOSURE IN AN AREA WHERE THE USABLE LEFT SHOULDER/MEDIAN WIDTH IS LESS THAN 8 FEET, VEHICLE #1 IS AS FAR LEFT ON THE LEFT SHOULDER AS CONDITIONS PERMIT, VEHICLE #2 STRADDLES THE LEFT SHOULDER AND THE LEFT LANE, AND VEHICLE #3 IS IN THE LEFT LANE.
4. IN AREAS WHERE THERE IS LITTLE TO NO LEFT SHOULDER/MEDIAN WIDTH, VEHICLE #1 AND VEHICLE #2 SHALL BE IN THE LEFT LANE. FOR THESE SITUTATIONS, CONSULT THE ENGINEER FOR APPROPRIATE TEMPORARY TRAFFIC CONTROL UPGRADES.

RIGHT LANE CLOSURE NOTES:

1. WHERE THE RIGHT LANE IS TO BE CLOSED, VEHICLE #1 IS TO BE LOCATED COMPLETELY ON THE RIGHT SHOULDER, VEHICLE #2 STRADDLES THE RIGHT SHOULDER AND THE RIGHT LANE, AND VEHICLE #3 IS IN THE RIGHT LANE.
2. FOR A RIGHT LANE CLOSURE IN AN AREA WHERE THE USABLE LEFT SHOULDER/MEDIAN WIDTH IS LESS THAN 6 FEET, LEFT SIDE SIGNS SHALL BE MOUNTED ON THE MEDIAN BARRIER. IF THE TOTAL MEDIAN WIDTH IS LESS THAN 6 FEET, LEFT SIDE SIGNS SHALL NOT BE REQUIRED.

LEGEND

▲ TALL TRAFFIC CONES @ 40 FT. SPACING ON TAPER AND TANGENT

NEW YORK STATE OF OPPORTUNITY. Thruway Authority

U.S. CUSTOMARY STANDARD SHEET

SHORT DURATION LANE CLOSURE
(DRAWING SDLC)

APPROVED MAY 1, 2019

/S/ PATRICK THOMPSON, P.E.
DIRECTOR DESIGN SUPPORT SERVICES BUREAU

ISSUED UNDER DB 19-001

TA 619-20

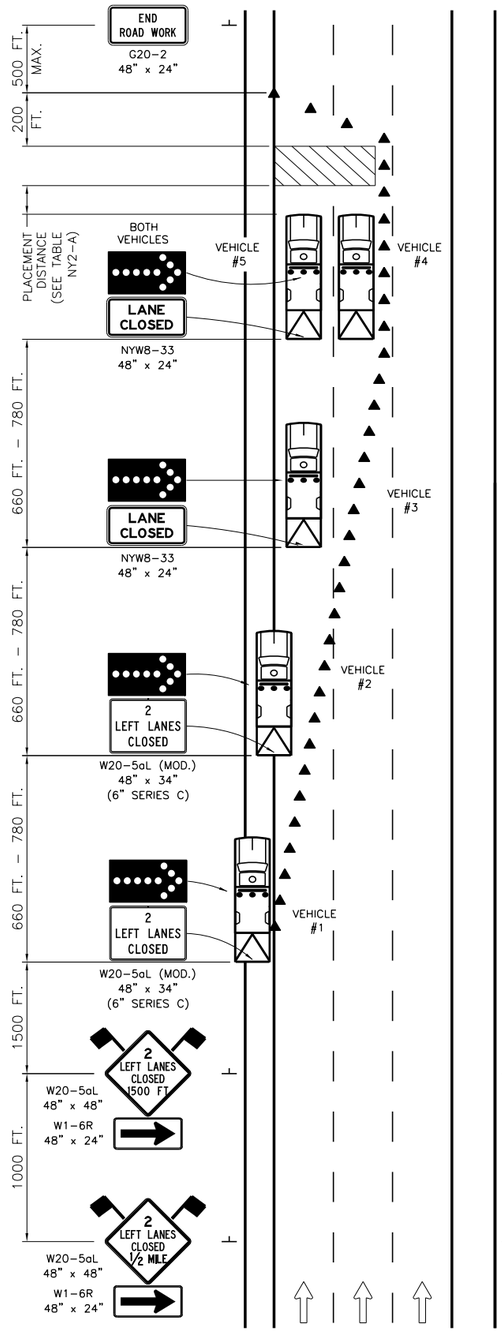

SHORT DURATION LEFT DOUBLE LANE CLOSURE

N.T.S.

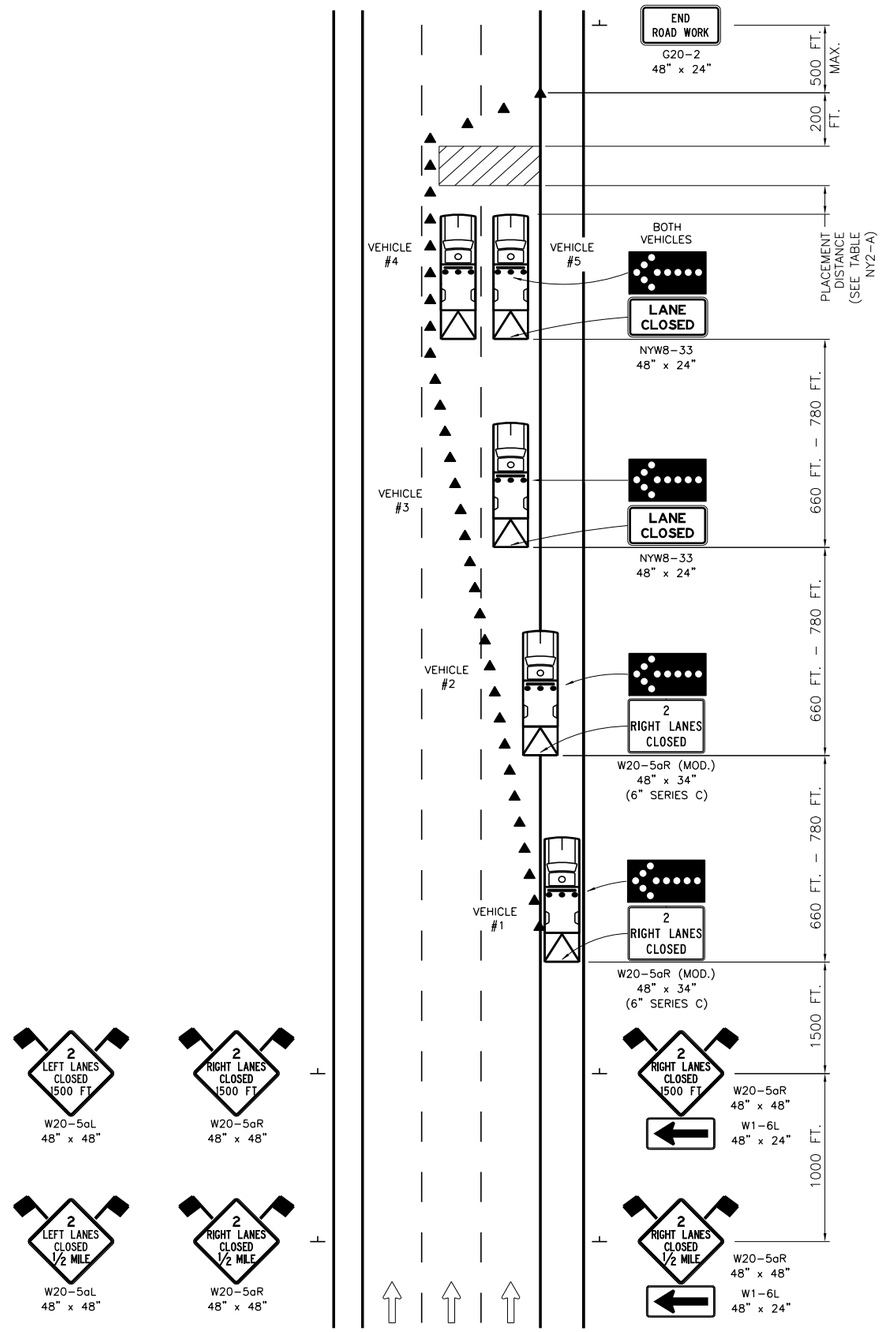

SHORT DURATION RIGHT DOUBLE LANE CLOSURE

N.T.S.

GENERAL NOTES:

1. USE OF THESE PLANS SHALL BE LIMITED TO A WORK SPACE LENGTH OF 1/2 MILE OR LESS AND A DAYTIME WORK DURATION OF UP TO 2 HOURS, OR NIGHTTIME WORK DURATION UP TO 1 HOUR.
2. TRAILER-MOUNTED ARROW PANELS MAY BE SUBSTITUTED FOR VEHICLES #1, #2, AND #3. TOW VEHICLES SHALL NOT REMAIN ATTACHED TO TRAILER-MOUNTED ARROW PANELS.
3. FOR VEHICLE #1, THE ATTENUATOR IS OPTIONAL FOR DAYTIME OPERATIONS. FOR NIGHTTIME OPERATIONS, ALL VEHICLES, INCLUDING VEHICLE #1 ON THE SHOULDER, SHALL BE EQUIPPED WITH AN ATTENUATOR.

LEFT DOUBLE LANE CLOSURE NOTES:

1. WHERE THE LEFT TWO LANES ARE TO BE CLOSED, VEHICLE #1 IS TO BE LOCATED COMPLETELY ON THE LEFT SHOULDER, VEHICLE #2 STRADDLES THE LEFT SHOULDER AND THE LEFT LANE, VEHICLE #3 IS IN THE LEFT LANE, AND VEHICLE #4 IS IN THE CENTER LANE. VEHICLE #5 IS LOCATED IN THE LEFT LANE ALONGSIDE VEHICLE #4.
2. FOR A LEFT DOUBLE LANE CLOSURE IN AN AREA WHERE THE USABLE LEFT SHOULDER/MEDIAN WIDTH IS LESS THAN 6 FEET, LEFT SIDE SIGNS SHALL BE MOUNTED ON THE MEDIAN BARRIER. IF THE TOTAL MEDIAN WIDTH IS LESS THAN 6 FEET, LEFT SIDE SIGNS IN ADVANCE OF THE LANE CLOSURE TAPER AND THE "END ROAD WORK" (G20-2) SIGN SHALL NOT BE REQUIRED.
3. FOR A LEFT DOUBLE LANE CLOSURE IN AN AREA WHERE THE USABLE LEFT SHOULDER/MEDIAN WIDTH IS LESS THAN 8 FEET, VEHICLE #1 STRADDLES THE LEFT SHOULDER AND THE LEFT LANE, VEHICLE #2 IS IN THE LEFT LANE, VEHICLE #3 STRADDLES THE LEFT LANE AND THE CENTER LANE, AND VEHICLE #4 IS IN THE CENTER LANE. VEHICLE #5 IS LOCATED IN THE LEFT LANE ALONGSIDE VEHICLE #4.
4. IN AREAS WHERE THERE IS LITTLE TO NO LEFT SHOULDER/MEDIAN WIDTH, VEHICLE #1 SHALL BE IN THE LEFT LANE. FOR THESE SITUTATIONS, CONSULT THE ENGINEER FOR APPROPRIATE TEMPORARY TRAFFIC CONTROL UPGRADES.

RIGHT DOUBLE LANE CLOSURE NOTES:

1. WHERE THE RIGHT TWO LANES ARE TO BE CLOSED, VEHICLE #1 IS TO BE LOCATED COMPLETELY ON THE RIGHT SHOULDER, VEHICLE #2 STRADDLES THE RIGHT SHOULDER AND THE RIGHT LANE, VEHICLE #3 IS IN THE RIGHT LANE, AND VEHICLE #4 IS IN THE CENTER LANE. VEHICLE #5 IS LOCATED IN THE RIGHT LANE ALONGSIDE VEHICLE #4.
2. FOR A RIGHT DOUBLE LANE CLOSURE IN AN AREA WHERE THE USABLE LEFT SHOULDER/MEDIAN WIDTH IS LESS THAN 6 FEET, LEFT SIDE SIGNS SHALL BE MOUNTED ON THE MEDIAN BARRIER. IF THE TOTAL MEDIAN WIDTH IS LESS THAN 6 FEET, LEFT SIDE SIGNS SHALL NOT BE REQUIRED.

LEGEND

▲ TALL TRAFFIC CONES @ 40 FT. SPACING ON TAPER AND TANGENT

NEW YORK STATE OF OPPORTUNITY. Thruway Authority

U.S. CUSTOMARY STANDARD SHEET

SHORT DURATION DOUBLE LANE CLOSURE (DRAWING SDDLC)

APPROVED MAY 1, 2019

/S/ PATRICK THOMPSON, P.E.
DIRECTOR DESIGN SUPPORT SERVICES BUREAU

ISSUED UNDER DB 19-001

TA 619-21

TRAFFIC CONTROL GUIDE FOR PAVEMENT STRIPING OPERATIONS		THRUWAY MAINLINE		
		TWO LANE SECTION	THREE LANE SECTION	FOUR LANE SECTION
STRIPING OPERATION	LEFT EDGE LINE ONLY	STANDARD SHEET TA 619-22 (DRAWING MLC-PS) STRIPING OPERATION (LEFT EDGE LINE ONLY)	STANDARD SHEET TA 619-22 (DRAWING MLC-PS) STRIPING OPERATION (LEFT EDGE LINE ONLY)	STANDARD SHEET TA 619-22 (DRAWING MLC-PS) STRIPING OPERATION (LEFT EDGE LINE ONLY)
	LEFT EDGE LINE WITH LEFT SKIP LINE	STANDARD SHEET TA 619-22 (DRAWING MLC-PS) STRIPING OPERATION LEFT LANE CLOSURE	STANDARD SHEET TA 619-22 (DRAWING MLC-PS) STRIPING OPERATION LEFT LANE CLOSURE	STANDARD SHEET TA 619-22 (DRAWING MLC-PS) STRIPING OPERATION LEFT LANE CLOSURE
	LEFT SKIP LINE ONLY	STANDARD SHEET TA 619-22 (DRAWING MLC-PS) STRIPING OPERATION LEFT LANE CLOSURE	STANDARD SHEET TA 619-22 (DRAWING MLC-PS) STRIPING OPERATION LEFT LANE CLOSURE	STANDARD SHEET TA 619-22 (DRAWING MLC-PS) STRIPING OPERATION LEFT LANE CLOSURE
	CENTER SKIP LINE	—	—	STANDARD SHEET TA 619-22 (DRAWING MLC-PS) STRIPING OPERATION LEFT DOUBLE LANE CLOSURE
	RIGHT SKIP LINE ONLY	—	STANDARD SHEET TA 619-22 (DRAWING MLC-PS) STRIPING OPERATION LEFT DOUBLE LANE CLOSURE	STANDARD SHEET TA 619-22 (DRAWING MLC-PS) STRIPING OPERATION RIGHT LANE CLOSURE STANDARD SHEET TA 619-15 (DRAWING INT) TYPICAL DECELERATION AND ACCELERATION LANES
	RIGHT EDGE LINE	STANDARD SHEET TA 619-22 (DRAWING MLC-PS) STRIPING OPERATION (RIGHT EDGE LINE ONLY)	STANDARD SHEET TA 619-22 (DRAWING MLC-PS) STRIPING OPERATION (RIGHT EDGE LINE ONLY)	STANDARD SHEET TA 619-22 (DRAWING MLC-PS) STRIPING OPERATION (RIGHT EDGE LINE ONLY)
	RIGHT EDGE LINE AT DECELERATION AND ACCELERATION LANES EDGE LINES AT EXIT AND ENTRANCE RAMPS	STANDARD SHEET TA 619-22 (DRAWING MLC-PS) STRIPING OPERATION (RIGHT EDGE LINE ONLY) STANDARD SHEET TA 619-24 (DRAWING INT-PS)	STANDARD SHEET TA 619-22 (DRAWING MLC-PS) STRIPING OPERATION (RIGHT EDGE LINE ONLY) STANDARD SHEET TA 619-24 (DRAWING INT-PS)	STANDARD SHEET TA 619-22 (DRAWING MLC-PS) STRIPING OPERATION (RIGHT EDGE LINE ONLY) STANDARD SHEET TA 619-24 (DRAWING INT-PS)
	GORES	STANDARD SHEET TA 619-15 (DRAWING INT) TYPICAL ACCELERATION AND DECELERATION LANES STANDARD SHEET TA 619-07 OR STANDARD SHEET 619-11 (DRAWING SLC-XY))	STANDARD SHEET TA 619-15 (DRAWING INT) TYPICAL ACCELERATION AND DECELERATION LANES STANDARD SHEET TA 619-07 OR STANDARD SHEET 619-11 (DRAWING SLC-XY)	STANDARD SHEET TA 619-15 (DRAWING INT) TYPICAL ACCELERATION AND DECELERATION LANES STANDARD SHEET TA 619-07 OR STANDARD SHEET 619-11 (DRAWING SLC-XY)

NOTES:

1. THE TABLE SHOWN IS INTENDED TO BE A GUIDE IN SELECTING THE APPROPRIATE WORK ZONE TRAFFIC CONTROL PLAN FOR PAVEMENT STRIPING OPERATIONS.
2. THE FOLLOWING STANDARD TRAFFIC CONTROL DRAWINGS ARE REFERENCED IN THE TABLE:

   MLC-PS – MOBILE LANE CLOSURE FOR PAVEMENT STRIPING OPERATIONS

   INT-PS – WORK ZONE TRAFFIC CONTROL FOR PAVEMENT STRIPING OPERATIONS AT INTERCHANGES, SERVICE AREAS, AND PARKING AREAS

   INT – WORK ZONE TRAFFIC CONTROL AT INTERCHANGES, SERVICE AREAS, AND PARKING AREAS

   SLC – SINGLE LANE CLOSURE (SHORT- OR INTERMEDIATE-TERM STATIONARY)
3. DRAWINGS REFERENCED ON THIS SHEET THAT HAVE NOT BEEN INCLUDED IN THE CONTRACT ARE NOT APPLICABLE.

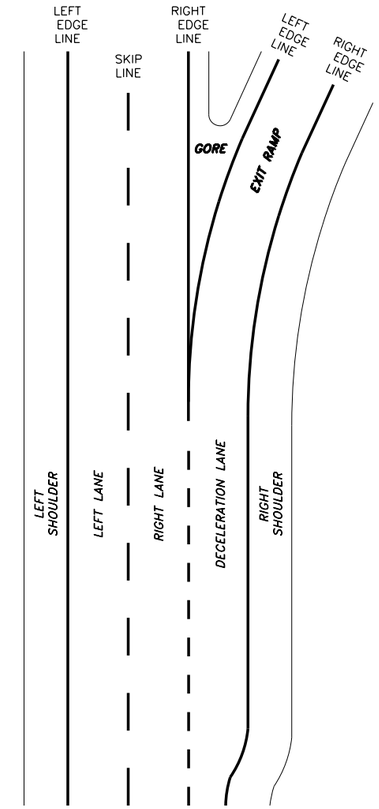

SCHEMATIC
DECELERATION LANE
AND EXIT RAMP
N.T.S.

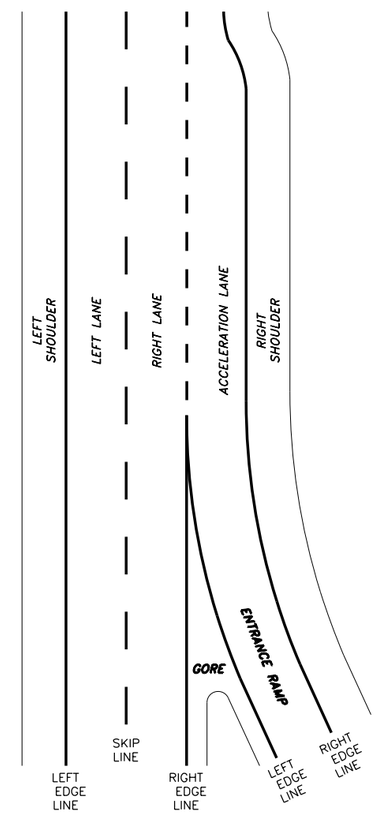

SCHEMATIC
ACCELERATION LANE
AND ENTRANCE RAMP
N.T.S.

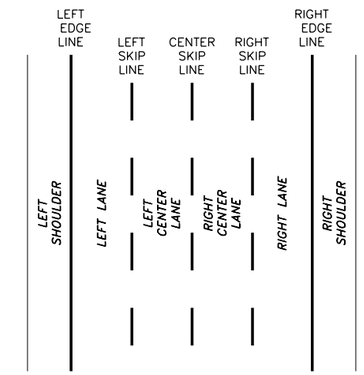

SCHEMATIC
FOUR LANE SECTION
N.T.S.

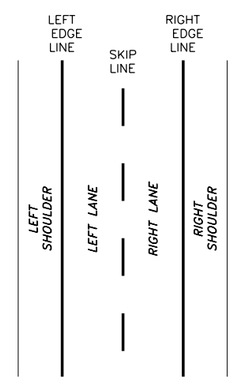

SCHEMATIC
TWO LANE SECTION
N.T.S.

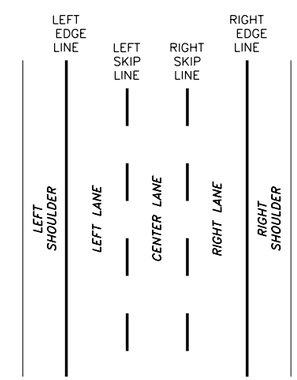

SCHEMATIC
THREE LANE SECTION
N.T.S.

NEW YORK STATE OF OPPORTUNITY. Thruway Authority

U.S. CUSTOMARY STANDARD SHEET

WORK ZONE TRAFFIC CONTROL GUIDE FOR PAVEMENT STRIPING OPERERATIONS (DRAWING PM-G)

APPROVED MAY 1, 2019

/S/ PATRICK THOMPSON, P.E.
DIRECTOR DESIGN SUPPORT SERVICES BUREAU

ISSUED UNDER DB 19-001

TA 619-22

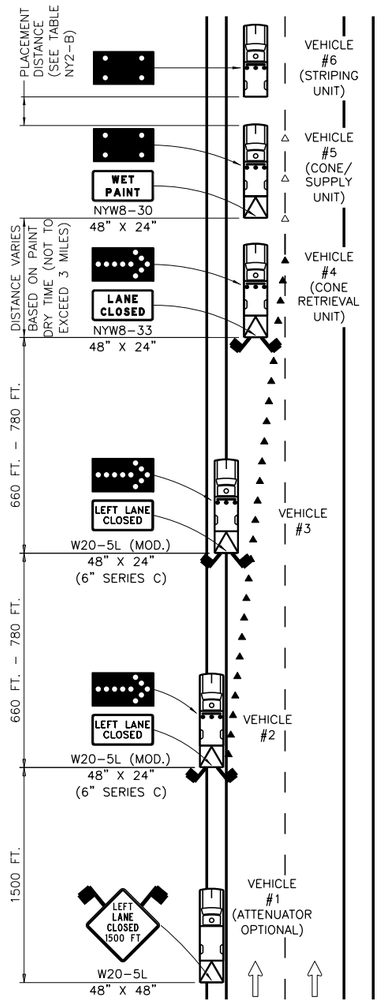

STRIPING OPERATION
LEFT LANE CLOSURE

N.T.S.

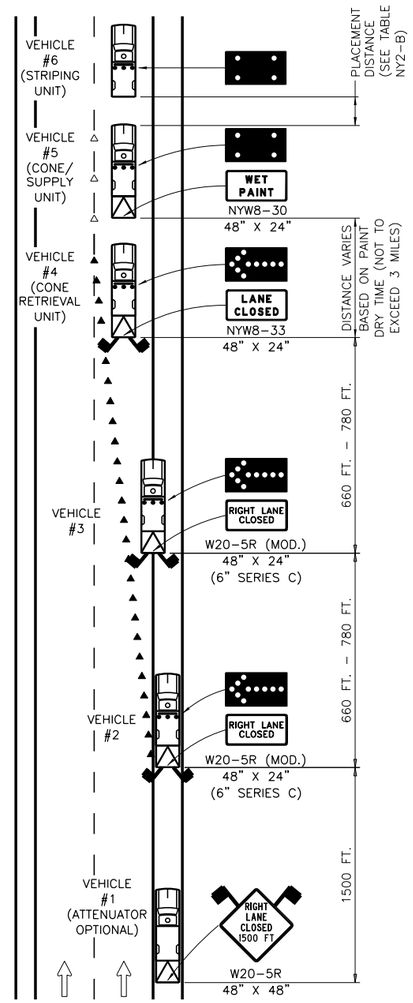

STRIPING OPERATION
RIGHT LANE CLOSURE

N.T.S.

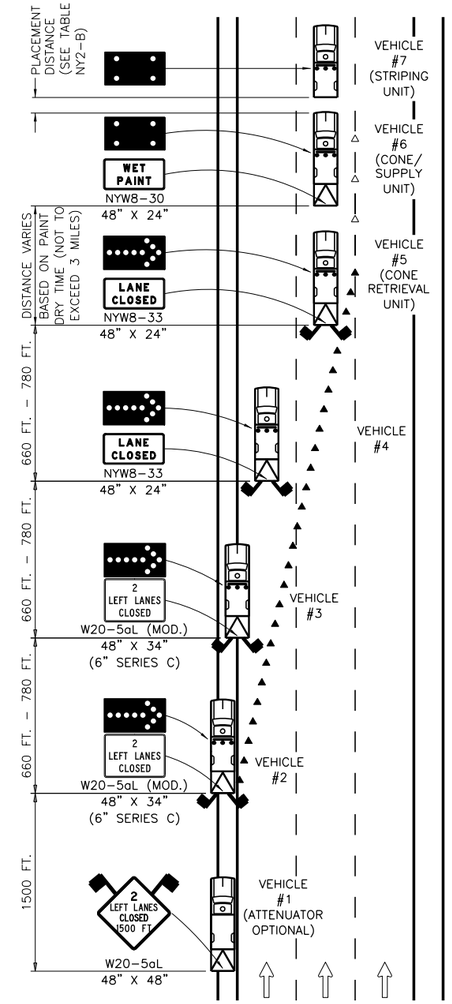

STRIPING OPERATION
LEFT DOUBLE LANE CLOSURE

N.T.S.

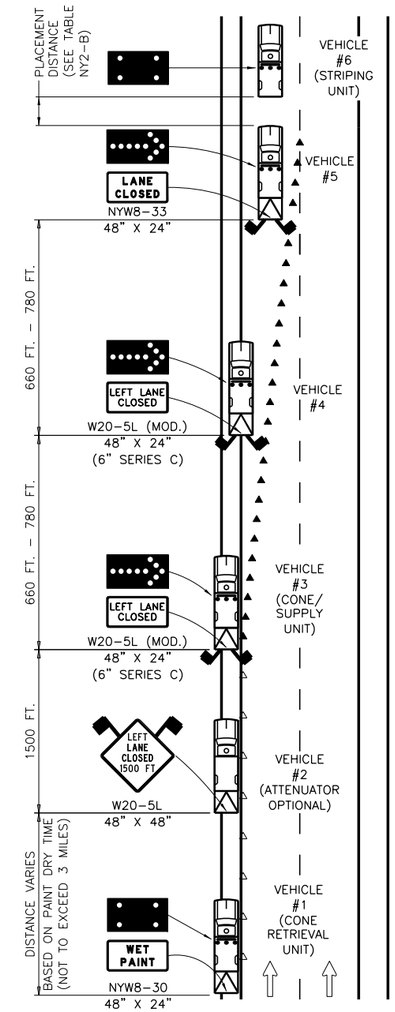

STRIPING OPERATION
(LEFT EDGE LINE ONLY)

N.T.S.

NOTES:

1. THESE PLANS ARE TO BE UTILIZED ONLY WHEN AUTHORIZED BY THE ENGINEER.
2. WHERE THE LEFT LANE IS TO BE CLOSED, VEHICLE #1 AND VEHICLE #2 ARE TO BE LOCATED COMPLETELY ON THE LEFT SHOULDER, VEHICLE #3 STRADDLES THE LEFT SHOULDER AND THE LEFT LANE, AND VEHICLES #4, #5, AND #6 ARE IN THE LEFT LANE.
3. WHERE THE RIGHT LANE IS TO BE CLOSED, VEHICLE #1 AND VEHICLE #2 ARE TO BE LOCATED COMPLETELY ON THE RIGHT SHOULDER, VEHICLE #3 STRADDLES THE RIGHT SHOULDER AND THE RIGHT LANE, AND VEHICLES #4, #5, AND #6 ARE IN THE RIGHT LANE.
4. WHERE THE LEFT TWO LANES ARE TO BE CLOSED, VEHICLE #1 AND VEHICLE #2 ARE TO BE LOCATED COMPLETELY ON THE LEFT SHOULDER, VEHICLE #3 STRADDLES THE LEFT SHOULDER AND THE LEFT LANE, VEHICLE #4 IS IN THE LEFT LANE, AND VEHICLES #5, #6, AND #7 ARE IN THE CENTER LANE.
5. WHERE THE LEFT LANE IS TO BE CLOSED FOR STRIPING THE LEFT EDGE LINE ONLY, VEHICLES #1, #2, AND #3 ARE TO BE LOCATED COMPLETELY ON THE LEFT SHOULDER, VEHICLE #4 STRADDLES THE LEFT SHOULDER AND THE LEFT LANE, AND VEHICLES #5 AND #6 ARE IN THE LEFT LANE.
6. THE STRIPING OPERATION (RIGHT EDGE LINE ONLY) PLAN SHALL BE THE MIRROR IMAGE OF THE STRIPING OPERATION (LEFT EDGE LINE ONLY) PLAN. SUBSTITUTE "RIGHT LANE CLOSED 1500 FT" (W20-5R) SIGN FOR THE "LEFT LANE CLOSED 1500 FT" (W20-5L) SIGN.
7. IF THE CONE/SUPPLY VEHICLE IS NOT EQUIPPED WITH AN ATTENUATOR AND ARROW PANEL, A SHADOW VEHICLE SHALL BE ADDED TO THE PLAN AND BE PLACED BEHIND THE CONE/SUPPLY VEHICLE IN ACCORDANCE WITH TABLE NY2-B ON NYSTA STANDARD SHEET 619-01 - WORK ZONE TRAFFIC CONTROL TABLES AND LEGEND.
8. FOR VEHICLE #1 (VEHICLE #2 FOR "EDGE LINE ONLY" PLAN), A TRUCK-MOUNTED OR TRAILER-MOUNTED PORTABLE VARIABLE MESSAGE SIGN (PVMS) MAY BE USED IN LIEU OF THE SIGN SHOWN. THE PVMS UNIT SHALL BE COMPLETELY ON THE SHOULDER AND SHALL HAVE NO PORTION PROTRUDE OVER THE TRAVEL LANE AT ANY TIME. THE MESSAGE DISPLAYED SHALL BE THE SAME AS THAT SHOWN.
9. IN AREAS WHERE THE WIDTH OF THE LEFT SHOULDER/MEDIAN PREVENTS THE PLACEMENT OF VEHICLES #1 AND #2 (VEHICLES #1, #2, AND #3 FOR 'LEFT EDGE LINE ONLY' PLAN) COMPLETELY ON THE SHOULDER, THE NYSTA STANDARD SHEET 619-23 - MOBILE LANE CLOSURE FOR PAVEMENT STRIPING OPERATIONS (NARROW SHOULDER AREA) SHALL BE USED IN LIEU OF THIS PLAN.

LEGEND

△ TRAFFIC CONES @ 80 FT. SPACING PLACED ADJACENT TO WET PAINT STRIPE AND REMOVED SUBSEQUENT TO DRYING.

▲ TRAFFIC CONES @ 40 FT. SPACING WHEN MOBILE OPERATIONS BECOME TEMPORARILY STATIONARY FOR PERIODS LONGER THAN 15 (FIFTEEN) MINUTES IN DURATION. TRAFFIC CONES ARE TO BE REMOVED UPON RESUMPTION OF MOBILE OPERATION.

NEW YORK STATE OF OPPORTUNITY. Thruway Authority

U.S. CUSTOMARY STANDARD SHEET

MOBILE LANE CLOSURE FOR PAVEMENT STRIPING OPERATIONS (DRAWING MLC-PS)

APPROVED MAY 1, 2019

/S/ PATRICK THOMPSON, P.E.
DIRECTOR DESIGN SUPPORT SERVICES BUREAU

ISSUED UNDER DB 19-001

TA 619-23

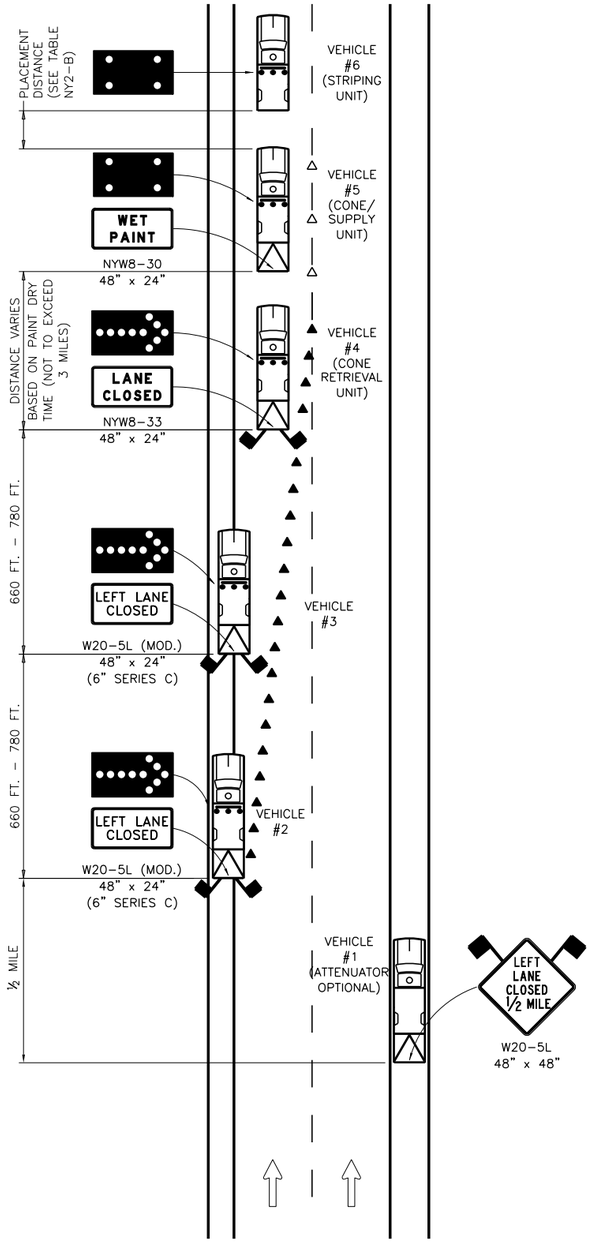

STRIPING OPERATION – SINGLE LANE CLOSURE
IN NARROW SHOULDER AREA

N.T.S.

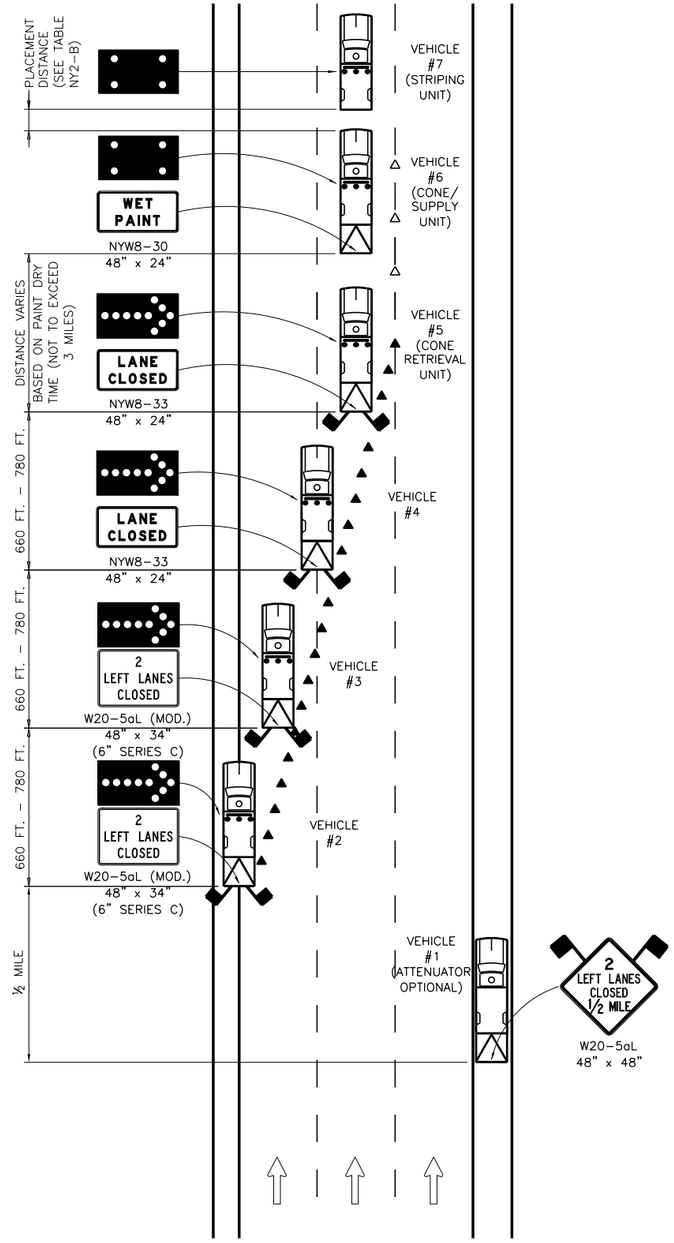

STRIPING OPERATION – DOUBLE LANE CLOSURE
IN NARROW SHOULDER AREA

N.T.S.

GENERAL NOTES:

1. THESE PLANS ARE TO BE UTILIZED ONLY WHEN AUTHORIZED BY THE ENGINEER.
2. IF THE CONE/SUPPLY VEHICLE IS NOT EQUIPPED WITH AN ATTENUATOR AND ARROW PANEL, A SHADOW VEHICLE SHALL BE ADDED TO THE PLAN AND BE PLACED BEHIND THE CONE/SUPPLY VEHICLE IN ACCORDANCE WITH TABLE NY2-B ON NYSTA STANDARD SHEET 619-01 – WORK ZONE TRAFFIC CONTROL TABLES AND LEGEND.
3. FOR VEHICLE #1, A TRUCK-MOUNTED OR TRAILER-MOUNTED PORTABLE VARIABLE MESSAGE SIGN (PVMS) MAY BE USED IN LIEU OF THE SIGN SHOWN. THE PVMS UNIT SHALL BE COMPLETELY ON THE SHOULDER AND SHALL HAVE NO PORTION PROTRUDE OVER THE TRAVEL LANE AT ANY TIME. THE MESSAGE DISPLAYED SHALL BE THE SAME AS THAT SHOWN.

SINGLE LANE CLOSURE NOTES:

1. THE PLAN SHOWN IS FOR A STRIPING OPERATION INVOLVING A LEFT SINGLE LANE CLOSURE IN AN AREA WHERE THE USABLE LEFT SHOULDER/MEDIAN WIDTH IS LESS THAN 8 FEET.
2. WHERE THE LEFT LANE IS TO BE CLOSED, VEHICLE #1 IS TO BE LOCATED COMPLETELY ON THE RIGHT SHOULDER, VEHICLE #2 IS AS FAR LEFT ON THE LEFT SHOULDER AS CONDITIONS PERMIT, VEHICLE #3 STRADDLES THE LEFT SHOULDER AND THE LEFT LANE, AND VEHICLES #4, #5, AND #6 ARE IN THE LEFT LANE.
3. IN AREAS WHERE THERE IS LITTLE TO NO LEFT SHOULDER/MEDIAN WIDTH, VEHICLE #2 AND VEHICLE #3 SHALL BE IN THE LEFT LANE.

DOUBLE LANE CLOSURE NOTES:

1. THE PLAN SHOWN IS FOR A STRIPING OPERATION INVOLVING A LEFT DOUBLE LANE CLOSURE IN AN AREA WHERE THE USABLE LEFT SHOULDER/MEDIAN WIDTH IS LESS THAN 8 FEET.
2. WHERE THE LEFT TWO LANES ARE TO BE CLOSED, VEHICLE #1 IS TO BE LOCATED COMPLETELY ON THE RIGHT SHOULDER, VEHICLE #2 STRADDLES THE LEFT SHOULDER AND THE LEFT LANE, VEHICLE #3 IS IN THE LEFT LANE, VEHICLE #4 STRADDLES THE LEFT LANE AND THE CENTER LANE, AND VEHICLES #5, #6, AND #7 ARE IN THE CENTER LANE.
3. IN AREAS WHERE THERE IS LITTLE TO NO LEFT SHOULDER/MEDIAN WIDTH, VEHICLE #2 SHALL BE IN THE LEFT LANE.

LEGEND

△ TRAFFIC CONES @ 80 FT. SPACING PLACED ADJACENT TO WET PAINT STRIPE AND REMOVED SUBSEQUENT TO DRYING.

▲ TRAFFIC CONES @ 40 FT. SPACING WHEN MOBILE OPERATIONS BECOME TEMPORARILY STATIONARY FOR PERIODS LONGER THAN 15 (FIFTEEN) MINUTES IN DURATION. TRAFFIC CONES ARE TO BE REMOVED UPON RESUMPTION OF MOBILE OPERATION.

NEW YORK STATE OF OPPORTUNITY. Thruway Authority

U.S. CUSTOMARY STANDARD SHEET

MOBILE LANE CLOSURE FOR
PAVEMENT STRIPING OPERATIONS
--NARROW SHOULDER AREA--
(DRAWING MLC-PS-NS)

APPROVED MAY 1, 2019

/S/ PATRICK THOMPSON, P.E.
DIRECTOR DESIGN SUPPORT
SERVICES BUREAU

ISSUED UNDER DB 19-001

TA 619-24

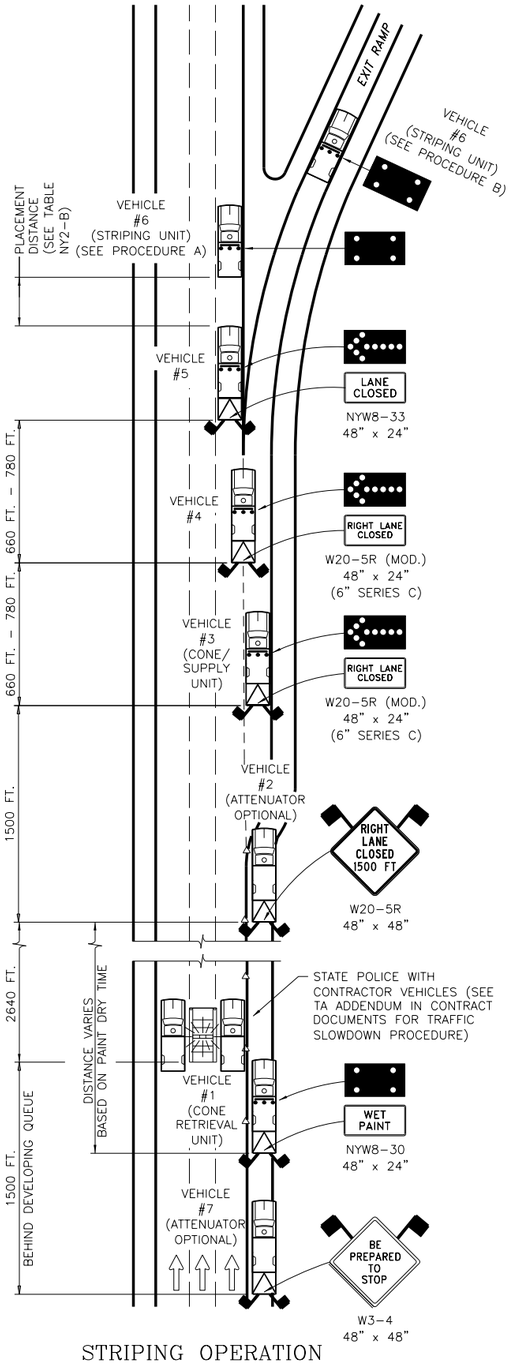

STRIPING OPERATION
TYPICAL DECELERATION LANE

N.T.S.

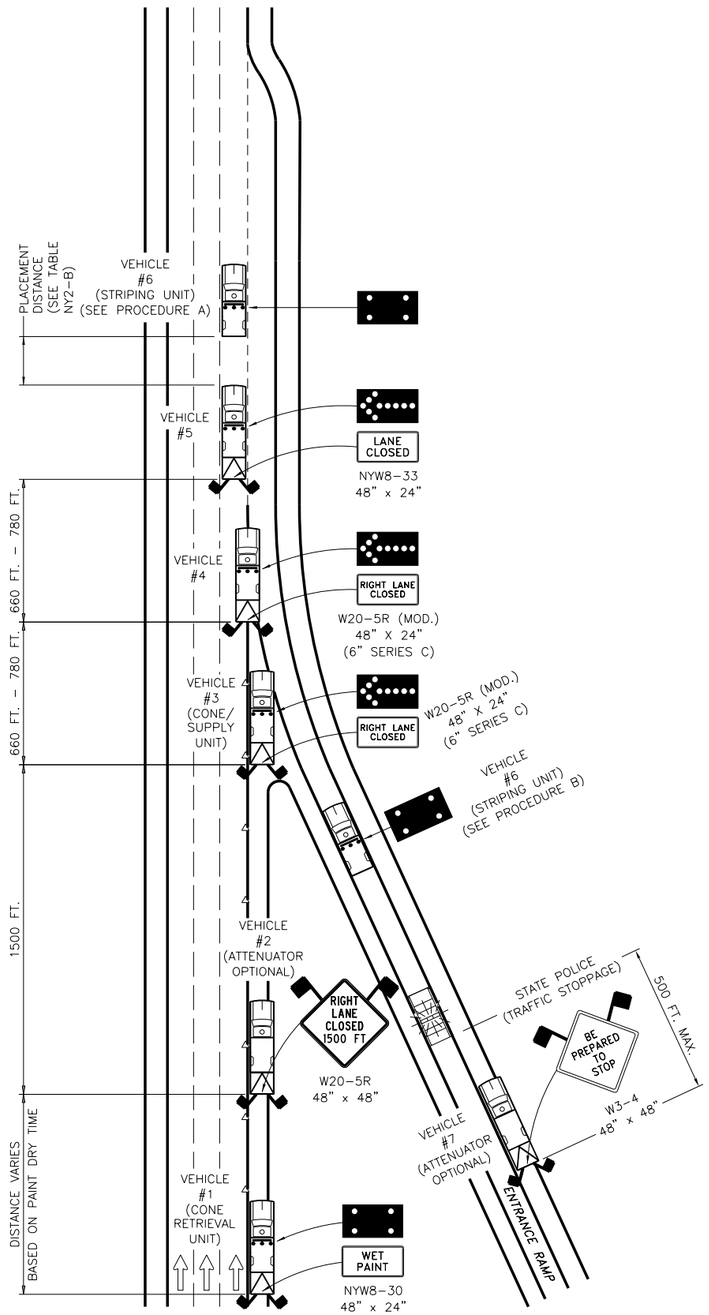

STRIPING OPERATION
TYPICAL ACCELERATION LANE

N.T.S.

PROCEDURE A:

MAINLINE (RIGHT EDGE) STRIPING AT DECELERATION AND ACCELERATION LANES

1. APPROACH THE DECELERATION LANE USING NYSTA STANDARD SHEET 619-22 – MOBILE LANE CLOSURE FOR PAVEMENT STRIPING OPERATIONS (RIGHT EDGE LINE ONLY).
2. WHEN THE STRIPING UNIT, VEHICLE #6, REACHES THE BEGINNING OF THE DECELERATION LANE, ALL UNITS SHALL COME TO A COMPLETE STOP UNTIL THE STATE POLICE IMPLEMENT THE ROLLING BLOCK BARRICADE.
3. WHEN ALL TRAFFIC HAS CLEARED BETWEEN THE STATE POLICE AND THE STRIPING UNIT, VEHICLES #3, #4, #5, AND #6 MAY THEN PROCEED ACROSS THE DECELERATION LANE AND STRIPE THE DOTTED LANE LINE AT THE EXIT RAMP AND THE MAINLINE SIDE OF THE GORE. THE STRIPING OPERATION MAY THEN CONTINUE ALONG THE RIGHT EDGE LINE.
4. WHEN VEHICLES #3, #4, #5, AND #6 ARE COMPLETELY ACROSS THE DECELERATION LANE AND EXIT RAMP, THE STATE POLICE SHALL RELEASE TRAFFIC AND, ALONG WITH VEHICLE #7, PROCEED TO THE BEGINNING OF THE ENTRANCE RAMP WHERE TRAFFIC SHALL BE STOPPED.
5. WHEN VEHICLE #6 REACHES THE GORE OF THE ACCELERATION LANE, ALL UNITS SHALL COME TO A COMPLETE STOP UNTIL ALL ENTRANCE RAMP TRAFFIC HAS CLEARED IN FRONT OF THE STATE POLICE. VEHICLES #3, #4, #5, AND #6 MAY THEN STRIPE THE MAINLINE SIDE OF THE GORE AND THE DOTTED LANE LINE AT THE ENTRANCE RAMP.
6. WHEN VEHICLES #3, #4, #5, AND #6 ARE COMPLETELY ACROSS THE ACCELERATION LANE, THE STATE POLICE SHALL RELEASE TRAFFIC.
7. STRIPING OPERATIONS SHALL THEN RESUME ALONG THE RIGHT EDGE LINE UNTIL THE NEXT INTERCHANGE, SERVICE AREA, OR PARKING AREA IS REACHED. THE ABOVE PROCEDURE SHALL THEN BE REPEATED.

PROCEDURE B:

RIGHT AND LEFT EDGE LINE STRIPING ON EXIT AND ENTRANCE RAMPS

1. APPROACH THE DECELERATION LANE USING NYSTA STANDARD SHEET 619-22 – MOBILE LANE CLOSURE FOR PAVEMENT STRIPING OPERATIONS (RIGHT EDGE LINE ONLY).
2. WHEN THE STRIPING UNIT, VEHICLE #6, REACHES THE BEGINNING OF THE DECELERATION LANE, ALL UNITS SHALL COME TO A COMPLETE STOP UNTIL THE STATE POLICE IMPLEMENT THE ROLLING BLOCK BARRICADE.
3. WHEN ALL TRAFFIC HAS CLEARED BETWEEN THE STATE POLICE AND THE STRIPING UNIT, VEHICLE #6 SHALL PROCEED ALONG THE DECELERATION LANE AND EXIT RAMP WHILE STRIPING THE RIGHT AND/OR LEFT EDGE LINES. UPON COMPLETION OF THE DECELERATION LANE AND EXIT RAMP STRIPING, VEHICLE #6 SHALL PROCEED TO THE BEGINNING OF ENTRANCE RAMP AND PARK ON THE RIGHT SHOULDER. VEHICLES #3, #4, AND #5 SHALL PROCEED ACROSS THE DECELERATION LANE AND EXIT RAMP TO THE GORE OF THE ACCELERATION LANE AND COME TO A COMPLETE STOP.
4. THE STATE POLICE SHALL THEN RELEASE TRAFFIC AND, ALONG WITH VEHICLE #7, PROCEED TO THE BEGINNING OF THE ENTRANCE RAMP AND PARK BEHIND VEHICLE #6 ON THE RIGHT SHOULDER.
5. THE STATE POLICE SHALL THEN STOP TRAFFIC FROM ENTERING THE RAMP, AND VEHICLE #6 SHALL PROCEED TO STRIPE THE RIGHT AND/OR LEFT EDGE LINES ON THE ENTRANCE RAMP AND ACCELERATION LANE.
6. UPON COMPLETION OF THE ENTRANCE RAMP AND ACCELERATION LANE STRIPING, VEHICLES #3, #4, #5, AND #6 SHALL CLOSE THE RIGHT LANE AND PROCEED PAST THE ACCELERATION LANE. AT THIS TIME, THE STATE POLICE SHALL RELEASE TRAFFIC ON THE RAMP.

GENERAL NOTES:

1. THESE PLANS ARE TO BE UTILIZED ONLY WHEN AUTHORIZED BY THE ENGINEER.
2. THIS SHEET SHALL BE USED IN CONJUNCTION WITH THE DETAILS AND NOTES FOUND ON NYSTA STANDARD SHEET 619-22 – MOBILE LANE CLOSURE FOR PAVEMENT STRIPING OPERATIONS.
3. THE CONTRACTOR SHALL PROVIDE ALL VEHICLES AND SIGNS SHOWN. STATE POLICE ASSISTANCE IS REQUIRED FOR THE EXECUTION OF THE ROLLING BLOCK BARRICADE.
4. THE PROCEDURE FOR ESTABLISHING A TRAFFIC SLOWDOWN CAN BE FOUND IN THE TA ADDENDUM IN THE CONTRACT DOCUMENTS.
5. VEHICLE #2 SHALL MAINTAIN ITS DISTANCE FROM VEHICLE #3 AT ALL TIMES WITHOUT BLOCKING THE RAMPS.

LEGEND

△ TRAFFIC CONES @ 80 FT. SPACING PLACED ADJACENT TO WET PAINT STRIPE AND REMOVED SUBSEQUENT TO DRYING.

NEW YORK STATE OF OPPORTUNITY. Thruway Authority

U.S. CUSTOMARY STANDARD SHEET

WORK ZONE TRAFFIC CONTROL FOR PAVEMENT STRIPING OPERATIONS AT INTERCHANGES, SERVICE AREAS, AND PARKING AREAS (DRAWING INT-PS)

APPROVED MAY 1, 2019	ISSUED UNDER DB 19-001
/S/ PATRICK THOMPSON, P.E. DIRECTOR DESIGN SUPPORT SERVICES BUREAU	**TA 619-25**

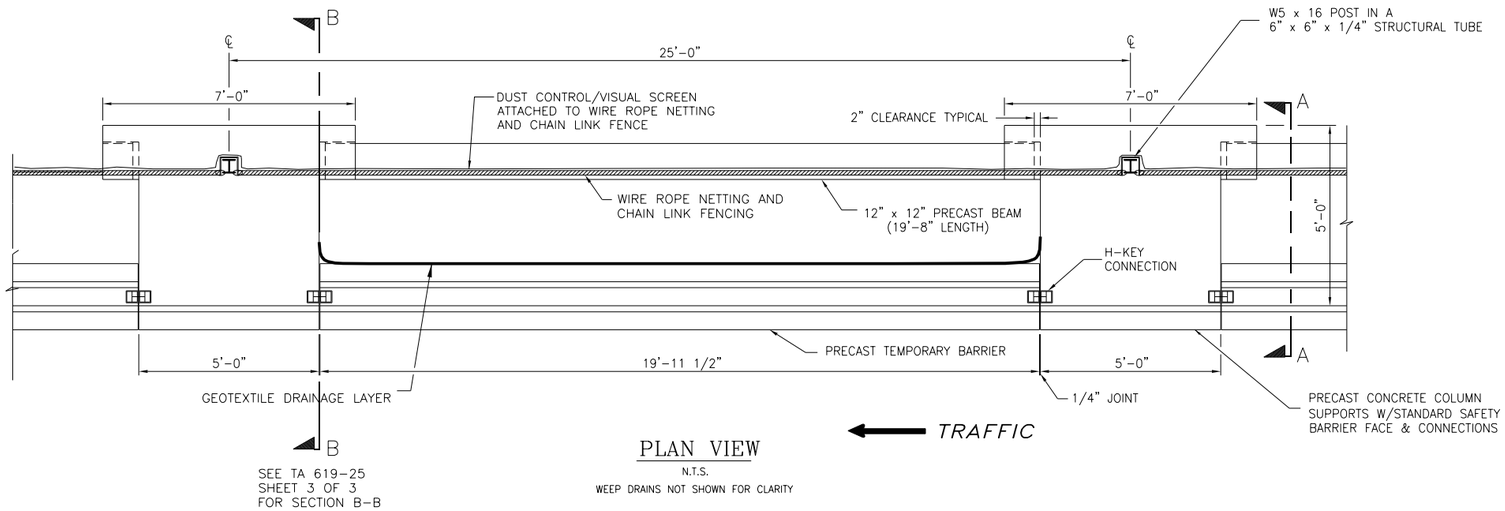

PLAN VIEW

N.T.S.

WEEP DRAINS NOT SHOWN FOR CLARITY

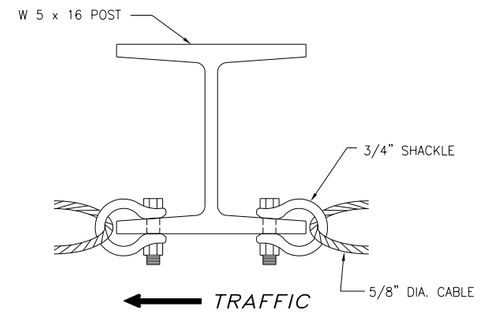

SHACKLE CONNECTION

N.T.S.

NOTES;

1. ALL DIMENSIONS ARE SHOWN IN INCHES UNLESS OTHERWISE NOTED.
2. PRECAST UNITS SHALL NOT BE MORTARED OR PINNED IN PLACE.
3. ALL COMPONENTS OF THE TEMPORARY ROCK CATCHMENTBARRIER, INCLUDING BUT NOT LIMITED TO, PRECAST TEMPORARY BARRIER, PRECAST COLUMN SUPPORT ANCHOR BLOCK, PRECAST BEAMS, STEEL COLUMN, WIRE ROPE NET, CHAIN LINK FENCE, DUST CONTROL/VISUAL SCREEN, WIRE ROPE, WEEP DRAINS, GEOTEXTILE, CONNECTING HARDWARE, ETC. SHALL BE FURNISHED AND INSTALLED UNDER ITEM 619.172500 25.
4. DUST CONTROL/VISUAL SCREEN SHALL MEET THE REQUIREMENTS OF GEOTEXTILE DRAINAGE SECTION 737-01.

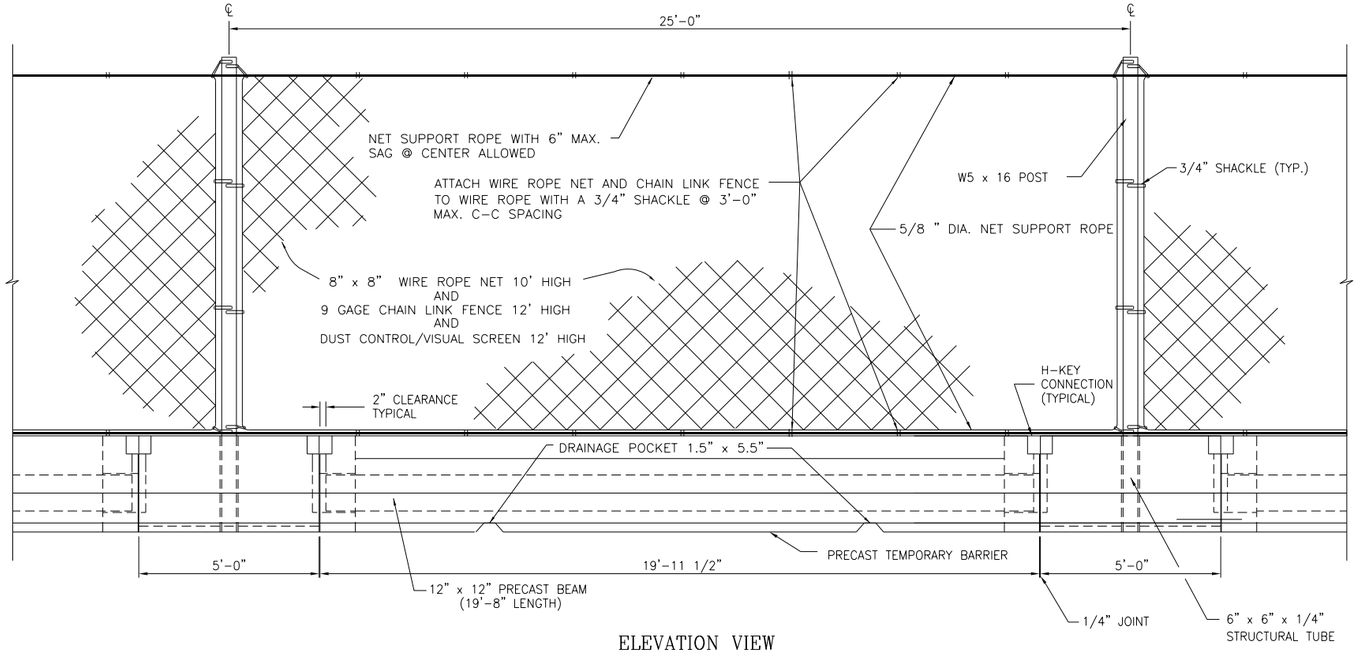

ELEVATION VIEW

N.T.S.

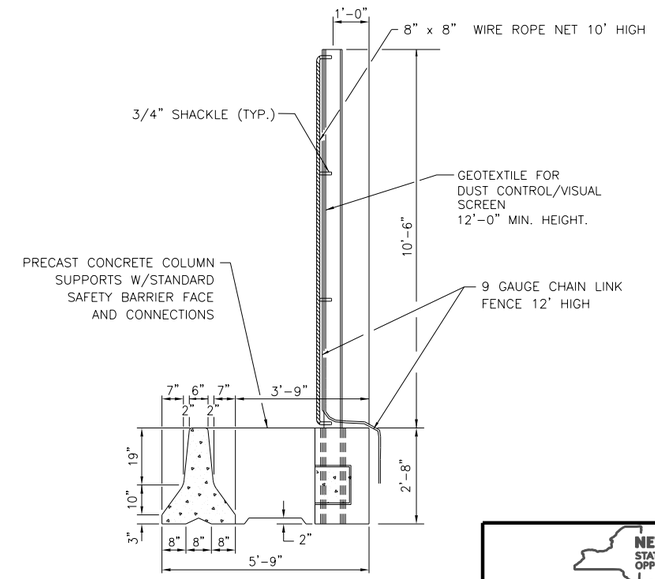

* SECTION A-A

N.T.S

NEW YORK STATE OF OPPORTUNITY. Thruway Authority

U.S. CUSTOMARY STANDARD SHEET

TEMPORARY ROCK CATCHMENT BARRIER
SHEET 1 OF 3

APPROVED MAY 1, 2019

/S/ PATRICK THOMPSON, P.E.
DIRECTOR DESIGN SUPPORT
SERVICES BUREAU

ISSUED UNDER DB 19-001

TA 619-26

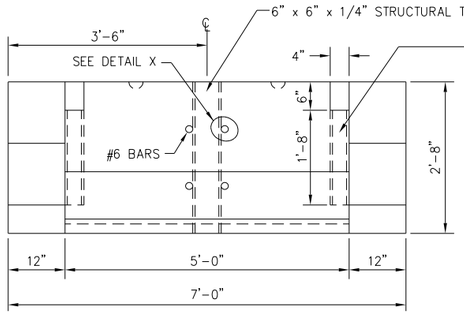

COLUMN SUPPORT
FRONT ELEVATION VIEW
N.T.S.

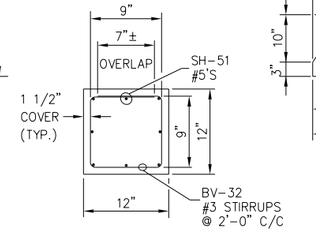

SECTION E-E
N.T.S.

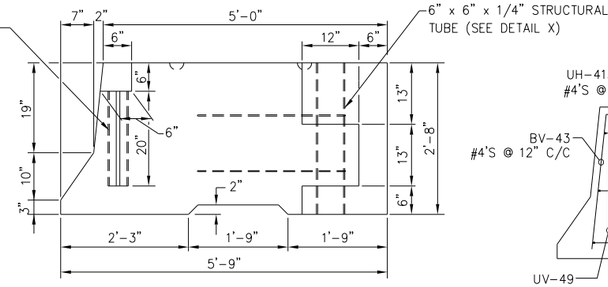

COLUMN SUPPORT
SIDE ELEVATION VIEW
N.T.S.

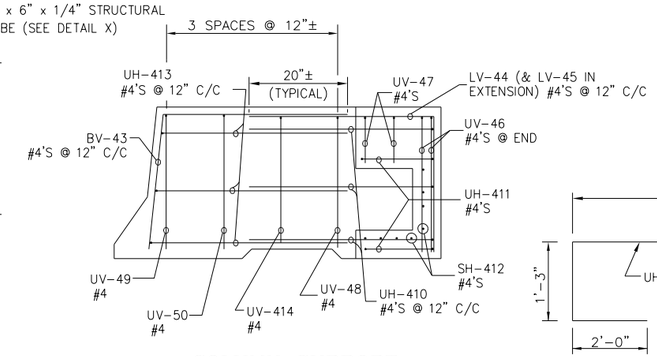

COLUMN SUPPORT
REINFORCEMENT DETAIL

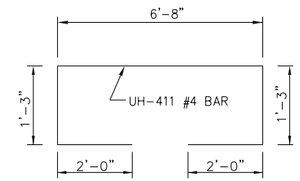

DETAIL C
N.T.S.

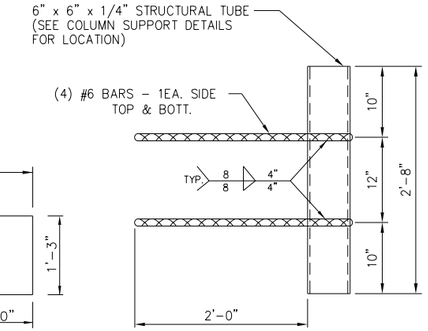

DETAIL X
NTS

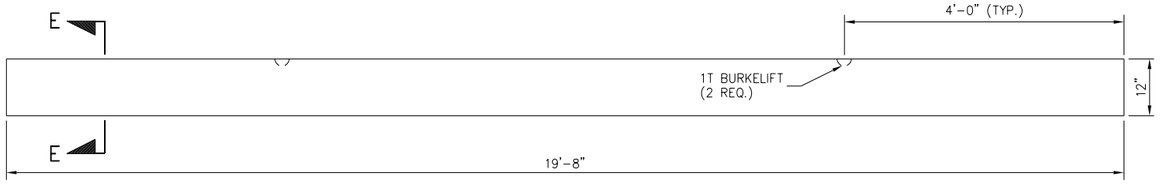

BEAM
ELEVATION VIEW
N.T.S.

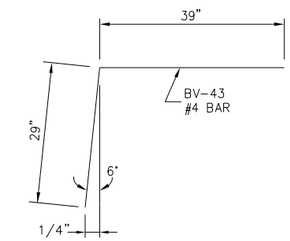

DETAIL B
N.T.S.

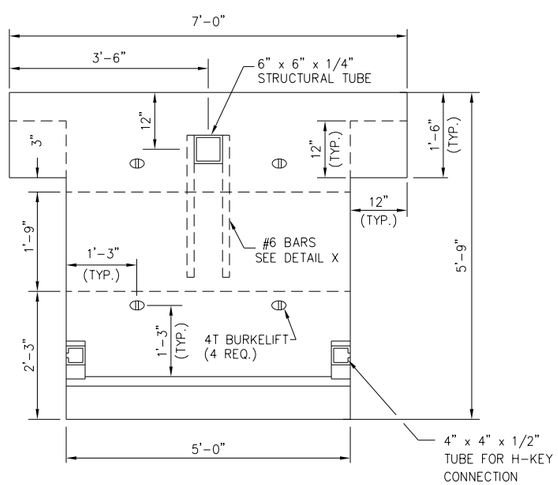

COLUMN SUPPORT
PLAN VIEW
N.T.S.

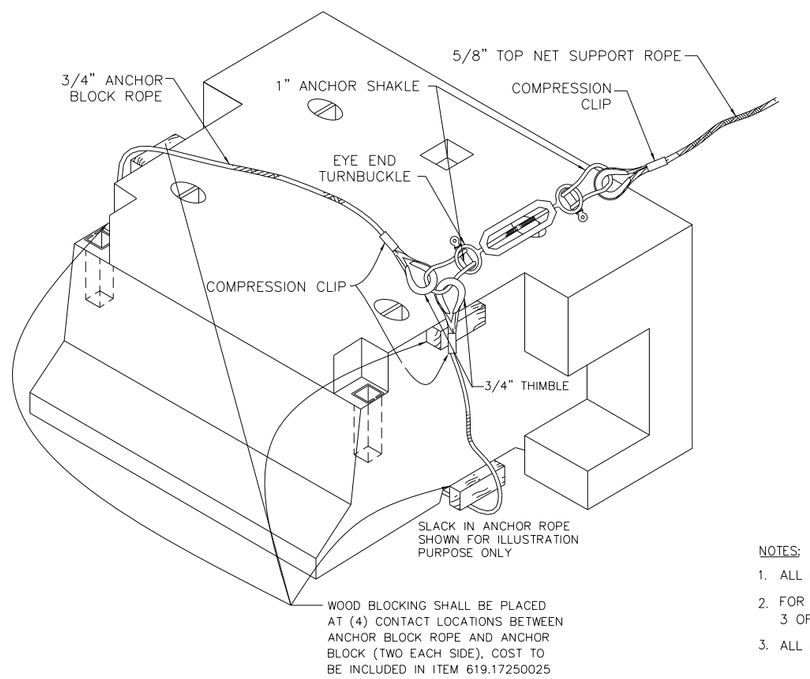

COLUMN SUPPORT ANCHOR BLOCK
DETAIL "A"
NTS

BAR LIST

BAR MK. NO.	SIZE	TYPE	LENGTH	# REQ.	DIMENSIONS	LOCATION
SH-51	5	STRAIGHT	19'-5"	8	---	HORIZONTAL IN BEAM
BV-32	3	STIRRUP	3'-7"	11	SEE SECT. E-E	VERTICAL STIRRUPS-B
BV-43	4	BENT	5'-8"	6	SEE DETAIL B	VERTICAL @ FACE
LV-44	4	L-BAR	5'-8"	6	2'-5" X 3'-3"	VERTICAL @ BACK
LV-45	4	L-BAR	3'-8"	2	2'-5" X 1'-3"	VERTICAL @ BACK
UV-46	4	U-BAR	11'-7"	2	2'-5" X 6'-9" X 2'-5"	VERTICAL @ TOP
UV-47	4	U-BAR	8'-4"	2	9-1/2" X 6'-9" X 9-1/2"	VERTICAL @ TOP
UV-48	4	U-BAR	9'-3"	1	2'-3" X 4'-9" X 2'-3"	VERTICAL @ TOP
UV-49	4	U-BAR	8'-11"	1	2'-5" X 4'-1" X 2'-5"	VERTICAL @ TOP
UV-50	4	U-BAR	9'-7"	1	2'-5" X 4'-9" X 2'-5"	VERTICAL @ TOP
UH-410	4	U-BAR	11'-3"	3	3'-3" X 4'-9" X 3'-3"	HORIZONTAL @ BACK
UH-411	4	U-BAR	13'-3"	2	SEE DETAIL "C"	HORIZONTAL @ BACK
SH-412	4	STRAIGHT	6'-9"	8	----------	AROUND NOTCH
UH-413	4	U-BAR	10'-7"	3	3'-3" X 4'-1" X 3'-3"	HORIZONTAL @ FACE
UV-414	4	U-BAR	9'-3"	1	2'-3" X 4'-9" X 2'-3"	VERTICAL @ TOP

NOTES:

1. ALL DIMENSIONS ARE SHOWN IN INCHES UNLESS OTHERWISE NOTED.
2. FOR SUBSTITUTION OF COMPRESSION CLIPS SEE TA 619-25 SHEET 3 OF 3 FOR DETAILS "AA" AND "BB".
3. ALL REINFORCEMENT SHALL HAVE A MINIMUM COVER OF 1 1/2".

NEW YORK STATE OF OPPORTUNITY. Thruway Authority

U.S. CUSTOMARY STANDARD SHEET

TEMPORARY ROCK CATCHMENT BARRIER
SHEET 2 OF 3

APPROVED MAY 1, 2019

/S/ PATRICK THOMPSON, P.E.
DIRECTOR DESIGN SUPPORT
SERVICES BUREAU

ISSUED UNDER DB 19-001

TA 619-26

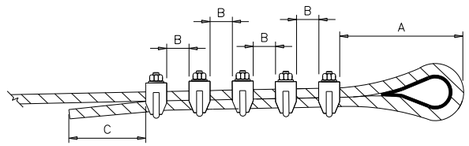

WIRE ROPE DETAIL AA
WIRE ROPE LOOP

N.T.S

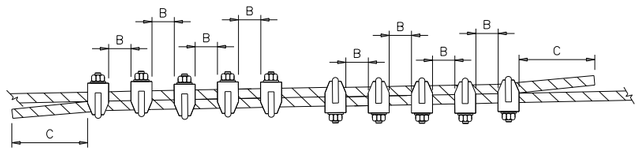

WIRE ROPE DETAIL BB
WIRE ROPE SPLICING

N.T.S

ROPE DIAMETER	WIRE ROPE CLIP SIZE	WIRE ROPE CLIP QUANTITY (AA)	(BB)	A IN	B IN	C IN	TORQUE REQUIRED FT-LBS
3/8"	3/8"	2	4	5"	2"	3"	40
5/8"	5/8"	4	8	9"	4"	6"	127
3/4"	3/4"	5	10	11"	5"	6"	173

NOTES:

1. 9 GAUGE GALVANIZED CHAIN LINK FENCE BY 12' HIGH TO BE CONNECTED TO WIRE ROPE SAFETY NET WITH 3/4" SHACKLES.
2. SEE TA 619-25 SHEET 2 OF 3 FOR DETAIL "A".
3. IF THE SLOPE OF THE ADJACENT TRAVEL LANE WILL CAUSE STORM WATER RUNOFF TO BE DIRECTED TOWARDS THE TEMPORARY ROCK CATCHMENT BARRIER, THE WEEP HOLE DRAINS SHALL BE INCLUDED TO ALLOW WATER TO DRAIN THROUGH THE SAND CUSHION.
4. ALL DIMENSIONS ARE SHOWN IN INCHES UNLESS OTHERWISE NOTED.

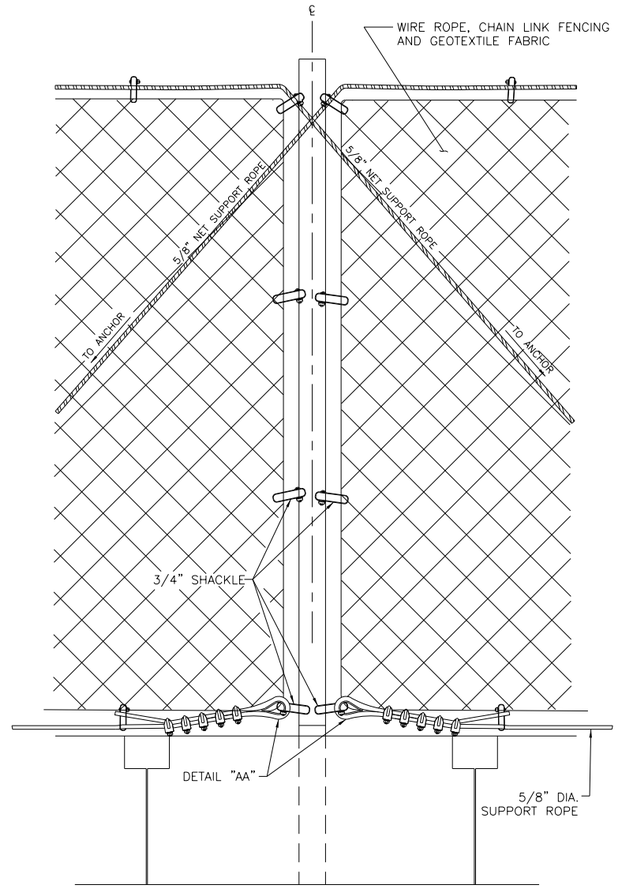

DETAIL "L"

N.T.S

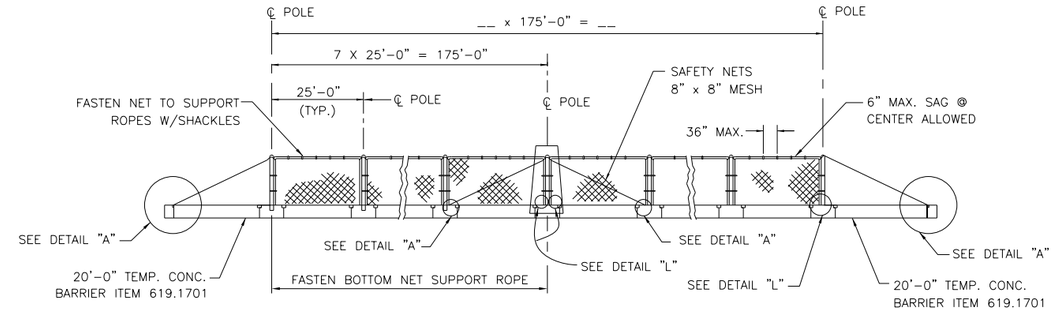

ELEVATION VIEW

N.T.S

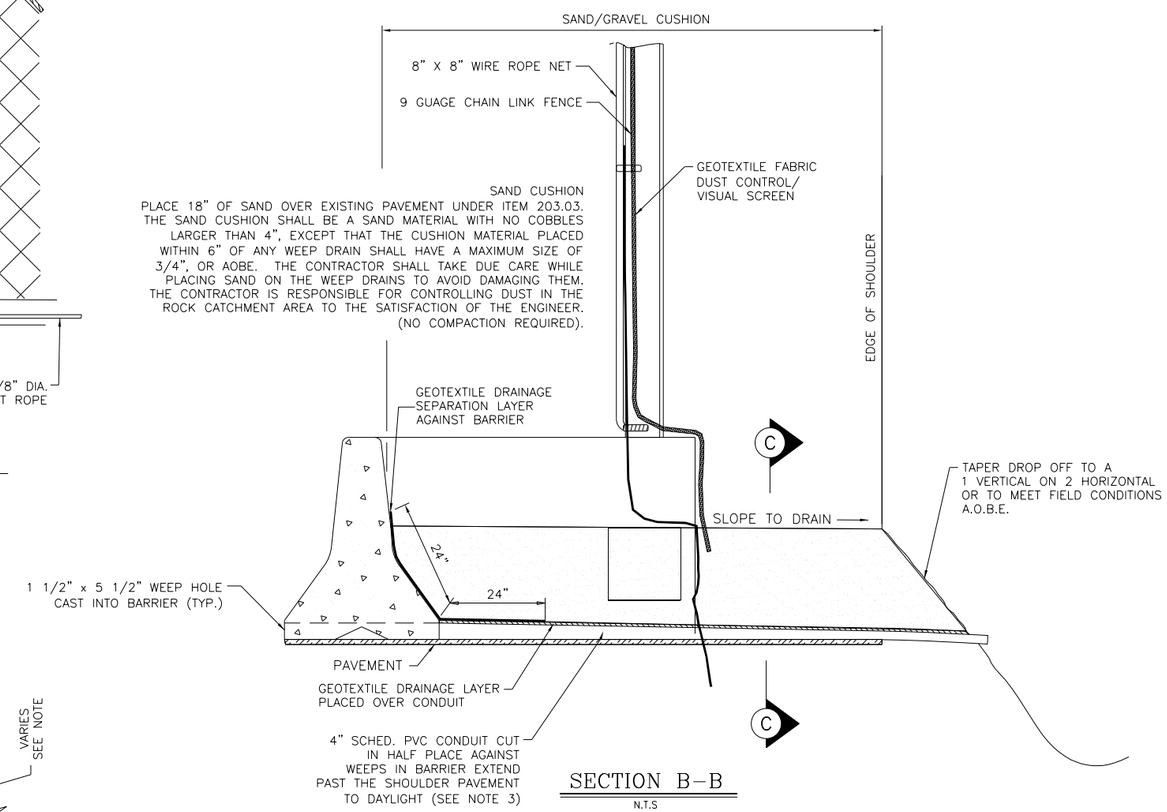

SAND CUSHION
PLACE 18" OF SAND OVER EXISTING PAVEMENT UNDER ITEM 203.03. THE SAND CUSHION SHALL BE A SAND MATERIAL WITH NO COBBLES LARGER THAN 4", EXCEPT THAT THE CUSHION MATERIAL PLACED WITHIN 6" OF ANY WEEP DRAIN SHALL HAVE A MAXIMUM SIZE OF 3/4", OR AOBE. THE CONTRACTOR SHALL TAKE DUE CARE WHILE PLACING SAND ON THE WEEP DRAINS TO AVOID DAMAGING THEM. THE CONTRACTOR IS RESPONSIBLE FOR CONTROLLING DUST IN THE ROCK CATCHMENT AREA TO THE SATISFACTION OF THE ENGINEER. (NO COMPACTION REQUIRED).

SECTION B-B

N.T.S

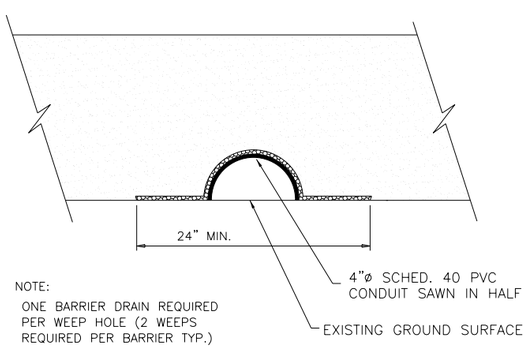

NOTE:
ONE BARRIER DRAIN REQUIRED PER WEEP HOLE (2 WEEPS REQUIRED PER BARRIER TYP.)

SECTION C-C
BARRIER WEEP HOLE DRAIN DETAIL

N.T.S

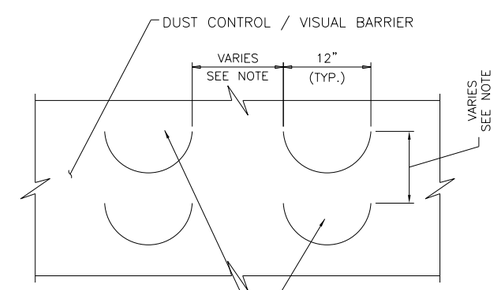

SEMI - CIRCLE VENT FLAP CUT INTO DUST CONTROL/VISUAL BARRIER

NOTE:
THE CONTRACTOR SHALL DETERMINE THE REQUIRED NUMBER OF VENT FLAPS AND PLACEMENT TO PREVENT TEARING THE GEOTEXTILE MATERIAL.

VENT FLAP DETAIL
DUST CONTROL VISUAL BARRIER

N.T.S

NEW YORK STATE OF OPPORTUNITY. | Thruway Authority

U.S. CUSTOMARY STANDARD SHEET

TEMPORARY ROCK CATCHMENT BARRIER
SHEET 3 OF 3

APPROVED MAY 1, 2019

/S/ PATRICK THOMPSON, P.E.
DIRECTOR DESIGN SUPPORT SERVICES BUREAU

ISSUED UNDER DB 19-001

TA 619-26

I-87: NYC LINE - INT. 6 (MP 0.0 - 4.0)														
LANES REQUIRED TO BE MAINTAINED FOR TRAFFIC MANAGEMENT BY DAY OF WEEK & TIME OF DAY														
Time of Day	Mon		Tue		Wed		Thur		Fri		Sat		Sun	
	N*	S	N*	S	N*	S	N*	S	N*	S	N*	S	N*	S
12am-1am	1	1	1	1	1	1	1	1	1	1	2	1	2	1
1am-2am	1	1	1	1	1	1	1	1	1	1	1	1	1	1
2am-3am	1	1	1	1	1	1	1	1	1	1	1	1	1	1
3am-4am	1	1	1	1	1	1	1	1	1	1	1	1	1	1
4am-5am	1	1	1	1	1	1	1	1	1	1	1	1	1	1
5am-6am	1	2	1	2	1	2	1	2	1	2	1	1	1	1
6am-7am	3	3	3	3	3	3	3	3	3	3	1	1	1	1
7am-8am	3	3	3	3	3	3	3	3	3	3	2	2	1	1
8am-9am	3	3	3	3	3	3	3	3	3	3	2	2	2	2
9am-10am	2	2	2	2	2	2	2	2	2	2	2	2	2	2
10am-11am	2	2	2	2	2	2	2	2	2	2	3	2	2	2
11am-12pm	2	2	2	2	2	2	2	2	2	2	3	2	3	2
12pm-1pm	2	2	2	2	2	2	2	2	3	2	3	2	3	2
1pm-2pm	2	2	2	2	2	2	2	2	3	2	3	2	3	2
2pm-3pm	3	2	3	2	3	2	3	2	3	2	3	2	3	3
3pm-4pm	3	3	3	3	3	3	3	3	3	3	3	2	3	3
4pm-5pm	3	3	3	3	3	3	3	3	3	3	3	2	3	3
5pm-6pm	3	3	3	3	3	3	3	3	3	3	3	2	3	3
6pm-7pm	3	3	3	3	3	3	3	3	3	3	3	2	3	3
7pm-8pm	2	2	2	2	2	2	2	2	2	2	3	2	2	3
8pm-9pm	2	2	2	2	2	2	2	2	2	2	2	2	2	3
9pm-10pm	2	2	2	2	2	2	2	2	2	2	2	2	2	2
10pm-11pm	2	1	2	1	2	1	2	1	2	1	2	2	2	2
11pm-12am	2	1	2	1	2	1	2	1	2	1	2	1	2	1

Chart 1 – 07/02/08

NOTES:

1) THE NEW YORK STATE THRUWAY IS A LIMITED ACCESS, HIGH-SPEED, HIGH-VOLUME HIGHWAY. TRAFFIC SHALL BE MAINTAINED IN ACCORDANCE WITH THE *MANUAL ON UNIFORM TRAFFIC CONTROL DEVICES (MUTCD)*, THE *WORK ZONE TRAFFIC CONTROL PLANS*, AND THE *STANDARD SPECIFICATIONS* SECTION 619 AS AMENDED BY THE AUTHORITY.

2) LANE CLOSURES ON THE THRUWAY SHALL ONLY BE ALLOWED IN ACCORDANCE WITH THESE TRAFFIC MANAGEMENT TABLE(S), UNLESS INDICATED OTHERWISE IN THE CONTRACT PLANS OR PROPOSAL DOCUMENTS.

3) IF THE TRAFFIC MANAGEMENT TABLE(S) INDICATE THERE ARE NO LANES AVAILABLE FOR CLOSURE WITHIN A CERTAIN TIME PERIOD, WORK IN SHOULDER CLOSURES (SHORT-DURATION, MOBILE AND SHORT- OR INTERMEDIATE-TERM) WILL ALSO BE PROHIBITED DURING THIS TIME. IF MORE THAN ONE TABLE IS APPLICABLE TO A WORK ZONE LOCATION, THE MOST RESTRICTIVE REQUIREMENTS SHALL BE USED. TRAFFIC MANAGEMENT TABLES DO NOT GUARANTEE LANE CLOSURE AVAILABILITY; THE REQUIREMENTS OF SECTION B. *WORK RESTRICTIONS* SHALL SUPERSEDE THESE TABLES, WHEN APPLICABLE.

4) LANE CLOSURES EXTENDING INTO NYC ON THE MAJOR DEEGAN EXPRESSWAY ARE PROHIBITED 2 HOURS BEFORE AND AFTER YANKEE HOME GAMES

NEW YORK STATE OF OPPORTUNITY. Thruway Authority

U.S. CUSTOMARY STANDARD SHEET

LANE CLOSURE CHARTS
NEW YORK DIVISION
(SHEET 1 OF 26)

APPROVED MAY 1, 2019

/S/ PATRICK THOMPSON, P.E.
DIRECTOR DESIGN SUPPORT SERVICES BUREAU

ISSUED UNDER DB 19-001

TA 619-30

I-87: INT. 6 - INT. 8 (MP 4.0 - 11.3)														
LANES REQUIRED FOR TRAFFIC MANAGEMENT BY DAY OF WEEK & TIME OF DAY														
Time of Day	Mon		Tue		Wed		Thur		Fri		Sat		Sun	
	N	S	N	S	N	S	N	S	N	S	N	S	N	S
12am-1am	1	1	1	1	1	1	1	1	1	1	1	1	1	1
1am-2am	1	1	1	1	1	1	1	1	1	1	1	1	1	1
2am-3am	1	1	1	1	1	1	1	1	1	1	1	1	1	1
3am-4am	1	1	1	1	1	1	1	1	1	1	1	1	1	1
4am-5am	1	1	1	1	1	1	1	1	1	1	1	1	1	1
5am-6am	1	1	1	1	1	1	1	1	1	1	1	1	1	1
6am-7am	2	3	1	3	1	3	1	3	1	3	1	1	1	1
7am-8am	2	3	2	3	2	3	2	3	2	3	1	1	1	1
8am-9am	2	3	2	3	2	3	2	3	2	3	2	1	1	1
9am-10am	2	2	2	2	2	2	2	2	2	2	2	2	2	1
10am-11am	2	2	2	2	2	2	2	2	2	2	2	2	2	2
11am-12pm	2	2	2	2	2	2	2	2	2	2	2	2	2	2
12pm-1pm	2	2	2	2	2	2	2	2	2	2	2	2	2	2
1pm-2pm	2	2	2	2	2	2	2	2	2	2	2	2	2	2
2pm-3pm	2	2	2	2	2	2	2	2	2	2	2	2	2	2
3pm-4pm	2	2	2	2	2	2	2	2	3	2	2	2	2	2
4pm-5pm	2	2	2	2	2	2	2	2	3	2	2	2	2	2
5pm-6pm	2	2	2	2	2	2	2	2	3	2	2	2	2	2
6pm-7pm	2	2	2	2	2	2	2	2	2	2	2	2	2	2
7pm-8pm	2	2	2	2	2	2	2	2	2	2	2	2	2	2
8pm-9pm	2	2	2	2	2	2	2	2	2	2	2	2	1	2
9pm-10pm	1	1	1	1	1	1	1	1	1	2	1	2	1	2
10pm-11pm	1	1	1	1	1	1	1	1	1	1	1	2	1	2
11pm-12am	1	1	1	1	1	1	1	1	1	1	1	1	1	1

Chart.2 – 07/02/08

NOTES:

1) THE NEW YORK STATE THRUWAY IS A LIMITED ACCESS, HIGH-SPEED, HIGH-VOLUME HIGHWAY. TRAFFIC SHALL BE MAINTAINED IN ACCORDANCE WITH THE *MANUAL ON UNIFORM TRAFFIC CONTROL DEVICES (MUTCD),* THE *WORK ZONE TRAFFIC CONTROL PLANS*, AND THE *STANDARD SPECIFICATIONS* SECTION 619 AS AMENDED BY THE AUTHORITY.

2) LANE CLOSURES ON THE THRUWAY SHALL ONLY BE ALLOWED IN ACCORDANCE WITH THESE TRAFFIC MANAGEMENT TABLE(S), UNLESS INDICATED OTHERWISE IN THE CONTRACT PLANS OR PROPOSAL DOCUMENTS.

3) IF THE TRAFFIC MANAGEMENT TABLE(S) INDICATE THERE ARE NO LANES AVAILABLE FOR CLOSURE WITHIN A CERTAIN TIME PERIOD, WORK IN SHOULDER CLOSURES (SHORT-DURATION, MOBILE AND SHORT- OR INTERMEDIATE-TERM) WILL ALSO BE PROHIBITED DURING THIS TIME. IF MORE THAN ONE TABLE IS APPLICABLE TO A WORK ZONE LOCATION, THE MOST RESTRICTIVE REQUIREMENTS SHALL BE USED. TRAFFIC MANAGEMENT TABLES DO NOT GUARANTEE LANE CLOSURE AVAILABILITY; THE REQUIREMENTS OF SECTION B. *WORK RESTRICTIONS* SHALL SUPERSEDE THESE TABLES, WHEN APPLICABLE.

4) LANE CLOSURES EXTENDING INTO NYC ON THE MAJOR DEEGAN EXPRESSWAY ARE PROHIBITED 2 HOURS BEFORE AND AFTER YANKEE HOME GAMES

NEW YORK STATE OF OPPORTUNITY. Thruway Authority

U.S. CUSTOMARY STANDARD SHEET

LANE CLOSURE CHARTS
NEW YORK DIVISION
(SHEET 2 OF 26)

APPROVED MAY 1, 2019

/S/ PATRICK THOMPSON, P.E.
DIRECTOR DESIGN SUPPORT SERVICES BUREAU

ISSUED UNDER DB 19-001

TA 619-30

I-87:TAPPAN ZEE BRIDGE - INT. 8/CWE (MP 11.3 -12.6) **SPRING SEASON Mar. 1 Thru May 10**														
LANES REQUIRED TO BE MAINTAINED FOR TRAFFIC MANAGEMENT BY DAY OF WEEK & TIME OF DAY														
Time of Day	Mon		Tue		Wed		Thur		Fri		Sat		Sun	
	N	S	N	S	N	S	N	S	N	S	N	S	N	S
12am-1am	1	1	1	1	1	1	1	1	1	1	1	1	1	1
1am-2am	1	1	1	1	1	1	1	1	1	1	1	1	1	1
2am-3am	1	1	1	1	1	1	1	1	1	1	1	1	1	1
3am-4am	1	1	1	1	1	1	1	1	1	1	1	1	1	1
4am-5am	1	1	1	1	1	1	1	1	1	1	1	1	1	1
5am-6am	1	3	1	3	1	3	1	3	1	3	1	1	1	1
6am-7am	2	4	2	4	2	4	2	4	2	4	2	2	1	2
7am-8am	3	4	3	4	3	4	3	4	3	4	2	2	1	2
8am-9am	3	4	3	4	3	4	3	4	3	4	3	3	2	2
9am-10am	3	4	3	4	3	4	3	4	3	4	3	3	3	3
10am-11am	3	3	3	3	3	3	3	3	3	3	3	3	3	3
11am-12pm	3	3	3	3	3	3	3	3	3	3	4	3	4	4
12pm-1pm	3	3	3	3	3	3	3	3	3	3	4	4	4	4
1pm-2pm	3	3	3	3	3	3	3	3	4	3	4	4	4	4
2pm-3pm	3	3	3	3	3	3	3	3	4	4	4	4	4	4
3pm-4pm	4	4	4	3	4	3	4	4	4	4	4	4	4	4
4pm-5pm	4	4	4	4	4	4	4	4	4	4	4	4	4	4
5pm-6pm	4	4	4	4	4	4	4	4	4	4	4	4	4	4
6pm-7pm	4	4	4	4	4	4	4	4	4	4	3	4	3	4
7pm-8pm	3	3	3	3	3	3	3	3	4	3	3	3	3	4
8pm-9pm	2	2	2	2	2	2	3	2	3	3	3	3	3	4
9pm-10pm	2	2	2	2	2	2	2	2	3	2	2	3	2	3
10pm-11pm	1	2*	2*	2*	2*	2	2	2	2	2	2	3	2	2
11pm-12am	1	1	1	1	1	1	1	1	2	2	2	2	1	1

Chart 3 – 06/12/17 Note: All Ramps at Exits 8, 8A, and 9 follow this table.

*One Lane Required To Be Maintained Beginning at 10:30PM

I-87:TAPPAN ZEE BRIDGE - INT. 8/CWE (MP 11.3 -12.6) **SUMMER SEASON May 11 Thru Sept. 15**														
LANES REQUIRED TO BE MAINTAINED FOR TRAFFIC MANAGEMENT BY DAY OF WEEK & TIME OF DAY														
Time of Day	Mon		Tue		Wed		Thur		Fri		Sat		Sun	
	N	S	N	S	N	S	N	S	N	S	N	S	N	S
12am-1am	1	1	1	1	1	1	1	1	1	1	1	1	1	2
1am-2am	1	1	1	1	1	1	1	1	1	1	1	1	1	1
2am-3am	1	1	1	1	1	1	1	1	1	1	1	1	1	1
3am-4am	1	1	1	1	1	1	1	1	1	1	1	1	1	1
4am-5am	1	2	1	1	1	1	1	1	1	1	1	1	1	1
5am-6am	1	3	1	3	1	3	1	3	1	3	1	1	1	1
6am-7am	2	4	2	4	2	4	2	4	2	4	2	2	1	2
7am-8am	3	4	3	4	3	4	3	4	3	4	3	3	2	2
8am-9am	4	4	4	4	4	4	4	4	4	4	3	3	2	3
9am-10am	3	4	3	4	3	4	3	4	3	4	4	3	3	3
10am-11am	3	3	3	3	3	3	3	4	3	4	4	4	3	3
11am-12pm	3	3	3	3	3	3	3	3	4	4	4	4	4	4
12pm-1pm	3	3	3	3	3	3	3	3	4	4	4	4	4	4
1pm-2pm	3	3	3	3	3	3	3	3	4	4	4	4	4	4
2pm-3pm	4	4	4	3	4	3	4	3	4	4	4	4	4	4
3pm-4pm	4	4	4	3	4	3	4	4	4	4	4	4	4	4
4pm-5pm	4	4	4	4	4	4	4	4	4	4	4	4	4	4
5pm-6pm	4	4	4	4	4	4	4	4	4	4	4	4	4	4
6pm-7pm	4	4	4	4	4	4	4	4	4	4	3	4	3	4
7pm-8pm	4	3	4	3	4	3	4	3	4	4	3	4	3	4
8pm-9pm	3	2	3	2	3	3	3	3	3	3	3	3	3	4
9pm-10pm	2	2	2	2	2	2	2	2	3	3	2	3	3	4
10pm-11pm	2	2	2	2	2	2	2	2	2	2	2	3	2	3
11pm-12am	1	1	1	1	2	1	2	1	2	2	2	2	2	2

Chart 3 – 07/07/2017 Note: All Ramps at Exits 8, 8A, and 9 follow this table.

NOTES:

1) THE NEW YORK STATE THRUWAY IS A LIMITED ACCESS, HIGH-SPEED, HIGH-VOLUME HIGHWAY. TRAFFIC SHALL BE MAINTAINED IN ACCORDANCE WITH THE *MANUAL ON UNIFORM TRAFFIC CONTROL DEVICES (MUTCD)*, THE *WORK ZONE TRAFFIC CONTROL PLANS*, AND THE *STANDARD SPECIFICATIONS* SECTION 619 AS AMENDED BY THE AUTHORITY.

2) LANE CLOSURES ON THE THRUWAY SHALL ONLY BE ALLOWED IN ACCORDANCE WITH THESE TRAFFIC MANAGEMENT TABLE(S), UNLESS INDICATED OTHERWISE IN THE CONTRACT PLANS OR PROPOSAL DOCUMENTS.

3) IF THE TRAFFIC MANAGEMENT TABLE(S) INDICATE THERE ARE NO LANES AVAILABLE FOR CLOSURE WITHIN A CERTAIN TIME PERIOD, WORK IN SHOULDER CLOSURES (SHORT-DURATION, MOBILE AND SHORT- OR INTERMEDIATE-TERM) WILL ALSO BE PROHIBITED DURING THIS TIME. IF MORE THAN ONE TABLE IS APPLICABLE TO A WORK ZONE LOCATION, THE MOST RESTRICTIVE REQUIREMENTS SHALL BE USED. TRAFFIC MANAGEMENT TABLES DO NOT GUARANTEE LANE CLOSURE AVAILABILITY; THE REQUIREMENTS OF SECTION B. *WORK RESTRICTIONS* SHALL SUPERSEDE THESE TABLES, WHEN APPLICABLE.

4) LANE CLOSURES EXTENDING INTO NYC ON THE MAJOR DEEGAN EXPRESSWAY ARE PROHIBITED 2 HOURS BEFORE AND AFTER YANKEE HOME GAMES

NEW YORK STATE OF OPPORTUNITY. Thruway Authority

U.S. CUSTOMARY STANDARD SHEET

LANE CLOSURE CHARTS
NEW YORK DIVISION
(SHEET 3 OF 26)

APPROVED MAY 1, 2019

/S/ PATRICK THOMPSON, P.E.
DIRECTOR DESIGN SUPPORT SERVICES BUREAU

ISSUED UNDER DB 19-001

TA 619-30

I-87:TAPPAN ZEE BRIDGE - INT. 8/CWE (MP 11.3 -12.6) **FALL SEASON Sept. 16 Thru Nov. 30**

LANES REQUIRED TO BE MAINTAINED FOR TRAFFIC MANAGEMENT BY DAY OF WEEK & TIME OF DAY

Time of Day	Mon		Tue		Wed		Thur		Fri		Sat		Sun	
	N	S	N	S	N	S	N	S	N	S	N	S	N	S
12am-1am	1	1	1	1	1	1	1	1	1	1	1	1	1	1
1am-2am	1	1	1	1	1	1	1	1	1	1	1	1	1	1
2am-3am	1	1	1	1	1	1	1	1	1	1	1	1	1	1
3am-4am	1	1	1	1	1	1	1	1	1	1	1	1	1	1
4am-5am	1	2	1	1	1	1	1	1	1	1	1	1	1	1
5am-6am	1	3	1	3	1	3	1	3	1	3	1	1	1	1
6am-7am	2	4	2	4	2	4	2	4	2	4	2	2	1	2
7am-8am	3	4	3	4	3	4	3	4	3	4	2	3	2	2
8am-9am	4	4	4	4	4	4	3	4	3	4	3	3	2	3
9am-10am	3	4	3	4	3	4	3	4	3	4	3	3	3	3
10am-11am	3	3	3	3	3	3	3	3	3	3	4	3	3	3
11am-12pm	3	3	3	3	3	3	3	3	3	3	4	4	4	4
12pm-1pm	3	3	3	3	3	3	3	3	4	3	4	4	4	4
1pm-2pm	3	3	3	3	3	3	3	3	4	3	4	4	4	4
2pm-3pm	3	3	3	3	4	3	3	3	4	4	4	4	4	4
3pm-4pm	4	4	4	3	4	3	4	4	4	4	4	4	4	4
4pm-5pm	4	4	4	4	4	4	4	4	4	4	4	4	4	4
5pm-6pm	4	4	4	4	4	4	4	4	4	4	4	4	4	4
6pm-7pm	4	4	4	4	4	4	4	4	4	4	4	4	3	4
7pm-8pm	4	3	4	3	4	3	4	3	4	4	3	4	3	4
8pm-9pm	2	2	2	2	3	2	3	2	3	3	3	3	3	4
9pm-10pm	2	2	2	2	2	2	2	2	3	2	2	3	2	3
10pm-11pm	1	2	2	2	2	2	2	2	2	2	2	3	2	3
11pm-12am	1	1	1	1	1	1	1	1	2	2	2	2	1	2

Chart 3 – 07/07/2017 Note: All Ramps at Exits 8, 8A, and 9 follow this table.

I-87:TAPPAN ZEE BRIDGE - INT. 8/CWE (MP 11.3 -12.6) **WINTER SEASON Dec. 1 Thru Feb. 28**

LANES REQUIRED TO BE MAINTAINED FOR TRAFFIC MANAGEMENT BY DAY OF WEEK & TIME OF DAY

Time of Day	Mon		Tue		Wed		Thur		Fri		Sat		Sun	
	N	S	N	S	N	S	N	S	N	S	N	S	N	S
12am-1am	1	1	1	1	1	1	1	1	1	1	1	1	1	1
1am-2am	1	1	1	1	1	1	1	1	1	1	1	1	1	1
2am-3am	1	1	1	1	1	1	1	1	1	1	1	1	1	1
3am-4am	1	1	1	1	1	1	1	1	1	1	1	1	1	1
4am-5am	1	2	1	1	1	1	1	1	1	1	1	1	1	1
5am-6am	1	3	1	3	1	3	1	3	1	3	1	1	1	1
6am-7am	2	4	2	4	2	4	2	4	2	4	1	2	1	2
7am-8am	3	4	3	4	3	4	3	4	3	4	2	2	1	2
8am-9am	3	4	3	4	3	4	3	4	3	4	3	3	2	2
9am-10am	3	4	3	4	3	4	3	4	3	4	3	3	2	3
10am-11am	3	3	3	3	3	3	3	3	3	3	3	3	3	3
11am-12pm	3	3	3	3	3	3	3	3	3	3	3	3	3	3
12pm-1pm	3	3	3	3	3	3	3	3	3	3	3	4	3	3
1pm-2pm	3	3	3	3	3	3	3	3	4	3	3	4	3	4
2pm-3pm	3	3	3	3	3	3	3	3	4	4	3	4	3	4
3pm-4pm	4	4	4	3	4	3	4	4	4	4	3	4	3	4
4pm-5pm	4	4	4	4	4	4	4	4	4	4	3	4	3	4
5pm-6pm	4	4	4	4	4	4	4	4	4	4	3	4	3	4
6pm-7pm	4	3	4	3	4	3	4	3	4	4	3	4	3	4
7pm-8pm	3	2	3	3	3	3	3	3	3	3	3	3	2	3
8pm-9pm	2	2	2	2	3	2	3	2	3	2	2	3	2	3
9pm-10pm	2	2	2	2	2	2	2	2	2	2	2	2	2	3
10pm-11pm	1	1	2*	2	2*	2	2*	2	2	2	2	2	1	2
11pm-12am	1	1	1	1	1	1	1	1	2	2	2	2	1	1

Chart 3 – 06/12/17 Note: All Ramps at Exits 8, 8A, and 9 follow this table.

*One Lane Required To Be Maintained Beginning at 10:30PM

NOTES:

1) THE NEW YORK STATE THRUWAY IS A LIMITED ACCESS, HIGH-SPEED, HIGH-VOLUME HIGHWAY. TRAFFIC SHALL BE MAINTAINED IN ACCORDANCE WITH THE *MANUAL ON UNIFORM TRAFFIC CONTROL DEVICES (MUTCD)*, THE *WORK ZONE TRAFFIC CONTROL PLANS*, AND THE *STANDARD SPECIFICATIONS* SECTION 619 AS AMENDED BY THE AUTHORITY.

2) LANE CLOSURES ON THE THRUWAY SHALL ONLY BE ALLOWED IN ACCORDANCE WITH THESE TRAFFIC MANAGEMENT TABLE(S), UNLESS INDICATED OTHERWISE IN THE CONTRACT PLANS OR PROPOSAL DOCUMENTS.

3) IF THE TRAFFIC MANAGEMENT TABLE(S) INDICATE THERE ARE NO LANES AVAILABLE FOR CLOSURE WITHIN A CERTAIN TIME PERIOD, WORK IN SHOULDER CLOSURES (SHORT-DURATION, MOBILE AND SHORT- OR INTERMEDIATE-TERM) WILL ALSO BE PROHIBITED DURING THIS TIME. IF MORE THAN ONE TABLE IS APPLICABLE TO A WORK ZONE LOCATION, THE MOST RESTRICTIVE REQUIREMENTS SHALL BE USED. TRAFFIC MANAGEMENT TABLES DO NOT GUARANTEE LANE CLOSURE AVAILABILITY; THE REQUIREMENTS OF SECTION B. *WORK RESTRICTIONS* SHALL SUPERSEDE THESE TABLES, WHEN APPLICABLE.

NEW YORK STATE OF OPPORTUNITY. Thruway Authority

U.S. CUSTOMARY STANDARD SHEET

LANE CLOSURE CHARTS
NEW YORK DIVISION
(SHEET 4 OF 26)

APPROVED MAY 1, 2019

/S/ PATRICK THOMPSON, P.E.
DIRECTOR DESIGN SUPPORT SERVICES BUREAU

ISSUED UNDER DB 19-001

TA 619-30

I-87:TAPPAN ZEE BRIDGE - INT. 11(MP 12.6-17.6N/17.8S) **SPRING SEASON Mar. 1 Thru May 10**														
LANES REQUIRED TO BE MAINTAINED FOR TRAFFIC MANAGEMENT BY DAY OF WEEK & TIME OF DAY														
Time of Day	Mon		Tue		Wed		Thur		Fri		Sat		Sun	
	N	S	N	S	N	S	N	S	N	S	N	S	N	S
12am-1am	1	1	1	1	1	1	1	1	1	1	1	1	1	1
1am-2am	1	1	1	1	1	1	1	1	1	1	1	1	1	1
2am-3am	1	1	1	1	1	1	1	1	1	1	1	1	1	1
3am-4am	1	1	1	1	1	1	1	1	1	1	1	1	1	1
4am-5am	1	1	1	1	1	1	1	1	1	1	1	1	1	1
5am-6am	1	3	1	3	1	3	1	3	1	3	1	1	1	1
6am-7am	2	4	2	4	2	4	2	4	2	4	1	2	1	1
7am-8am	3	4	3	4	3	4	3	4	3	4	2	3	1	2
8am-9am	3	4	3	4	3	4	3	4	3	4	3	3	2	2
9am-10am	3	4	3	4	3	4	3	4	3	4	3	3	2	3
10am-11am	3	3	3	3	3	3	3	3	3	3	3	3	3	3
11am-12pm	3	3	3	3	3	3	3	3	3	3	3	3	3	4
12pm-1pm	3	3	3	3	3	3	3	3	3	3	4	3	3	4
1pm-2pm	3	3	3	3	3	3	3	3	4	3	4	3	4	4
2pm-3pm	3	3	3	3	3	3	3	3	4	3	4	4	4	4
3pm-4pm	4	3	4	3	4	3	4	3	4	3	4	4	4	4
4pm-5pm	4	3	4	3	4	3	4	3	4	4	4	4	4	4
5pm-6pm	4	3	4	3	4	4	4	4	4	4	4	4	4	4
6pm-7pm	4	3	4	3	4	3	4	3	4	3	3	4	3	4
7pm-8pm	3	3	3	3	3	3	4	3	4	3	3	3	3	4
8pm-9pm	2	2	3	2	3	2	3	2	3	3	3	3	3	4
9pm-10pm	2	2	2	2	2	2	2	2	3	2	2	3	2	3
10pm-11pm	1	2*	2*	2*	2	2*	2	2	2	2	2	3	2*	2
11pm-12am	1	1	1	1	1	1	2**	1	2	2	2	2	1	1

Chart 4 – 05/15/17 Note: All Ramps at Exits 10 and 11 follow this table.

*One Lane Required To Be Maintained Beginning at 10:30PM
** One Lane Required To Be Maintained Beginning at 11:30PM

I-87:TAPPAN ZEE BRIDGE-INT. 11(MP 12.6-17.6N/17.8S) **Summer Season May 11 Thru Sept 15**														
LANES REQUIRED TO BE MAINTAINED FOR TRAFFIC MANAGEMENT BY DAY OF WEEK & TIME OF DAY														
Time of Day	Mon		Tue		Wed		Thur		Fri		Sat		Sun	
	N	S	N	S	N	S	N	S	N	S	N	S	N	S
12am-1am	1	1	1	1	1	1	1	1	1	1	1	1	1	2
1am-2am	1	1	1	1	1	1	1	1	1	1	1	1	1	1
2am-3am	1	1	1	1	1	1	1	1	1	1	1	1	1	1
3am-4am	1	1	1	1	1	1	1	1	1	1	1	1	1	1
4am-5am	1	1	1	1	1	1	1	1	1	1	1	1	1	1
5am-6am	1	3	1	3	1	3	1	3	1	3	1	1	1	1
6am-7am	2	4	2	4	2	4	2	4	2	4	2	2	1	2
7am-8am	3	4	3	4	3	4	3	4	3	4	2	3	2	2
8am-9am	3	4	3	4	3	4	3	4	3	4	3	3	2	2
9am-10am	3	4	3	4	3	4	3	4	3	4	3	3	3	3
10am-11am	3	3	3	3	3	3	3	3	3	3	4	3	3	3
11am-12pm	3	3	3	3	3	3	3	3	3	3	4	4	3	4
12pm-1pm	3	3	3	3	3	3	3	3	4	3	4	4	4	4
1pm-2pm	3	3	3	3	3	3	3	3	4	3	4	4	4	4
2pm-3pm	4	3	4	3	4	3	4	3	4	3	4	4	4	4
3pm-4pm	4	3	4	3	4	3	4	3	4	4	4	4	4	4
4pm-5pm	4	3	4	3	4	3	4	4	4	4	4	4	4	4
5pm-6pm	4	4	4	4	4	4	4	4	4	4	4	4	4	4
6pm-7pm	4	3	4	3	4	3	4	4	4	4	3	4	3	4
7pm-8pm	4	3	4	3	4	3	4	3	4	3	3	4	3	4
8pm-9pm	3	2	3	2	3	2	3	3	3	3	3	3	3	4
9pm-10pm	2	2	2	2	2	2	3	2	3	3	2	3	3	4
10pm-11pm	2	2	2	2	2	2	2	2	2	2	2	3	2	3
11pm-12am	1	1	1	1	2	1	2	1	2	2	2	2	2	2

Chart 4 – 07/07/2017 Note: All Ramps at Exits 10 and 11 follow this table.

NOTES:

1) THE NEW YORK STATE THRUWAY IS A LIMITED ACCESS, HIGH-SPEED, HIGH-VOLUME HIGHWAY. TRAFFIC SHALL BE MAINTAINED IN ACCORDANCE WITH THE *MANUAL ON UNIFORM TRAFFIC CONTROL DEVICES (MUTCD)*, THE *WORK ZONE TRAFFIC CONTROL PLANS*, AND THE *STANDARD SPECIFICATIONS* SECTION 619 AS AMENDED BY THE AUTHORITY.

2) LANE CLOSURES ON THE THRUWAY SHALL ONLY BE ALLOWED IN ACCORDANCE WITH THESE TRAFFIC MANAGEMENT TABLE(S), UNLESS INDICATED OTHERWISE IN THE CONTRACT PLANS OR PROPOSAL DOCUMENTS.

3) IF THE TRAFFIC MANAGEMENT TABLE(S) INDICATE THERE ARE NO LANES AVAILABLE FOR CLOSURE WITHIN A CERTAIN TIME PERIOD, WORK IN SHOULDER CLOSURES (SHORT-DURATION, MOBILE AND SHORT- OR INTERMEDIATE-TERM) WILL ALSO BE PROHIBITED DURING THIS TIME. IF MORE THAN ONE TABLE IS APPLICABLE TO A WORK ZONE LOCATION, THE MOST RESTRICTIVE REQUIREMENTS SHALL BE USED. TRAFFIC MANAGEMENT TABLES DO NOT GUARANTEE LANE CLOSURE AVAILABILITY; THE REQUIREMENTS OF SECTION B. *WORK RESTRICTIONS* SHALL SUPERSEDE THESE TABLES, WHEN APPLICABLE.

NEW YORK STATE OF OPPORTUNITY. Thruway Authority

U.S. CUSTOMARY STANDARD SHEET

LANE CLOSURE CHARTS
NEW YORK DIVISION
(SHEET 5 OF 26)

APPROVED MAY 1, 2019

/S/ PATRICK THOMPSON, P.E.
DIRECTOR DESIGN SUPPORT SERVICES BUREAU

ISSUED UNDER DB 19-001

TA 619-30

I-87:TAPPAN ZEE BRIDGE - INT. 11(MP 12.6-17.6N/17.8S) **FALL SEASON Sept. 16 Thru Nov. 30**

LANES REQUIRED TO BE MAINTAINED FOR TRAFFIC MANAGEMENT BY DAY OF WEEK & TIME OF DAY

Time of Day	Mon		Tue		Wed		Thur		Fri		Sat		Sun	
	N	S	N	S	N	S	N	S	N	S	N	S	N	S
12am-1am	1	1	1	1	1	1	1	1	1	1	1	1	1	1
1am-2am	1	1	1	1	1	1	1	1	1	1	1	1	1	1
2am-3am	1	1	1	1	1	1	1	1	1	1	1	1	1	1
3am-4am	1	1	1	1	1	1	1	1	1	1	1	1	1	1
4am-5am	1	1	1	1	1	1	1	1	1	1	1	1	1	1
5am-6am	1	3	1	3	1	3	1	3	1	3	1	1	1	1
6am-7am	2	4	2	4	2	4	2	4	2	4	2	2	1	1
7am-8am	3	4	3	4	3	4	3	4	3	4	2	3	2	2
8am-9am	3	4	3	4	3	4	3	4	3	4	3	3	2	2
9am-10am	3	4	3	4	3	4	3	4	3	4	3	3	3	3
10am-11am	3	3	3	3	3	3	3	3	3	3	4	3	3	3
11am-12pm	3	3	3	3	3	3	3	3	3	3	4	3	4	4
12pm-1pm	3	3	3	3	3	3	3	3	4	3	4	3	4	4
1pm-2pm	3	3	3	3	3	3	3	3	4	3	4	3	4	4
2pm-3pm	3	3	3	3	3	3	4	3	4	3	4	4	4	4
3pm-4pm	4	3	4	3	4	3	4	3	4	3	4	4	4	4
4pm-5pm	4	3	4	3	4	3	4	3	4	4	4	4	4	4
5pm-6pm	4	3	4	3	4	4	4	4	4	4	4	4	4	4
6pm-7pm	4	3	4	3	4	3	4	3	4	4	3	4	3	4
7pm-8pm	4	3	4	3	4	3	4	3	4	3	3	4	3	4
8pm-9pm	2	2	3	2	3	2	3	2	3	3	3	3	3	4
9pm-10pm	2	2	2	2	2	2	2	2	3	2	2	3	2	3
10pm-11pm	2	2	2	2	2	2	2	2	2	2	2	3	2	2
11pm-12am	1	1	1	1	1	1	1	1	2	2	2	2	1	1

Chart 4 – 07/07/2017 Note: All Ramps at Exits 10 and 11 follow this table.

I-87:TAPPAN ZEE BRIDGE - INT. 11(MP 12.6-17.6N/17.8S) **WINTER SEASON Dec. 1 Thru Feb. 28**

LANES REQUIRED TO BE MAINTAINED FOR TRAFFIC MANAGEMENT BY DAY OF WEEK & TIME OF DAY

Time of Day	Mon		Tue		Wed		Thur		Fri		Sat		Sun	
	N	S	N	S	N	S	N	S	N	S	N	S	N	S
12am-1am	1	1	1	1	1	1	1	1	1	1	1	1	1	1
1am-2am	1	1	1	1	1	1	1	1	1	1	1	1	1	1
2am-3am	1	1	1	1	1	1	1	1	1	1	1	1	1	1
3am-4am	1	1	1	1	1	1	1	1	1	1	1	1	1	1
4am-5am	1	1	1	1	1	1	1	1	1	1	1	1	1	1
5am-6am	1	3	1	3	1	3	1	3	1	3	1	1	1	1
6am-7am	2	4	2	4	2	4	2	4	2	4	1	2	1	1
7am-8am	3	4	3	4	3	4	3	4	3	4	2	2	1	1
8am-9am	3	4	3	4	3	4	3	4	3	4	2	2	2	2
9am-10am	3	4	3	4	3	4	3	4	3	4	3	3	2	2
10am-11am	3	3	3	3	3	3	3	3	3	3	3	3	3	3
11am-12pm	3	3	3	3	3	3	3	3	3	3	3	3	3	3
12pm-1pm	3	3	3	3	3	3	3	3	3	3	3	3	3	3
1pm-2pm	3	3	3	3	3	3	3	3	4	3	3	3	3	4
2pm-3pm	3	3	3	3	3	3	3	3	4	3	3	3	3	4
3pm-4pm	4	3	4	3	4	3	4	3	4	3	3	3	3	4
4pm-5pm	4	3	4	3	4	3	4	3	4	4	3	4	3	4
5pm-6pm	4	3	4	3	4	3	4	4	4	4	3	4	3	4
6pm-7pm	4	3	4	3	4	3	4	3	4	3	3	4	3	4
7pm-8pm	3	2	3	3	3	3	3	3	4	3	3	3	3	3
8pm-9pm	2	2	2	2	2	2	3	2	3	2	2	3	2	3
9pm-10pm	2	2	2	2	2	2	2	2	3	2	2	2	2	3
10pm-11pm	1	2*	2*	2*	2	2*	2	2	2	2	2	2	1	2
11pm-12am	1	1	1	1	1	1	1	1	2	1	2	2	1	1

Chart 4 – 05/31/2017 Note: All Ramps at Exits 10 and 11 follow this table.

*One Lane Required To Be Maintained Beginning at 10:30PM

NOTES:

1) THE NEW YORK STATE THRUWAY IS A LIMITED ACCESS, HIGH-SPEED, HIGH-VOLUME HIGHWAY. TRAFFIC SHALL BE MAINTAINED IN ACCORDANCE WITH THE *MANUAL ON UNIFORM TRAFFIC CONTROL DEVICES (MUTCD)*, THE *WORK ZONE TRAFFIC CONTROL PLANS*, AND THE *STANDARD SPECIFICATIONS* SECTION 619 AS AMENDED BY THE AUTHORITY.

2) LANE CLOSURES ON THE THRUWAY SHALL ONLY BE ALLOWED IN ACCORDANCE WITH THESE TRAFFIC MANAGEMENT TABLE(S), UNLESS INDICATED OTHERWISE IN THE CONTRACT PLANS OR PROPOSAL DOCUMENTS.

3) IF THE TRAFFIC MANAGEMENT TABLE(S) INDICATE THERE ARE NO LANES AVAILABLE FOR CLOSURE WITHIN A CERTAIN TIME PERIOD, WORK IN SHOULDER CLOSURES (SHORT-DURATION, MOBILE AND SHORT- OR INTERMEDIATE-TERM) WILL ALSO BE PROHIBITED DURING THIS TIME. IF MORE THAN ONE TABLE IS APPLICABLE TO A WORK ZONE LOCATION, THE MOST RESTRICTIVE REQUIREMENTS SHALL BE USED. TRAFFIC MANAGEMENT TABLES DO NOT GUARANTEE LANE CLOSURE AVAILABILITY; THE REQUIREMENTS OF SECTION B. *WORK RESTRICTIONS* SHALL SUPERSEDE THESE TABLES, WHEN APPLICABLE.

NEW YORK STATE OF OPPORTUNITY. Thruway Authority

U.S. CUSTOMARY STANDARD SHEET

LANE CLOSURE CHARTS
NEW YORK DIVISION
(SHEET 6 OF 26)

APPROVED MAY 1, 2019

/S/ PATRICK THOMPSON, P.E.
DIRECTOR DESIGN SUPPORT SERVICES BUREAU

ISSUED UNDER DB 19-001

TA 619-30

I-87: INT. 11 - SPRING VALLEY (MP 17.6 N/17.8 S - 24.3)														
LANES REQUIRED TO BE MAINTAINED FOR TRAFFIC MANAGEMENT BY DAY OF WEEK & TIME OF DAY														
Time of Day	Mon		Tue		Wed		Thur		Fri		Sat		Sun	
	N	S	N	S	N	S	N	S	N	S	N	S	N	S
12am-1am	1	1	1	1	1	1	1	1	1	1	1	1	1	1
1am-2am	1	1	1	1	1	1	1	1	1	1	1	1	1	1
2am-3am	1	1	1	1	1	1	1	1	1	1	1	1	1	1
3am-4am	1	1	1	1	1	1	1	1	1	1	1	1	1	1
4am-5am	1	1	1	1	1	1	1	1	1	1	1	1	1	1
5am-6am	1	2	1	2	1	2	1	2	1	2	1	1	1	1
6am-7am	2	3	2	3	2	3	2	3	2	3	2	2	1	1
7am-8am	3	3	3	3	3	3	3	3	3	3	2	2	1	1
8am-9am	3	3	3	3	3	3	3	3	3	3	3	3	2	2
9am-10am	3	3	3	3	3	3	3	3	3	3	3	3	2	2
10am-11am	2	3	2	3	2	3	3	3	3	3	3	3	3	2
11am-12pm	2	3	2	3	2	3	3	3	3	3	3	3	3	3
12pm-1pm	3	3	3	3	3	3	3	3	3	3	3	3	3	3
1pm-2pm	3	3	3	3	3	3	3	3	3	3	3	3	3	3
2pm-3pm	3	3	3	3	3	3	3	3	3	3	3	3	3	3
3pm-4pm	3	3	3	3	3	3	3	3	3	3	3	3	3	3
4pm-5pm	3	3	3	3	3	3	3	3	3	3	3	3	3	3
5pm-6pm	3	3	3	3	3	3	3	3	3	3	3	3	3	3
6pm-7pm	3	3	3	3	3	3	3	3	3	3	3	3	3	3
7pm-8pm	3	2	3	2	3	2	3	3	3	3	2	3	3	3
8pm-9pm	2	2	2	2	2	2	2	2	3	2	2	2	3	3
9pm-10pm	2	2	2	2	2	2	2	2	3	2	2	2	2	3
10pm-11pm	1	2	1	2	1	2	2	2	2	2	2	2	2	2
11pm-12am	1	1	1	1	1	1	1	1	2	1	1	1	1	2

Chart 5 – 2005-07 Revised 04/28/05

NOTES:

1) THE NEW YORK STATE THRUWAY IS A LIMITED ACCESS, HIGH-SPEED, HIGH-VOLUME HIGHWAY. TRAFFIC SHALL BE MAINTAINED IN ACCORDANCE WITH THE *MANUAL ON UNIFORM TRAFFIC CONTROL DEVICES (MUTCD),* THE *WORK ZONE TRAFFIC CONTROL PLANS*, AND THE *STANDARD SPECIFICATIONS* SECTION 619 AS AMENDED BY THE AUTHORITY.

2) LANE CLOSURES ON THE THRUWAY SHALL ONLY BE ALLOWED IN ACCORDANCE WITH THESE TRAFFIC MANAGEMENT TABLE(S), UNLESS INDICATED OTHERWISE IN THE CONTRACT PLANS OR PROPOSAL DOCUMENTS.

3) IF THE TRAFFIC MANAGEMENT TABLE(S) INDICATE THERE ARE NO LANES AVAILABLE FOR CLOSURE WITHIN A CERTAIN TIME PERIOD, WORK IN SHOULDER CLOSURES (SHORT-DURATION, MOBILE AND SHORT- OR INTERMEDIATE-TERM) WILL ALSO BE PROHIBITED DURING THIS TIME. IF MORE THAN ONE TABLE IS APPLICABLE TO A WORK ZONE LOCATION, THE MOST RESTRICTIVE REQUIREMENTS SHALL BE USED. TRAFFIC MANAGEMENT TABLES DO NOT GUARANTEE LANE CLOSURE AVAILABILITY; THE REQUIREMENTS OF SECTION B. *WORK RESTRICTIONS* SHALL SUPERSEDE THESE TABLES, WHEN APPLICABLE.

NEW YORK STATE OF OPPORTUNITY. Thruway Authority

U.S. CUSTOMARY STANDARD SHEET

LANE CLOSURE CHARTS
NEW YORK DIVISION
(SHEET 7 OF 26)

APPROVED MAY 1, 2019

/S/ PATRICK THOMPSON, P.E.
DIRECTOR DESIGN SUPPORT
SERVICES BUREAU

ISSUED UNDER DB 19-001

TA 619-30

I-87: SPRING VALLEY - INT. 15 (SUFFERN) (MP 24.3 - MP 31) **SPRING SEASON Mar. 1 Thru May 10**														
LANES REQUIRED TO BE MAINTAINED FOR TRAFFIC MANAGEMENT BY DAY OF WEEK & TIME OF DAY														
Time of Day	Mon		Tue		Wed		Thur		Fri		Sat		Sun	
	N	S	N	S	N	S	N	S	N	S	N	S	N	S
12am-1am	1	1	1	1	1	1	1	1	1	1	1	1	1	1
1am-2am	1	1	1	1	1	1	1	1	1	1	1	1	1	1
2am-3am	1	1	1	1	1	1	1	1	1	1	1	1	1	1
3am-4am	1	1	1	1	1	1	1	1	1	1	1	1	1	1
4am-5am	1	1	1	1	1	1	1	1	1	1	1	1	1	1
5am-6am	2	2	2	1	2	1	2	1	1	1	1	1	1	1
6am-7am	3	3	3	3	3	3	3	3	3	3	1	1	1	1
7am-8am	3	3	3	3	3	3	3	3	3	3	2	2	1	1
8am-9am	3	3	3	3	3	3	3	3	3	3	2	2	2	1
9am-10am	3	3	3	3	3	3	3	3	3	3	2	2	2	2
10am-11am	2	2	2	2	2	2	2	2	2	2	3	3	3	2
11am-12pm	2	2	2	2	2	2	2	2	3	2	3	3	3	3
12pm-1pm	2	2	2	2	2	2	2	2	3	2	3	3	3	3
1pm-2pm	2	2	2	2	2	2	2	2	3	2	3	3	3	3
2pm-3pm	2	2	2	2	2	2	3	2	3	3	3	3	3	3
3pm-4pm	3	2	3	2	3	2	3	3	3	3	3	3	3	3
4pm-5pm	3	3	3	3	3	3	3	3	3	3	3	3	3	3
5pm-6pm	3	3	3	3	3	3	3	3	3	3	3	3	3	3
6pm-7pm	3	3	3	3	3	3	3	3	3	3	3	3	3	3
7pm-8pm	2	2	3	2	3	2	3	2	3	3	2	3	3	3
8pm-9pm	2	2	2	2	2	2	2	2	3	2	2	2	2	3
9pm-10pm	2	1	1	1	1	1	2	2	2	2	2	2	2	2
10pm-11pm	1	1	1	1	1	1	1	1	2	2	1	1	2	2
11pm-12am	1	1	1	1	1	1	1	1	1	1	1	1	1	1

Chart 6 Revised 02/28/13

I-87: SPRING VALLEY - INT. 15 (SUFFERN) (MP 24.3 - MP 31) **SUMMER SEASON May 11 Thru Sept. 15**														
LANES REQUIRED TO BE MAINTAINED FOR TRAFFIC MANAGEMENT BY DAY OF WEEK & TIME OF DAY														
Time of Day	Mon		Tue		Wed		Thur		Fri		Sat		Sun	
	N	S	N	S	N	S	N	S	N	S	N	S	N	S
12am-1am	1	1	1	1	1	1	1	1	1	1	1	1	1	1
1am-2am	1	1	1	1	1	1	1	1	1	1	1	1	1	1
2am-3am	1	1	1	1	1	1	1	1	1	1	1	1	1	1
3am-4am	1	1	1	1	1	1	1	1	1	1	1	1	1	1
4am-5am	1	1	1	1	1	1	1	1	1	1	1	1	1	1
5am-6am	2	2	1	1	1	1	1	1	1	1	1	1	1	1
6am-7am	3	3	3	3	3	3	3	3	3	3	1	1	1	1
7am-8am	3	3	3	3	3	3	3	3	3	3	2	2	1	1
8am-9am	3	3	3	3	3	3	3	3	3	3	2	2	2	2
9am-10am	2	3	2	3	2	3	3	3	2	3	2	3	2	2
10am-11am	2	3	2	2	2	2	2	2	2	2	3	3	3	2
11am-12pm	2	3	2	2	2	2	2	2	3	2	3	3	3	3
12pm-1pm	2	3	2	2	2	2	2	2	3	2	3	3	3	3
1pm-2pm	2	3	2	2	2	2	2	2	3	2	3	3	3	3
2pm-3pm	2	3	2	2	2	2	3	3	3	3	3	3	3	3
3pm-4pm	3	3	3	3	3	3	3	3	3	3	3	3	3	3
4pm-5pm	3	3	3	3	3	3	3	3	3	3	3	3	3	3
5pm-6pm	3	3	3	3	3	3	3	3	3	3	3	3	3	3
6pm-7pm	3	3	3	3	3	3	3	3	3	3	2	3	3	3
7pm-8pm	2	2	3	2	3	2	3	3	3	2	2	3	3	3
8pm-9pm	2	2	2	2	2	2	2	2	3	2	2	2	3	3
9pm-10pm	2	1	2	1	1	1	2	2	2	2	2	2	3	2
10pm-11pm	1	1	1	1	1	1	1	1	2	1	1	1	2	2
11pm-12am	1	1	1	1	1	1	1	1	1	1	1	1	2	1

Chart 6 Revised 02/28/13

NOTES:

1) THE NEW YORK STATE THRUWAY IS A LIMITED ACCESS, HIGH-SPEED, HIGH-VOLUME HIGHWAY. TRAFFIC SHALL BE MAINTAINED IN ACCORDANCE WITH THE *MANUAL ON UNIFORM TRAFFIC CONTROL DEVICES (MUTCD)*, THE *WORK ZONE TRAFFIC CONTROL PLANS*, AND THE *STANDARD SPECIFICATIONS* SECTION 619 AS AMENDED BY THE AUTHORITY.

2) LANE CLOSURES ON THE THRUWAY SHALL ONLY BE ALLOWED IN ACCORDANCE WITH THESE TRAFFIC MANAGEMENT TABLE(S), UNLESS INDICATED OTHERWISE IN THE CONTRACT PLANS OR PROPOSAL DOCUMENTS.

3) IF THE TRAFFIC MANAGEMENT TABLE(S) INDICATE THERE ARE NO LANES AVAILABLE FOR CLOSURE WITHIN A CERTAIN TIME PERIOD, WORK IN SHOULDER CLOSURES (SHORT-DURATION, MOBILE AND SHORT- OR INTERMEDIATE-TERM) WILL ALSO BE PROHIBITED DURING THIS TIME. IF MORE THAN ONE TABLE IS APPLICABLE TO A WORK ZONE LOCATION, THE MOST RESTRICTIVE REQUIREMENTS SHALL BE USED. TRAFFIC MANAGEMENT TABLES DO NOT GUARANTEE LANE CLOSURE AVAILABILITY; THE REQUIREMENTS OF SECTION B. *WORK RESTRICTIONS* SHALL SUPERSEDE THESE TABLES, WHEN APPLICABLE.

NEW YORK STATE OF OPPORTUNITY. Thruway Authority

U.S. CUSTOMARY STANDARD SHEET

LANE CLOSURE CHARTS
NEW YORK DIVISION
(SHEET 8 OF 26)

APPROVED MAY 1, 2019

/S/ PATRICK THOMPSON, P.E.
DIRECTOR DESIGN SUPPORT SERVICES BUREAU

ISSUED UNDER DB 19-001

TA 619-30

I-87: SPRING VALLEY - INT. 15 (SUFFERN) (MP 24.3 - MP 31) FALL SEASON Sept. 16 Thru Nov. 30														
LANES REQUIRED TO BE MAINTAINED FOR TRAFFIC MANAGEMENT BY DAY OF WEEK & TIME OF DAY														
Time of Day	Mon		Tue		Wed		Thur		Fri		Sat		Sun	
	N	S	N	S	N	S	N	S	N	S	N	S	N	S
12am-1am	1	1	1	1	1	1	1	1	1	1	1	1	1	1
1am-2am	1	1	1	1	1	1	1	1	1	1	1	1	1	1
2am-3am	1	1	1	1	1	1	1	1	1	1	1	1	1	1
3am-4am	1	1	1	1	1	1	1	1	1	1	1	1	1	1
4am-5am	1	1	1	1	1	1	1	1	1	1	1	1	1	1
5am-6am	2	2	2	1	2	1	2	1	2	1	1	1	1	1
6am-7am	3	3	3	3	3	3	3	3	3	3	2	1	1	1
7am-8am	3	3	3	3	3	3	3	3	3	3	2	2	1	1
8am-9am	3	3	3	3	3	3	3	3	3	3	2	2	2	1
9am-10am	2	3	2	3	2	3	2	3	2	3	2	2	2	2
10am-11am	2	3	2	2	2	2	2	2	2	2	3	3	3	2
11am-12pm	2	3	2	2	2	2	2	2	3	2	3	3	3	3
12pm-1pm	2	3	2	2	2	2	2	2	3	2	3	3	3	3
1pm-2pm	2	3	2	2	2	2	2	2	3	2	3	3	3	3
2pm-3pm	2	3	2	2	2	3	3	2	3	3	3	3	3	3
3pm-4pm	3	3	3	3	3	3	3	3	3	3	3	3	3	3
4pm-5pm	3	3	3	3	3	3	3	3	3	3	3	3	3	3
5pm-6pm	3	3	3	3	3	3	3	3	3	3	3	3	3	3
6pm-7pm	3	3	3	3	3	3	3	3	3	3	3	3	3	3
7pm-8pm	2	2	3	2	3	2	3	2	3	3	2	3	3	3
8pm-9pm	2	2	2	2	2	2	2	2	3	2	2	2	2	3
9pm-10pm	1	2	1	2	1	2	2	2	2	2	2	2	2	2
10pm-11pm	1	2	1	1	1	1	1	2	2	2	1	1	2	2
11pm-12am	1	1	1	1	1	1	1	1	1	1	1	1	1	1

Chart 6 Revised 02/28/13

I-87: SPRING VALLEY - INT. 15 (SUFFERN) (MP 24.3 - MP 31) WINTER SEASON Dec. 1 through Feb. 29														
LANES REQUIRED TO BE MAINTAINED FOR TRAFFIC MANAGEMENT BY DAY OF WEEK & TIME OF DAY														
Time of Day	Mon		Tue		Wed		Thur		Fri		Sat		Sun	
	N	S	N	S	N	S	N	S	N	S	N	S	N	S
12am-1am	1	1	1	1	1	1	1	1	1	1	1	1	1	1
1am-2am	1	1	1	1	1	1	1	1	1	1	1	1	1	1
2am-3am	1	1	1	1	1	1	1	1	1	1	1	1	1	1
3am-4am	1	1	1	1	1	1	1	1	1	1	1	1	1	1
4am-5am	1	1	1	1	1	1	1	1	1	1	1	1	1	1
5am-6am	2	2	2	1	2	1	2	1	1	1	1	1	1	1
6am-7am	3	3	3	3	3	3	3	3	3	3	1	1	1	1
7am-8am	3	3	3	3	3	3	3	3	3	3	2	2	2	1
8am-9am	3	3	3	3	3	3	3	3	3	3	2	2	2	1
9am-10am	2	3	2	3	2	3	2	3	2	3	2	2	2	2
10am-11am	2	2	2	2	2	2	2	2	2	2	3	3	3	2
11am-12pm	2	2	2	2	2	2	2	2	3	2	3	3	3	3
12pm-1pm	2	2	2	2	2	2	2	2	3	2	3	3	3	3
1pm-2pm	2	2	2	2	2	2	2	2	3	3	3	3	3	3
2pm-3pm	2	2	2	2	2	2	3	2	3	3	3	3	3	3
3pm-4pm	3	3	3	3	3	3	3	3	3	3	3	3	3	3
4pm-5pm	3	3	3	3	3	3	3	3	3	3	3	3	3	3
5pm-6pm	3	3	3	3	3	3	3	3	3	3	2	3	3	3
6pm-7pm	3	3	3	3	3	3	3	3	3	3	2	3	3	3
7pm-8pm	2	2	3	2	3	2	3	2	3	2	2	3	3	3
8pm-9pm	2	2	2	2	2	2	2	2	3	2	2	2	2	3
9pm-10pm	1	1	1	1	1	1	2	2	2	2	2	2	2	2
10pm-11pm	1	1	1	1	1	1	1	1	2	1	1	1	1	2
11pm-12am	1	1	1	1	1	1	1	1	1	1	1	1	1	1

Chart 6 Revised 02/28/13

NOTES:

1) THE NEW YORK STATE THRUWAY IS A LIMITED ACCESS, HIGH-SPEED, HIGH-VOLUME HIGHWAY. TRAFFIC SHALL BE MAINTAINED IN ACCORDANCE WITH THE *MANUAL ON UNIFORM TRAFFIC CONTROL DEVICES (MUTCD)*, THE *WORK ZONE TRAFFIC CONTROL PLANS*, AND THE *STANDARD SPECIFICATIONS* SECTION 619 AS AMENDED BY THE AUTHORITY.

2) LANE CLOSURES ON THE THRUWAY SHALL ONLY BE ALLOWED IN ACCORDANCE WITH THESE TRAFFIC MANAGEMENT TABLE(S), UNLESS INDICATED OTHERWISE IN THE CONTRACT PLANS OR PROPOSAL DOCUMENTS.

3) IF THE TRAFFIC MANAGEMENT TABLE(S) INDICATE THERE ARE NO LANES AVAILABLE FOR CLOSURE WITHIN A CERTAIN TIME PERIOD, WORK IN SHOULDER CLOSURES (SHORT-DURATION, MOBILE AND SHORT- OR INTERMEDIATE-TERM) WILL ALSO BE PROHIBITED DURING THIS TIME. IF MORE THAN ONE TABLE IS APPLICABLE TO A WORK ZONE LOCATION, THE MOST RESTRICTIVE REQUIREMENTS SHALL BE USED. TRAFFIC MANAGEMENT TABLES DO NOT GUARANTEE LANE CLOSURE AVAILABILITY; THE REQUIREMENTS OF SECTION B. *WORK RESTRICTIONS* SHALL SUPERSEDE THESE TABLES, WHEN APPLICABLE.

NEW YORK STATE OF OPPORTUNITY. Thruway Authority

U.S. CUSTOMARY STANDARD SHEET

LANE CLOSURE CHARTS
NEW YORK DIVISION
(SHEET 9 OF 26)

APPROVED MAY 1, 2019

/S/ PATRICK THOMPSON, P.E.
DIRECTOR DESIGN SUPPORT SERVICES BUREAU

ISSUED UNDER DB 19-001

TA 619-30

I-87: SUFFERN TO WOODBURY, INT 16 (MP 31 - 45) SPRING SEASON March 1 – May 10														
LANES REQUIRED TO BE MAINTAINED FOR TRAFFIC MANAGEMENT BY DAY OF WEEK & TIME OF DAY														
Time of Day	Mon		Tue		Wed		Thur		Fri		Sat		Sun	
	N	S	N	S	N	S	N	S	N	S	N	S	N	S
12am-1am	1	1	1	1	1	1	1	1	1	1	1	1	1	1
1am-2am	1	1	1	1	1	1	1	1	1	1	1	1	1	1
2am-3am	1	1	1	1	1	1	1	1	1	1	1	1	1	1
3am-4am	1	1	1	1	1	1	1	1	1	1	1	1	1	1
4am-5am	1	1	1	1	1	1	1	1	1	1	1	1	1	1
5am-6am	1	2	1	2	1	2	1	2	1	2	1	1	1	1
6am-7am	1	3	1	3	1	3	1	3	1	3	1	1	1	1
7am-8am	2	3	2	3	2	3	2	3	2	3	2	2	1	1
8am-9am	2	3	2	3	2	3	2	3	2	3	2	2	1	2
9am-10am	2	2	2	2	2	2	2	2	2	2	2	2	2	2
10am-11am	2	2	2	2	2	2	2	2	2	2	3	2	3	2
11am-12pm	2	2	2	2	2	2	2	2	2	2	3	2	3	3
12pm-1pm	2	2	2	2	2	2	2	2	3	2	3	3	3	3
1pm-2pm	2	2	2	2	2	2	2	2	3	2	3	3	3	3
2pm-3pm	2	2	2	2	2	2	2	2	3	2	3	3	3	3
3pm-4pm	3	2	3	2	3	2	3	2	3	3	3	3	3	3
4pm-5pm	3	2	3	2	3	2	3	2	3	3	3	3	2	3
5pm-6pm	3	2	3	2	3	2	3	2	3	3	2	3	2	3
6pm-7pm	3	2	3	2	3	2	3	2	3	2	2	3	2	3
7pm-8pm	2	2	2	2	2	2	2	2	3	2	2	2	2	3
8pm-9pm	2	1	2	1	2	1	2	1	3	2	2	2	2	3
9pm-10pm	2	1	2	1	2	1	2	1	2	1	2	2	2	2
10pm-11pm	1	1	1	1	1	1	1	1	2	1	2	1	1	2
11pm-12am	1	1	1	1	1	1	1	1	2	1	1	1	1	1

Chart 7 Revised 02/28/13

I-87: SUFFERN TO WOODBURY, INT 16 (MP 31 - 45) SUMMER Season May 11 through Sept. 15														
LANES REQUIRED TO BE MAINTAINED FOR TRAFFIC MANAGEMENT BY DAY OF WEEK & TIME OF DAY														
Time of Day	Mon		Tue		Wed		Thur		Fri		Sat		Sun	
	N	S	N	S	N	S	N	S	N	S	N	S	N	S
12am-1am	1	1	1	1	1	1	1	1	1	1	1	1	1	1
1am-2am	1	1	1	1	1	1	1	1	1	1	1	1	1	1
2am-3am	1	1	1	1	1	1	1	1	1	1	1	1	1	1
3am-4am	1	1	1	1	1	1	1	1	1	1	1	1	1	1
4am-5am	1	1	1	1	1	1	1	1	1	1	1	1	1	1
5am-6am	1	2	1	2	1	2	1	2	1	2	1	1	1	1
6am-7am	1	3	1	3	1	3	1	3	1	3	1	1	1	1
7am-8am	2	3	2	3	2	3	2	3	2	3	2	2	1	1
8am-9am	2	3	2	3	2	3	2	3	2	3	3	2	2	2
9am-10am	2	3	2	2	2	2	2	2	2	2	3	2	2	2
10am-11am	2	3	2	2	2	2	2	2	3	2	3	2	3	3
11am-12pm	3	3	2	2	2	2	3	2	3	2	3	3	3	3
12pm-1pm	3	3	2	2	2	2	3	2	3	2	3	3	3	3
1pm-2pm	3	3	2	2	2	2	3	2	3	3	3	3	3	3
2pm-3pm	3	3	3	2	3	2	3	2	3	3	3	3	3	3
3pm-4pm	3	3	3	2	3	2	3	2	3	3	3	3	3	3
4pm-5pm	3	3	3	2	3	2	3	2	3	3	3	3	3	3
5pm-6pm	3	3	3	2	3	2	3	2	3	3	3	3	3	3
6pm-7pm	3	3	3	2	3	2	3	2	3	2	3	3	3	3
7pm-8pm	2	3	2	2	2	2	3	2	3	2	3	3	2	3
8pm-9pm	2	2	2	2	2	2	3	2	3	2	2	2	2	3
9pm-10pm	2	2	2	1	2	1	2	2	3	2	2	2	2	3
10pm-11pm	2	2	2	1	2	1	2	1	2	1	2	2	2	3
11pm-12am	2	1	2	1	2	1	2	1	2	1	1	2	1	2

Chart 7 Revised 02/28/13

NOTES:

1) THE NEW YORK STATE THRUWAY IS A LIMITED ACCESS, HIGH-SPEED, HIGH-VOLUME HIGHWAY. TRAFFIC SHALL BE MAINTAINED IN ACCORDANCE WITH THE *MANUAL ON UNIFORM TRAFFIC CONTROL DEVICES (MUTCD),* THE *WORK ZONE TRAFFIC CONTROL PLANS*, AND THE *STANDARD SPECIFICATIONS* SECTION 619 AS AMENDED BY THE AUTHORITY.

2) LANE CLOSURES ON THE THRUWAY SHALL ONLY BE ALLOWED IN ACCORDANCE WITH THESE TRAFFIC MANAGEMENT TABLE(S), UNLESS INDICATED OTHERWISE IN THE CONTRACT PLANS OR PROPOSAL DOCUMENTS.

NEW YORK STATE OF OPPORTUNITY. Thruway Authority

U.S. CUSTOMARY STANDARD SHEET

LANE CLOSURE CHARTS
NEW YORK DIVISION
(SHEET 10 OF 26)

APPROVED MAY 1, 2019

/S/ PATRICK THOMPSON, P.E.
DIRECTOR DESIGN SUPPORT
SERVICES BUREAU

ISSUED UNDER DB 19-001

TA 619-30

I-87: SUFFERN TO WOODBURY, INT 16 (MP 31 - 45) FALL SEASON Sept. 16 – Nov. 30														
LANES REQUIRED TO BE MAINTAINED FOR TRAFFIC MANAGEMENT BY DAY OF WEEK & TIME OF DAY														
Time of Day	Mon		Tue		Wed		Thur		Fri		Sat		Sun	
	N	S	N	S	N	S	N	S	N	S	N	S	N	S
12am-1am	1	1	1	1	1	1	1	1	1	1	1	1	1	1
1am-2am	1	1	1	1	1	1	1	1	1	1	1	1	1	1
2am-3am	1	1	1	1	1	1	1	1	1	1	1	1	1	1
3am-4am	1	1	1	1	1	1	1	1	1	1	1	1	1	1
4am-5am	1	1	1	1	1	1	1	1	1	1	1	1	1	1
5am-6am	1	2	1	2	1	2	1	2	1	2	1	1	1	1
6am-7am	1	3	1	3	1	3	1	3	1	3	1	1	1	1
7am-8am	2	3	2	3	2	3	2	3	2	3	2	2	2	1
8am-9am	2	3	2	3	2	3	2	3	2	3	3	2	2	1
9am-10am	2	3	2	2	2	2	2	2	2	2	3	2	3	2
10am-11am	2	3	2	2	2	2	2	2	3	2	3	2	3	3
11am-12pm	2	3	2	2	2	2	3	2	3	2	3	3	3	3
12pm-1pm	2	3	2	2	2	2	3	2	3	2	3	3	3	3
1pm-2pm	2	3	3	2	2	2	3	2	3	2	3	3	3	3
2pm-3pm	3	3	3	2	3	2	3	2	3	3	3	3	3	3
3pm-4pm	3	3	3	2	3	2	3	2	3	3	3	3	3	3
4pm-5pm	3	3	3	2	3	2	3	2	3	3	3	3	3	3
5pm-6pm	3	3	3	2	3	2	3	2	3	3	3	3	3	3
6pm-7pm	3	2	3	2	3	2	3	2	3	2	3	3	3	3
7pm-8pm	2	2	2	2	2	2	3	2	3	2	3	3	2	3
8pm-9pm	2	2	2	2	2	2	3	2	3	2	2	2	2	3
9pm-10pm	2	1	2	1	2	1	2	2	3	2	2	2	2	3
10pm-11pm	2	1	2	1	2	1	2	1	2	1	2	2	2	3
11pm-12am	2	1	2	1	2	1	2	1	2	1	1	1	1	2

Chart 7 Revised 02/28/13

I-87: SUFFERN TO WOODBURY, INT 16 (MP 31 - 45) WINTER Season Dec. 1 through Feb. 29														
LANES REQUIRED TO BE MAINTAINED FOR TRAFFIC MANAGEMENT BY DAY OF WEEK & TIME OF DAY														
Time of Day	Mon		Tue		Wed		Thur		Fri		Sat		Sun	
	N	S	N	S	N	S	N	S	N	S	N	S	N	S
12am-1am	1	1	1	1	1	1	1	1	1	1	1	1	1	1
1am-2am	1	1	1	1	1	1	1	1	1	1	1	1	1	1
2am-3am	1	1	1	1	1	1	1	1	1	1	1	1	1	1
3am-4am	1	1	1	1	1	1	1	1	1	1	1	1	1	1
4am-5am	1	1	1	1	1	1	1	1	1	1	1	1	1	1
5am-6am	1	2	1	2	1	2	1	2	1	2	1	1	1	1
6am-7am	1	3	1	3	1	3	1	3	1	3	1	1	1	1
7am-8am	2	3	2	3	2	3	2	3	2	3	2	2	1	1
8am-9am	2	3	2	3	2	3	2	3	2	3	2	2	1	2
9am-10am	2	2	2	2	2	2	2	2	2	2	2	2	2	2
10am-11am	2	2	2	2	2	2	2	2	2	2	3	2	3	2
11am-12pm	2	2	2	2	2	2	2	2	2	2	3	2	3	3
12pm-1pm	2	2	2	2	2	2	2	2	3	2	3	3	3	3
1pm-2pm	2	2	2	2	2	2	2	2	3	2	3	3	3	3
2pm-3pm	2	2	2	2	2	2	2	2	3	2	3	3	3	3
3pm-4pm	3	2	3	2	3	2	3	2	3	2	3	3	3	3
4pm-5pm	3	2	3	2	3	2	3	2	3	2	3	3	2	3
5pm-6pm	3	2	3	2	3	2	3	2	3	2	2	3	2	3
6pm-7pm	3	2	3	2	3	2	3	2	3	2	2	3	2	3
7pm-8pm	2	2	2	2	2	2	2	2	3	2	2	2	2	3
8pm-9pm	2	2	2	2	2	2	2	2	3	2	2	2	2	3
9pm-10pm	2	1	2	1	2	1	2	1	2	2	2	2	2	2
10pm-11pm	1	1	1	1	1	1	1	1	2	1	2	1	1	1
11pm-12am	1	1	1	1	1	1	1	1	2	1	1	1	1	1

Chart 7 Revised 02/28/13

NOTES:

1) THE NEW YORK STATE THRUWAY IS A LIMITED ACCESS, HIGH-SPEED, HIGH-VOLUME HIGHWAY. TRAFFIC SHALL BE MAINTAINED IN ACCORDANCE WITH THE *MANUAL ON UNIFORM TRAFFIC CONTROL DEVICES (MUTCD),* THE *WORK ZONE TRAFFIC CONTROL PLANS*, AND THE *STANDARD SPECIFICATIONS* SECTION 619 AS AMENDED BY THE AUTHORITY.

2) LANE CLOSURES ON THE THRUWAY SHALL ONLY BE ALLOWED IN ACCORDANCE WITH THESE TRAFFIC MANAGEMENT TABLE(S), UNLESS INDICATED OTHERWISE IN THE CONTRACT PLANS OR PROPOSAL DOCUMENTS.

NEW YORK STATE OF OPPORTUNITY. Thruway Authority

U.S. CUSTOMARY STANDARD SHEET

LANE CLOSURE CHARTS
NEW YORK DIVISION
(SHEET 11 OF 26)

APPROVED MAY 1, 2019

/S/ PATRICK THOMPSON, P.E.
DIRECTOR DESIGN SUPPORT
SERVICES BUREAU

ISSUED UNDER DB 19-001

TA 619-30

I-87: Exit 16 (*ND/SA Ramps) SPRING SEASON March 1 through May 10														
LANES REQUIRED TO BE MAINTAINED FOR TRAFFIC MANAGEMENT BY DAY OF WEEK & TIME OF DAY														
Time of Day	Mon		Tue		Wed		Thur		Fri		Sat		Sun	
	N-D	S-A	N-D	S-A	N-D	S-A	N-D	S-A	N-D	S-A	N-D	S-A	N-D	S-A
12am-1am	1	1	1	1	1	1	1	1	1	1	1	1	1	1
1am-2am	1	1	1	1	1	1	1	1	1	1	1	1	1	1
2am-3am	1	1	1	1	1	1	1	1	1	1	1	1	1	1
3am-4am	1	1	1	1	1	1	1	1	1	1	1	1	1	1
4am-5am	1	1	1	1	1	1	1	1	1	1	1	1	1	1
5am-6am	1	2	1	2	1	2	1	2	1	2	1	1	1	1
6am-7am	1	2	1	2	1	2	1	2	1	2	1	1	1	1
7am-8am	1	2	1	2	1	2	1	2	1	2	1	1	1	1
8am-9am	1	2	1	2	1	2	1	2	1	2	1	1	1	1
9am-10am	1	2	1	2	1	2	1	2	1	2	1	1	1	1
10am-11am	1	1	1	1	1	1	1	1	1	1	2	1	1	1
11am-12pm	1	1	1	1	1	1	1	1	1	1	2	1	2	2
12pm-1pm	1	1	1	1	1	1	1	1	2	1	2	2	2	2
1pm-2pm	1	1	1	1	1	1	1	1	2	1	2	2	2	2
2pm-3pm	1	1	1	1	1	1	1	1	2	1	2	2	2	2
3pm-4pm	2	1	2	1	2	1	2	1	2	1	2	2	2	2
4pm-5pm	2	1	2	1	2	1	2	1	2	1	2	2	1	2
5pm-6pm	2	1	2	1	2	1	2	1	2	1	2	2	1	2
6pm-7pm	2	1	2	1	2	1	2	1	2	1	1	2	1	2
7pm-8pm	2	1	2	1	2	1	2	1	2	1	1	2	1	2
8pm-9pm	1	1	1	1	1	1	1	1	1	1	1	1	1	1
9pm-10pm	1	1	1	1	1	1	1	1	1	1	1	1	1	1
10pm-11pm	1	1	1	1	1	1	1	1	1	1	1	1	1	1
11pm-12am	1	1	1	1	1	1	1	1	1	1	1	1	1	1

Chart. Exit 16 – 4/10/2018
*ND - Northbound Deceleration Ramp
SA - Southbound Acceleration Ramp

I-87: Exit 16 (*ND/SA Ramps) SUMMER SEASON May 11 through Sept. 15														
LANES REQUIRED TO BE MAINTAINED FOR TRAFFIC MANAGEMENT BY DAY OF WEEK & TIME OF DAY														
Time of Day	Mon		Tue		Wed		Thur		Fri		Sat		Sun	
	N-D	S-A	N-D	S-A	N-D	S-A	N-D	S-A	N-D	S-A	N-D	S-A	N-D	S-A
12am-1am	1	1	1	1	1	1	1	1	1	1	1	1	1	1
1am-2am	1	1	1	1	1	1	1	1	1	1	1	1	1	1
2am-3am	1	1	1	1	1	1	1	1	1	1	1	1	1	1
3am-4am	1	1	1	1	1	1	1	1	1	1	1	1	1	1
4am-5am	1	1	1	1	1	1	1	1	1	1	1	1	1	1
5am-6am	1	2	1	2	1	2	1	2	1	2	1	1	1	1
6am-7am	1	2	1	2	1	2	1	2	1	2	1	1	1	1
7am-8am	1	2	1	2	1	2	1	2	1	2	1	1	1	1
8am-9am	1	2	1	2	1	2	1	2	1	2	2	1	1	1
9am-10am	1	2	1	2	1	2	1	2	2	2	2	1	2	1
10am-11am	1	2	1	2	1	1	1	1	2	1	2	1	2	2
11am-12pm	1	2	1	2	1	1	2	1	2	1	2	2	2	2
12pm-1pm	1	2	1	1	1	1	2	1	2	1	2	2	2	2
1pm-2pm	1	2	1	1	1	1	2	1	2	2	2	2	2	2
2pm-3pm	2	2	2	1	2	1	2	1	2	2	2	2	2	2
3pm-4pm	2	2	2	1	2	1	2	1	2	2	2	2	2	2
4pm-5pm	2	1	2	1	2	1	2	1	2	1	2	2	2	2
5pm-6pm	2	1	2	1	2	1	2	1	2	1	2	2	1	2
6pm-7pm	2	1	2	1	2	1	2	1	2	1	1	2	1	2
7pm-8pm	2	1	2	1	2	1	2	1	2	1	1	2	1	2
8pm-9pm	1	1	1	1	1	1	2	1	2	1	1	2	1	2
9pm-10pm	1	1	1	1	1	1	2	1	1	1	1	2	1	2
10pm-11pm	1	1	1	1	1	1	2	1	1	1	1	1	1	2
11pm-12am	1	1	1	1	1	1	1	1	1	1	1	1	1	2

Chart. Exit 16 – 4/10/2018
*ND - Northbound Deceleration Ramp
SA - Southbound Acceleration Ramp

NOTES:

1) THE NEW YORK STATE THRUWAY IS A LIMITED ACCESS, HIGH-SPEED, HIGH-VOLUME HIGHWAY. TRAFFIC SHALL BE MAINTAINED IN ACCORDANCE WITH THE *MANUAL ON UNIFORM TRAFFIC CONTROL DEVICES (MUTCD)*, THE *WORK ZONE TRAFFIC CONTROL PLANS*, AND THE *STANDARD SPECIFICATIONS* SECTION 619 AS AMENDED BY THE AUTHORITY.

2) LANE CLOSURES ON THE THRUWAY SHALL ONLY BE ALLOWED IN ACCORDANCE WITH THESE TRAFFIC MANAGEMENT TABLE(S), UNLESS INDICATED OTHERWISE IN THE CONTRACT PLANS OR PROPOSAL DOCUMENTS.

NEW YORK STATE OF OPPORTUNITY. Thruway Authority

U.S. CUSTOMARY STANDARD SHEET

LANE CLOSURE CHARTS
NEW YORK DIVISION
(SHEET 12 OF 26)

APPROVED MAY 1, 2019

/S/ PATRICK THOMPSON, P.E.
DIRECTOR DESIGN SUPPORT
SERVICES BUREAU

ISSUED UNDER DB 19-001

TA 619-30

I-87: EXIT 16 (*ND/SA RAMPS) FALL SEASON Sept. 16 through Nov. 30														
LANES REQUIRED TO BE MAINTAINED FOR TRAFFIC MANAGEMENT BY DAY OF WEEK & TIME OF DAY														
Time of Day	Mon		Tue		Wed		Thur		Fri		Sat		Sun	
	N-D	S-A	N-D	S-A	N-D	S-A	N-D	S-A	N-D	S-A	N-D	S-A	N-D	S-A
12am-1am	1	1	1	1	1	1	1	1	1	1	1	1	1	1
1am-2am	1	1	1	1	1	1	1	1	1	1	1	1	1	1
2am-3am	1	1	1	1	1	1	1	1	1	1	1	1	1	1
3am-4am	1	1	1	1	1	1	1	1	1	1	1	1	1	1
4am-5am	1	1	1	1	1	1	1	1	1	1	1	1	1	1
5am-6am	1	2	1	2	1	2	1	2	1	2	1	1	1	1
6am-7am	1	2	1	2	1	2	1	2	1	2	1	1	1	1
7am-8am	1	2	1	2	1	2	1	2	1	2	1	1	1	1
8am-9am	1	2	1	2	1	2	1	2	1	2	1	1	1	1
9am-10am	1	2	1	2	1	2	1	2	1	2	2	1	1	1
10am-11am	1	1	1	1	1	1	1	1	1	1	2	1	2	2
11am-12pm	1	1	1	1	1	1	1	1	2	1	2	1	2	2
12pm-1pm	1	1	1	1	1	1	1	1	2	1	2	2	2	2
1pm-2pm	1	1	1	1	1	1	1	1	2	2	2	2	2	2
2pm-3pm	1	1	1	1	1	1	2	1	2	2	2	2	2	2
3pm-4pm	2	1	2	1	2	1	2	1	2	2	2	2	2	2
4pm-5pm	2	1	2	1	2	1	2	2	2	2	2	2	2	2
5pm-6pm	2	1	2	1	2	1	2	2	2	1	2	2	1	2
6pm-7pm	2	1	2	1	2	1	2	1	2	1	1	2	1	2
7pm-8pm	2	1	2	1	2	1	2	1	2	1	1	1	1	2
8pm-9pm	1	1	1	1	1	1	2	1	2	1	1	1	1	1
9pm-10pm	1	1	1	1	1	1	1	1	1	1	1	1	1	1
10pm-11pm	1	1	1	1	1	1	1	1	1	1	1	1	1	1
11pm-12am	1	1	1	1	1	1	1	1	1	1	1	1	1	1

Chart. Exit 16 – 4/10/2018
*ND - Northbound Deceleration Ramp
SA - Southbound Acceleration Ramp

I-87: EXIT 16 (*ND/SA Ramps) WINTER SEASON Dec. 1 through Feb. 28														
LANES REQUIRED TO BE MAINTAINED FOR TRAFFIC MANAGEMENT BY DAY OF WEEK & TIME OF DAY														
Time of Day	Mon		Tue		Wed		Thur		Fri		Sat		Sun	
	N-D	S-A	N-D	S-A	N-D	S-A	N-D	S-A	N-D	S-A	N-D	S-A	N-D	S-A
12am-1am	1	1	1	1	1	1	1	1	1	1	1	1	1	1
1am-2am	1	1	1	1	1	1	1	1	1	1	1	1	1	1
2am-3am	1	1	1	1	1	1	1	1	1	1	1	1	1	1
3am-4am	1	1	1	1	1	1	1	1	1	1	1	1	1	1
4am-5am	1	1	1	1	1	1	1	1	1	1	1	1	1	1
5am-6am	1	2	1	2	1	2	1	2	1	2	1	1	1	1
6am-7am	1	2	1	2	1	2	1	2	1	2	1	1	1	1
7am-8am	1	2	1	2	1	2	1	2	1	2	1	1	1	1
8am-9am	1	2	1	2	1	2	1	2	1	2	1	1	1	1
9am-10am	1	2	1	2	1	2	1	2	1	2	1	1	1	1
10am-11am	1	1	1	1	1	1	1	1	1	1	2	1	1	1
11am-12pm	1	1	1	1	1	1	1	1	1	1	2	1	1	2
12pm-1pm	1	1	1	1	1	1	1	1	1	1	2	1	2	2
1pm-2pm	1	1	1	1	1	1	1	1	1	1	2	1	2	2
2pm-3pm	1	1	1	1	1	1	1	1	2	1	2	1	1	2
3pm-4pm	2	1	2	1	2	1	2	1	2	1	2	2	1	2
4pm-5pm	2	1	2	1	2	1	2	1	2	1	2	2	1	2
5pm-6pm	2	1	2	1	2	1	2	1	2	1	1	2	1	2
6pm-7pm	2	1	2	1	2	1	2	1	2	1	1	1	1	2
7pm-8pm	2	1	2	1	2	1	2	1	2	1	1	1	1	1
8pm-9pm	1	1	1	1	1	1	1	1	1	1	1	1	1	1
9pm-10pm	1	1	1	1	1	1	1	1	1	1	1	1	1	1
10pm-11pm	1	1	1	1	1	1	1	1	1	1	1	1	1	1
11pm-12am	1	1	1	1	1	1	1	1	1	1	1	1	1	1

Chart. Exit 16 – 04/10/2018
*ND - Northbound Deceleration Ramp
SA - Southbound Acceleration Ramp

NOTES:

1) THE NEW YORK STATE THRUWAY IS A LIMITED ACCESS, HIGH-SPEED, HIGH-VOLUME HIGHWAY. TRAFFIC SHALL BE MAINTAINED IN ACCORDANCE WITH THE *MANUAL ON UNIFORM TRAFFIC CONTROL DEVICES (MUTCD)*, THE *WORK ZONE TRAFFIC CONTROL PLANS*, AND THE *STANDARD SPECIFICATIONS* SECTION 619 AS AMENDED BY THE AUTHORITY.

2) LANE CLOSURES ON THE THRUWAY SHALL ONLY BE ALLOWED IN ACCORDANCE WITH THESE TRAFFIC MANAGEMENT TABLE(S), UNLESS INDICATED OTHERWISE IN THE CONTRACT PLANS OR PROPOSAL DOCUMENTS.

NEW YORK STATE OF OPPORTUNITY. Thruway Authority

U.S. CUSTOMARY STANDARD SHEET

LANE CLOSURE CHARTS
NEW YORK DIVISION
(SHEET 13 OF 26)

APPROVED MAY 1, 2019

/S/ PATRICK THOMPSON, P.E.
DIRECTOR DESIGN SUPPORT
SERVICES BUREAU

ISSUED UNDER DB 19-001

TA 619-30

I-87: INT. 16 - INT. 17 (MP 45- MP 60.1) ***SUMMER/FALL SEASONS May 16 through October 31***

LANES REQUIRED TO BE MAINTAINED FOR TRAFFIC MANAGEMENT BY DAY OF WEEK & TIME OF DAY

Time of Day	Mon		Tue		Wed		Thur		Fri		Sat		Sun	
	N	S	N	S	N	S	N	S	N	S	N	S	N	S
12am-1am	1	1	1	1	1	1	1	1	1	1	1	1	1	1
1am-2am	1	1	1	1	1	1	1	1	1	1	1	1	1	1
2am-3am	1	1	1	1	1	1	1	1	1	1	1	1	1	1
3am-4am	1	1	1	1	1	1	1	1	1	1	1	1	1	1
4am-5am	1	1	1	1	1	1	1	1	1	1	1	1	1	1
5am-6am	1	1	1	1	1	1	1	1	1	1	1	1	1	1
6am-7am	1	1	1	1	1	1	1	1	1	1	1	1	1	1
7am-8am	1	2	1	2	1	2	1	2	2	2	2	1	1	1
8am-9am	1	2	1	2	1	2	1	2	2	2	2	1	1	1
9am-10am	1	2	1	1	1	1	2	1	2	2	2	2	2	2
10am-11am	2	2	1	1	2	1	2	1	2	2	2	2	2	2
11am-12pm	2	2	2	1	2	1	2	1	2	2	2	2	2	2
12pm-1pm	2	2	2	1	2	1	2	2	2	2	2	2	2	2
1pm-2pm	2	2	2	1	2	1	2	2	2	2	2	2	2	2
2pm-3pm	2	2	2	1	2	2	2	2	2	2	2	2	2	2
3pm-4pm	2	2	2	2	2	2	2	2	2	2	2	2	2	2
4pm-5pm	2	2	2	2	2	2	2	2	2	2	2	2	2	2
5pm-6pm	2	2	2	2	2	2	2	2	2	2	2	2	2	2
6pm-7pm	1	2	2	1	2	1	2	2	2	2	2	2	2	2
7pm-8pm	1	1	1	1	1	1	2	2	2	2	1	2	2	2
8pm-9pm	1	1	1	1	1	1	1	1	2	1	1	2	1	2
9pm-10pm	1	1	1	1	1	1	1	1	2	1	1	1	1	2
10pm-11pm	1	1	1	1	1	1	1	1	1	1	1	1	1	2
11pm-12am	1	1	1	1	1	1	1	1	1	1	1	1	1	1

Chart.8 – 09/19/07

I-87: INT. 16 - INT. 17 (MP 45- MP 60.1) ***WINTER/SPRING SEASONS Nov. 1 through May 15***

LANES REQUIRED TO BE MAINTAINED FOR TRAFFIC MANAGEMENT BY DAY OF WEEK & TIME OF DAY

Time of Day	Mon		Tue		Wed		Thur		Fri		Sat		Sun	
	N	S	N	S	N	S	N	S	N	S	N	S	N	S
12am-1am	1	1	1	1	1	1	1	1	1	1	1	1	1	1
1am-2am	1	1	1	1	1	1	1	1	1	1	1	1	1	1
2am-3am	1	1	1	1	1	1	1	1	1	1	1	1	1	1
3am-4am	1	1	1	1	1	1	1	1	1	1	1	1	1	1
4am-5am	1	1	1	1	1	1	1	1	1	1	1	1	1	1
5am-6am	1	1	1	1	1	1	1	1	1	1	1	1	1	1
6am-7am	1	1	1	1	1	1	1	1	1	1	1	1	1	1
7am-8am	1	2	1	2	1	2	1	2	1	2	1	1	1	1
8am-9am	1	2	1	2	1	2	1	2	1	2	1	1	1	1
9am-10am	1	1	1	1	1	1	1	1	1	1	1	1	1	1
10am-11am	1	1	1	1	1	1	1	1	1	1	2	1	1	1
11am-12pm	1	1	1	1	1	1	1	1	2	1	2	1	2	2
12pm-1pm	1	1	1	1	1	1	1	1	2	2	2	2	2	2
1pm-2pm	1	1	1	1	1	1	1	1	2	2	2	2	2	2
2pm-3pm	1	1	1	1	1	1	2	1	2	2	2	2	2	2
3pm-4pm	2	1	2	1	2	2	2	2	2	2	2	2	2	2
4pm-5pm	2	1	2	1	2	2	2	2	2	2	2	2	2	2
5pm-6pm	2	1	2	1	2	2	2	2	2	2	2	2	2	2
6pm-7pm	1	1	1	1	1	1	2	1	2	2	2	2	2	2
7pm-8pm	1	1	1	1	1	1	1	1	2	1	2	1	2	2
8pm-9pm	1	1	1	1	1	1	1	1	2	1	1	1	1	2
9pm-10pm	1	1	1	1	1	1	1	1	1	1	1	1	1	1
10pm-11pm	1	1	1	1	1	1	1	1	1	1	1	1	1	1
11pm-12am	1	1	1	1	1	1	1	1	1	1	1	1	1	1

Chart.8 – 09/19/07

NOTES:

1) THE NEW YORK STATE THRUWAY IS A LIMITED ACCESS, HIGH-SPEED, HIGH-VOLUME HIGHWAY. TRAFFIC SHALL BE MAINTAINED IN ACCORDANCE WITH THE *MANUAL ON UNIFORM TRAFFIC CONTROL DEVICES (MUTCD)*, THE *WORK ZONE TRAFFIC CONTROL PLANS*, AND THE *STANDARD SPECIFICATIONS* SECTION 619 AS AMENDED BY THE AUTHORITY.

2) LANE CLOSURES ON THE THRUWAY SHALL ONLY BE ALLOWED IN ACCORDANCE WITH THESE TRAFFIC MANAGEMENT TABLE(S), UNLESS INDICATED OTHERWISE IN THE CONTRACT PLANS OR PROPOSAL DOCUMENTS.

NEW YORK STATE OF OPPORTUNITY. Thruway Authority

U.S. CUSTOMARY STANDARD SHEET

LANE CLOSURE CHARTS
NEW YORK DIVISION
(SHEET 14 OF 26)

APPROVED MAY 1, 2019

/S/ PATRICK THOMPSON, P.E.
DIRECTOR DESIGN SUPPORT SERVICES BUREAU

ISSUED UNDER DB 19-001

TA 619-30

I-87: INT. 17 - INT. 18 (MP 60.1– MP 76) **SPRING SEASON March 1 through May 10**														
LANES REQUIRED TO BE MAINTAINED FOR TRAFFIC MANAGEMENT BY DAY OF WEEK & TIME OF DAY														
Time of Day	Mon		Tue		Wed		Thur		Fri		Sat		Sun	
	N	S	N	S	N	S	N	S	N	S	N	S	N	S
12am-1am	1	1	1	1	1	1	1	1	1	1	1	1	1	1
1am-2am	1	1	1	1	1	1	1	1	1	1	1	1	1	1
2am-3am	1	1	1	1	1	1	1	1	1	1	1	1	1	1
3am-4am	1	1	1	1	1	1	1	1	1	1	1	1	1	1
4am-5am	1	1	1	1	1	1	1	1	1	1	1	1	1	1
5am-6am	1	1	1	1	1	1	1	1	1	1	1	1	1	1
6am-7am	1	1	1	1	1	1	1	1	1	1	1	1	1	1
7am-8am	1	1	1	1	1	1	1	1	1	1	1	1	1	1
8am-9am	1	1	1	1	1	1	1	1	1	1	2	1	1	1
9am-10am	1	1	1	1	1	1	1	1	1	1	2	1	1	1
10am-11am	1	1	1	1	1	1	1	1	2	1	2	2	2	2
11am-12pm	1	1	1	1	1	1	2	1	2	2	2	2	2	2
12pm-1pm	1	1	1	1	1	1	2	1	2	2	2	2	2	2
1pm-2pm	1	1	1	1	1	1	2	1	2	2	2	2	2	2
2pm-3pm	1	1	1	1	2	1	2	2	2	2	2	2	2	2
3pm-4pm	2	1	2	1	2	1	2	2	2	2	2	2	2	2
4pm-5pm	2	1	2	1	2	1	2	2	2	2	2	2	2	2
5pm-6pm	2	1	2	1	2	1	2	2	2	2	2	2	2	2
6pm-7pm	1	1	1	1	1	1	1	1	2	2	1	1	2	2
7pm-8pm	1	1	1	1	1	1	1	1	2	1	1	1	2	2
8pm-9pm	1	1	1	1	1	1	1	1	2	1	1	1	1	2
9pm-10pm	1	1	1	1	1	1	1	1	2	1	1	1	1	1
10pm-11pm	1	1	1	1	1	1	1	1	1	1	1	1	1	1
11pm-12am	1	1	1	1	1	1	1	1	1	1	1	1	1	1

Chart.8A – 1/21/11

I-87: INT. 17 - INT. 18 (MP 60.1– MP 76) **SUMMER SEASON May 11 through Sept. 15**														
LANES REQUIRED TO BE MAINTAINED FOR TRAFFIC MANAGEMENT BY DAY OF WEEK & TIME OF DAY														
Time of Day	Mon		Tue		Wed		Thur		Fri		Sat		Sun	
	N	S	N	S	N	S	N	S	N	S	N	S	N	S
12am-1am	1	1	1	1	1	1	1	1	1	1	1	1	1	1
1am-2am	1	1	1	1	1	1	1	1	1	1	1	1	1	1
2am-3am	1	1	1	1	1	1	1	1	1	1	1	1	1	1
3am-4am	1	1	1	1	1	1	1	1	1	1	1	1	1	1
4am-5am	1	1	1	1	1	1	1	1	1	1	1	1	1	1
5am-6am	1	1	1	1	1	1	1	1	1	1	1	1	1	1
6am-7am	1	1	1	1	1	1	1	1	1	1	1	1	1	1
7am-8am	1	2	1	1	1	1	1	1	1	1	2	1	1	1
8am-9am	1	2	1	1	1	1	2	1	2	1	2	1	1	1
9am-10am	1	2	1	1	2	1	2	1	2	2	2	2	2	2
10am-11am	2	2	2	2	2	2	2	2	2	2	2	2	2	2
11am-12pm	2	2	2	2	2	2	2	2	2	2	2	2	2	2
12pm-1pm	2	2	2	2	2	2	2	2	2	2	2	2	2	2
1pm-2pm	2	2	2	2	2	2	2	2	2	2	2	2	2	2
2pm-3pm	2	2	2	2	2	2	2	2	2	2	2	2	2	2
3pm-4pm	2	2	2	2	2	2	2	2	2	2	2	2	2	2
4pm-5pm	2	2	2	2	2	2	2	2	2	2	2	2	2	2
5pm-6pm	2	2	2	2	2	2	2	2	2	2	2	2	2	2
6pm-7pm	1	2	1	1	1	2	2	2	2	2	2	2	2	2
7pm-8pm	1	2	1	1	1	1	2	1	2	2	1	2	2	2
8pm-9pm	1	1	1	1	1	1	1	1	2	1	1	2	1	2
9pm-10pm	1	1	1	1	1	1	1	1	2	1	1	1	1	2
10pm-11pm	1	1	1	1	1	1	1	1	2	1	1	1	1	2
11pm-12am	1	1	1	1	1	1	1	1	1	1	1	1	1	1

Chart.8A – 1/21/11

NOTES:

1) THE NEW YORK STATE THRUWAY IS A LIMITED ACCESS, HIGH-SPEED, HIGH-VOLUME HIGHWAY. TRAFFIC SHALL BE MAINTAINED IN ACCORDANCE WITH THE *MANUAL ON UNIFORM TRAFFIC CONTROL DEVICES (MUTCD)*, THE *WORK ZONE TRAFFIC CONTROL PLANS*, AND THE *STANDARD SPECIFICATIONS* SECTION 619 AS AMENDED BY THE AUTHORITY.

2) LANE CLOSURES ON THE THRUWAY SHALL ONLY BE ALLOWED IN ACCORDANCE WITH THESE TRAFFIC MANAGEMENT TABLE(S), UNLESS INDICATED OTHERWISE IN THE CONTRACT PLANS OR PROPOSAL DOCUMENTS.

NEW YORK STATE OF OPPORTUNITY. Thruway Authority

U.S. CUSTOMARY STANDARD SHEET

LANE CLOSURE CHARTS
NEW YORK DIVISION
(SHEET 15 OF 26)

APPROVED MAY 1, 2019

/S/ PATRICK THOMPSON, P.E.
DIRECTOR DESIGN SUPPORT
SERVICES BUREAU

ISSUED UNDER DB 19-001

TA 619-30

I-87: INT. 17 - INT. 18 (MP 60.1– MP 76) **FALL SEASON Sept. 16 through Nov. 30**														
LANES REQUIRED TO BE MAINTAINED FOR TRAFFIC MANAGEMENT BY DAY OF WEEK & TIME OF DAY														
Time of Day	Mon		Tue		Wed		Thur		Fri		Sat		Sun	
	N	S	N	S	N	S	N	S	N	S	N	S	N	S
12am-1am	1	1	1	1	1	1	1	1	1	1	1	1	1	1
1am-2am	1	1	1	1	1	1	1	1	1	1	1	1	1	1
2am-3am	1	1	1	1	1	1	1	1	1	1	1	1	1	1
3am-4am	1	1	1	1	1	1	1	1	1	1	1	1	1	1
4am-5am	1	1	1	1	1	1	1	1	1	1	1	1	1	1
5am-6am	1	1	1	1	1	1	1	1	1	1	1	1	1	1
6am-7am	1	1	1	1	1	1	1	1	1	1	1	1	1	1
7am-8am	1	1	1	1	1	1	1	1	1	1	1	1	1	1
8am-9am	1	1	1	1	1	1	1	1	1	1	2	1	1	1
9am-10am	1	1	1	1	1	1	1	1	2	1	2	2	1	2
10am-11am	1	2	1	1	1	1	1	1	2	1	2	2	2	2
11am-12pm	1	2	1	1	1	1	2	1	2	2	2	2	2	2
12pm-1pm	1	2	1	1	1	1	2	1	2	2	2	2	2	2
1pm-2pm	1	2	1	1	2	1	2	1	2	2	2	2	2	2
2pm-3pm	2	2	2	2	2	2	2	2	2	2	2	2	2	2
3pm-4pm	2	2	2	2	2	2	2	2	2	2	2	2	2	2
4pm-5pm	2	2	2	2	2	2	2	2	2	2	2	2	2	2
5pm-6pm	2	2	2	2	2	2	2	2	2	2	2	2	2	2
6pm-7pm	1	1	1	1	1	1	1	1	2	2	2	2	2	2
7pm-8pm	1	1	1	1	1	1	1	1	2	1	1	1	2	2
8pm-9pm	1	1	1	1	1	1	1	1	2	1	1	1	1	2
9pm-10pm	1	1	1	1	1	1	1	1	2	1	1	1	1	2
10pm-11pm	1	1	1	1	1	1	1	1	1	1	1	1	1	1
11pm-12am	1	1	1	1	1	1	1	1	1	1	1	1	1	1

Chart.8A – 1/21/11

I-87: INT. 17 - INT. 18 (MP 60.1– MP 76) **WINTER SEASON Dec. 1 through Feb. 28**														
LANES REQUIRED TO BE MAINTAINED FOR TRAFFIC MANAGEMENT BY DAY OF WEEK & TIME OF DAY														
Time of Day	Mon		Tue		Wed		Thur		Fri		Sat		Sun	
	N	S	N	S	N	S	N	S	N	S	N	S	N	S
12am-1am	1	1	1	1	1	1	1	1	1	1	1	1	1	1
1am-2am	1	1	1	1	1	1	1	1	1	1	1	1	1	1
2am-3am	1	1	1	1	1	1	1	1	1	1	1	1	1	1
3am-4am	1	1	1	1	1	1	1	1	1	1	1	1	1	1
4am-5am	1	1	1	1	1	1	1	1	1	1	1	1	1	1
5am-6am	1	1	1	1	1	1	1	1	1	1	1	1	1	1
6am-7am	1	1	1	1	1	1	1	1	1	1	1	1	1	1
7am-8am	1	1	1	1	1	1	1	1	1	1	1	1	1	1
8am-9am	1	1	1	1	1	1	1	1	1	1	2	1	1	1
9am-10am	1	1	1	1	1	1	1	1	1	1	2	1	1	1
10am-11am	1	1	1	1	1	1	1	1	2	1	2	2	1	1
11am-12pm	1	1	1	1	1	1	1	1	2	1	2	2	2	2
12pm-1pm	1	1	1	1	1	1	1	1	2	2	2	2	2	2
1pm-2pm	1	1	1	1	1	1	1	1	2	2	2	2	2	2
2pm-3pm	1	1	1	1	2	1	1	1	2	2	2	2	2	2
3pm-4pm	2	1	2	1	2	1	2	2	2	2	2	2	2	2
4pm-5pm	2	1	2	1	2	1	2	2	2	2	2	2	2	2
5pm-6pm	2	1	2	1	2	1	2	2	2	2	1	2	2	2
6pm-7pm	1	1	1	1	1	1	1	1	2	2	1	1	1	2
7pm-8pm	1	1	1	1	1	1	1	1	2	1	1	1	1	2
8pm-9pm	1	1	1	1	1	1	1	1	2	1	1	1	1	2
9pm-10pm	1	1	1	1	1	1	1	1	2	1	1	1	1	1
10pm-11pm	1	1	1	1	1	1	1	1	1	1	1	1	1	1
11pm-12am	1	1	1	1	1	1	1	1	1	1	1	1	1	1

Chart.8A – 1/21/11

NOTES:

1) THE NEW YORK STATE THRUWAY IS A LIMITED ACCESS, HIGH-SPEED, HIGH-VOLUME HIGHWAY. TRAFFIC SHALL BE MAINTAINED IN ACCORDANCE WITH THE *MANUAL ON UNIFORM TRAFFIC CONTROL DEVICES (MUTCD)*, THE *WORK ZONE TRAFFIC CONTROL PLANS*, AND THE *STANDARD SPECIFICATIONS* SECTION 619 AS AMENDED BY THE AUTHORITY.

2) LANE CLOSURES ON THE THRUWAY SHALL ONLY BE ALLOWED IN ACCORDANCE WITH THESE TRAFFIC MANAGEMENT TABLE(S), UNLESS INDICATED OTHERWISE IN THE CONTRACT PLANS OR PROPOSAL DOCUMENTS.

NEW YORK STATE OF OPPORTUNITY. Thruway Authority

U.S. CUSTOMARY STANDARD SHEET

LANE CLOSURE CHARTS
NEW YORK DIVISION
(SHEET 16 OF 26)

APPROVED MAY 1, 2019

/S/ PATRICK THOMPSON, P.E.
DIRECTOR DESIGN SUPPORT
SERVICES BUREAU

ISSUED UNDER DB 19-001

TA 619-30

2003: CROSS WESTCHESTER EXPRESSWAY; I-87 TO INT. 9/HUTCH (MP0.0 - MP7.5)														
LANES REQUIRED TO BE MAINTAINED FOR TRAFFIC MANAGEMENT BY DAY OF WEEK & TIME OF DAY – 2003														
Time of Day	Mon		Tue		Wed		Thur		Fri		Sat		Sun	
	E	W	E	W	E	W	E	W	E	W	E	W	E	W
12am-1am	1	1	1	1	1	1	1	1	1	1	1	1	1	1
1am-2am	1	1	1	1	1	1	1	1	1	1	1	1	1	1
2am-3am	1	1	1	1	1	1	1	1	1	1	1	1	1	1
3am-4am	1	1	1	1	1	1	1	1	1	1	1	1	1	1
4am-5am	1	1	1	1	1	1	1	1	1	1	1	1	1	1
5am-6am	1	1	1	1	1	1	1	1	1	1	1	1	1	1
6am-7am	3	3	3	3	3	3	3	3	3	3	2	1	1	1
7am-8am	3	3	3	3	3	3	3	3	3	3	2	2	1	1
8am-9am	3	3	3	3	3	3	3	3	3	3	3	2	2	1
9am-10am	3	3	3	3	3	3	3	3	3	3	3	3	2	2
10am-11am	3	3	3	3	3	3	3	3	3	3	3	3	3	3
11am-12pm	3	3	3	3	3	3	3	3	3	3	3	3	3	3
12pm-1pm	3	3	3	3	3	3	3	3	3	3	3	3	3	3
1pm-2pm	3	3	3	3	3	3	3	3	3	3	3	3	3	3
2pm-3pm	3	3	3	3	3	3	3	3	3	3	3	3	3	3
3pm-4pm	3	3	3	3	3	3	3	3	3	3	3	3	3	3
4pm-5pm	3	3	3	3	3	3	3	3	3	3	3	3	3	3
5pm-6pm	3	3	3	3	3	3	3	3	3	3	3	3	3	3
6pm-7pm	3	3	3	3	3	3	3	3	3	3	3	3	3	3
7pm-8pm	3	3	3	3	3	3	3	3	3	3	3	3	3	3
8pm-9pm	2	3	2	3	2	3	2	3	3	3	3	3	3	3
9pm-10pm	2	2	2	2	2	2	2	2	2	3	2	2	3	2
10pm-11pm	2	2	2	2	2	2	2	2	2	2	2	2	2	2
11pm-12am	1	1	1	1	1	1	1	1	2	2	1	2	1	1

Chart 9 – 2003– 9/15/00

NOTES:

1) THE NEW YORK STATE THRUWAY SYSTEM IS A LIMITED ACCESS, HIGH-SPEED, HIGH-VOLUME HIGHWAY. TRAFFIC SHALL BE MAINTAINED IN ACCORDANCE WITH THE *MANUAL ON UNIFORM TRAFFIC CONTROL DEVICES (MUTCD)*, THE *WORK ZONE TRAFFIC CONTROL PLANS*, AND THE *STANDARD SPECIFICATIONS* SECTION 619 AS AMENDED BY THE AUTHORITY.

2) LANE CLOSURES ON THE THRUWAY MAINLINE SYSTEM SHALL ONLY BE ALLOWED IN ACCORDANCE WITH THESE TRAFFIC MANAGEMENT TABLE(S), UNLESS INDICATED OTHERWISE IN THE CONTRACT PLANS OR PROPOSAL DOCUMENTS.

3) IF THE TRAFFIC MANAGEMENT TABLE(S) INDICATE THERE ARE NO LANES AVAILABLE FOR CLOSURE WITHIN A CERTAIN TIME PERIOD, WORK IN SHOULDER CLOSURES (SHORT-DURATION, MOBILE AND SHORT- OR INTERMEDIATE-TERM) WILL ALSO BE PROHIBITED DURING THIS TIME. IF MORE THAN ONE TABLE IS APPLICABLE TO A WORK ZONE LOCATION, THE MOST RESTRICTIVE REQUIREMENTS SHALL BE USED. TRAFFIC MANAGEMENT TABLES DO NOT GUARANTEE LANE CLOSURE AVAILABILITY; THE REQUIREMENTS OF SECTION B. *WORK RESTRICTIONS* SHALL SUPERSEDE THESE TABLES, WHEN APPLICABLE.

NEW YORK STATE OF OPPORTUNITY. Thruway Authority

U.S. CUSTOMARY STANDARD SHEET

LANE CLOSURE CHARTS
NEW YORK DIVISION
(SHEET 17 OF 26)

APPROVED MAY 1, 2019

/S/ PATRICK THOMPSON, P.E.
DIRECTOR DESIGN SUPPORT SERVICES BUREAU

ISSUED UNDER DB 19-001

TA 619-30

CROSS WESTCHESTER EXPRESSWAY; INT. 9/HUTCH TO INT. 12/I-95 (MP7.5 - MP 10.8)														
LANES REQUIRED TO BE MAINTAINED FOR TRAFFIC MANAGEMENT BY DAY OF WEEK & TIME OF DAY														
Time of Day	Mon		Tue		Wed		Thur		Fri		Sat		Sun	
	E	W	E	W	E	W	E	W	E	W	E	W	E	W
12am-1am	1	1	1	1	1	1	1	1	1	1	1	1	1	1
1am-2am	1	1	1	1	1	1	1	1	1	1	1	1	1	1
2am-3am	1	1	1	1	1	1	1	1	1	1	1	1	1	1
3am-4am	1	1	1	1	1	1	1	1	1	1	1	1	1	1
4am-5am	1	1	1	1	1	1	1	1	1	1	1	1	1	1
5am-6am	1	1	1	1	1	1	1	1	1	1	1	1	1	1
6am-7am	3	2	3	2	3	2	3	2	3	2	1	1	1	1
7am-8am	3	3	3	3	3	3	3	3	3	3	2	2	1	1
8am-9am	3	3	3	3	3	3	3	3	3	3	2	2	1	1
9am-10am	3	3	3	3	3	3	3	3	3	3	2	3	2	2
10am-11am	3	2	3	2	3	2	3	2	3	2	3	3	2	2
11am-12pm	3	2	3	2	3	2	3	2	3	2	3	3	3	3
12pm-1pm	3	2	3	2	3	2	3	2	3	3	3	3	3	3
1pm-2pm	3	3	3	3	3	3	3	3	3	3	3	3	3	3
2pm-3pm	3	3	3	3	3	3	3	3	3	3	3	3	3	3
3pm-4pm	3	3	3	3	3	3	3	3	3	3	3	3	3	3
4pm-5pm	3	3	3	3	3	3	3	3	3	3	3	3	3	3
5pm-6pm	3	3	3	3	3	3	3	3	3	3	3	3	3	3
6pm-7pm	3	3	3	3	3	3	3	3	3	3	3	3	3	3
7pm-8pm	2	2	2	2	2	2	2	2	3	3	2	3	3	3
8pm-9pm	2	2	2	2	2	2	2	2	2	3	2	2	2	3
9pm-10pm	2	2	2	2	2	2	2	2	2	2	2	2	2	2
10pm-11pm	1	1	1	1	1	1	1	1	2	2	2	2	2	2
11pm-12am	1	1	1	1	1	1	1	1	1	1	1	2	2	1

Chart 10 - 3/01/2007

NOTES:

1) THE NEW YORK STATE THRUWAY SYSTEM IS A LIMITED ACCESS, HIGH-SPEED, HIGH-VOLUME HIGHWAY. TRAFFIC SHALL BE MAINTAINED IN ACCORDANCE WITH THE *MANUAL ON UNIFORM TRAFFIC CONTROL DEVICES (MUTCD)*, THE *WORK ZONE TRAFFIC CONTROL PLANS*, AND THE *STANDARD SPECIFICATIONS* SECTION 619 AS AMENDED BY THE AUTHORITY.

2) LANE CLOSURES ON THE THRUWAY MAINLINE SYSTEM SHALL ONLY BE ALLOWED IN ACCORDANCE WITH THESE TRAFFIC MANAGEMENT TABLE(S), UNLESS INDICATED OTHERWISE IN THE CONTRACT PLANS OR PROPOSAL DOCUMENTS.

3) IF THE TRAFFIC MANAGEMENT TABLE(S) INDICATE THERE ARE NO LANES AVAILABLE FOR CLOSURE WITHIN A CERTAIN TIME PERIOD, WORK IN SHOULDER CLOSURES (SHORT-DURATION, MOBILE AND SHORT- OR INTERMEDIATE-TERM) WILL ALSO BE PROHIBITED DURING THIS TIME. IF MORE THAN ONE TABLE IS APPLICABLE TO A WORK ZONE LOCATION, THE MOST RESTRICTIVE REQUIREMENTS SHALL BE USED. TRAFFIC MANAGEMENT TABLES DO NOT GUARANTEE LANE CLOSURE AVAILABILITY; THE REQUIREMENTS OF SECTION B. *WORK RESTRICTIONS* SHALL SUPERSEDE THESE TABLES, WHEN APPLICABLE.

NEW YORK STATE OF OPPORTUNITY. Thruway Authority

U.S. CUSTOMARY STANDARD SHEET

LANE CLOSURE CHARTS
NEW YORK DIVISION
(SHEET 18 OF 26)

APPROVED MAY 1, 2019

/S/ PATRICK THOMPSON, P.E.
DIRECTOR DESIGN SUPPORT SERVICES BUREAU

ISSUED UNDER DB 19-001

TA 619-30

GARDEN STATE PARKWAY EXTENSION (MP 0.0 – MP 2.40)														
LANES REQUIRED TO BE MAINTAINED FOR TRAFFIC MANAGEMENT BY DAY OF WEEK & TIME OF DAY														
Time of Day	Mon		Tue		Wed		Thur		Fri		Sat		Sun	
	N	S	N	S	N	S	N	S	N	S	N	S	N	S
12am-1am	1	1	1	1	1	1	1	1	1	1	1	1	1	1
1am-2am	1	1	1	1	1	1	1	1	1	1	1	1	1	1
2am-3am	1	1	1	1	1	1	1	1	1	1	1	1	1	1
3am-4am	1	1	1	1	1	1	1	1	1	1	1	1	1	1
4am-5am	1	1	1	1	1	1	1	1	1	1	1	1	1	1
5am-6am	1	1	1	1	1	1	1	1	1	1	1	1	1	1
6am-7am	1	1	1	1	1	1	1	1	1	1	1	1	1	1
7am-8am	2	2	2	2	2	2	2	2	2	2	1	1	1	1
8am-9am	2	2	2	2	2	2	2	2	2	2	1	1	1	1
9am-10am	2	2	2	2	2	2	2	2	2	2	2	1	1	1
10am-11am	1	1	1	1	1	1	1	1	1	1	2	2	2	2
11am-12pm	1	1	1	1	1	1	1	1	2	1	2	2	2	2
12pm-1pm	1	1	1	1	1	1	1	1	2	2	2	2	2	2
1pm-2pm	1	1	1	1	1	1	1	1	2	2	2	2	2	2
2pm-3pm	1	1	1	1	1	1	1	2	2	2	2	2	2	2
3pm-4pm	2	2	2	2	2	2	2	2	2	2	2	2	2	2
4pm-5pm	2	2	2	2	2	2	2	2	2	2	2	2	2	2
5pm-6pm	2	2	2	2	2	2	2	2	2	2	2	2	2	2
6pm-7pm	2	2	2	2	2	2	2	2	2	2	2	2	2	2
7pm-8pm	2	1	2	1	2	1	2	1	2	2	2	1	2	2
8pm-9pm	1	1	1	1	1	1	1	1	2	1	1	1	2	2
9pm-10pm	1	1	1	1	1	1	1	1	1	1	1	1	1	1
10pm-11pm	1	1	1	1	1	1	1	1	1	1	1	1	1	1
11pm-12am	1	1	1	1	1	1	1	1	1	1	1	1	1	1

Chart.16 – 05/09/07

NOTES:

1) THE NEW YORK STATE THRUWAY SYSTEM IS A LIMITED ACCESS, HIGH-SPEED, HIGH-VOLUME HIGHWAY. TRAFFIC SHALL BE MAINTAINED IN ACCORDANCE WITH THE *MANUAL ON UNIFORM TRAFFIC CONTROL DEVICES (MUTCD),* THE *WORK ZONE TRAFFIC CONTROL PLANS*, AND THE *STANDARD SPECIFICATIONS* SECTION 619 AS AMENDED BY THE AUTHORITY.

2) LANE CLOSURES ON THE THRUWAY MAINLINE SYSTEM SHALL ONLY BE ALLOWED IN ACCORDANCE WITH THESE TRAFFIC MANAGEMENT TABLE(S), UNLESS INDICATED OTHERWISE IN THE CONTRACT PLANS OR PROPOSAL DOCUMENTS.

3) IF THE TRAFFIC MANAGEMENT TABLE(S) INDICATE THERE ARE NO LANES AVAILABLE FOR CLOSURE WITHIN A CERTAIN TIME PERIOD, WORK IN SHOULDER CLOSURES (SHORT-DURATION, MOBILE AND SHORT- OR INTERMEDIATE-TERM) WILL ALSO BE PROHIBITED DURING THIS TIME. IF MORE THAN ONE TABLE IS APPLICABLE TO A WORK ZONE LOCATION, THE MOST RESTRICTIVE REQUIREMENTS SHALL BE USED. TRAFFIC MANAGEMENT TABLES DO NOT GUARANTEE LANE CLOSURE AVAILABILITY; THE REQUIREMENTS OF SECTION B. *WORK RESTRICTIONS* SHALL SUPERSEDE THESE TABLES, WHEN APPLICABLE.

NEW YORK STATE OF OPPORTUNITY. | Thruway Authority

U.S. CUSTOMARY STANDARD SHEET

LANE CLOSURE CHARTS
NEW YORK DIVISION
(SHEET 19 OF 26)

APPROVED MAY 1, 2019

/S/ PATRICK THOMPSON, P.E.
DIRECTOR DESIGN SUPPORT
SERVICES BUREAU

ISSUED UNDER DB 19-001

TA 619-30

I-95: INT. 8B - INT. 14 (MP 0.0 - MP 3.0)														
LANES REQUIRED TO BE MAINTAINED FOR TRAFFIC MANAGEMENT BY DAY OF WEEK & TIME OF DAY														
Time of Day	Mon		Tue		Wed		Thur		Fri		Sat		Sun	
	N	S	N	S	N	S	N	S	N	S	N	S	N	S
12am-1am	2**	1	2**	1	2**	1	2**	1	2	2	2	2	2	2
1am-2am	1	1	1	1	1	1	1	1	1	1	1	1	2	2
2am-3am	1	1	1	1	1	1	1	1	1	1	1	1	1	1
3am-4am	1	1	1	1	1	1	1	1	1	1	1	1	1	1
4am-5am	1	1	1	1	1	1	1	1	1	1	1	1	1	1
5am-6am	2*	2*	2*	2*	2*	2*	2*	2*	2	2	1	1	1	1
6am-7am	3	3	3	3	3	3	3	3	3	3	2	2	1	1
7am-8am	3	3	3	3	3	3	3	3	3	3	3	3	1	1
8am-9am	3	3	3	3	3	3	3	3	3	3	3	3	2	2
9am-10am	3	3	3	3	3	3	3	3	3	3	3	3	2	2
10am-11am	3	3	3	3	3	3	3	3	3	3	3	3	3	3
11am-12pm	3	3	3	3	3	3	3	3	3	3	3	3	3	3
12pm-1pm	3	3	3	3	3	3	3	3	3	3	3	3	3	3
1pm-2pm	3	3	3	3	3	3	3	3	3	3	3	3	3	3
2pm-3pm	3	3	3	3	3	3	3	3	3	3	3	3	3	3
3pm-4pm	3	3	3	3	3	3	3	3	3	3	3	3	3	3
4pm-5pm	3	3	3	3	3	3	3	3	3	3	3	3	3	3
5pm-6pm	3	3	3	3	3	3	3	3	3	3	3	3	3	3
6pm-7pm	3	3	3	3	3	3	3	3	3	3	3	3	3	3
7pm-8pm	3	3	3	3	3	3	3	3	3	3	3	3	3	3
8pm-9pm	3	3	3	3	3	3	3	3	3	3	3	3	3	3
9pm-10pm	3	3	3	3	3	3	3	3	3	3	3	3	3	3
10pm-11pm	2	2	2	2	2	2	2	2	3	3	3	3	3	3
11pm-12am	2	2	2	2	2	2	2	2	2	2	2	2	2	2

Chart 17 – 2006 To 2008 Revised 2/27/06

** 2 Lanes Required from 12:00AM to 12:30AM and 1 Lane Required from 12:30AM to 1:00AM
* 1 Lane Required from 5:00AM to 5:30AM and 2 Lanes Required from 5:30AM to 6:00AM

NOTES:

1) THE NEW YORK STATE THRUWAY SYSTEM IS A LIMITED ACCESS, HIGH-SPEED, HIGH-VOLUME HIGHWAY. TRAFFIC SHALL BE MAINTAINED IN ACCORDANCE WITH THE *MANUAL ON UNIFORM TRAFFIC CONTROL DEVICES (MUTCD),* THE *WORK ZONE TRAFFIC CONTROL PLANS*, AND THE *STANDARD SPECIFICATIONS* SECTION 619 AS AMENDED BY THE AUTHORITY.

2) LANE CLOSURES ON THE THRUWAY MAINLINE SYSTEM SHALL ONLY BE ALLOWED IN ACCORDANCE WITH THESE TRAFFIC MANAGEMENT TABLE(S), UNLESS INDICATED OTHERWISE IN THE CONTRACT PLANS OR PROPOSAL DOCUMENTS.

3) IF THE TRAFFIC MANAGEMENT TABLE(S) INDICATE THERE ARE NO LANES AVAILABLE FOR CLOSURE WITHIN A CERTAIN TIME PERIOD, WORK IN SHOULDER CLOSURES (SHORT-DURATION, MOBILE AND SHORT- OR INTERMEDIATE-TERM) WILL ALSO BE PROHIBITED DURING THIS TIME. IF MORE THAN ONE TABLE IS APPLICABLE TO A WORK ZONE LOCATION, THE MOST RESTRICTIVE REQUIREMENTS SHALL BE USED. TRAFFIC MANAGEMENT TABLES DO NOT GUARANTEE LANE CLOSURE AVAILABILITY; THE REQUIREMENTS OF SECTION B. *WORK RESTRICTIONS* SHALL SUPERSEDE THESE TABLES, WHEN APPLICABLE.

NEW YORK STATE OF OPPORTUNITY. Thruway Authority

U.S. CUSTOMARY STANDARD SHEET

LANE CLOSURE CHARTS
NEW YORK DIVISION
(SHEET 20 OF 26)

APPROVED MAY 1, 2019

/S/ PATRICK THOMPSON, P.E.
DIRECTOR DESIGN SUPPORT
SERVICES BUREAU

ISSUED UNDER DB 19-001

TA 619-30

I-95: INT. 14 - INT. 21 (MP 3.0 - MP 13.8)														
LANES REQUIRED TO BE MAINTAINED FOR TRAFFIC MANAGEMENT BY DAY OF WEEK & TIME OF DAY														
Time of Day	Mon		Tue		Wed		Thur		Fri		Sat		Sun	
	N	S	N	S	N	S	N	S	N	S	N	S	N	S
12am-1am	1	1	1	1	1	1	1	1	1	1	1	1	2	2
1am-2am	1	1	1	1	1	1	1	1	1	1	1	1	1	1
2am-3am	1	1	1	1	1	1	1	1	1	1	1	1	1	1
3am-4am	1	1	1	1	1	1	1	1	1	1	1	1	1	1
4am-5am	1	1	1	1	1	1	1	1	1	1	1	1	1	1
5am-6am	2*	2*	2*	2*	2*	2*	2*	2*	2	2	1	1	1	1
6am-7am	2	2	2	2	2	2	2	2	2	2	2	2	1	1
7am-8am	3	3	3	3	3	3	3	3	3	3	2	2	1	1
8am-9am	3	3	3	3	3	3	3	3	3	3	3	2	2	2
9am-10am	3	3	3	3	3	3	3	3	3	3	3	3	2	2
10am-11am	3	3	3	3	3	3	3	3	3	3	3	3	3	3
11am-12pm	3	3	3	3	3	3	3	3	3	3	3	3	3	3
12pm-1pm	3	3	3	3	3	3	3	3	3	3	3	3	3	3
1pm-2pm	3	3	3	3	3	3	3	3	3	3	3	3	3	3
2pm-3pm	3	3	3	3	3	3	3	3	3	3	3	3	3	3
3pm-4pm	3	3	3	3	3	3	3	3	3	3	3	3	3	3
4pm-5pm	3	3	3	3	3	3	3	3	3	3	3	3	3	3
5pm-6pm	3	3	3	3	3	3	3	3	3	3	3	3	3	3
6pm-7pm	3	3	3	3	3	3	3	3	3	3	3	3	3	3
7pm-8pm	2	3	2	3	2	3	2	3	3	3	3	3	3	3
8pm-9pm	2	2	2	2	2	2	2	2	3	3	2	3	3	3
9pm-10pm	2	2	2	2	2	2	2	2	2	2	2	3	3	3
10pm-11pm	2	2	2	2	2	2	2	2	2	2	2	2	2	2
11pm-12am	1	1	1	1	1	1	1	1	2	2	2	2	2	2

Chart 18 – 2006 To 2008 Revised 2/27/06

(Revised to MP 3.0 – MP13.8 on 4/1/2019)

* 1 Lane Required from 5:00AM to 5:30AM and 2 Lanes Required from 5:30Am to 6:00AM

NOTES:

1) THE NEW YORK STATE THRUWAY SYSTEM IS A LIMITED ACCESS, HIGH-SPEED, HIGH-VOLUME HIGHWAY. TRAFFIC SHALL BE MAINTAINED IN ACCORDANCE WITH THE *MANUAL ON UNIFORM TRAFFIC CONTROL DEVICES (MUTCD),* THE *WORK ZONE TRAFFIC CONTROL PLANS*, AND THE *STANDARD SPECIFICATIONS* SECTION 619 AS AMENDED BY THE AUTHORITY.

2) LANE CLOSURES ON THE THRUWAY MAINLINE SYSTEM SHALL ONLY BE ALLOWED IN ACCORDANCE WITH THESE TRAFFIC MANAGEMENT TABLE(S), UNLESS INDICATED OTHERWISE IN THE CONTRACT PLANS OR PROPOSAL DOCUMENTS.

3) IF THE TRAFFIC MANAGEMENT TABLE(S) INDICATE THERE ARE NO LANES AVAILABLE FOR CLOSURE WITHIN A CERTAIN TIME PERIOD, WORK IN SHOULDER CLOSURES (SHORT-DURATION, MOBILE AND SHORT- OR INTERMEDIATE-TERM) WILL ALSO BE PROHIBITED DURING THIS TIME. IF MORE THAN ONE TABLE IS APPLICABLE TO A WORK ZONE LOCATION, THE MOST RESTRICTIVE REQUIREMENTS SHALL BE USED. TRAFFIC MANAGEMENT TABLES DO NOT GUARANTEE LANE CLOSURE AVAILABILITY; THE REQUIREMENTS OF SECTION B. *WORK RESTRICTIONS* SHALL SUPERSEDE THESE TABLES, WHEN APPLICABLE.

NEW YORK STATE OF OPPORTUNITY. Thruway Authority

U.S. CUSTOMARY STANDARD SHEET

LANE CLOSURE CHARTS
NEW YORK DIVISION
(SHEET 21 OF 26)

APPROVED MAY 1, 2019

/S/ PATRICK THOMPSON, P.E.
DIRECTOR DESIGN SUPPORT SERVICES BUREAU

ISSUED UNDER DB 19-001

TA 619-30

I-95: INT 21/22 (MP 13.8 – MP 14.4) **SPRING SEASON** MARCH 1 THRU MAY 10														
LANES REQUIRED TO BE MAINTAINED FOR TRAFFIC MANAGEMENT BY DAY OF WEEK & TIME OF DAY														
Time of Day	Mon		Tue		Wed		Thur		Fri		Sat		Sun	
	N	S	N	S	N	S	N	S	N	S	N	S	N	S
12am-1am	1	1	1	1	1	1	1	1	1	1	1	1	1	1
1am-2am	1	1	1	1	1	1	1	1	1	1	1	1	1	1
2am-3am	1	1	1	1	1	1	1	1	1	1	1	1	1	1
3am-4am	1	1	1	1	1	1	1	1	1	1	1	1	1	1
4am-5am	1	1	1	1	1	1	1	1	1	1	1	1	1	1
5am-6am	1	2	1	2	1	2	1	2	1	2	1	1	1	1
6am-7am	2	2	2	2	2	2	2	2	2	2	1	1	1	1
7am-8am	2	2	2	2	2	2	2	2	2	2	2	2	1	1
8am-9am	2	2	2	2	2	2	2	2	2	2	2	2	2	2
9am-10am	2	2	2	2	2	2	2	2	2	2	2	2	2	2
10am-11am	2	2	2	2	2	2	2	2	2	2	2	2	2	2
11am-12pm	2	2	2	2	2	2	2	2	2	2	2	2	2	2
12pm-1pm	2	2	2	2	2	2	2	2	2	2	2	2	2	2
1pm-2pm	2	2	2	2	2	2	2	2	2	2	2	2	2	2
2pm-3pm	2	2	2	2	2	2	2	2	2	2	2	2	2	2
3pm-4pm	2	2	2	2	2	2	2	2	2	2	2	2	2	2
4pm-5pm	2	2	2	2	2	2	2	2	2	2	2	2	2	2
5pm-6pm	2	2	2	2	2	2	2	2	2	2	2	2	2	2
6pm-7pm	2	2	2	2	2	2	2	2	2	2	2	2	2	2
7pm-8pm	2	2	2	2	2	2	2	2	2	2	2	2	2	2
8pm-9pm	2	2	2	2	2	2	2	2	2	2	2	2	2	2
9pm-10pm	2	2	2	2	2	2	2	2	2	2	2	2	2	2
10pm-11pm	1	1	1	1	2	1	2	2	2	2	2	2	2	2
11pm-12am	1	1	1	1	1	1	1	1	1	1	2	2	1	1

Chart 19 – 04/01/2019

I-95: INT 21/22 (MP 13.8 – MP 14.4) **SUMMER SEASON** MAY 11 THRU SEPT 15														
LANES REQUIRED TO BE MAINTAINED FOR TRAFFIC MANAGEMENT BY DAY OF WEEK & TIME OF DAY														
Time of Day	Mon		Tue		Wed		Thur		Fri		Sat		Sun	
	N	S	N	S	N	S	N	S	N	S	N	S	N	S
12am-1am	1	1	1	1	1	1	1	1	1	1	1	1	1	1
1am-2am	1	1	1	1	1	1	1	1	1	1	1	1	1	1
2am-3am	1	1	1	1	1	1	1	1	1	1	1	1	1	1
3am-4am	1	1	1	1	1	1	1	1	1	1	1	1	1	1
4am-5am	1	1	1	1	1	1	1	1	1	1	1	1	1	1
5am-6am	1	2	1	2	1	2	1	2	1	2	1	1	1	1
6am-7am	2	2	2	2	2	2	2	2	2	2	2	2	1	1
7am-8am	2	2	2	2	2	2	2	2	2	2	2	2	1	2
8am-9am	2	2	2	2	2	2	2	2	2	2	2	2	2	2
9am-10am	2	2	2	2	2	2	2	2	2	2	2	2	2	2
10am-11am	2	2	2	2	2	2	2	2	2	2	2	2	2	2
11am-12pm	2	2	2	2	2	2	2	2	2	2	2	2	2	3
12pm-1pm	2	2	2	2	2	2	2	2	2	2	2	2	2	3
1pm-2pm	2	2	2	2	2	2	2	2	2	2	2	2	2	3
2pm-3pm	2	2	2	2	2	2	2	2	2	2	2	2	2	3
3pm-4pm	2	2	2	2	2	2	2	2	2	2	2	2	2	3
4pm-5pm	2	2	2	2	2	2	2	2	2	2	2	2	2	3
5pm-6pm	2	2	2	2	2	2	2	2	2	2	2	2	2	3
6pm-7pm	2	2	2	2	2	2	2	2	2	2	2	2	2	3
7pm-8pm	2	2	2	2	2	2	2	2	2	2	2	2	2	3
8pm-9pm	2	2	2	2	2	2	2	2	2	2	2	2	2	3
9pm-10pm	2	2	2	2	2	2	2	2	2	2	2	2	2	2
10pm-11pm	1	1	1	1	2	1	2	2	2	2	2	2	2	2
11pm-12am	1	1	1	1	1	1	1	1	2	2	2	2	2	2

Chart 19 – 04/01/2019

NOTES:

1) THE NEW YORK STATE THRUWAY SYSTEM IS A LIMITED ACCESS, HIGH-SPEED, HIGH-VOLUME HIGHWAY. TRAFFIC SHALL BE MAINTAINED IN ACCORDANCE WITH THE *MANUAL ON UNIFORM TRAFFIC CONTROL DEVICES (MUTCD)*, THE *WORK ZONE TRAFFIC CONTROL PLANS*, AND THE *STANDARD SPECIFICATIONS* SECTION 619 AS AMENDED BY THE AUTHORITY.

2) LANE CLOSURES ON THE THRUWAY MAINLINE SYSTEM SHALL ONLY BE ALLOWED IN ACCORDANCE WITH THESE TRAFFIC MANAGEMENT TABLE(S), UNLESS INDICATED OTHERWISE IN THE CONTRACT PLANS OR PROPOSAL DOCUMENTS.

3) IF THE TRAFFIC MANAGEMENT TABLE(S) INDICATE THERE ARE NO LANES AVAILABLE FOR CLOSURE WITHIN A CERTAIN TIME PERIOD, WORK IN SHOULDER CLOSURES (SHORT-DURATION, MOBILE AND SHORT- OR INTERMEDIATE-TERM) WILL ALSO BE PROHIBITED DURING THIS TIME. IF MORE THAN ONE TABLE IS APPLICABLE TO A WORK ZONE LOCATION, THE MOST RESTRICTIVE REQUIREMENTS SHALL BE USED. TRAFFIC MANAGEMENT TABLES DO NOT GUARANTEE LANE CLOSURE AVAILABILITY; THE REQUIREMENTS OF SECTION B. *WORK RESTRICTIONS* SHALL SUPERSEDE THESE TABLES, WHEN APPLICABLE.

NEW YORK STATE OF OPPORTUNITY. Thruway Authority

U.S. CUSTOMARY STANDARD SHEET

LANE CLOSURE CHARTS
NEW YORK DIVISION
(SHEET 22 OF 26)

APPROVED MAY 1, 2019

/S/ PATRICK THOMPSON, P.E.
DIRECTOR DESIGN SUPPORT SERVICES BUREAU

ISSUED UNDER DB 19-001

TA 619-30

I-95: INT 21/22 (MP 13.8 – MP 14.4) **FALL SEASON** SEPT 16 THRU NOV 30														
LANES REQUIRED TO BE MAINTAINED FOR TRAFFIC MANAGEMENT BY DAY OF WEEK & TIME OF DAY														
Time of Day	Mon		Tue		Wed		Thur		Fri		Sat		Sun	
	N	S	N	S	N	S	N	S	N	S	N	S	N	S
12am-1am	1	1	1	1	1	1	1	1	1	1	1	1	1	1
1am-2am	1	1	1	1	1	1	1	1	1	1	1	1	1	1
2am-3am	1	1	1	1	1	1	1	1	1	1	1	1	1	1
3am-4am	1	1	1	1	1	1	1	1	1	1	1	1	1	1
4am-5am	1	1	1	1	1	1	1	1	1	1	1	1	1	1
5am-6am	1	2	1	2	1	2	1	2	1	2	1	1	1	1
6am-7am	2	2	2	2	2	2	2	2	2	2	1	1	1	1
7am-8am	2	2	2	2	2	2	2	2	2	2	2	2	1	1
8am-9am	2	2	2	2	2	2	2	2	2	2	2	2	2	2
9am-10am	2	2	2	2	2	2	2	2	2	2	2	2	2	2
10am-11am	2	2	2	2	2	2	2	2	2	2	2	2	2	2
11am-12pm	2	2	2	2	2	2	2	2	2	2	2	2	2	2
12pm-1pm	2	2	2	2	2	2	2	2	2	2	2	2	2	3
1pm-2pm	2	2	2	2	2	2	2	2	2	2	2	2	2	3
2pm-3pm	2	2	2	2	2	2	2	2	2	2	2	2	2	3
3pm-4pm	2	2	2	2	2	2	2	2	2	2	2	2	2	3
4pm-5pm	2	2	2	2	2	2	2	2	2	2	2	2	2	3
5pm-6pm	2	2	2	2	2	2	2	2	2	2	2	2	2	3
6pm-7pm	2	2	2	2	2	2	2	2	2	2	2	2	2	3
7pm-8pm	2	2	2	2	2	2	2	2	2	2	2	2	2	3
8pm-9pm	2	2	2	2	2	2	2	2	2	2	2	2	2	2
9pm-10pm	1	2	2	2	2	2	2	2	2	2	2	2	2	2
10pm-11pm	1	1	1	1	1	1	2	2	2	2	2	2	2	2
11pm-12am	1	1	1	1	1	1	1	1	2	1	2	2	1	1

Chart 19 – 04/01/2019

I-95: INT 21/22 (MP 13.8 – MP 14.4) **WINTER SEASON** DEC 1 THRU FEB 29														
LANES REQUIRED TO BE MAINTAINED FOR TRAFFIC MANAGEMENT BY DAY OF WEEK & TIME OF DAY														
Time of Day	Mon		Tue		Wed		Thur		Fri		Sat		Sun	
	N	S	N	S	N	S	N	S	N	S	N	S	N	S
12am-1am	1	1	1	1	1	1	1	1	1	1	1	1	1	1
1am-2am	1	1	1	1	1	1	1	1	1	1	1	1	1	1
2am-3am	1	1	1	1	1	1	1	1	1	1	1	1	1	1
3am-4am	1	1	1	1	1	1	1	1	1	1	1	1	1	1
4am-5am	1	1	1	1	1	1	1	1	1	1	1	1	1	1
5am-6am	1	2	1	2	1	2	1	2	1	2	1	1	1	1
6am-7am	2	2	2	2	2	2	2	2	2	2	2	1	1	1
7am-8am	2	2	2	2	2	2	2	2	2	2	2	2	1	1
8am-9am	2	2	2	2	2	2	2	2	2	2	2	2	1	2
9am-10am	2	2	2	2	2	2	2	2	2	2	2	2	2	2
10am-11am	2	2	2	2	2	2	2	2	2	2	2	2	2	2
11am-12pm	2	2	2	2	2	2	2	2	2	2	2	2	2	2
12pm-1pm	2	2	2	2	2	2	2	2	2	2	2	2	2	2
1pm-2pm	2	2	2	2	2	2	2	2	2	2	2	2	2	2
2pm-3pm	2	2	2	2	2	2	2	2	2	2	2	2	2	2
3pm-4pm	2	2	2	2	2	2	2	2	2	2	2	2	2	2
4pm-5pm	2	2	2	2	2	2	2	2	2	2	2	2	2	2
5pm-6pm	2	2	2	2	2	2	2	2	2	2	2	2	2	2
6pm-7pm	2	2	2	2	2	2	2	2	2	2	2	2	2	2
7pm-8pm	2	2	2	2	2	2	2	2	2	2	2	2	2	2
8pm-9pm	2	2	2	2	2	2	2	2	2	2	2	2	2	2
9pm-10pm	1	2	2	2	2	2	2	2	2	2	2	2	2	2
10pm-11pm	1	1	1	1	1	1	2	2	2	2	2	2	1	1
11pm-12am	1	1	1	1	1	1	1	1	1	1	1	1	1	1

Chart 19 – 04/01/2019

NOTES:

1) THE NEW YORK STATE THRUWAY SYSTEM IS A LIMITED ACCESS, HIGH-SPEED, HIGH-VOLUME HIGHWAY. TRAFFIC SHALL BE MAINTAINED IN ACCORDANCE WITH THE *MANUAL ON UNIFORM TRAFFIC CONTROL DEVICES (MUTCD)*, THE *WORK ZONE TRAFFIC CONTROL PLANS*, AND THE *STANDARD SPECIFICATIONS* SECTION 619 AS AMENDED BY THE AUTHORITY.

2) LANE CLOSURES ON THE THRUWAY MAINLINE SYSTEM SHALL ONLY BE ALLOWED IN ACCORDANCE WITH THESE TRAFFIC MANAGEMENT TABLE(S), UNLESS INDICATED OTHERWISE IN THE CONTRACT PLANS OR PROPOSAL DOCUMENTS.

3) IF THE TRAFFIC MANAGEMENT TABLE(S) INDICATE THERE ARE NO LANES AVAILABLE FOR CLOSURE WITHIN A CERTAIN TIME PERIOD, WORK IN SHOULDER CLOSURES (SHORT-DURATION, MOBILE AND SHORT- OR INTERMEDIATE-TERM) WILL ALSO BE PROHIBITED DURING THIS TIME. IF MORE THAN ONE TABLE IS APPLICABLE TO A WORK ZONE LOCATION, THE MOST RESTRICTIVE REQUIREMENTS SHALL BE USED. TRAFFIC MANAGEMENT TABLES DO NOT GUARANTEE LANE CLOSURE AVAILABILITY; THE REQUIREMENTS OF SECTION B. *WORK RESTRICTIONS* SHALL SUPERSEDE THESE TABLES, WHEN APPLICABLE.

NEW YORK STATE OF OPPORTUNITY. Thruway Authority

U.S. CUSTOMARY STANDARD SHEET

LANE CLOSURE CHARTS
NEW YORK DIVISION
(SHEET 23 OF 26)

APPROVED MAY 1, 2019

/S/ PATRICK THOMPSON, P.E.
DIRECTOR DESIGN SUPPORT SERVICES BUREAU

ISSUED UNDER DB 19-001

TA 619-30

I-95: INT 21/22 - CT (MP 14.4 - MP 15.0) **SPRING SEASON** MARCH 1 THRU MAY 10														
LANES REQUIRED TO BE MAINTAINED FOR TRAFFIC MANAGEMENT BY DAY OF WEEK & TIME OF DAY														
Time of Day	Mon		Tue		Wed		Thur		Fri		Sat		Sun	
	N	S	N	S	N	S	N	S	N	S	N	S	N	S
12am-1am	2	1	1	1	2	1	2	1	2	1	2	1	2	2
1am-2am	1	1	1	1	1	1	1	1	1	1	1	1	2	1
2am-3am	1	1	1	1	1	1	1	1	1	1	1	1	1	1
3am-4am	1	1	1	1	1	1	1	1	1	1	1	1	1	1
4am-5am	1	1	2	1	2	1	2	1	2	1	1	1	1	1
5am-6am	2	2	2	2	2	2	2	2	2	2	2	2	1	1
6am-7am	3	3	3	3	3	3	3	3	3	3	2	2	1	1
7am-8am	3	3	3	3	3	3	3	3	3	3	3	3	2	2
8am-9am	3	3	3	3	3	3	3	3	3	3	3	3	2	2
9am-10am	3	3	3	3	3	3	3	3	3	3	3	3	3	3
10am-11am	3	3	3	3	3	3	3	3	3	3	3	3	3	3
11am-12pm	3	3	3	3	3	3	3	3	3	3	3	3	3	3
12pm-1pm	3	3	3	3	3	3	3	3	3	3	3	3	3	3
1pm-2pm	3	3	3	3	3	3	3	3	3	3	3	3	3	3
2pm-3pm	3	3	3	3	3	3	3	3	3	3	3	3	3	3
3pm-4pm	3	3	3	3	3	3	3	3	3	3	3	3	3	3
4pm-5pm	3	3	3	3	3	3	3	3	3	3	3	3	3	3
5pm-6pm	3	3	3	3	3	3	3	3	3	3	3	3	3	3
6pm-7pm	3	3	3	3	3	3	3	3	3	3	3	3	3	3
7pm-8pm	3	3	3	3	3	3	3	3	3	3	3	3	3	3
8pm-9pm	2	2	3	2	3	2	3	3	3	3	3	3	3	3
9pm-10pm	2	2	2	2	3	2	3	2	3	3	3	2	3	2
10pm-11pm	2	2	2	2	2	2	2	2	2	3	3	2	2	2
11pm-12am	2	1	2	1	2	1	2	2	2	2	2	2	2	1

Chart 20 – 09/06/17 Also applies to all ramps, with a 2-lane maximum requirement.

I-95: INT 21/22 - CT (MP 14.4 - MP 15.0) **SUMMER SEASON** MAY 11 THRU SEPT. 15														
LANES REQUIRED TO BE MAINTAINED FOR TRAFFIC MANAGEMENT BY DAY OF WEEK & TIME OF DAY														
Time of Day	Mon		Tue		Wed		Thur		Fri		Sat		Sun	
	N	S	N	S	N	S	N	S	N	S	N	S	N	S
12am-1am	2	1	2	1	2	1	2	1	2	1	2	1	2	2
1am-2am	1	1	1	1	1	1	1	1	1	1	1	1	2	1
2am-3am	1	1	1	1	1	1	1	1	1	1	1	1	1	1
3am-4am	1	1	1	1	1	1	2	1	2	1	1	1	1	1
4am-5am	2	1	2	1	2	1	2	1	2	1	1	1	1	1
5am-6am	2	2	2	2	2	2	2	2	2	2	2	1	1	1
6am-7am	3	3	3	3	3	3	3	3	3	3	2	2	2	1
7am-8am	3	3	3	3	3	3	3	3	3	3	3	2	2	2
8am-9am	3	3	3	3	3	3	3	3	3	3	3	3	2	2
9am-10am	3	3	3	3	3	3	3	3	3	3	3	3	3	3
10am-11am	3	3	3	3	3	3	3	3	3	3	3	3	3	3
11am-12pm	3	3	3	3	3	3	3	3	3	3	3	3	3	3
12pm-1pm	3	3	3	3	3	3	3	3	3	3	3	3	3	3
1pm-2pm	3	3	3	3	3	3	3	3	3	3	3	3	3	3
2pm-3pm	3	3	3	3	3	3	3	3	3	3	3	3	3	3
3pm-4pm	3	3	3	3	3	3	3	3	3	3	3	3	3	3
4pm-5pm	3	3	3	3	3	3	3	3	3	3	3	3	3	3
5pm-6pm	3	3	3	3	3	3	3	3	3	3	3	3	3	3
6pm-7pm	3	3	3	3	3	3	3	3	3	3	3	3	3	3
7pm-8pm	3	3	3	3	3	3	3	3	3	3	3	3	3	3
8pm-9pm	3	2	3	2	3	3	3	3	3	3	3	3	3	3
9pm-10pm	2	2	2	2	3	2	3	2	3	3	3	3	3	3
10pm-11pm	2	2	2	2	2	2	2	2	3	2	2	2	3	3
11pm-12am	2	1	2	1	2	2	2	2	2	2	2	2	2	2

Chart 20 – 09/06/17 Also applies to all ramps, with a 2-lane maximum requirement.

NOTES:

1) THE NEW YORK STATE THRUWAY SYSTEM IS A LIMITED ACCESS, HIGH-SPEED, HIGH-VOLUME HIGHWAY. TRAFFIC SHALL BE MAINTAINED IN ACCORDANCE WITH THE *MANUAL ON UNIFORM TRAFFIC CONTROL DEVICES (MUTCD)*, THE *WORK ZONE TRAFFIC CONTROL PLANS*, AND THE *STANDARD SPECIFICATIONS* SECTION 619 AS AMENDED BY THE AUTHORITY.

2) LANE CLOSURES ON THE THRUWAY MAINLINE SYSTEM SHALL ONLY BE ALLOWED IN ACCORDANCE WITH THESE TRAFFIC MANAGEMENT TABLE(S), UNLESS INDICATED OTHERWISE IN THE CONTRACT PLANS OR PROPOSAL DOCUMENTS.

3) IF THE TRAFFIC MANAGEMENT TABLE(S) INDICATE THERE ARE NO LANES AVAILABLE FOR CLOSURE WITHIN A CERTAIN TIME PERIOD, WORK IN SHOULDER CLOSURES (SHORT-DURATION, MOBILE AND SHORT- OR INTERMEDIATE-TERM) WILL ALSO BE PROHIBITED DURING THIS TIME. IF MORE THAN ONE TABLE IS APPLICABLE TO A WORK ZONE LOCATION, THE MOST RESTRICTIVE REQUIREMENTS SHALL BE USED. TRAFFIC MANAGEMENT TABLES DO NOT GUARANTEE LANE CLOSURE AVAILABILITY; THE REQUIREMENTS OF SECTION B. *WORK RESTRICTIONS* SHALL SUPERSEDE THESE TABLES, WHEN APPLICABLE.

NEW YORK STATE OF OPPORTUNITY. Thruway Authority

U.S. CUSTOMARY STANDARD SHEET

LANE CLOSURE CHARTS
NEW YORK DIVISION
(SHEET 24 OF 26)

APPROVED MAY 1, 2019

/S/ PATRICK THOMPSON, P.E.
DIRECTOR DESIGN SUPPORT SERVICES BUREAU

ISSUED UNDER DB 19-001

TA 619-30

I-95: INT 21/22 - CT (MP 14.4 - MP 15.0) **FALL SEASON** SEPT 16 THRU NOV. 30														
LANES REQUIRED TO BE MAINTAINED FOR TRAFFIC MANAGEMENT BY DAY OF WEEK & TIME OF DAY														
Time of Day	Mon		Tue		Wed		Thur		Fri		Sat		Sun	
	N	S	N	S	N	S	N	S	N	S	N	S	N	S
12am-1am	1	1	1	1	1	1	1	1	2	1	2	1	2	2
1am-2am	1	1	1	1	1	1	1	1	1	1	1	1	1	1
2am-3am	1	1	1	1	1	1	1	1	1	1	1	1	1	1
3am-4am	1	1	1	1	1	1	1	1	1	1	1	1	1	1
4am-5am	1	1	1	1	2	1	2	1	2	1	1	1	1	1
5am-6am	2	2	2	2	2	2	2	2	2	2	1	1	1	1
6am-7am	3	3	3	3	3	3	3	3	3	3	2	2	1	1
7am-8am	3	3	3	3	3	3	3	3	3	3	2	2	2	2
8am-9am	3	3	3	3	3	3	3	3	3	3	3	3	2	2
9am-10am	3	3	3	3	3	3	3	3	3	3	3	3	3	3
10am-11am	3	3	3	3	3	3	3	3	3	3	3	3	3	3
11am-12pm	3	3	3	3	3	3	3	3	3	3	3	3	3	3
12pm-1pm	3	3	3	3	3	3	3	3	3	3	3	3	3	3
1pm-2pm	3	3	3	3	3	3	3	3	3	3	3	3	3	3
2pm-3pm	3	3	3	3	3	3	3	3	3	3	3	3	3	3
3pm-4pm	3	3	3	3	3	3	3	3	3	3	3	3	3	3
4pm-5pm	3	3	3	3	3	3	3	3	3	3	3	3	3	3
5pm-6pm	3	3	3	3	3	3	3	3	3	3	3	3	3	3
6pm-7pm	3	3	3	3	3	3	3	3	3	3	3	3	3	3
7pm-8pm	3	3	3	3	3	3	3	3	3	3	3	3	3	3
8pm-9pm	2	2	3	2	3	3	3	3	3	3	3	3	3	3
9pm-10pm	2	2	2	2	2	2	2	2	3	2	2	2	3	3
10pm-11pm	2	2	2	2	2	2	2	2	2	2	2	2	2	2
11pm-12am	2	1	2	1	2	1	2	2	2	2	2	2	2	2

Chart 20 – 09/06/17 Also applies to all ramps, with a 2-lane maximum requirement.

I-95: INT 21/22 - CT (MP 14.4 - MP 15.0) **WINTER SEASON** DEC. 1 THRU FEB. 29														
LANES REQUIRED TO BE MAINTAINED FOR TRAFFIC MANAGEMENT BY DAY OF WEEK & TIME OF DAY														
Time of Day	Mon		Tue		Wed		Thur		Fri		Sat		Sun	
	N	S	N	S	N	S	N	S	N	S	N	S	N	S
12am-1am	1	1	1	1	1	1	1	1	2	1	2	1	2	1
1am-2am	1	1	1	1	1	1	1	1	1	1	1	1	1	1
2am-3am	1	1	1	1	1	1	1	1	1	1	1	1	1	1
3am-4am	1	1	1	1	1	1	1	1	1	1	1	1	1	1
4am-5am	1	1	2	1	2	1	2	1	2	1	1	1	1	1
5am-6am	2	2	2	2	2	2	2	2	2	2	1	1	1	1
6am-7am	3	3	3	3	3	3	3	3	3	3	2	2	1	1
7am-8am	3	3	3	3	3	3	3	3	3	3	2	2	2	1
8am-9am	3	3	3	3	3	3	3	3	3	3	3	3	2	2
9am-10am	3	3	3	3	3	3	3	3	3	3	3	3	2	3
10am-11am	3	3	3	3	3	3	3	3	3	3	3	3	3	3
11am-12pm	3	3	3	3	3	3	3	3	3	3	3	3	3	3
12pm-1pm	3	3	3	3	3	3	3	3	3	3	3	3	3	3
1pm-2pm	3	3	3	3	3	3	3	3	3	3	3	3	3	3
2pm-3pm	3	3	3	3	3	3	3	3	3	3	3	3	3	3
3pm-4pm	3	3	3	3	3	3	3	3	3	3	3	3	3	3
4pm-5pm	3	3	3	3	3	3	3	3	3	3	3	3	3	3
5pm-6pm	3	3	3	3	3	3	3	3	3	3	3	3	3	3
6pm-7pm	3	3	3	3	3	3	3	3	3	3	3	3	3	3
7pm-8pm	3	3	3	3	3	3	3	3	3	3	3	3	3	3
8pm-9pm	2	2	2	2	2	3	3	2	3	3	3	2	3	2
9pm-10pm	2	2	2	2	2	2	2	2	2	2	2	2	2	2
10pm-11pm	2	2	2	2	2	2	2	2	2	2	2	2	2	2
11pm-12am	2	1	2	1	2	1	2	2	2	2	2	2	2	1

Chart 20 – 09/06/17 Also applies to all ramps, with a 2-lane maximum requirement.

NOTES:

1) THE NEW YORK STATE THRUWAY SYSTEM IS A LIMITED ACCESS, HIGH-SPEED, HIGH-VOLUME HIGHWAY. TRAFFIC SHALL BE MAINTAINED IN ACCORDANCE WITH THE *MANUAL ON UNIFORM TRAFFIC CONTROL DEVICES (MUTCD)*, THE *WORK ZONE TRAFFIC CONTROL PLANS*, AND THE *STANDARD SPECIFICATIONS* SECTION 619 AS AMENDED BY THE AUTHORITY.

2) LANE CLOSURES ON THE THRUWAY MAINLINE SYSTEM SHALL ONLY BE ALLOWED IN ACCORDANCE WITH THESE TRAFFIC MANAGEMENT TABLE(S), UNLESS INDICATED OTHERWISE IN THE CONTRACT PLANS OR PROPOSAL DOCUMENTS.

3) IF THE TRAFFIC MANAGEMENT TABLE(S) INDICATE THERE ARE NO LANES AVAILABLE FOR CLOSURE WITHIN A CERTAIN TIME PERIOD, WORK IN SHOULDER CLOSURES (SHORT-DURATION, MOBILE AND SHORT- OR INTERMEDIATE-TERM) WILL ALSO BE PROHIBITED DURING THIS TIME. IF MORE THAN ONE TABLE IS APPLICABLE TO A WORK ZONE LOCATION, THE MOST RESTRICTIVE REQUIREMENTS SHALL BE USED. TRAFFIC MANAGEMENT TABLES DO NOT GUARANTEE LANE CLOSURE AVAILABILITY; THE REQUIREMENTS OF SECTION B. *WORK RESTRICTIONS* SHALL SUPERSEDE THESE TABLES, WHEN APPLICABLE.

NEW YORK STATE OF OPPORTUNITY. Thruway Authority

U.S. CUSTOMARY STANDARD SHEET

LANE CLOSURE CHARTS
NEW YORK DIVISION
(SHEET 25 OF 26)

APPROVED MAY 1, 2019

/S/ PATRICK THOMPSON, P.E.
DIRECTOR DESIGN SUPPORT SERVICES BUREAU

ISSUED UNDER DB 19-001

TA 619-30

NEW ENGLAND THRUWAY (I-95)
LANE CLOSURE TAPER LOCATIONS

Due to the roadway curvature and proximity of interchange Ramps along the New England Thruway (I-95), the location of lane closure tapers shall be governed by the following tables. The contractor shall note that beginning a lane closure at any these locations may significantly increase the total length of the typical lane closure plan shown in the plans. The cost for any additional length of lane closures(s) shall be included in the price bid for the basic work zone traffic control item.

NORTHBOUND LANES

	LANE CLOSURE TYPE			
LANE CLOSURE TAPER LOCATION	LEFT LANE	ADDITIONAL LEFT LANE, IF NECESSARY *	RIGHT LANE	ADDITIONAL RIGHT LANE, IF NECESSARY *
NE 0.49			X	
NE 0.49	X		X	
NE 1.63 TO NE 1.88±	X			
NE 2.50 TO NE 2.55±	X			
NE 2.60				X
NE 2.80	X		X	
NE 3.35 TO NE 4.10±			X	
NE 3.85	X			
NE 4.10	X			
NE 4.90	X		X	
NE 5.32				X
NE 6.54	X		X	
NEW ROCHELLE TOLL PLAZA	X	X	X	X
NE 7.30 TO NE 7.50±			X	
NE 7.50		X		
NE 7.90 TO NE 8.18±	X			
NE 7.95 TO NE 8.47±			X	
NE 8.70	X			
NE 9.10 TO NE 9.35±	X		X	
NE 10.12				X
NE 10.50 TO NE 10.87±			X	
NE 10.92	X			
NE 11.35 TO NE 11.90±	X			
NE 11.76 TO 11.98±			X	
NE 11.82		X		
NE 12.40			X	
NE 12.49	X			
NE 12.92 TO NE 13.20±	X	X	X	
NE 13.80	X		X	
NE 14.21			X	

* A lane closure taper may begin at these locations only as a second lane closure in a double lane closure

SOUTHBOUND LANES

	LANE CLOSURE TYPE			
LANE CLOSURE TAPER LOCATION	LEFT LANE	ADDITIONAL LEFT LANE, IF NECESSARY *	RIGHT LANE	ADDITIONAL RIGHT LANE, IF NECESSARY *
CONNECTICUT 0.3	X		X	
NE 14.80 TO NE 14.72	X		X	
NE 14.10		X		X
NE 13.31 TO NE 13.00±			X	
NE 13.25 TO NE 13.00±	X			
NE 11.90 TO NE 11.80±	X		X	
NE 11.45	X			
NE 11.45 TO NE 10.95±			X	
NE 10.85 TO NE 10.50±	X			
NE 10.15	X		X	
NE 9.30 TO NE8.65±			X	
NE 9.30 TO NE 9.20±	X			
NE 8.90 TO NE 8.80±	X			
NE 8.48 TO NE 7.95±	X			
NE 8.18 TO NE 7.95±			X	
NE 7.50 TO NE 7.30±	X			
NE 7.50			X	
NE 6.65	X		X	
NE 6.22	X			
NE 5.98		X		
NE 5.67			X	
NE 4.15 TO NE 3.88±			X	
NE 4.15 TO NE 3.35±	X			
NE 2.80	X		X	
NE 2.50	X		X	
NE 2.32	X		X	
NE 1.96	X		X	
NE 1.14	X		X	

* A lane closure taper may begin at these locations only as a second lane closure in a double lane closure

NOTES:

1) THE NEW YORK STATE THRUWAY SYSTEM IS A LIMITED ACCESS, HIGH-SPEED, HIGH-VOLUME HIGHWAY. TRAFFIC SHALL BE MAINTAINED IN ACCORDANCE WITH THE *MANUAL ON UNIFORM TRAFFIC CONTROL DEVICES (MUTCD)*, THE *WORK ZONE TRAFFIC CONTROL PLANS*, AND THE *STANDARD SPECIFICATIONS* SECTION 619 AS AMENDED BY THE AUTHORITY.

2) LANE CLOSURES ON THE THRUWAY MAINLINE SYSTEM SHALL ONLY BE ALLOWED IN ACCORDANCE WITH THESE TRAFFIC MANAGEMENT TABLE(S), UNLESS INDICATED OTHERWISE IN THE CONTRACT PLANS OR PROPOSAL DOCUMENTS.

3) IF THE TRAFFIC MANAGEMENT TABLE(S) INDICATE THERE ARE NO LANES AVAILABLE FOR CLOSURE WITHIN A CERTAIN TIME PERIOD, WORK IN SHOULDER CLOSURES (SHORT-DURATION, MOBILE AND SHORT- OR INTERMEDIATE-TERM) WILL ALSO BE PROHIBITED DURING THIS TIME. IF MORE THAN ONE TABLE IS APPLICABLE TO A WORK ZONE LOCATION, THE MOST RESTRICTIVE REQUIREMENTS SHALL BE USED. TRAFFIC MANAGEMENT TABLES DO NOT GUARANTEE LANE CLOSURE AVAILABILITY; THE REQUIREMENTS OF SECTION B. *WORK RESTRICTIONS* SHALL SUPERSEDE THESE TABLES, WHEN APPLICABLE.

NEW YORK STATE OF OPPORTUNITY. Thruway Authority

U.S. CUSTOMARY STANDARD SHEET

LANE CLOSURE CHARTS
NEW YORK DIVISION
(SHEET 26 OF 26)

APPROVED MAY 1, 2019

/S/ PATRICK THOMPSON, P.E.
DIRECTOR DESIGN SUPPORT
SERVICES BUREAU

ISSUED UNDER DB 19-001

TA 619-30

I-87 NORTHBOUND INTERCHANGES 18 TO 19 (1,150 VEH/HR/LANE)

LANES REQUIRED TO BE OPEN BY HOUR AND TIME OF DAY

SPRING SEASON — MARCH 1 THRU MAY 20

HR/DAY	MON	TUES	WEDS	THUR	FRI	SAT	SUN
0	1	1	1	1	1	1	1
1	1	1	1	1	1	1	1
2	1	1	1	1	1	1	1
3	1	1	1	1	1	1	1
4	1	1	1	1	1	1	1
5	1	1	1	1	1	1	1
6	1	1	1	1	1	1	1
7	1	1	1	1	2	1	1
8	2	2	1	2	2	2	1
9	2	1	1	1	2	2	1
10	2	1	1	2	2	2	2
11	2	1	1	2	2	2	2
12	2	1	1	2	2	2	2
13	2	1	2	2	2	2	2
14	2	2	2	2	2	2	2
15	2	2	2	2	2	2	2
16	2	2	2	2	2	2	2
17	2	2	2	2	2	2	2
18	1	1	1	2	2	2	2
19	1	1	1	1	2	1	2
20	1	1	1	1	2	1	2
21	1	1	1	1	2	1	1
22	1	1	1	1	1	1	1
23	1	1	1	1	1	1	1

SUMMER SEASON — MAY 21 THRU SEPTEMBER 15

HR/DAY	MON	TUES	WEDS	THUR	FRI	SAT	SUN
0	1	1	1	1	1	1	1
1	1	1	1	1	1	1	1
2	1	1	1	1	1	1	1
3	1	1	1	1	1	1	1
4	1	1	1	1	1	1	1
5	1	1	1	1	1	1	1
6	1	1	1	1	1	1	1
7	2	1	1	2	2	2	1
8	2	2	2	2	2	2	1
9	2	1	2	2	2	2	2
10	2	2	2	2	2	2	2
11	2	2	2	2	2	2	2
12	2	2	2	2	2	2	2
13	2	2	2	2	2	2	2
14	2	2	2	2	2	2	2
15	2	2	2	2	2	2	2
16	2	2	2	2	2	2	2
17	2	2	2	2	2	2	2
18	1	1	2	2	2	2	2
19	1	1	2	2	2	2	2
20	1	1	1	2	2	1	2
21	1	1	1	2	2	1	1
22	1	1	1	1	2	1	1
23	1	1	1	1	1	1	1

LANES REQUIRED TO BE OPEN BY HOUR AND TIME OF DAY

FALL SEASON — SEPTEMBER 16 THRU November 30

HR/DAY	MON	TUES	WEDS	THUR	FRI	SAT	SUN
0	1	1	1	1	1	1	1
1	1	1	1	1	1	1	1
2	1	1	1	1	1	1	1
3	1	1	1	1	1	1	1
4	1	1	1	1	1	1	1
5	1	1	1	1	1	1	1
6	1	1	1	1	1	1	1
7	1	1	1	1	1	1	1
8	2	2	1	2	2	2	1
9	1	1	1	2	2	2	1
10	2	1	2	2	2	2	2
11	2	2	2	2	2	2	2
12	2	2	2	2	2	2	2
13	2	2	2	2	2	2	2
14	2	2	2	2	2	2	2
15	2	2	2	2	2	2	2
16	2	2	2	2	2	2	2
17	2	2	2	2	2	2	2
18	1	1	2	2	2	2	2
19	1	1	2	1	2	1	2
20	1	1	1	2	2	1	2
21	1	1	1	1	2	1	1
22	1	1	1	1	2	1	1
23	1	1	1	1	1	1	1

WINTER SEAS. — DECEMBER 1 THRU February 28

HR/DAY	MON	TUES	WEDS	THUR	FRI	SAT	SUN
0	1	1	1	1	1	1	1
1	1	1	1	1	1	1	1
2	1	1	1	1	1	1	1
3	1	1	1	1	1	1	1
4	1	1	1	1	1	1	1
5	1	1	1	1	1	1	1
6	1	1	1	1	1	1	1
7	1	1	2	1	2	2	1
8	2	2	2	2	2	2	2
9	1	1	2	1	2	2	2
10	2	1	2	2	2	2	2
11	2	2	2	2	2	2	2
12	2	2	2	2	2	2	2
13	2	2	2	2	2	2	2
14	2	2	2	2	2	2	2
15	2	2	2	2	2	2	2
16	2	2	2	2	2	2	2
17	2	2	2	2	2	2	2
18	1	1	1	2	2	1	2
19	1	1	1	1	2	1	1
20	1	1	1	1	2	1	1
21	1	1	1	1	2	1	1
22	1	1	1	1	2	1	1
23	1	1	1	1	1	1	1

I-87 SOUTHBOUND INTERCHANGES 19 TO 18 (1,150 VEH/HR/LANE)

LANES REQUIRED TO BE OPEN BY HOUR AND TIME OF DAY

SPRING SEASON — MARCH 1 THRU MAY 20

HR/DAY	MON	TUES	WEDS	THUR	FRI	SAT	SUN
0	1	1	1	1	1	1	1
1	1	1	1	1	1	1	1
2	1	1	1	1	1	1	1
3	1	1	1	1	1	1	1
4	1	1	1	1	1	1	1
5	1	1	1	1	1	1	1
6	1	1	1	1	1	1	1
7	1	1	1	1	1	1	1
8	2	1	1	1	1	1	1
9	2	1	1	2	2	2	2
10	2	1	1	2	2	2	2
11	2	1	1	2	2	2	2
12	2	1	1	2	2	2	2
13	2	1	1	2	2	2	2
14	2	2	2	2	2	2	2
15	2	2	2	2	2	2	2
16	2	2	2	2	2	2	2
17	2	2	2	2	2	2	2
18	1	1	1	2	2	2	2
19	1	1	1	1	2	1	2
20	1	1	1	1	1	1	2
21	1	1	1	1	1	1	1
22	1	1	1	1	1	1	1
23	1	1	1	1	1	1	1

SUMMER SEASON — MAY 21 THRU SEPTEMBER 15

HR/DAY	MON	TUES	WEDS	THUR	FRI	SAT	SUN
0	1	1	1	1	1	1	1
1	1	1	1	1	1	1	1
2	1	1	1	1	1	1	1
3	1	1	1	1	1	1	1
4	1	1	1	1	1	1	1
5	1	1	1	1	1	1	1
6	1	1	1	1	1	1	1
7	2	2	1	1	1	1	1
8	2	2	2	2	2	2	2
9	2	2	2	2	2	2	2
10	2	2	2	2	2	2	2
11	2	2	2	2	2	2	2
12	2	2	2	2	2	2	2
13	2	2	2	2	2	2	2
14	2	2	2	2	2	2	2
15	2	2	2	2	2	2	2
16	2	2	2	2	2	2	2
17	2	2	2	2	2	2	2
18	2	2	2	2	2	2	2
19	2	1	1	1	2	2	2
20	2	1	1	1	1	2	2
21	2	1	1	1	1	1	2
22	1	1	1	1	1	1	2
23	1	1	1	1	1	1	1

LANES REQUIRED TO BE OPEN BY HOUR AND TIME OF DAY

FALL SEASON — SEPTEMBER 16 THRU November 30

HR/DAY	MON	TUES	WEDS	THUR	FRI	SAT	SUN
0	1	1	1	1	1	1	1
1	1	1	1	1	1	1	1
2	1	1	1	1	1	1	1
3	1	1	1	1	1	1	1
4	1	1	1	1	1	1	1
5	1	1	1	1	1	1	1
6	1	1	1	1	1	1	1
7	2	1	1	1	1	1	1
8	2	2	1	1	1	1	1
9	2	2	2	2	2	2	2
10	2	2	2	2	2	2	2
11	2	2	2	2	2	2	2
12	2	2	2	2	2	2	2
13	2	2	2	2	2	2	2
14	2	2	2	2	2	2	2
15	2	2	2	2	2	2	2
16	2	2	2	2	2	2	2
17	2	2	2	2	2	2	2
18	2	2	2	1	2	2	2
19	2	1	1	1	2	2	2
20	1	1	1	1	1	1	2
21	1	1	1	1	1	1	2
22	1	1	1	1	1	1	1
23	1	1	1	1	1	1	1

WINTER SEAS. — DECEMBER 1 THRU February 28

HR/DAY	MON	TUES	WEDS	THUR	FRI	SAT	SUN
0	1	1	1	1	1	1	1
1	1	1	1	1	1	1	1
2	1	1	1	1	1	1	1
3	1	1	1	1	1	1	1
4	1	1	1	1	1	1	1
5	1	1	1	1	1	1	1
6	1	1	1	1	1	1	1
7	1	1	1	1	1	1	1
8	1	2	2	2	1	1	1
9	2	2	2	2	2	2	1
10	2	2	2	2	2	2	2
11	2	2	2	2	2	2	2
12	2	2	2	2	2	2	2
13	2	2	2	2	2	2	2
14	2	2	2	2	2	2	2
15	2	2	2	2	2	2	2
16	2	2	2	2	2	2	2
17	2	2	2	2	2	2	2
18	2	2	2	2	2	2	2
19	2	1	1	1	1	1	2
20	1	1	1	1	1	1	2
21	1	1	1	1	1	1	1
22	1	1	1	1	1	1	1
23	1	1	1	1	1	1	1

NOTES:

1) THE NEW YORK STATE THRUWAY IS A LIMITED ACCESS, HIGH-SPEED, HIGH-VOLUME HIGHWAY. TRAFFIC SHALL BE MAINTAINED IN ACCORDANCE WITH THE *MANUAL ON UNIFORM TRAFFIC CONTROL DEVICES (MUTCD)*, THE *WORK ZONE TRAFFIC CONTROL PLANS*, AND THE *STANDARD SPECIFICATIONS* SECTION 619 AS AMENDED BY THE AUTHORITY.

2) LANE CLOSURES ON THE THRUWAY SHALL ONLY BE ALLOWED IN ACCORDANCE WITH THESE TRAFFIC MANAGEMENT TABLE(S), UNLESS INDICATED OTHERWISE IN THE CONTRACT PLANS OR PROPOSAL DOCUMENTS.

3) LANE CLOSURE CHARTS SHALL APPLY AS FOLLOWS:

- 1,150 VEH/HR/LANE: APPLIES TO ALL WORK REQUIRING LANE CLOSURE(S) EXCEPT AS PERMITTED BELOW.

- 1,300 VEH/HR/LANE: APPLIES TO NON-EVASIVE WORK WHERE WORKERS AND/OR EQUIPMENT ARE LOCATED 4 FT. OR MORE FROM TRAVEL (SPACE) LANE, OR AS APPROVED BY THE THRUWAY PROJECT ENGINEER. WORK SHOULD BE ABLE TO BE IMMEDIATELY STOPPED AND LANE CLOSURE(S) REMOVED IN THE EVENT QUEUES, GREATER THAN 1 MILE, DEVELOP.

NEW YORK STATE OF OPPORTUNITY. Thruway Authority

U.S. CUSTOMARY STANDARD SHEET

LANE CLOSURE CHARTS
1150 VEHICLES PER HOUR
ALBANY DIVISION
(SHEET 1 OF 18)

APPROVED SEPTEMBER 1, 2018

/S/ PATRICK THOMPSON, P.E.
DIRECTOR DESIGN SUPPORT SERVICES BUREAU

ISSUED UNDER DB 18-003

TA 619-31

I-87 NORTHBOUND INTERCHANGES 19 TO 20 (1,150 VEH/HR/LANE)

LANES REQUIRED TO BE OPEN BY HOUR AND TIME OF DAY

SPRING SEASON MARCH 1 THRU MAY 20

HR/DAY	MON	TUES	WEDS	THUR	FRI	SAT	SUN
0	1	1	1	1	1	1	1
1	1	1	1	1	1	1	1
2	1	1	1	1	1	1	1
3	1	1	1	1	1	1	1
4	1	1	1	1	1	1	1
5	1	1	1	1	1	1	1
6	1	1	1	1	1	1	1
7	1	1	1	1	1	1	1
8	1	1	1	1	2	2	1
9	1	1	1	1	2	2	1
10	2	1	1	1	2	2	2
11	2	1	1	2	2	2	2
12	2	1	1	2	2	2	2
13	2	1	2	2	2	2	2
14	2	2	2	2	2	2	2
15	2	2	2	2	2	2	2
16	2	2	2	2	2	2	2
17	2	2	2	2	2	2	2
18	1	1	1	2	2	1	2
19	1	1	1	1	2	1	2
20	1	1	1	1	2	1	2
21	1	1	1	1	2	1	1
22	1	1	1	1	1	1	1
23	1	1	1	1	1	1	1

SUMMER SEASON MAY 21 THRU SEPTEMBER 15

HR/DAY	MON	TUES	WEDS	THUR	FRI	SAT	SUN
0	1	1	1	1	1	1	1
1	1	1	1	1	1	1	1
2	1	1	1	1	1	1	1
3	1	1	1	1	1	1	1
4	1	1	1	1	1	1	1
5	1	1	1	1	1	1	1
6	1	1	1	1	1	1	1
7	2	1	1	2	2	2	1
8	2	1	2	2	2	2	1
9	2	1	2	2	2	2	2
10	2	2	2	2	2	2	2
11	2	2	2	2	2	2	2
12	2	2	2	2	2	2	2
13	2	2	2	2	2	2	2
14	2	2	2	2	2	2	2
15	2	2	2	2	2	2	2
16	2	2	2	2	2	2	2
17	2	2	2	2	2	2	2
18	1	1	2	2	2	2	2
19	1	1	1	2	2	2	2
20	1	1	1	2	2	1	2
21	1	1	1	2	2	1	1
22	1	1	1	1	2	1	1
23	1	1	1	1	1	1	1

LANES REQUIRED TO BE OPEN BY HOUR AND TIME OF DAY

FALL SEASON SEPTEMBER 16 THRU November 30

HR/DAY	MON	TUES	WEDS	THUR	FRI	SAT	SUN
0	1	1	1	1	1	1	1
1	1	1	1	1	1	1	1
2	1	1	1	1	1	1	1
3	1	1	1	1	1	1	1
4	1	1	1	1	1	1	1
5	1	1	1	1	1	1	1
6	1	1	1	1	1	1	1
7	1	1	1	1	1	1	1
8	1	1	1	1	1	2	1
9	1	1	1	2	2	2	1
10	2	1	1	2	2	2	2
11	2	1	2	2	2	2	2
12	2	2	2	2	2	2	2
13	2	2	2	2	2	2	2
14	2	2	2	2	2	2	2
15	2	2	2	2	2	2	2
16	2	2	2	2	2	2	2
17	2	2	2	2	2	2	2
18	1	1	2	1	2	2	2
19	1	1	1	1	2	1	2
20	1	1	1	1	2	1	2
21	1	1	1	1	2	1	1
22	1	1	1	1	2	1	1
23	1	1	1	1	1	1	1

WINTER SEAS. DECEMBER 1 THRU February 28

HR/DAY	MON	TUES	WEDS	THUR	FRI	SAT	SUN
0	1	1	1	1	1	1	1
1	1	1	1	1	1	1	1
2	1	1	1	1	1	1	1
3	1	1	1	1	1	1	1
4	1	1	1	1	1	1	1
5	1	1	1	1	1	1	1
6	1	1	1	1	1	1	1
7	1	1	1	1	1	1	1
8	1	1	1	1	2	2	1
9	1	1	1	1	2	2	1
10	2	1	2	1	2	2	2
11	2	2	2	2	2	2	2
12	2	2	2	2	2	2	2
13	2	2	2	2	2	2	2
14	2	2	2	2	2	2	2
15	2	2	2	2	2	2	2
16	2	2	2	2	2	2	2
17	2	2	2	2	2	2	2
18	1	1	1	2	2	1	2
19	1	1	1	1	2	1	1
20	1	1	1	1	2	1	1
21	1	1	1	1	2	1	1
22	1	1	1	1	2	1	1
23	1	1	1	1	1	1	1

I-87 SOUTHBOUND INTERCHANGES 20 TO 19 (1,150 VEH/HR/LANE)

LANES REQUIRED TO BE OPEN BY HOUR AND TIME OF DAY

SPRING SEASON MARCH 1 THRU MAY 20

HR/DAY	MON	TUES	WEDS	THUR	FRI	SAT	SUN
0	1	1	1	1	1	1	1
1	1	1	1	1	1	1	1
2	1	1	1	1	1	1	1
3	1	1	1	1	1	1	1
4	1	1	1	1	1	1	1
5	1	1	1	1	1	1	1
6	1	1	1	1	1	1	1
7	1	1	1	2	1	1	1
8	2	2	2	1	2	1	1
9	2	1	2	2	2	2	1
10	2	1	1	2	2	2	2
11	2	1	1	2	2	2	2
12	2	1	1	2	2	2	2
13	2	1	1	2	2	2	2
14	2	1	1	2	2	2	2
15	2	2	2	2	2	2	2
16	2	2	2	2	2	2	2
17	2	2	2	2	2	2	2
18	1	1	1	2	2	1	2
19	1	1	1	1	2	1	2
20	1	1	1	1	1	1	2
21	1	1	1	1	1	1	1
22	1	1	1	1	1	1	1
23	1	1	1	1	1	1	1

SUMMER SEASON MAY 21 THRU SEPTEMBER 15

HR/DAY	MON	TUES	WEDS	THUR	FRI	SAT	SUN
0	1	1	1	1	1	1	1
1	1	1	1	1	1	1	1
2	1	1	1	1	1	1	1
3	1	1	1	1	1	1	1
4	1	1	1	1	1	1	1
5	1	1	1	1	1	1	1
6	1	1	1	1	1	1	1
7	2	1	1	1	2	1	1
8	2	2	2	2	2	2	1
9	2	2	2	2	2	2	2
10	2	2	2	2	2	2	2
11	2	2	2	2	2	2	2
12	2	2	2	2	2	2	2
13	2	2	2	2	2	2	2
14	2	2	2	2	2	2	2
15	2	2	2	2	2	2	2
16	2	2	2	2	2	2	2
17	2	2	2	2	2	2	2
18	2	2	2	2	2	2	2
19	2	1	1	1	2	2	2
20	2	1	1	1	1	1	2
21	1	1	1	1	1	1	2
22	1	1	1	1	1	1	1
23	1	1	1	1	1	1	1

LANES REQUIRED TO BE OPEN BY HOUR AND TIME OF DAY

FALL SEASON SEPTEMBER 16 THRU November 30

HR/DAY	MON	TUES	WEDS	THUR	FRI	SAT	SUN
0	1	1	1	1	1	1	1
1	1	1	1	1	1	1	1
2	1	1	1	1	1	1	1
3	1	1	1	1	1	1	1
4	1	1	1	1	1	1	1
5	1	1	1	1	1	1	1
6	1	1	1	1	1	1	1
7	1	1	1	2	1	1	1
8	2	2	1	1	2	1	1
9	2	1	1	2	2	2	2
10	2	2	2	2	2	2	2
11	2	2	2	2	2	2	2
12	2	2	2	2	2	2	2
13	2	2	2	2	2	2	2
14	2	2	2	2	2	2	2
15	2	2	2	2	2	2	2
16	2	2	2	2	2	2	2
17	2	2	2	2	2	2	2
18	2	2	1	1	2	2	2
19	1	1	1	1	2	1	2
20	1	1	1	1	1	1	2
21	1	1	1	1	1	1	1
22	1	1	1	1	1	1	1
23	1	1	1	1	1	1	1

WINTER SEAS. DECEMBER 1 THRU February 28

HR/DAY	MON	TUES	WEDS	THUR	FRI	SAT	SUN
0	1	1	1	1	1	1	1
1	1	1	1	1	1	1	1
2	1	1	1	1	1	1	1
3	1	1	1	1	1	1	1
4	1	1	1	1	1	1	1
5	1	1	1	1	1	1	1
6	1	1	1	1	1	1	1
7	1	2	1	1	1	1	1
8	2	2	2	2	1	1	1
9	2	1	2	1	2	2	1
10	2	2	2	1	2	2	2
11	2	2	2	2	2	2	2
12	2	2	2	2	2	2	2
13	2	2	2	2	2	2	2
14	2	2	2	2	2	2	2
15	2	2	2	2	2	2	2
16	2	2	2	2	2	2	2
17	2	2	2	2	2	2	2
18	2	1	1	1	2	1	2
19	1	1	1	1	1	1	2
20	1	1	1	1	1	1	1
21	1	1	1	1	1	1	1
22	1	1	1	1	1	1	1
23	1	1	1	1	1	1	1

NOTES:

1) THE NEW YORK STATE THRUWAY IS A LIMITED ACCESS, HIGH-SPEED, HIGH-VOLUME HIGHWAY. TRAFFIC SHALL BE MAINTAINED IN ACCORDANCE WITH THE *MANUAL ON UNIFORM TRAFFIC CONTROL DEVICES (MUTCD)*, THE *WORK ZONE TRAFFIC CONTROL PLANS*, AND THE *STANDARD SPECIFICATIONS* SECTION 619 AS AMENDED BY THE AUTHORITY.

2) LANE CLOSURES ON THE THRUWAY SHALL ONLY BE ALLOWED IN ACCORDANCE WITH THESE TRAFFIC MANAGEMENT TABLE(S), UNLESS INDICATED OTHERWISE IN THE CONTRACT PLANS OR PROPOSAL DOCUMENTS.

3) LANE CLOSURE CHARTS SHALL APPLY AS FOLLOWS:

- 1,150 VEH/HR/LANE: APPLIES TO ALL WORK REQUIRING LANE CLOSURE(S) EXCEPT AS PERMITTED BELOW.

- 1,300 VEH/HR/LANE: APPLIES TO NON-EVASIVE WORK WHERE WORKERS AND/OR EQUIPMENT ARE LOCATED 4 FT. OR MORE FROM TRAVEL (SPACE) LANE, OR AS APPROVED BY THE THRUWAY PROJECT ENGINEER. WORK SHOULD BE ABLE TO BE IMMEDIATELY STOPPED AND LANE CLOSURE(S) REMOVED IN THE EVENT QUEUES, GREATER THAN 1 MILE, DEVELOP.

NEW YORK STATE OF OPPORTUNITY. Thruway Authority

U.S. CUSTOMARY STANDARD SHEET

LANE CLOSURE CHARTS
1,150 VEHICLES PER HOUR
ALBANY DIVISION
(SHEET 2 OF 18)

APPROVED SEPTEMBER 1, 2018

/S/ PATRICK THOMPSON, P.E.
DIRECTOR DESIGN SUPPORT SERVICES BUREAU

ISSUED UNDER DB 18-003

TA 619-31

I-87 NORTHBOUND INTERCHANGES 20 TO 21 (1,150 VEH/HR/LANE)

LANES REQUIRED TO BE OPEN BY HOUR AND TIME OF DAY

SPRING SEASON MARCH 1 THRU MAY 20

HR/DAY	MON	TUES	WEDS	THUR	FRI	SAT	SUN
0	1	1	1	1	1	1	1
1	1	1	1	1	1	1	1
2	1	1	1	1	1	1	1
3	1	1	1	1	1	1	1
4	1	1	1	1	1	1	1
5	1	1	1	1	1	1	1
6	1	1	1	1	1	1	1
7	1	1	1	1	1	1	1
8	1	1	1	1	1	1	1
9	1	1	1	1	1	2	1
10	1	1	1	1	2	2	1
11	2	1	1	1	2	2	2
12	2	1	1	2	2	2	2
13	2	1	1	2	2	2	2
14	2	1	1	2	2	2	2
15	2	1	2	2	2	2	2
16	2	2	2	2	2	2	2
17	2	1	1	2	2	1	2
18	1	1	1	1	2	1	2
19	1	1	1	1	2	1	2
20	1	1	1	1	2	1	2
21	1	1	1	1	2	1	1
22	1	1	1	1	1	1	1
23	1	1	1	1	1	1	1

SUMMER SEASON MAY 21 THRU SEPTEMBER 15

HR/DAY	MON	TUES	WEDS	THUR	FRI	SAT	SUN
0	1	1	1	1	1	1	1
1	1	1	1	1	1	1	1
2	1	1	1	1	1	1	1
3	1	1	1	1	1	1	1
4	1	1	1	1	1	1	1
5	1	1	1	1	1	1	1
6	1	1	1	1	1	1	1
7	2	1	1	1	1	1	1
8	2	1	1	2	2	2	1
9	2	1	1	2	2	2	2
10	2	1	2	2	2	2	2
11	2	2	2	2	2	2	2
12	2	2	2	2	2	2	2
13	2	2	2	2	2	2	2
14	2	2	2	2	2	2	2
15	2	2	2	2	2	2	2
16	2	2	2	2	2	2	2
17	2	2	2	2	2	2	2
18	1	1	2	2	2	2	2
19	1	1	1	2	2	1	2
20	1	1	1	2	2	1	2
21	1	1	1	1	2	1	1
22	1	1	1	1	2	1	1
23	1	1	1	1	1	1	1

LANES REQUIRED TO BE OPEN BY HOUR AND TIME OF DAY

FALL SEASON SEPTEMBER 16 THRU November 30

HR/DAY	MON	TUES	WEDS	THUR	FRI	SAT	SUN
0	1	1	1	1	1	1	1
1	1	1	1	1	1	1	1
2	1	1	1	1	1	1	1
3	1	1	1	1	1	1	1
4	1	1	1	1	1	1	1
5	1	1	1	1	1	1	1
6	1	1	1	1	1	1	1
7	1	1	1	1	1	1	1
8	1	1	1	1	1	1	1
9	1	1	1	2	2	2	1
10	1	1	1	2	2	2	2
11	2	1	1	2	2	2	2
12	2	2	2	2	2	2	2
13	2	2	2	2	2	2	2
14	2	2	2	2	2	2	2
15	2	2	2	2	2	2	2
16	2	2	2	2	2	2	2
17	2	2	2	2	2	2	2
18	1	1	1	1	2	1	2
19	1	1	1	1	2	1	2
20	1	1	1	1	2	1	2
21	1	1	1	1	2	1	1
22	1	1	1	1	1	1	1
23	1	1	1	1	1	1	1

WINTER SEAS. DECEMBER 1 THRU February 28

HR/DAY	MON	TUES	WEDS	THUR	FRI	SAT	SUN
0	1	1	1	1	1	1	1
1	1	1	1	1	1	1	1
2	1	1	1	1	1	1	1
3	1	1	1	1	1	1	1
4	1	1	1	1	1	1	1
5	1	1	1	1	1	1	1
6	1	1	1	1	1	1	1
7	1	1	1	1	1	1	1
8	1	1	1	1	1	1	1
9	1	1	1	1	1	2	1
10	1	1	1	1	2	2	1
11	2	1	2	2	2	2	2
12	2	2	2	2	2	2	2
13	2	2	2	2	2	2	2
14	2	2	2	2	2	2	2
15	2	2	2	2	2	2	2
16	2	2	2	2	2	2	2
17	2	1	2	2	2	1	2
18	1	1	1	1	2	1	2
19	1	1	1	1	2	1	1
20	1	1	1	1	2	1	1
21	1	1	1	1	2	1	1
22	1	1	1	1	2	1	1
23	1	1	1	1	1	1	1

I-87 SOUTHBOUND INTERCHANGES 21 TO 20 (1,150 VEH/HR/LANE)

LANES REQUIRED TO BE OPEN BY HOUR AND TIME OF DAY

SPRING SEASON MARCH 1 THRU MAY 20

HR/DAY	MON	TUES	WEDS	THUR	FRI	SAT	SUN
0	1	1	1	1	1	1	1
1	1	1	1	1	1	1	1
2	1	1	1	1	1	1	1
3	1	1	1	1	1	1	1
4	1	1	1	1	1	1	1
5	1	1	1	1	1	1	1
6	1	1	1	1	1	1	1
7	1	1	1	1	1	1	1
8	1	1	1	1	1	1	1
9	1	1	1	1	2	2	1
10	1	1	1	1	2	2	2
11	1	1	1	1	2	2	2
12	2	1	1	1	2	2	2
13	1	1	1	1	2	2	2
14	1	1	1	2	2	2	2
15	1	1	1	2	2	2	2
16	2	2	2	2	2	2	2
17	1	1	1	2	2	2	2
18	1	1	1	1	2	1	2
19	1	1	1	1	1	1	2
20	1	1	1	1	1	1	1
21	1	1	1	1	1	1	1
22	1	1	1	1	1	1	1
23	1	1	1	1	1	1	1

SUMMER SEASON MAY 21 THRU SEPTEMBER 15

HR/DAY	MON	TUES	WEDS	THUR	FRI	SAT	SUN
0	1	1	1	1	1	1	1
1	1	1	1	1	1	1	1
2	1	1	1	1	1	1	1
3	1	1	1	1	1	1	1
4	1	1	1	1	1	1	1
5	1	1	1	1	1	1	1
6	1	1	1	1	1	1	1
7	1	1	1	1	1	1	1
8	2	1	1	1	1	2	1
9	2	2	1	2	2	2	2
10	2	2	2	2	2	2	2
11	2	2	2	2	2	2	2
12	2	2	2	2	2	2	2
13	2	2	2	2	2	2	2
14	2	2	2	2	2	2	2
15	2	2	2	2	2	2	2
16	2	2	2	2	2	2	2
17	2	2	2	2	2	2	2
18	2	1	1	2	2	2	2
19	2	1	1	1	2	1	2
20	2	1	1	1	1	1	2
21	1	1	1	1	1	1	2
22	1	1	1	1	1	1	1
23	1	1	1	1	1	1	1

LANES REQUIRED TO BE OPEN BY HOUR AND TIME OF DAY

FALL SEASON SEPTEMBER 16 THRU November 30

HR/DAY	MON	TUES	WEDS	THUR	FRI	SAT	SUN
0	1	1	1	1	1	1	1
1	1	1	1	1	1	1	1
2	1	1	1	1	1	1	1
3	1	1	1	1	1	1	1
4	1	1	1	1	1	1	1
5	1	1	1	1	1	1	1
6	1	1	1	1	1	1	1
7	1	1	1	1	1	1	1
8	1	1	1	1	1	1	1
9	2	1	1	2	1	2	2
10	2	1	1	2	2	2	2
11	2	1	2	2	2	2	2
12	2	2	2	2	2	2	2
13	2	2	2	2	2	2	2
14	2	2	2	1	2	2	2
15	2	2	2	2	2	2	2
16	2	2	2	2	2	2	2
17	2	2	2	2	2	2	2
18	2	2	1	1	2	1	2
19	1	1	1	1	1	1	2
20	1	1	1	1	1	1	2
21	1	1	1	1	1	1	1
22	1	1	1	1	1	1	1
23	1	1	1	1	1	1	1

WINTER SEAS. DECEMBER 1 THRU February 28

HR/DAY	MON	TUES	WEDS	THUR	FRI	SAT	SUN
0	1	1	1	1	1	1	1
1	1	1	1	1	1	1	1
2	1	1	1	1	1	1	1
3	1	1	1	1	1	1	1
4	1	1	1	1	1	1	1
5	1	1	1	1	1	1	1
6	1	1	1	1	1	1	1
7	1	1	1	1	1	1	1
8	1	1	1	1	1	1	1
9	1	1	1	1	1	2	1
10	2	1	2	1	2	2	2
11	2	2	2	2	2	2	2
12	2	2	2	2	2	2	2
13	2	2	2	2	2	2	2
14	2	2	2	2	2	2	2
15	2	2	2	2	2	2	2
16	2	2	2	2	2	2	2
17	2	2	2	2	2	1	2
18	2	1	1	1	2	1	2
19	1	1	1	1	1	1	2
20	1	1	1	1	1	1	1
21	1	1	1	1	1	1	1
22	1	1	1	1	1	1	1
23	1	1	1	1	1	1	1

NOTES:

1) THE NEW YORK STATE THRUWAY IS A LIMITED ACCESS, HIGH-SPEED, HIGH-VOLUME HIGHWAY. TRAFFIC SHALL BE MAINTAINED IN ACCORDANCE WITH THE *MANUAL ON UNIFORM TRAFFIC CONTROL DEVICES (MUTCD)*, THE *WORK ZONE TRAFFIC CONTROL PLANS*, AND THE *STANDARD SPECIFICATIONS* SECTION 619 AS AMENDED BY THE AUTHORITY.

2) LANE CLOSURES ON THE THRUWAY SHALL ONLY BE ALLOWED IN ACCORDANCE WITH THESE TRAFFIC MANAGEMENT TABLE(S), UNLESS INDICATED OTHERWISE IN THE CONTRACT PLANS OR PROPOSAL DOCUMENTS.

3) LANE CLOSURE CHARTS SHALL APPLY AS FOLLOWS:

- 1,150 VEH/HR/LANE: APPLIES TO ALL WORK REQUIRING LANE CLOSURE(S) EXCEPT AS PERMITTED BELOW.

- 1,300 VEH/HR/LANE: APPLIES TO NON-EVASIVE WORK WHERE WORKERS AND/OR EQUIPMENT ARE LOCATED 4 FT. OR MORE FROM TRAVEL (SPACE) LANE, OR AS APPROVED BY THE THRUWAY PROJECT ENGINEER. WORK SHOULD BE ABLE TO BE IMMEDIATELY STOPPED AND LANE CLOSURE(S) REMOVED IN THE EVENT QUEUES, GREATER THAN 1 MILE, DEVELOP.

NEW YORK STATE OF OPPORTUNITY. Thruway Authority

U.S. CUSTOMARY STANDARD SHEET

LANE CLOSURE CHARTS
1,150 VEHICLES PER HOUR
ALBANY DIVISION
(SHEET 3 OF 18)

APPROVED SEPTEMBER 1, 2018

/S/ PATRICK THOMPSON, P.E.
DIRECTOR DESIGN SUPPORT SERVICES BUREAU

ISSUED UNDER DB 18-003

TA 619-31

I-87 NORTHBOUND INTERCHANGES 21 TO 21B (1,150 VEH/HR/LANE)

LANES REQUIRED TO BE OPEN BY HOUR AND TIME OF DAY

SPRING SEASON MARCH 1 THRU MAY 20

HR/DAY	MON	TUES	WEDS	THUR	FRI	SAT	SUN
0	1	1	1	1	1	1	1
1	1	1	1	1	1	1	1
2	1	1	1	1	1	1	1
3	1	1	1	1	1	1	1
4	1	1	1	1	1	1	1
5	1	1	1	1	1	1	1
6	1	1	1	1	1	1	1
7	1	1	1	1	1	1	1
8	2	1	1	1	1	1	1
9	1	1	1	1	1	2	1
10	2	1	1	1	2	2	1
11	2	1	1	1	2	2	2
12	2	1	1	2	2	2	2
13	2	1	1	2	2	2	2
14	2	1	2	2	2	2	2
15	2	2	2	2	2	2	2
16	2	2	2	2	2	2	2
17	2	1	1	2	2	1	2
18	1	1	1	1	2	1	2
19	1	1	1	1	2	1	2
20	1	1	1	1	2	1	2
21	1	1	1	1	1	1	1
22	1	1	1	1	1	1	1
23	1	1	1	1	1	1	1

SUMMER SEASON MAY 21 THRU SEPTEMBER 15

HR/DAY	MON	TUES	WEDS	THUR	FRI	SAT	SUN
0	1	1	1	1	1	1	1
1	1	1	1	1	1	1	1
2	1	1	1	1	1	1	1
3	1	1	1	1	1	1	1
4	1	1	1	1	1	1	1
5	1	1	1	1	1	1	1
6	1	1	1	1	1	1	1
7	2	1	1	2	2	1	1
8	2	1	2	2	2	2	1
9	2	1	2	2	2	2	1
10	2	1	2	2	2	2	2
11	2	2	2	2	2	2	2
12	2	2	2	2	2	2	2
13	2	2	2	2	2	2	2
14	2	2	2	2	2	2	2
15	2	2	2	2	2	2	2
16	2	2	2	2	2	2	2
17	2	2	2	2	2	2	2
18	1	1	1	2	2	2	2
19	1	1	1	2	2	1	2
20	1	1	1	2	2	1	2
21	1	1	1	1	2	1	1
22	1	1	1	1	2	1	1
23	1	1	1	1	1	1	1

LANES REQUIRED TO BE OPEN BY HOUR AND TIME OF DAY

FALL SEASON SEPTEMBER 16 THRU November 30

HR/DAY	MON	TUES	WEDS	THUR	FRI	SAT	SUN
0	1	1	1	1	1	1	1
1	1	1	1	1	1	1	1
2	1	1	1	1	1	1	1
3	1	1	1	1	1	1	1
4	1	1	1	1	1	1	1
5	1	1	1	1	1	1	1
6	1	1	1	1	1	1	1
7	1	1	1	1	1	1	1
8	1	1	1	1	1	1	1
9	1	1	1	1	1	2	1
10	1	1	1	2	2	2	2
11	2	1	1	2	2	2	2
12	2	2	2	2	2	2	2
13	2	2	2	2	2	2	2
14	2	2	2	2	2	2	2
15	2	2	2	2	2	2	2
16	2	2	2	2	2	2	2
17	2	2	2	2	2	2	2
18	1	1	1	1	2	1	2
19	1	1	1	1	2	1	2
20	1	1	1	1	2	1	2
21	1	1	1	1	2	1	1
22	1	1	1	1	1	1	1
23	1	1	1	1	1	1	1

WINTER SEAS. DECEMBER 1 THRU February 28

HR/DAY	MON	TUES	WEDS	THUR	FRI	SAT	SUN
0	1	1	1	1	1	1	1
1	1	1	1	1	1	1	1
2	1	1	1	1	1	1	1
3	1	1	1	1	1	1	1
4	1	1	1	1	1	1	1
5	1	1	1	1	1	1	1
6	1	1	1	1	1	1	1
7	1	1	1	1	1	1	1
8	1	1	1	1	1	1	1
9	1	1	1	1	1	1	1
10	1	1	1	1	2	2	1
11	2	1	2	1	2	2	2
12	2	1	2	2	2	2	2
13	2	1	2	2	2	2	2
14	2	2	2	2	2	2	2
15	2	2	2	2	2	2	2
16	2	2	2	2	2	2	2
17	2	1	1	2	2	1	2
18	1	1	1	1	2	1	1
19	1	1	1	1	2	1	1
20	1	1	1	1	2	1	1
21	1	1	1	1	2	1	1
22	1	1	1	1	1	1	1
23	1	1	1	1	1	1	1

I-87 SOUTHBOUND INTERCHANGES 21B TO 21 (1,150 VEH/HR/LANE)

LANES REQUIRED TO BE OPEN BY HOUR AND TIME OF DAY

SPRING SEASON MARCH 1 THRU MAY 20

HR/DAY	MON	TUES	WEDS	THUR	FRI	SAT	SUN
0	1	1	1	1	1	1	1
1	1	1	1	1	1	1	1
2	1	1	1	1	1	1	1
3	1	1	1	1	1	1	1
4	1	1	1	1	1	1	1
5	1	1	1	1	1	1	1
6	1	1	1	1	1	1	1
7	1	1	1	1	1	1	1
8	1	1	1	1	1	1	1
9	1	1	1	1	2	2	1
10	2	1	1	1	2	2	2
11	2	1	1	1	2	2	2
12	2	1	1	1	2	2	2
13	2	1	1	2	2	2	2
14	2	1	1	2	2	2	2
15	2	2	2	2	2	2	2
16	2	2	2	2	2	2	2
17	2	2	2	2	2	2	2
18	1	1	1	2	2	1	2
19	1	1	1	1	1	1	2
20	1	1	1	1	1	1	1
21	1	1	1	1	1	1	1
22	1	1	1	1	1	1	1
23	1	1	1	1	1	1	1

SUMMER SEASON MAY 21 THRU SEPTEMBER 15

HR/DAY	MON	TUES	WEDS	THUR	FRI	SAT	SUN
0	1	1	1	1	1	1	1
1	1	1	1	1	1	1	1
2	1	1	1	1	1	1	1
3	1	1	1	1	1	1	1
4	1	1	1	1	1	1	1
5	1	1	1	1	1	1	1
6	1	1	1	1	1	1	1
7	1	1	1	1	1	1	1
8	2	1	1	1	1	2	1
9	2	2	1	2	2	2	2
10	2	2	2	2	2	2	2
11	2	2	2	2	2	2	2
12	2	2	2	2	2	2	2
13	2	2	2	2	2	2	2
14	2	2	2	2	2	2	2
15	2	2	2	2	2	2	2
16	2	2	2	2	2	2	2
17	2	2	2	2	2	2	2
18	2	1	2	2	2	2	2
19	2	1	1	1	2	1	2
20	2	1	1	1	1	1	2
21	1	1	1	1	1	1	2
22	1	1	1	1	1	1	1
23	1	1	1	1	1	1	1

LANES REQUIRED TO BE OPEN BY HOUR AND TIME OF DAY

FALL SEASON SEPTEMBER 16 THRU November 30

HR/DAY	MON	TUES	WEDS	THUR	FRI	SAT	SUN
0	1	1	1	1	1	1	1
1	1	1	1	1	1	1	1
2	1	1	1	1	1	1	1
3	1	1	1	1	1	1	1
4	1	1	1	1	1	1	1
5	1	1	1	1	1	1	1
6	1	1	1	1	1	1	1
7	1	1	1	1	1	1	1
8	1	1	1	1	1	1	1
9	2	1	1	2	2	2	2
10	2	1	2	2	2	2	2
11	2	1	2	2	2	2	2
12	2	2	2	2	2	2	2
13	2	2	2	2	2	2	2
14	2	2	2	2	2	2	2
15	2	2	2	2	2	2	2
16	2	2	2	2	2	2	2
17	2	2	2	2	2	2	2
18	2	2	1	1	2	1	2
19	1	1	1	1	2	1	2
20	1	1	1	1	1	1	2
21	1	1	1	1	1	1	1
22	1	1	1	1	1	1	1
23	1	1	1	1	1	1	1

WINTER SEAS. DECEMBER 1 THRU February 28

HR/DAY	MON	TUES	WEDS	THUR	FRI	SAT	SUN
0	1	1	1	1	1	1	1
1	1	1	1	1	1	1	1
2	1	1	1	1	1	1	1
3	1	1	1	1	1	1	1
4	1	1	1	1	1	1	1
5	1	1	1	1	1	1	1
6	1	1	1	1	1	1	1
7	1	1	1	1	1	1	1
8	1	1	1	1	1	1	1
9	1	1	1	1	1	2	1
10	2	1	2	1	2	2	2
11	2	2	2	2	2	2	2
12	2	2	2	2	2	2	2
13	2	2	2	2	2	2	2
14	2	2	2	2	2	2	2
15	2	2	2	2	2	2	2
16	2	2	2	2	2	2	2
17	2	2	2	2	2	1	2
18	2	1	1	1	2	1	2
19	1	1	1	1	1	1	2
20	1	1	1	1	1	1	1
21	1	1	1	1	1	1	1
22	1	1	1	1	1	1	1
23	1	1	1	1	1	1	1

NOTES:

1) THE NEW YORK STATE THRUWAY IS A LIMITED ACCESS, HIGH-SPEED, HIGH-VOLUME HIGHWAY. TRAFFIC SHALL BE MAINTAINED IN ACCORDANCE WITH THE *MANUAL ON UNIFORM TRAFFIC CONTROL DEVICES (MUTCD)*, THE *WORK ZONE TRAFFIC CONTROL PLANS*, AND THE *STANDARD SPECIFICATIONS* SECTION 619 AS AMENDED BY THE AUTHORITY.

2) LANE CLOSURES ON THE THRUWAY SHALL ONLY BE ALLOWED IN ACCORDANCE WITH THESE TRAFFIC MANAGEMENT TABLE(S), UNLESS INDICATED OTHERWISE IN THE CONTRACT PLANS OR PROPOSAL DOCUMENTS.

3) LANE CLOSURE CHARTS SHALL APPLY AS FOLLOWS:

- 1,150 VEH/HR/LANE: APPLIES TO ALL WORK REQUIRING LANE CLOSURE(S) EXCEPT AS PERMITTED BELOW.

- 1,300 VEH/HR/LANE: APPLIES TO NON-EVASIVE WORK WHERE WORKERS AND/OR EQUIPMENT ARE LOCATED 4 FT. OR MORE FROM TRAVEL (SPACE) LANE, OR AS APPROVED BY THE THRUWAY PROJECT ENGINEER. WORK SHOULD BE ABLE TO BE IMMEDIATELY STOPPED AND LANE CLOSURE(S) REMOVED IN THE EVENT QUEUES, GREATER THAN 1 MILE, DEVELOP.

NEW YORK STATE OF OPPORTUNITY. Thruway Authority

U.S. CUSTOMARY STANDARD SHEET

LANE CLOSURE CHARTS
1,150 VEHICLES PER HOUR
ALBANY DIVISION
(SHEET 4 OF 18)

APPROVED SEPTEMBER 1, 2018

/S/ PATRICK THOMPSON, P.E.
DIRECTOR DESIGN SUPPORT SERVICES BUREAU

ISSUED UNDER DB 18-003

TA 619-31

I-87 NORTHBOUND INTERCHANGES 21B TO 21A (1,150 VEH/HR/LANE)

LANES REQUIRED TO BE OPEN BY HOUR AND TIME OF DAY

SPRING SEASON MARCH 1 THRU MAY 20

HR/DAY	MON	TUES	WEDS	THUR	FRI	SAT	SUN
0	1	1	1	1	1	1	1
1	1	1	1	1	1	1	1
2	1	1	1	1	1	1	1
3	1	1	1	1	1	1	1
4	1	1	1	1	1	1	1
5	1	1	1	1	1	1	1
6	1	1	1	1	1	1	1
7	2	2	2	2	2	1	1
8	2	2	2	2	2	1	1
9	2	1	1	1	2	1	1
10	2	1	1	1	2	2	1
11	2	1	1	1	2	2	2
12	2	1	1	2	2	2	2
13	2	1	1	2	2	2	2
14	2	1	2	2	2	2	2
15	2	2	2	2	2	2	2
16	2	2	2	2	2	2	2
17	2	1	2	2	2	1	2
18	1	1	1	1	2	1	2
19	1	1	1	1	2	1	2
20	1	1	1	1	2	1	2
21	1	1	1	1	1	1	1
22	1	1	1	1	1	1	1
23	1	1	1	1	1	1	1

SUMMER SEASON MAY 21 THRU SEPTEMBER 15

HR/DAY	MON	TUES	WEDS	THUR	FRI	SAT	SUN
0	1	1	1	1	1	1	1
1	1	1	1	1	1	1	1
2	1	1	1	1	1	1	1
3	1	1	1	1	1	1	1
4	1	1	1	1	1	1	1
5	1	1	1	1	1	1	1
6	1	1	1	1	1	1	1
7	2	2	2	2	2	1	1
8	2	2	2	2	2	2	1
9	2	1	2	2	2	2	1
10	2	1	2	2	2	2	2
11	2	2	2	2	2	2	2
12	2	2	2	2	2	2	2
13	2	2	2	2	2	2	2
14	2	2	2	2	2	2	2
15	2	2	2	2	2	2	2
16	2	2	2	2	2	2	2
17	2	2	2	2	2	2	2
18	1	1	1	2	2	2	2
19	1	1	1	1	2	1	2
20	1	1	1	1	2	1	2
21	1	1	1	1	2	1	1
22	1	1	1	1	2	1	1
23	1	1	1	1	1	1	1

LANES REQUIRED TO BE OPEN BY HOUR AND TIME OF DAY

FALL SEASON SEPTEMBER 16 THRU November 30

HR/DAY	MON	TUES	WEDS	THUR	FRI	SAT	SUN
0	1	1	1	1	1	1	1
1	1	1	1	1	1	1	1
2	1	1	1	1	1	1	1
3	1	1	1	1	1	1	1
4	1	1	1	1	1	1	1
5	1	1	1	1	1	1	1
6	1	1	1	1	1	1	1
7	2	2	2	2	2	1	1
8	2	2	1	2	2	1	1
9	1	1	1	1	1	2	1
10	1	1	1	2	2	2	1
11	2	1	1	2	2	2	2
12	2	1	2	2	2	2	2
13	2	2	2	2	2	2	2
14	2	2	2	2	2	2	2
15	2	2	2	2	2	2	2
16	2	2	2	2	2	2	2
17	2	2	2	2	2	2	2
18	1	1	1	1	2	1	2
19	1	1	1	1	2	1	2
20	1	1	1	1	2	1	1
21	1	1	1	1	1	1	1
22	1	1	1	1	1	1	1
23	1	1	1	1	1	1	1

WINTER SEAS. DECEMBER 1 THRU February 28

HR/DAY	MON	TUES	WEDS	THUR	FRI	SAT	SUN
0	1	1	1	1	1	1	1
1	1	1	1	1	1	1	1
2	1	1	1	1	1	1	1
3	1	1	1	1	1	1	1
4	1	1	1	1	1	1	1
5	1	1	1	1	1	1	1
6	1	1	1	1	1	1	1
7	2	2	2	2	2	1	1
8	2	2	2	2	2	1	1
9	1	1	1	1	1	1	1
10	1	1	1	1	1	2	1
11	2	1	2	1	2	2	2
12	2	2	2	2	2	2	2
13	2	1	2	2	2	2	2
14	2	2	2	2	2	2	2
15	2	2	2	2	2	2	2
16	2	2	2	2	2	2	2
17	2	1	1	2	2	1	2
18	1	1	1	1	2	1	1
19	1	1	1	1	2	1	1
20	1	1	1	1	2	1	1
21	1	1	1	1	2	1	1
22	1	1	1	1	1	1	1
23	1	1	1	1	1	1	1

I-87 SOUTHBOUND INTERCHANGES 21A TO 21B (1,150 VEH/HR/LANE)

LANES REQUIRED TO BE OPEN BY HOUR AND TIME OF DAY

SPRING SEASON MARCH 1 THRU MAY 20

HR/DAY	MON	TUES	WEDS	THUR	FRI	SAT	SUN
0	1	1	1	1	1	1	1
1	1	1	1	1	1	1	1
2	1	1	1	1	1	1	1
3	1	1	1	1	1	1	1
4	1	1	1	1	1	1	1
5	1	1	1	1	1	1	1
6	1	1	1	1	1	1	1
7	1	1	1	1	1	1	1
8	1	1	1	1	1	1	1
9	1	1	1	1	2	2	1
10	2	1	1	1	2	2	2
11	2	1	1	1	2	2	2
12	2	1	1	2	2	2	2
13	2	1	1	2	2	2	2
14	2	2	2	2	2	2	2
15	2	2	2	2	2	2	2
16	2	2	2	2	2	2	2
17	2	2	2	2	2	2	2
18	1	1	1	2	2	1	2
19	1	1	1	1	1	1	2
20	1	1	1	1	1	1	1
21	1	1	1	1	1	1	1
22	1	1	1	1	1	1	1
23	1	1	1	1	1	1	1

SUMMER SEASON MAY 21 THRU SEPTEMBER 15

HR/DAY	MON	TUES	WEDS	THUR	FRI	SAT	SUN
0	1	1	1	1	1	1	1
1	1	1	1	1	1	1	1
2	1	1	1	1	1	1	1
3	1	1	1	1	1	1	1
4	1	1	1	1	1	1	1
5	1	1	1	1	1	1	1
6	1	1	1	1	1	1	1
7	2	1	1	1	1	1	1
8	2	1	1	2	2	2	2
9	2	2	2	2	2	2	2
10	2	2	2	2	2	2	2
11	2	2	2	2	2	2	2
12	2	2	2	2	2	2	2
13	2	2	2	2	2	2	2
14	2	2	2	2	2	2	2
15	2	2	2	2	2	2	2
16	2	2	2	2	2	2	2
17	2	2	2	2	2	2	2
18	2	2	2	2	2	2	2
19	2	1	1	1	2	1	2
20	1	1	1	1	1	1	2
21	1	1	1	1	1	1	2
22	1	1	1	1	1	1	1
23	1	1	1	1	1	1	1

LANES REQUIRED TO BE OPEN BY HOUR AND TIME OF DAY

FALL SEASON SEPTEMBER 16 THRU November 30

HR/DAY	MON	TUES	WEDS	THUR	FRI	SAT	SUN
0	1	1	1	1	1	1	1
1	1	1	1	1	1	1	1
2	1	1	1	1	1	1	1
3	1	1	1	1	1	1	1
4	1	1	1	1	1	1	1
5	1	1	1	1	1	1	1
6	1	1	1	1	1	1	1
7	1	1	1	1	1	1	1
8	1	1	1	1	1	1	1
9	2	1	1	2	2	2	2
10	2	1	2	2	2	2	2
11	2	2	2	2	2	2	2
12	2	2	2	2	2	2	2
13	2	2	2	2	2	2	2
14	2	2	2	2	2	2	2
15	2	2	2	2	2	2	2
16	2	2	2	2	2	2	2
17	2	2	2	2	2	2	2
18	2	2	2	1	2	1	2
19	1	2	1	1	1	1	2
20	1	1	1	1	1	1	1
21	1	1	1	1	1	1	1
22	1	1	1	1	1	1	1
23	1	1	1	1	1	1	1

WINTER SEAS. DECEMBER 1 THRU February 28

HR/DAY	MON	TUES	WEDS	THUR	FRI	SAT	SUN
0	1	1	1	1	1	1	1
1	1	1	1	1	1	1	1
2	1	1	1	1	1	1	1
3	1	1	1	1	1	1	1
4	1	1	1	1	1	1	1
5	1	1	1	1	1	1	1
6	1	1	1	1	1	1	1
7	1	1	1	1	1	1	1
8	1	1	1	1	1	1	1
9	1	1	1	1	1	2	1
10	2	1	2	1	2	2	2
11	2	2	2	2	2	2	2
12	2	2	2	2	2	2	2
13	2	2	2	2	2	2	2
14	2	2	2	2	2	2	2
15	2	2	2	2	2	2	2
16	2	2	2	2	2	2	2
17	2	2	2	2	2	1	2
18	2	1	1	1	2	1	2
19	1	1	1	1	1	1	2
20	1	1	1	1	1	1	1
21	1	1	1	1	1	1	1
22	1	1	1	1	1	1	1
23	1	1	1	1	1	1	1

NOTES:

1) THE NEW YORK STATE THRUWAY IS A LIMITED ACCESS, HIGH-SPEED, HIGH-VOLUME HIGHWAY. TRAFFIC SHALL BE MAINTAINED IN ACCORDANCE WITH THE *MANUAL ON UNIFORM TRAFFIC CONTROL DEVICES (MUTCD)*, THE *WORK ZONE TRAFFIC CONTROL PLANS*, AND THE *STANDARD SPECIFICATIONS* SECTION 619 AS AMENDED BY THE AUTHORITY.

2) LANE CLOSURES ON THE THRUWAY SHALL ONLY BE ALLOWED IN ACCORDANCE WITH THESE TRAFFIC MANAGEMENT TABLE(S), UNLESS INDICATED OTHERWISE IN THE CONTRACT PLANS OR PROPOSAL DOCUMENTS.

3) LANE CLOSURE CHARTS SHALL APPLY AS FOLLOWS:

- 1,150 VEH/HR/LANE: APPLIES TO ALL WORK REQUIRING LANE CLOSURE(S) EXCEPT AS PERMITTED BELOW.

- 1,300 VEH/HR/LANE: APPLIES TO NON-EVASIVE WORK WHERE WORKERS AND/OR EQUIPMENT ARE LOCATED 4 FT. OR MORE FROM TRAVEL (SPACE) LANE, OR AS APPROVED BY THE THRUWAY PROJECT ENGINEER. WORK SHOULD BE ABLE TO BE IMMEDIATELY STOPPED AND LANE CLOSURE(S) REMOVED IN THE EVENT QUEUES, GREATER THAN 1 MILE, DEVELOP.

NEW YORK STATE OF OPPORTUNITY. Thruway Authority

U.S. CUSTOMARY STANDARD SHEET

LANE CLOSURE CHARTS
1,150 VEHICLES PER HOUR
ALBANY DIVISION
(SHEET 5 OF 18)

APPROVED SEPTEMBER 1, 2018

/S/ PATRICK THOMPSON, P.E.
DIRECTOR DESIGN SUPPORT SERVICES BUREAU

ISSUED UNDER DB 18-003

TA 619-31

I-87 NORTHBOUND INTERCHANGES 21A TO 22 (1,150 VEH/HR/LANE)

LANES REQUIRED TO BE OPEN BY HOUR AND TIME OF DAY

SPRING SEASON MARCH 1 THRU MAY 20

HR/DAY	MON	TUES	WEDS	THUR	FRI	SAT	SUN
0	1	1	1	1	1	1	1
1	1	1	1	1	1	1	1
2	1	1	1	1	1	1	1
3	1	1	1	1	1	1	1
4	1	1	1	1	1	1	1
5	1	1	1	1	1	1	1
6	1	1	1	1	1	1	1
7	2	2	2	2	2	1	1
8	2	2	2	2	2	2	1
9	2	2	2	2	2	2	1
10	2	2	2	2	2	2	2
11	2	2	2	2	2	2	2
12	2	2	2	2	2	2	2
13	2	2	2	2	2	2	2
14	2	2	2	2	2	2	2
15	2	2	2	2	2	2	2
16	2	2	2	2	2	2	2
17	2	2	2	2	2	2	2
18	2	1	1	2	2	2	2
19	1	1	1	1	2	1	2
20	1	1	1	1	2	1	2
21	1	1	1	1	2	1	2
22	1	1	1	1	1	1	1
23	1	1	1	1	1	1	1

SUMMER SEASON MAY 21 THRU SEPTEMBER 15

HR/DAY	MON	TUES	WEDS	THUR	FRI	SAT	SUN
0	1	1	1	1	1	1	1
1	1	1	1	1	1	1	1
2	1	1	1	1	1	1	1
3	1	1	1	1	1	1	1
4	1	1	1	1	1	1	1
5	1	1	1	1	1	1	1
6	1	1	1	1	1	1	1
7	2	2	2	2	2	1	1
8	2	2	2	2	2	2	1
9	2	2	2	2	2	2	2
10	2	2	2	2	2	2	2
11	2	2	2	2	2	2	2
12	2	2	2	2	2	2	2
13	2	2	2	2	2	2	2
14	2	2	2	2	2	2	2
15	2	2	2	2	2	2	2
16	2	2	2	2	2	2	2
17	2	2	2	2	2	2	2
18	2	2	2	2	2	2	2
19	2	1	2	2	2	2	2
20	1	1	1	2	2	2	2
21	1	1	1	2	2	1	2
22	1	1	1	1	2	1	1
23	1	1	1	1	1	1	1

LANES REQUIRED TO BE OPEN BY HOUR AND TIME OF DAY

FALL SEASON SEPTEMBER 16 THRU November 30

HR/DAY	MON	TUES	WEDS	THUR	FRI	SAT	SUN
0	1	1	1	1	1	1	1
1	1	1	1	1	1	1	1
2	1	1	1	1	1	1	1
3	1	1	1	1	1	1	1
4	1	1	1	1	1	1	1
5	1	1	1	1	1	1	1
6	1	1	1	1	1	1	1
7	2	2	2	2	2	1	1
8	2	2	2	2	2	2	1
9	2	2	2	2	2	2	1
10	2	2	2	2	2	2	2
11	2	2	2	2	2	2	2
12	2	2	2	2	2	2	2
13	2	2	2	2	2	2	2
14	2	2	2	2	2	2	2
15	2	2	2	2	2	2	2
16	2	2	2	2	2	2	2
17	2	2	2	2	2	2	2
18	2	2	2	2	2	2	2
19	1	1	2	1	2	2	2
20	1	1	1	1	2	1	2
21	1	1	1	1	2	1	1
22	1	1	1	1	2	1	1
23	1	1	1	1	1	1	1

WINTER SEAS. DECEMBER 1 THRU February 28

HR/DAY	MON	TUES	WEDS	THUR	FRI	SAT	SUN
0	1	1	1	1	1	1	1
1	1	1	1	1	1	1	1
2	1	1	1	1	1	1	1
3	1	1	1	1	1	1	1
4	1	1	1	1	1	1	1
5	1	1	1	1	1	1	1
6	1	1	1	1	1	1	1
7	2	2	2	2	2	1	1
8	2	2	2	2	2	1	1
9	2	2	2	2	2	2	1
10	2	2	2	2	2	2	2
11	2	2	2	2	2	2	2
12	2	2	2	2	2	2	2
13	2	2	2	2	2	2	2
14	2	2	2	2	2	2	2
15	2	2	2	2	2	2	2
16	2	2	2	2	2	2	2
17	2	2	2	2	2	2	2
18	2	1	2	2	2	1	2
19	1	1	1	1	2	1	2
20	1	1	1	1	2	1	1
21	1	1	1	1	2	1	1
22	1	1	1	1	2	1	1
23	1	1	1	1	1	1	1

I-87 SOUTHBOUND INTERCHANGES 22 TO 21A (1,150 VEH/HR/LANE)

LANES REQUIRED TO BE OPEN BY HOUR AND TIME OF DAY

SPRING SEASON MARCH 1 THRU MAY 20

HR/DAY	MON	TUES	WEDS	THUR	FRI	SAT	SUN
0	1	1	1	1	1	1	1
1	1	1	1	1	1	1	1
2	1	1	1	1	1	1	1
3	1	1	1	1	1	1	1
4	1	1	1	1	1	1	1
5	1	1	1	1	1	1	1
6	1	1	1	1	1	1	1
7	1	1	1	1	1	1	1
8	2	1	1	2	2	2	1
9	2	1	1	2	2	2	2
10	2	1	1	2	2	2	2
11	2	1	2	2	2	2	2
12	2	2	2	2	2	2	2
13	2	2	2	2	2	2	2
14	2	2	2	2	2	2	2
15	2	2	2	2	2	2	2
16	2	2	2	2	2	2	2
17	2	2	2	2	2	2	2
18	2	1	1	2	2	1	2
19	1	1	1	1	2	1	2
20	1	1	1	1	1	1	2
21	1	1	1	1	1	1	1
22	1	1	1	1	1	1	1
23	1	1	1	1	1	1	1

SUMMER SEASON MAY 21 THRU SEPTEMBER 15

HR/DAY	MON	TUES	WEDS	THUR	FRI	SAT	SUN
0	1	1	1	1	1	1	1
1	1	1	1	1	1	1	1
2	1	1	1	1	1	1	1
3	1	1	1	1	1	1	1
4	1	1	1	1	1	1	1
5	1	1	1	1	1	1	1
6	1	1	1	1	1	1	1
7	2	2	2	2	1	1	1
8	2	2	2	2	2	2	2
9	2	2	2	2	2	2	2
10	2	2	2	2	2	2	2
11	2	2	2	2	2	2	2
12	2	2	2	2	2	2	2
13	2	2	2	2	2	2	2
14	2	2	2	2	2	2	2
15	2	2	2	2	2	2	2
16	2	2	2	2	2	2	2
17	2	2	2	2	2	2	2
18	2	2	2	2	2	2	2
19	2	1	1	2	2	2	2
20	2	1	1	1	2	1	2
21	1	1	1	1	1	1	2
22	1	1	1	1	1	1	1
23	1	1	1	1	1	1	1

LANES REQUIRED TO BE OPEN BY HOUR AND TIME OF DAY

FALL SEASON SEPTEMBER 16 THRU November 30

HR/DAY	MON	TUES	WEDS	THUR	FRI	SAT	SUN
0	1	1	1	1	1	1	1
1	1	1	1	1	1	1	1
2	1	1	1	1	1	1	1
3	1	1	1	1	1	1	1
4	1	1	1	1	1	1	1
5	1	1	1	1	1	1	1
6	1	1	1	1	1	1	1
7	1	1	1	1	1	1	1
8	2	2	2	2	2	2	1
9	2	2	2	2	2	2	2
10	2	2	2	2	2	2	2
11	2	2	2	2	2	2	2
12	2	2	2	2	2	2	2
13	2	2	2	2	2	2	2
14	2	2	2	2	2	2	2
15	2	2	2	2	2	2	2
16	2	2	2	2	2	2	2
17	2	2	2	2	2	2	2
18	2	2	2	2	2	2	2
19	1	2	1	1	2	1	2
20	1	1	1	1	1	1	2
21	1	1	1	1	1	1	1
22	1	1	1	1	1	1	1
23	1	1	1	1	1	1	1

WINTER SEAS. DECEMBER 1 THRU February 28

HR/DAY	MON	TUES	WEDS	THUR	FRI	SAT	SUN
0	1	1	1	1	1	1	1
1	1	1	1	1	1	1	1
2	1	1	1	1	1	1	1
3	1	1	1	1	1	1	1
4	1	1	1	1	1	1	1
5	1	1	1	1	1	1	1
6	1	1	1	1	1	1	1
7	1	1	1	1	1	1	1
8	1	2	2	2	1	1	1
9	2	1	2	2	2	2	1
10	2	2	2	2	2	2	2
11	2	2	2	2	2	2	2
12	2	2	2	2	2	2	2
13	2	2	2	2	2	2	2
14	2	2	2	2	2	2	2
15	2	2	2	2	2	2	2
16	2	2	2	2	2	2	2
17	2	2	2	2	2	2	2
18	2	2	2	2	2	1	2
19	1	1	1	1	2	1	2
20	1	1	1	1	1	1	1
21	1	1	1	1	1	1	1
22	1	1	1	1	1	1	1
23	1	1	1	1	1	1	1

NOTES:

1) THE NEW YORK STATE THRUWAY IS A LIMITED ACCESS, HIGH-SPEED, HIGH-VOLUME HIGHWAY. TRAFFIC SHALL BE MAINTAINED IN ACCORDANCE WITH THE *MANUAL ON UNIFORM TRAFFIC CONTROL DEVICES (MUTCD)*, THE *WORK ZONE TRAFFIC CONTROL PLANS*, AND THE *STANDARD SPECIFICATIONS* SECTION 619 AS AMENDED BY THE AUTHORITY.

2) LANE CLOSURES ON THE THRUWAY SHALL ONLY BE ALLOWED IN ACCORDANCE WITH THESE TRAFFIC MANAGEMENT TABLE(S), UNLESS INDICATED OTHERWISE IN THE CONTRACT PLANS OR PROPOSAL DOCUMENTS.

3) LANE CLOSURE CHARTS SHALL APPLY AS FOLLOWS:

- 1,150 VEH/HR/LANE: APPLIES TO ALL WORK REQUIRING LANE CLOSURE(S) EXCEPT AS PERMITTED BELOW.

- 1,300 VEH/HR/LANE: APPLIES TO NON-EVASIVE WORK WHERE WORKERS AND/OR EQUIPMENT ARE LOCATED 4 FT. OR MORE FROM TRAVEL (SPACE) LANE, OR AS APPROVED BY THE THRUWAY PROJECT ENGINEER. WORK SHOULD BE ABLE TO BE IMMEDIATELY STOPPED AND LANE CLOSURE(S) REMOVED IN THE EVENT QUEUES, GREATER THAN 1 MILE, DEVELOP.

NEW YORK STATE OF OPPORTUNITY. Thruway Authority

U.S. CUSTOMARY STANDARD SHEET

LANE CLOSURE CHARTS
1,150 VEHICLES PER HOUR
ALBANY DIVISION
(SHEET 6 OF 18)

APPROVED SEPTEMBER 1, 2018

/S/ PATRICK THOMPSON, P.E.
DIRECTOR DESIGN SUPPORT SERVICES BUREAU

ISSUED UNDER DB 18-003

TA 619-31

I-87 NORTHBOUND INTERCHANGES 22 TO 23 (1,150 VEH/HR/LANE)

LANES REQUIRED TO BE OPEN BY HOUR AND TIME OF DAY

SPRING SEASON MARCH 1 THRU MAY 20

HR/DAY	MON	TUES	WEDS	THUR	FRI	SAT	SUN
0	1	1	1	1	1	1	1
1	1	1	1	1	1	1	1
2	1	1	1	1	1	1	1
3	1	1	1	1	1	1	1
4	1	1	1	1	1	1	1
5	1	1	1	1	1	1	1
6	1	1	1	1	1	1	1
7	2	2	2	2	2	1	1
8	2	2	2	2	2	1	1
9	2	2	2	2	2	2	1
10	2	2	2	2	2	2	2
11	2	2	2	2	2	2	2
12	2	2	2	2	2	2	2
13	2	2	2	2	2	2	2
14	2	2	2	2	2	2	2
15	2	2	2	2	2	2	2
16	2	2	2	2	2	2	2
17	2	2	2	2	2	2	2
18	2	1	1	2	2	2	2
19	1	1	1	1	2	1	2
20	1	1	1	1	2	1	2
21	1	1	1	1	2	1	1
22	1	1	1	1	1	1	1
23	1	1	1	1	1	1	1

SUMMER SEASON MAY 21 THRU SEPTEMBER 15

HR/DAY	MON	TUES	WEDS	THUR	FRI	SAT	SUN
0	1	1	1	1	1	1	1
1	1	1	1	1	1	1	1
2	1	1	1	1	1	1	1
3	1	1	1	1	1	1	1
4	1	1	1	1	1	1	1
5	1	1	1	1	1	1	1
6	1	1	1	1	1	1	1
7	2	2	2	2	2	1	1
8	2	2	2	2	2	2	1
9	2	2	2	2	2	2	1
10	2	2	2	2	2	2	2
11	2	2	2	2	2	2	2
12	2	2	2	2	2	2	2
13	2	2	2	2	2	2	2
14	2	2	2	2	2	2	2
15	2	2	2	2	2	2	2
16	2	2	2	2	2	2	2
17	2	2	2	2	2	2	2
18	2	1	1	2	2	2	2
19	1	1	1	1	2	1	2
20	1	1	1	1	2	1	2
21	1	1	1	1	2	1	1
22	1	1	1	1	2	1	1
23	1	1	1	1	1	1	1

LANES REQUIRED TO BE OPEN BY HOUR AND TIME OF DAY

FALL SEASON SEPTEMBER 16 THRU November 30

HR/DAY	MON	TUES	WEDS	THUR	FRI	SAT	SUN
0	1	1	1	1	1	1	1
1	1	1	1	1	1	1	1
2	1	1	1	1	1	1	1
3	1	1	1	1	1	1	1
4	1	1	1	1	1	1	1
5	1	1	1	1	1	1	1
6	1	1	1	1	1	1	1
7	2	2	2	2	2	1	1
8	2	2	2	2	2	2	1
9	2	2	2	2	2	2	1
10	2	2	2	2	2	2	2
11	2	2	2	2	2	2	2
12	2	2	2	2	2	2	2
13	2	2	2	2	2	2	2
14	2	2	2	2	2	2	2
15	2	2	2	2	2	2	2
16	2	2	2	2	2	2	2
17	2	2	2	2	2	2	2
18	2	2	2	2	2	2	2
19	1	1	2	1	2	2	2
20	1	1	1	1	2	1	2
21	1	1	1	1	2	1	2
22	1	1	1	1	2	1	1
23	1	1	1	1	1	1	1

WINTER SEAS. DECEMBER 1 THRU February 28

HR/DAY	MON	TUES	WEDS	THUR	FRI	SAT	SUN
0	1	1	1	1	1	1	1
1	1	1	1	1	1	1	1
2	1	1	1	1	1	1	1
3	1	1	1	1	1	1	1
4	1	1	1	1	1	1	1
5	1	1	1	1	1	1	1
6	1	1	1	1	1	1	1
7	2	2	2	2	2	1	1
8	2	2	2	2	2	1	1
9	1	1	1	1	1	1	1
10	1	1	1	1	1	2	1
11	1	1	1	1	2	2	2
12	2	1	1	1	2	2	2
13	2	1	1	2	2	2	2
14	2	1	2	2	2	2	2
15	2	2	2	2	2	2	2
16	2	2	2	2	2	1	2
17	1	1	1	2	2	1	2
18	1	1	1	2	2	1	2
19	1	1	1	1	2	1	1
20	1	1	1	1	2	1	1
21	1	1	1	1	2	1	1
22	1	1	1	1	1	1	1
23	1	1	1	1	1	1	1

I-87 SOUTHBOUND INTERCHANGES 23 TO 22 (1,150 VEH/HR/LANE)

LANES REQUIRED TO BE OPEN BY HOUR AND TIME OF DAY

SPRING SEASON MARCH 1 THRU MAY 20

HR/DAY	MON	TUES	WEDS	THUR	FRI	SAT	SUN
0	1	1	1	1	1	1	1
1	1	1	1	1	1	1	1
2	1	1	1	1	1	1	1
3	1	1	1	1	1	1	1
4	1	1	1	1	1	1	1
5	1	1	1	1	1	1	1
6	1	1	1	1	1	1	1
7	1	1	1	1	1	1	1
8	2	1	2	2	2	2	1
9	2	1	2	2	2	2	1
10	2	1	2	2	2	2	2
11	2	2	2	2	2	2	2
12	2	2	2	2	2	2	2
13	2	2	2	2	2	2	2
14	2	2	2	2	2	2	2
15	2	2	2	2	2	2	2
16	2	2	2	2	2	2	2
17	2	2	2	2	2	2	2
18	2	1	2	2	2	1	2
19	1	1	1	2	2	1	2
20	1	1	1	1	1	1	2
21	1	1	1	1	1	1	1
22	1	1	1	1	1	1	1
23	1	1	1	1	1	1	1

SUMMER SEASON MAY 21 THRU SEPTEMBER 15

HR/DAY	MON	TUES	WEDS	THUR	FRI	SAT	SUN
0	1	1	1	1	1	1	1
1	1	1	1	1	1	1	1
2	1	1	1	1	1	1	1
3	1	1	1	1	1	1	1
4	1	1	1	1	1	1	1
5	1	1	1	1	1	1	1
6	1	1	1	1	1	1	1
7	2	2	2	2	2	2	1
8	2	2	2	2	2	2	2
9	2	2	2	2	2	2	2
10	2	2	2	2	2	2	2
11	2	2	2	2	2	2	2
12	2	2	2	2	2	2	2
13	2	2	2	2	2	2	2
14	2	2	2	2	2	2	2
15	2	2	2	2	2	2	2
16	2	2	2	2	2	2	2
17	2	2	2	2	2	2	2
18	2	2	2	2	2	2	2
19	2	1	1	2	2	2	2
20	2	1	1	1	2	1	2
21	1	1	1	1	1	1	2
22	1	1	1	1	1	1	1
23	1	1	1	1	1	1	1

LANES REQUIRED TO BE OPEN BY HOUR AND TIME OF DAY

FALL SEASON SEPTEMBER 16 THRU November 30

HR/DAY	MON	TUES	WEDS	THUR	FRI	SAT	SUN
0	1	1	1	1	1	1	1
1	1	1	1	1	1	1	1
2	1	1	1	1	1	1	1
3	1	1	1	1	1	1	1
4	1	1	1	1	1	1	1
5	1	1	1	1	1	1	1
6	1	1	1	1	1	1	1
7	1	2	1	1	2	1	1
8	2	2	2	2	2	2	1
9	2	2	2	2	2	2	2
10	2	2	2	2	2	2	2
11	2	2	2	2	2	2	2
12	2	2	2	2	2	2	2
13	2	2	2	2	2	2	2
14	2	2	2	2	2	2	2
15	2	2	2	2	2	2	2
16	2	2	2	2	2	2	2
17	2	2	2	2	2	2	2
18	2	2	2	2	2	2	2
19	2	2	1	1	2	1	2
20	1	1	1	1	1	1	2
21	1	1	1	1	1	1	1
22	1	1	1	1	1	1	1
23	1	1	1	1	1	1	1

WINTER SEAS. DECEMBER 1 THRU February 28

HR/DAY	MON	TUES	WEDS	THUR	FRI	SAT	SUN
0	1	1	1	1	1	1	1
1	1	1	1	1	1	1	1
2	1	1	1	1	1	1	1
3	1	1	1	1	1	1	1
4	1	1	1	1	1	1	1
5	1	1	1	1	1	1	1
6	1	1	1	1	1	1	1
7	1	1	1	1	1	1	1
8	1	2	2	2	2	1	1
9	2	2	2	2	2	2	1
10	2	2	2	2	2	2	2
11	2	2	2	2	2	2	2
12	2	2	2	2	2	2	2
13	2	2	2	2	2	2	2
14	2	2	2	2	2	2	2
15	2	2	2	2	2	2	2
16	2	2	2	2	2	2	2
17	2	2	2	2	2	2	2
18	2	2	2	2	2	1	2
19	1	1	1	1	2	1	2
20	1	1	1	1	1	1	1
21	1	1	1	1	1	1	1
22	1	1	1	1	1	1	1
23	1	1	1	1	1	1	1

NOTES:

1) THE NEW YORK STATE THRUWAY IS A LIMITED ACCESS, HIGH-SPEED, HIGH-VOLUME HIGHWAY. TRAFFIC SHALL BE MAINTAINED IN ACCORDANCE WITH THE *MANUAL ON UNIFORM TRAFFIC CONTROL DEVICES (MUTCD)*, THE *WORK ZONE TRAFFIC CONTROL PLANS*, AND THE *STANDARD SPECIFICATIONS* SECTION 619 AS AMENDED BY THE AUTHORITY.

2) LANE CLOSURES ON THE THRUWAY SHALL ONLY BE ALLOWED IN ACCORDANCE WITH THESE TRAFFIC MANAGEMENT TABLE(S), UNLESS INDICATED OTHERWISE IN THE CONTRACT PLANS OR PROPOSAL DOCUMENTS.

3) LANE CLOSURE CHARTS SHALL APPLY AS FOLLOWS:

- 1,150 VEH/HR/LANE: APPLIES TO ALL WORK REQUIRING LANE CLOSURE(S) EXCEPT AS PERMITTED BELOW.

- 1,300 VEH/HR/LANE: APPLIES TO NON-EVASIVE WORK WHERE WORKERS AND/OR EQUIPMENT ARE LOCATED 4 FT. OR MORE FROM TRAVEL (SPACE) LANE, OR AS APPROVED BY THE THRUWAY PROJECT ENGINEER. WORK SHOULD BE ABLE TO BE IMMEDIATELY STOPPED AND LANE CLOSURE(S) REMOVED IN THE EVENT QUEUES, GREATER THAN 1 MILE, DEVELOP.

NEW YORK STATE OF OPPORTUNITY. Thruway Authority

U.S. CUSTOMARY STANDARD SHEET

LANE CLOSURE CHARTS
1,150 VEHICLES PER HOUR
ALBANY DIVISION
(SHEET 7 OF 18)

APPROVED SEPTEMBER 1, 2018

/S/ PATRICK THOMPSON, P.E.
DIRECTOR DESIGN SUPPORT SERVICES BUREAU

ISSUED UNDER DB 18-003

TA 619-31

I-87 NORTHBOUND INTERCHANGES 23 TO 24 (1,150 VEH/HR/LANE)

LANES REQUIRED TO BE OPEN BY HOUR AND TIME OF DAY

SPRING SEASON MARCH 1 THRU MAY 20

HR/DAY	MON	TUES	WEDS	THUR	FRI	SAT	SUN
0	1	1	1	1	1	1	1
1	1	1	1	1	1	1	1
2	1	1	1	1	1	1	1
3	1	1	1	1	1	1	1
4	1	1	1	1	1	1	1
5	1	1	1	1	1	1	1
6	1	1	1	1	1	1	1
7	2	2	2	2	2	1	1
8	2	2	2	2	2	2	1
9	2	2	2	2	2	2	1
10	2	2	2	2	2	2	2
11	2	2	2	2	2	2	2
12	2	2	2	2	2	2	2
13	2	2	2	2	2	2	2
14	2	2	2	2	3	2	2
15	2	2	3	3	3	2	2
16	3	3	3	3	3	2	2
17	3	3	3	3	3	2	2
18	2	2	2	2	3	2	2
19	1	1	2	1	2	1	2
20	1	1	1	1	2	1	2
21	1	1	1	1	2	1	1
22	1	1	1	1	2	1	1
23	1	1	1	1	1	1	1

SUMMER SEASON MAY 21 THRU SEPTEMBER 15

HR/DAY	MON	TUES	WEDS	THUR	FRI	SAT	SUN
0	1	1	1	1	1	1	1
1	1	1	1	1	1	1	1
2	1	1	1	1	1	1	1
3	1	1	1	1	1	1	1
4	1	1	1	1	1	1	1
5	1	1	1	1	1	1	1
6	1	1	1	1	1	1	1
7	2	2	2	2	1	1	1
8	2	2	2	2	1	2	1
9	2	2	2	2	1	2	2
10	2	2	2	2	1	3	2
11	2	2	2	2	3	3	2
12	2	2	2	2	3	3	3
13	2	2	2	2	3	3	2
14	2	2	2	2	3	3	2
15	3	3	3	3	3	3	2
16	3	3	3	3	3	2	2
17	3	3	3	3	3	2	2
18	2	2	2	2	3	2	2
19	2	1	2	2	2	2	2
20	1	1	1	2	2	1	2
21	1	1	1	1	2	1	1
22	1	1	1	1	2	1	1
23	1	1	1	1	2	1	1

LANES REQUIRED TO BE OPEN BY HOUR AND TIME OF DAY

FALL SEASON SEPTEMBER 16 THRU November 30

HR/DAY	MON	TUES	WEDS	THUR	FRI	SAT	SUN
0	1	1	1	1	1	1	1
1	1	1	1	1	1	1	1
2	1	1	1	1	1	1	1
3	1	1	1	1	1	1	1
4	1	1	1	1	1	1	1
5	1	1	1	1	1	1	1
6	1	1	1	1	1	1	1
7	2	2	2	2	2	1	1
8	2	2	2	2	2	2	1
9	2	2	2	2	2	2	1
10	2	2	2	2	2	2	2
11	2	2	2	2	2	2	2
12	2	2	2	2	2	2	2
13	2	2	2	2	2	2	2
14	2	2	2	2	3	2	2
15	2	2	3	3	3	2	2
16	3	3	3	3	3	2	2
17	3	3	3	3	3	2	2
18	2	2	2	2	3	2	2
19	1	1	2	1	2	1	2
20	1	1	1	1	2	1	2
21	1	1	1	1	2	1	1
22	1	1	1	1	2	1	1
23	1	1	1	1	1	1	1

WINTER SEAS. DECEMBER 1 THRU February 28

HR/DAY	MON	TUES	WEDS	THUR	FRI	SAT	SUN
0	1	1	1	1	1	1	1
1	1	1	1	1	1	1	1
2	1	1	1	1	1	1	1
3	1	1	1	1	1	1	1
4	1	1	1	1	1	1	1
5	1	1	1	1	1	1	1
6	1	1	1	1	1	1	1
7	2	2	2	2	2	1	1
8	2	2	2	2	2	1	1
9	2	2	2	2	2	2	1
10	2	2	2	2	2	2	1
11	2	2	2	2	2	2	2
12	2	2	2	2	2	2	2
13	2	2	2	2	2	2	2
14	2	2	2	2	2	2	2
15	2	2	2	2	3	2	2
16	3	3	3	3	3	2	2
17	3	3	3	3	3	2	2
18	2	2	2	2	2	1	2
19	1	1	1	1	2	1	1
20	1	1	1	1	2	1	1
21	1	1	1	1	2	1	1
22	1	1	1	1	1	1	1
23	1	1	1	1	1	1	1

I-87 SOUTHBOUND INTERCHANGES 24 TO 23 (1,150 VEH/HR/LANE)

LANES REQUIRED TO BE OPEN BY HOUR AND TIME OF DAY

SPRING SEASON MARCH 1 THRU MAY 20

HR/DAY	MON	TUES	WEDS	THUR	FRI	SAT	SUN
0	1	1	1	1	1	1	1
1	1	1	1	1	1	1	1
2	1	1	1	1	1	1	1
3	1	1	1	1	1	1	1
4	1	1	1	1	1	1	1
5	1	1	1	1	1	1	1
6	2	2	2	2	2	1	1
7	2	2	2	2	2	1	1
8	2	2	2	2	2	1	1
9	2	2	2	2	2	2	1
10	2	2	2	2	2	2	2
11	2	2	2	2	2	2	2
12	2	2	2	2	2	2	2
13	2	2	2	2	2	2	2
14	2	2	2	2	2	2	2
15	2	2	2	2	2	2	3
16	2	2	2	2	3	2	3
17	2	2	2	2	2	2	2
18	2	2	2	2	2	2	2
19	1	1	1	1	2	1	2
20	1	1	1	1	1	1	2
21	1	1	1	1	1	1	1
22	1	1	1	1	1	1	1
23	1	1	1	1	1	1	1

SUMMER SEASON MAY 21 THRU SEPTEMBER 15

HR/DAY	MON	TUES	WEDS	THUR	FRI	SAT	SUN
0	1	1	1	1	1	1	1
1	1	1	1	1	1	1	1
2	1	1	1	1	1	1	1
3	1	1	1	1	1	1	1
4	1	1	1	1	1	1	1
5	1	1	1	1	1	1	1
6	2	2	2	2	2	1	1
7	3	2	3	2	2	1	1
8	3	2	2	2	2	2	1
9	2	2	2	2	2	2	2
10	2	2	2	2	2	2	2
11	2	2	2	2	2	3	3
12	2	2	2	2	2	2	3
13	2	2	2	2	2	2	3
14	2	2	2	2	2	2	3
15	2	2	2	2	3	2	3
16	2	2	2	2	3	2	3
17	2	2	2	2	3	2	3
18	2	2	2	2	2	2	3
19	2	1	2	2	2	2	3
20	2	1	1	2	2	1	2
21	1	1	1	1	1	1	2
22	1	1	1	1	1	1	1
23	1	1	1	1	1	1	1

LANES REQUIRED TO BE OPEN BY HOUR AND TIME OF DAY

FALL SEASON SEPTEMBER 16 THRU November 30

HR/DAY	MON	TUES	WEDS	THUR	FRI	SAT	SUN
0	1	1	1	1	1	1	1
1	1	1	1	1	1	1	1
2	1	1	1	1	1	1	1
3	1	1	1	1	1	1	1
4	1	1	1	1	1	1	1
5	1	1	1	1	1	1	1
6	2	2	2	2	2	1	1
7	3	2	2	3	2	1	1
8	3	2	2	2	2	1	1
9	2	2	2	2	2	2	2
10	2	2	2	2	2	2	2
11	2	2	2	2	2	2	2
12	2	2	2	2	2	2	3
13	2	2	2	2	2	2	3
14	2	2	2	2	2	2	3
15	2	2	2	2	2	2	3
16	2	2	2	2	3	2	3
17	2	2	2	2	3	2	3
18	2	2	2	2	2	2	2
19	1	2	1	2	2	1	2
20	1	1	1	1	1	1	2
21	1	1	1	1	1	1	1
22	1	1	1	1	1	1	1
23	1	1	1	1	1	1	1

WINTER SEAS. DECEMBER 1 THRU February 28

HR/DAY	MON	TUES	WEDS	THUR	FRI	SAT	SUN
0	1	1	1	1	1	1	1
1	1	1	1	1	1	1	1
2	1	1	1	1	1	1	1
3	1	1	1	1	1	1	1
4	1	1	1	1	1	1	1
5	1	1	1	1	1	1	1
6	2	2	2	2	2	1	1
7	3	3	2	2	2	1	1
8	3	3	2	2	2	1	1
9	2	2	2	2	2	1	1
10	2	2	2	2	2	2	2
11	2	2	2	2	2	2	2
12	2	2	2	2	2	2	2
13	2	2	2	2	2	2	2
14	2	2	2	2	2	2	2
15	2	2	2	2	2	2	2
16	2	2	2	2	2	2	2
17	2	2	2	2	2	2	2
18	2	2	2	2	2	1	2
19	1	1	1	1	1	1	2
20	1	1	1	1	1	1	1
21	1	1	1	1	1	1	1
22	1	1	1	1	1	1	1
23	1	1	1	1	1	1	1

NOTES:

1) THE NEW YORK STATE THRUWAY IS A LIMITED ACCESS, HIGH-SPEED, HIGH-VOLUME HIGHWAY. TRAFFIC SHALL BE MAINTAINED IN ACCORDANCE WITH THE *MANUAL ON UNIFORM TRAFFIC CONTROL DEVICES (MUTCD)*, THE *WORK ZONE TRAFFIC CONTROL PLANS*, AND THE *STANDARD SPECIFICATIONS* SECTION 619 AS AMENDED BY THE AUTHORITY.

2) LANE CLOSURES ON THE THRUWAY SHALL ONLY BE ALLOWED IN ACCORDANCE WITH THESE TRAFFIC MANAGEMENT TABLE(S), UNLESS INDICATED OTHERWISE IN THE CONTRACT PLANS OR PROPOSAL DOCUMENTS.

3) LANE CLOSURE CHARTS SHALL APPLY AS FOLLOWS:

- 1,150 VEH/HR/LANE: APPLIES TO ALL WORK REQUIRING LANE CLOSURE(S) EXCEPT AS PERMITTED BELOW.

- 1,300 VEH/HR/LANE: APPLIES TO NON-EVASIVE WORK WHERE WORKERS AND/OR EQUIPMENT ARE LOCATED 4 FT. OR MORE FROM TRAVEL (SPACE) LANE, OR AS APPROVED BY THE THRUWAY PROJECT ENGINEER. WORK SHOULD BE ABLE TO BE IMMEDIATELY STOPPED AND LANE CLOSURE(S) REMOVED IN THE EVENT QUEUES, GREATER THAN 1 MILE, DEVELOP.

NEW YORK STATE OF OPPORTUNITY. Thruway Authority

U.S. CUSTOMARY STANDARD SHEET

LANE CLOSURE CHARTS
1,150 VEHICLES PER HOUR
ALBANY DIVISION
(SHEET 8 OF 18)

APPROVED SEPTEMBER 1, 2018

/S/ PATRICK THOMPSON, P.E.
DIRECTOR DESIGN SUPPORT SERVICES BUREAU

ISSUED UNDER DB 18-003

TA 619-31

I-90 WESTBOUND INTERCHANGES 24 TO 25 (1,150 VEH/HR/LANE)

LANES REQUIRED TO BE OPEN BY HOUR AND TIME OF DAY

SPRING SEASON MARCH 1 THRU MAY 20

HR/DAY	MON	TUES	WEDS	THUR	FRI	SAT	SUN
0	1	1	1	1	1	1	1
1	1	1	1	1	1	1	1
2	1	1	1	1	1	1	1
3	1	1	1	1	1	1	1
4	1	1	1	1	1	1	1
5	1	1	1	1	1	1	1
6	2	2	2	2	2	1	1
7	2	3	2	3	2	1	1
8	2	2	2	2	2	2	1
9	2	2	2	2	2	2	2
10	2	2	2	2	2	2	2
11	2	2	2	2	2	2	2
12	2	2	2	2	3	2	2
13	2	2	2	2	3	2	2
14	3	3	3	3	3	2	3
15	3	3	3	3	3	2	3
16	3	3	3	3	3	2	3
17	3	3	3	3	3	2	2
18	3	2	3	3	3	2	2
19	2	2	2	2	2	2	2
20	2	2	2	2	2	2	2
21	1	1	1	2	2	2	1
22	1	1	1	1	2	1	1
23	1	1	1	1	1	1	1

SUMMER SEASON MAY 21 THRU SEPTEMBER 15

HR/DAY	MON	TUES	WEDS	THUR	FRI	SAT	SUN
0	1	1	1	1	1	1	1
1	1	1	1	1	1	1	1
2	1	1	1	1	1	1	1
3	1	1	1	1	1	1	1
4	1	1	1	1	1	1	1
5	1	1	1	1	1	1	1
6	2	2	2	2	2	1	1
7	3	2	3	3	2	2	1
8	3	2	3	3	3	2	1
9	2	2	2	2	2	2	2
10	2	2	2	2	3	3	2
11	2	2	2	2	3	3	2
12	3	2	2	3	3	3	3
13	3	2	3	3	3	3	3
14	3	3	3	3	3	3	3
15	3	3	3	3	3	3	3
16	3	3	3	3	3	2	3
17	3	3	3	3	3	2	2
18	3	3	3	3	3	2	2
19	2	2	2	2	3	2	2
20	2	2	2	2	2	2	2
21	1	2	2	2	2	2	1
22	1	1	2	2	2	1	1
23	1	1	1	1	1	1	1

LANES REQUIRED TO BE OPEN BY HOUR AND TIME OF DAY

FALL SEASON SEPTEMBER 16 THRU November 30

HR/DAY	MON	TUES	WEDS	THUR	FRI	SAT	SUN
0	1	1	1	1	1	1	1
1	1	1	1	1	1	1	1
2	1	1	1	1	1	1	1
3	1	1	1	1	1	1	1
4	1	1	1	1	1	1	1
5	1	1	1	1	1	1	1
6	2	2	2	2	2	1	1
7	3	3	2	3	3	1	1
8	2	2	2	2	2	2	1
9	2	2	2	2	2	2	2
10	2	2	2	2	2	2	2
11	2	2	2	2	3	2	2
12	2	2	3	2	3	3	3
13	3	3	3	2	3	2	3
14	3	3	3	3	3	2	3
15	3	3	3	3	3	2	3
16	3	3	3	3	3	2	3
17	3	3	3	3	3	2	3
18	3	3	3	3	3	2	2
19	2	2	2	2	2	2	2
20	2	2	2	2	2	2	2
21	1	2	2	2	2	1	1
22	1	1	1	1	2	1	1
23	1	1	1	1	1	1	1

WINTER SEAS. DECEMBER 1 THRU February 28

HR/DAY	MON	TUES	WEDS	THUR	FRI	SAT	SUN
0	1	1	1	1	1	1	1
1	1	1	1	1	1	1	1
2	1	1	1	1	1	1	1
3	1	1	1	1	1	1	1
4	1	1	1	1	1	1	1
5	1	1	1	1	1	1	1
6	2	2	2	2	2	1	1
7	2	3	3	3	2	1	1
8	2	2	2	2	2	2	1
9	2	2	2	2	2	2	1
10	2	2	2	2	2	2	2
11	2	2	2	2	2	2	2
12	2	2	2	2	3	2	2
13	2	2	2	2	3	2	2
14	3	3	3	3	3	2	2
15	3	3	3	3	3	2	2
16	3	3	3	3	3	2	2
17	3	3	3	3	3	2	2
18	3	3	3	3	3	2	2
19	2	2	2	2	2	2	2
20	2	2	2	2	2	2	1
21	1	1	1	2	2	2	1
22	1	1	1	1	2	1	1
23	1	1	1	1	1	1	1

I-90 EASTBOUND INTERCHANGES 25 TO 24 (1,150 VEH/HR/LANE)

LANES REQUIRED TO BE OPEN BY HOUR AND TIME OF DAY

SPRING SEASON MARCH 1 THRU MAY 20

HR/DAY	MON	TUES	WEDS	THUR	FRI	SAT	SUN
0	1	1	1	1	1	1	1
1	1	1	1	1	1	1	1
2	1	1	1	1	1	1	1
3	1	1	1	1	1	1	1
4	1	1	1	1	1	1	1
5	1	1	1	1	1	1	1
6	3	3	3	3	3	1	1
7	3	3	3	3	3	2	1
8	3	3	3	3	3	2	1
9	3	3	3	3	3	2	2
10	2	2	2	2	3	2	2
11	2	2	2	2	3	3	2
12	2	2	2	2	3	3	3
13	2	2	2	2	3	2	3
14	3	2	2	3	3	2	3
15	3	3	3	3	3	2	3
16	3	3	3	3	3	2	3
17	3	3	3	3	3	2	3
18	2	2	2	2	3	2	3
19	2	2	2	2	2	2	2
20	1	1	1	2	2	1	2
21	1	1	1	1	1	1	2
22	1	1	1	1	1	1	1
23	1	1	1	1	1	1	1

SUMMER SEASON MAY 21 THRU SEPTEMBER 15

HR/DAY	MON	TUES	WEDS	THUR	FRI	SAT	SUN
0	1	1	1	1	1	1	1
1	1	1	1	1	1	1	1
2	1	1	1	1	1	1	1
3	1	1	1	1	1	1	1
4	1	1	1	1	1	1	1
5	2	2	2	2	1	1	1
6	3	3	3	3	3	1	1
7	3	3	3	3	3	2	1
8	3	3	3	3	3	2	2
9	3	3	3	3	3	2	2
10	3	2	2	3	3	3	3
11	3	2	2	3	3	3	3
12	3	2	2	3	3	3	3
13	3	2	2	3	3	3	3
14	3	3	3	3	3	3	3
15	3	3	3	3	3	2	3
16	3	3	3	3	3	2	3
17	3	3	3	3	3	2	3
18	2	2	2	2	3	2	3
19	2	2	2	2	2	2	2
20	2	2	2	2	2	2	2
21	1	1	1	1	2	2	2
22	1	1	1	1	1	1	1
23	1	1	1	1	1	1	1

LANES REQUIRED TO BE OPEN BY HOUR AND TIME OF DAY

FALL SEASON SEPTEMBER 16 THRU November 30

HR/DAY	MON	TUES	WEDS	THUR	FRI	SAT	SUN
0	1	1	1	1	1	1	1
1	1	1	1	1	1	1	1
2	1	1	1	1	1	1	1
3	1	1	1	1	1	1	1
4	1	1	1	1	1	1	1
5	2	2	2	2	2	1	1
6	3	3	3	3	3	1	1
7	3	3	3	3	3	2	1
8	3	3	3	3	3	2	2
9	3	3	3	3	3	2	2
10	3	3	3	3	3	3	3
11	3	2	3	2	3	3	3
12	3	3	3	3	3	3	3
13	3	3	3	3	3	3	3
14	3	3	3	3	3	3	3
15	3	3	3	3	3	3	3
16	3	3	3	3	3	3	3
17	3	3	3	3	3	3	3
18	2	2	2	2	3	2	3
19	2	2	2	2	2	2	2
20	1	2	2	2	2	2	2
21	1	1	1	1	2	1	1
22	1	1	1	1	1	1	1
23	1	1	1	1	1	1	1

WINTER SEAS. DECEMBER 1 THRU February 28

HR/DAY	MON	TUES	WEDS	THUR	FRI	SAT	SUN
0	1	1	1	1	1	1	1
1	1	1	1	1	1	1	1
2	1	1	1	1	1	1	1
3	1	1	1	1	1	1	1
4	1	1	1	1	1	1	1
5	1	1	1	1	1	1	1
6	3	3	3	3	3	1	1
7	3	3	3	3	3	2	1
8	3	3	3	3	3	2	1
9	3	3	3	3	3	2	2
10	2	2	2	2	3	2	2
11	3	2	2	2	3	3	2
12	3	2	3	2	3	3	3
13	3	2	3	2	3	3	3
14	3	2	3	3	3	3	3
15	3	3	3	3	3	3	3
16	3	3	3	3	3	2	3
17	3	3	3	3	3	2	2
18	2	2	2	2	3	2	2
19	2	2	2	2	2	2	2
20	1	1	1	1	2	1	1
21	1	1	1	1	1	1	1
22	1	1	1	1	1	1	1
23	1	1	1	1	1	1	1

NOTES:

1) THE NEW YORK STATE THRUWAY IS A LIMITED ACCESS, HIGH-SPEED, HIGH-VOLUME HIGHWAY. TRAFFIC SHALL BE MAINTAINED IN ACCORDANCE WITH THE *MANUAL ON UNIFORM TRAFFIC CONTROL DEVICES (MUTCD)*, THE *WORK ZONE TRAFFIC CONTROL PLANS*, AND THE *STANDARD SPECIFICATIONS* SECTION 619 AS AMENDED BY THE AUTHORITY.

2) LANE CLOSURES ON THE THRUWAY SHALL ONLY BE ALLOWED IN ACCORDANCE WITH THESE TRAFFIC MANAGEMENT TABLE(S), UNLESS INDICATED OTHERWISE IN THE CONTRACT PLANS OR PROPOSAL DOCUMENTS.

3) LANE CLOSURE CHARTS SHALL APPLY AS FOLLOWS:

- 1,150 VEH/HR/LANE: APPLIES TO ALL WORK REQUIRING LANE CLOSURE(S) EXCEPT AS PERMITTED BELOW.

- 1,300 VEH/HR/LANE: APPLIES TO NON-EVASIVE WORK WHERE WORKERS AND/OR EQUIPMENT ARE LOCATED 4 FT. OR MORE FROM TRAVEL (SPACE) LANE, OR AS APPROVED BY THE THRUWAY PROJECT ENGINEER. WORK SHOULD BE ABLE TO BE IMMEDIATELY STOPPED AND LANE CLOSURE(S) REMOVED IN THE EVENT QUEUES, GREATER THAN 1 MILE, DEVELOP.

NEW YORK STATE OF OPPORTUNITY. Thruway Authority

U.S. CUSTOMARY STANDARD SHEET

LANE CLOSURE CHARTS
1,150 VEHICLES PER HOUR
ALBANY DIVISION
(SHEET 9 OF 18)

APPROVED SEPTEMBER 1, 2018

/S/ PATRICK THOMPSON, P.E.
DIRECTOR DESIGN SUPPORT SERVICES BUREAU

ISSUED UNDER DB 18-003

TA 619-31

I-90 WESTBOUND INTERCHANGES 25 TO 25A (1,150 VEH/HR/LANE)

LANES REQUIRED TO BE OPEN BY HOUR AND TIME OF DAY

SPRING SEASON MARCH 1 THRU MAY 20

HR/DAY	MON	TUES	WEDS	THUR	FRI	SAT	SUN
0	1	1	1	1	1	1	1
1	1	1	1	1	1	1	1
2	1	1	1	1	1	1	1
3	1	1	1	1	1	1	1
4	1	1	1	1	1	1	1
5	1	1	1	1	1	1	1
6	1	1	1	1	1	1	1
7	1	1	1	1	1	1	1
8	1	1	1	1	1	1	1
9	2	1	1	1	2	2	1
10	2	1	1	1	2	2	1
11	2	2	1	2	2	2	2
12	2	2	2	2	2	2	2
13	2	2	2	2	2	2	2
14	2	2	2	2	2	2	2
15	2	2	2	2	3	2	2
16	3	3	3	3	3	2	2
17	2	2	2	3	3	1	2
18	2	2	2	2	2	1	2
19	1	1	1	1	2	1	1
20	1	1	1	1	1	1	1
21	1	1	1	1	1	1	1
22	1	1	1	1	1	1	1
23	1	1	1	1	1	1	1

SUMMER SEASON MAY 21 THRU SEPTEMBER 15

HR/DAY	MON	TUES	WEDS	THUR	FRI	SAT	SUN
0	1	1	1	1	1	1	1
1	1	1	1	1	1	1	1
2	1	1	1	1	1	1	1
3	1	1	1	1	1	1	1
4	1	1	1	1	1	1	1
5	1	1	1	1	1	1	1
6	1	1	1	1	1	1	1
7	2	1	1	1	1	1	1
8	2	2	2	2	2	2	1
9	2	2	2	2	2	2	2
10	2	2	2	2	2	2	2
11	2	2	2	2	2	2	2
12	2	2	2	2	2	2	2
13	2	2	2	2	3	2	2
14	2	2	2	2	3	2	2
15	3	2	3	3	3	2	2
16	3	3	3	3	3	2	2
17	3	3	3	3	3	2	2
18	2	2	2	2	3	2	2
19	1	1	1	2	2	1	2
20	1	1	1	2	2	1	1
21	1	1	1	1	2	1	1
22	1	1	1	1	1	1	1
23	1	1	1	1	1	1	1

LANES REQUIRED TO BE OPEN BY HOUR AND TIME OF DAY

FALL SEASON SEPTEMBER 16 THRU November 30

HR/DAY	MON	TUES	WEDS	THUR	FRI	SAT	SUN
0	1	1	1	1	1	1	1
1	1	1	1	1	1	1	1
2	1	1	1	1	1	1	1
3	1	1	1	1	1	1	1
4	1	1	1	1	1	1	1
5	1	1	1	1	1	1	1
6	1	1	1	1	1	1	1
7	1	1	1	1	1	1	1
8	1	1	1	1	2	1	1
9	2	1	2	2	2	2	1
10	2	2	2	2	2	2	2
11	2	2	2	2	2	2	2
12	2	2	2	2	2	2	2
13	2	2	2	2	2	2	2
14	2	2	2	2	3	2	2
15	2	2	3	3	3	2	2
16	3	3	3	3	3	2	2
17	3	3	3	3	3	2	2
18	2	2	2	2	2	1	2
19	1	2	1	1	2	1	2
20	1	1	1	1	2	1	1
21	1	1	1	1	1	1	1
22	1	1	1	1	1	1	1
23	1	1	1	1	1	1	1

WINTER SEAS. DECEMBER 1 THRU February 28

HR/DAY	MON	TUES	WEDS	THUR	FRI	SAT	SUN
0	1	1	1	1	1	1	1
1	1	1	1	1	1	1	1
2	1	1	1	1	1	1	1
3	1	1	1	1	1	1	1
4	1	1	1	1	1	1	1
5	1	1	1	1	1	1	1
6	1	1	1	1	1	1	1
7	1	1	1	1	1	1	1
8	1	1	1	1	1	1	1
9	1	1	1	1	1	1	1
10	1	1	2	1	2	2	1
11	2	2	2	2	2	2	2
12	2	2	2	2	2	2	2
13	2	2	2	2	2	2	2
14	2	2	2	2	2	2	2
15	2	2	2	2	3	2	2
16	3	3	3	3	3	2	2
17	2	3	3	3	3	1	2
18	2	2	2	2	2	1	1
19	1	1	1	1	2	1	1
20	1	1	1	1	1	1	1
21	1	1	1	1	1	1	1
22	1	1	1	1	1	1	1
23	1	1	1	1	1	1	1

I-90 EASTBOUND INTERCHANGES 25A TO 25 (1,150 VEH/HR/LANE)

LANES REQUIRED TO BE OPEN BY HOUR AND TIME OF DAY

SPRING SEASON MARCH 1 THRU MAY 20

HR/DAY	MON	TUES	WEDS	THUR	FRI	SAT	SUN
0	1	1	1	1	1	1	1
1	1	1	1	1	1	1	1
2	1	1	1	1	1	1	1
3	1	1	1	1	1	1	1
4	1	1	1	1	1	1	1
5	1	1	1	1	1	1	1
6	2	2	2	2	2	1	1
7	3	3	3	3	3	1	1
8	2	2	2	2	2	1	1
9	2	2	2	2	2	2	1
10	2	2	2	2	2	2	2
11	2	2	2	2	2	2	2
12	2	2	2	2	2	2	2
13	2	2	2	2	2	2	2
14	2	2	2	2	2	2	2
15	2	2	2	2	2	2	2
16	2	2	2	2	2	2	2
17	2	2	2	2	2	2	2
18	1	1	1	2	2	1	2
19	1	1	1	1	2	1	2
20	1	1	1	1	1	1	2
21	1	1	1	1	1	1	1
22	1	1	1	1	1	1	1
23	1	1	1	1	1	1	1

SUMMER SEASON MAY 21 THRU SEPTEMBER 15

HR/DAY	MON	TUES	WEDS	THUR	FRI	SAT	SUN
0	1	1	1	1	1	1	1
1	1	1	1	1	1	1	1
2	1	1	1	1	1	1	1
3	1	1	1	1	1	1	1
4	1	1	1	1	1	1	1
5	1	1	1	1	1	1	1
6	2	2	2	2	2	1	1
7	3	3	3	3	3	1	1
8	3	2	2	2	2	1	1
9	2	2	2	2	2	2	2
10	2	2	2	2	2	2	2
11	2	2	2	2	2	2	2
12	2	2	2	2	2	2	3
13	2	2	2	2	2	2	3
14	2	2	2	2	2	2	3
15	2	2	2	2	2	2	3
16	2	2	2	2	2	2	3
17	2	2	2	2	2	2	3
18	2	2	2	2	2	2	2
19	2	1	1	1	2	1	2
20	1	1	1	1	1	1	2
21	1	1	1	1	1	1	1
22	1	1	1	1	1	1	1
23	1	1	1	1	1	1	1

LANES REQUIRED TO BE OPEN BY HOUR AND TIME OF DAY

FALL SEASON SEPTEMBER 16 THRU November 30

HR/DAY	MON	TUES	WEDS	THUR	FRI	SAT	SUN
0	1	1	1	1	1	1	1
1	1	1	1	1	1	1	1
2	1	1	1	1	1	1	1
3	1	1	1	1	1	1	1
4	1	1	1	1	1	1	1
5	1	1	1	1	1	1	1
6	2	2	2	2	2	1	1
7	3	3	3	3	3	1	1
8	2	2	2	3	2	1	1
9	2	2	2	2	2	2	1
10	2	2	2	2	2	2	2
11	2	2	2	2	2	2	2
12	2	2	2	2	2	2	2
13	2	2	2	2	2	2	3
14	2	2	2	2	2	2	3
15	2	2	2	2	2	2	3
16	2	2	2	2	2	2	3
17	2	2	2	2	2	2	2
18	2	2	2	2	2	2	2
19	1	1	1	1	2	1	2
20	1	1	1	1	1	1	2
21	1	1	1	1	1	1	1
22	1	1	1	1	1	1	1
23	1	1	1	1	1	1	1

WINTER SEAS. DECEMBER 1 THRU February 28

HR/DAY	MON	TUES	WEDS	THUR	FRI	SAT	SUN
0	1	1	1	1	1	1	1
1	1	1	1	1	1	1	1
2	1	1	1	1	1	1	1
3	1	1	1	1	1	1	1
4	1	1	1	1	1	1	1
5	1	1	1	1	1	1	1
6	2	2	2	2	2	1	1
7	3	3	3	3	3	1	1
8	2	2	2	2	2	1	1
9	2	2	2	2	2	1	1
10	2	2	2	2	2	2	1
11	2	2	2	2	2	2	2
12	2	2	2	2	2	2	2
13	2	2	2	2	2	2	2
14	2	2	2	2	2	2	2
15	2	2	2	2	2	2	2
16	2	2	2	2	2	2	2
17	2	2	2	2	2	1	2
18	1	1	1	1	2	1	2
19	1	1	1	1	1	1	1
20	1	1	1	1	1	1	1
21	1	1	1	1	1	1	1
22	1	1	1	1	1	1	1
23	1	1	1	1	1	1	1

NOTES:

1) THE NEW YORK STATE THRUWAY IS A LIMITED ACCESS, HIGH-SPEED, HIGH-VOLUME HIGHWAY. TRAFFIC SHALL BE MAINTAINED IN ACCORDANCE WITH THE *MANUAL ON UNIFORM TRAFFIC CONTROL DEVICES (MUTCD)*, THE *WORK ZONE TRAFFIC CONTROL PLANS*, AND THE *STANDARD SPECIFICATIONS* SECTION 619 AS AMENDED BY THE AUTHORITY.

2) LANE CLOSURES ON THE THRUWAY SHALL ONLY BE ALLOWED IN ACCORDANCE WITH THESE TRAFFIC MANAGEMENT TABLE(S), UNLESS INDICATED OTHERWISE IN THE CONTRACT PLANS OR PROPOSAL DOCUMENTS.

3) LANE CLOSURE CHARTS SHALL APPLY AS FOLLOWS:

- 1,150 VEH/HR/LANE: APPLIES TO ALL WORK REQUIRING LANE CLOSURE(S) EXCEPT AS PERMITTED BELOW.

- 1,300 VEH/HR/LANE: APPLIES TO NON-EVASIVE WORK WHERE WORKERS AND/OR EQUIPMENT ARE LOCATED 4 FT. OR MORE FROM TRAVEL (SPACE) LANE, OR AS APPROVED BY THE THRUWAY PROJECT ENGINEER. WORK SHOULD BE ABLE TO BE IMMEDIATELY STOPPED AND LANE CLOSURE(S) REMOVED IN THE EVENT QUEUES, GREATER THAN 1 MILE, DEVELOP.

NEW YORK STATE OF OPPORTUNITY. Thruway Authority

U.S. CUSTOMARY STANDARD SHEET

LANE CLOSURE CHARTS
1,150 VEHICLES PER HOUR
ALBANY DIVISION
(SHEET 10 OF 18)

APPROVED SEPTEMBER 1, 2018

/S/ PATRICK THOMPSON, P.E.
DIRECTOR DESIGN SUPPORT SERVICES BUREAU

ISSUED UNDER DB 18-003

TA 619-31

I-90 WESTBOUND INTERCHANGES 25A TO 26 (1,150 VEH/HR/LANE)

LANES REQUIRED TO BE OPEN BY HOUR AND TIME OF DAY

SPRING SEASON MARCH 1 THRU MAY 20

HR/DAY	MON	TUES	WEDS	THUR	FRI	SAT	SUN
0	1	1	1	1	1	1	1
1	1	1	1	1	1	1	1
2	1	1	1	1	1	1	1
3	1	1	1	1	1	1	1
4	1	1	1	1	1	1	1
5	1	1	1	1	1	1	1
6	1	1	1	1	1	1	1
7	1	1	1	1	1	1	1
8	1	1	1	1	1	1	1
9	1	1	1	1	1	1	1
10	1	1	1	1	1	2	1
11	2	1	1	1	2	1	1
12	1	1	1	2	2	1	1
13	2	1	1	2	2	1	2
14	2	1	1	2	2	1	2
15	2	2	2	2	2	1	2
16	2	2	2	2	2	1	2
17	2	2	2	2	2	1	1
18	1	1	1	1	2	1	1
19	1	1	1	1	1	1	1
20	1	1	1	1	1	1	1
21	1	1	1	1	1	1	1
22	1	1	1	1	1	1	1
23	1	1	1	1	1	1	1

SUMMER SEASON MAY 21 THRU SEPTEMBER 15

HR/DAY	MON	TUES	WEDS	THUR	FRI	SAT	SUN
0	1	1	1	1	1	1	1
1	1	1	1	1	1	1	1
2	1	1	1	1	1	1	1
3	1	1	1	1	1	1	1
4	1	1	1	1	1	1	1
5	1	1	1	1	1	1	1
6	1	1	1	1	1	1	1
7	1	1	1	1	1	1	1
8	1	1	1	1	1	1	1
9	1	1	1	1	1	2	1
10	1	1	1	2	2	2	2
11	2	1	1	2	2	2	2
12	2	1	2	2	2	2	2
13	2	1	2	2	2	2	2
14	2	2	2	2	2	2	2
15	2	2	2	2	2	2	2
16	2	2	2	2	2	1	2
17	2	2	2	2	2	1	2
18	1	1	1	2	2	1	1
19	1	1	1	1	2	1	1
20	1	1	1	1	1	1	1
21	1	1	1	1	1	1	1
22	1	1	1	1	1	1	1
23	1	1	1	1	1	1	1

LANES REQUIRED TO BE OPEN BY HOUR AND TIME OF DAY

FALL SEASON SEPTEMBER 16 THRU November 30

HR/DAY	MON	TUES	WEDS	THUR	FRI	SAT	SUN
0	1	1	1	1	1	1	1
1	1	1	1	1	1	1	1
2	1	1	1	1	1	1	1
3	1	1	1	1	1	1	1
4	1	1	1	1	1	1	1
5	1	1	1	1	1	1	1
6	1	1	1	1	1	1	1
7	1	1	1	1	1	1	1
8	1	1	1	1	1	1	1
9	1	1	1	1	1	1	1
10	1	1	1	1	1	2	1
11	1	1	1	2	2	2	2
12	2	1	1	1	2	2	2
13	2	1	2	1	2	1	2
14	2	2	2	2	2	1	2
15	2	2	2	2	2	1	2
16	2	2	2	2	2	1	2
17	2	2	2	2	2	1	2
18	1	1	2	1	2	1	1
19	1	1	1	1	1	1	1
20	1	1	1	1	1	1	1
21	1	1	1	1	1	1	1
22	1	1	1	1	1	1	1
23	1	1	1	1	1	1	1

WINTER SEAS. DECEMBER 1 THRU February 28

HR/DAY	MON	TUES	WEDS	THUR	FRI	SAT	SUN
0	1	1	1	1	1	1	1
1	1	1	1	1	1	1	1
2	1	1	1	1	1	1	1
3	1	1	1	1	1	1	1
4	1	1	1	1	1	1	1
5	1	1	1	1	1	1	1
6	1	1	1	1	1	1	1
7	1	1	1	1	1	1	1
8	1	1	1	1	1	1	1
9	1	1	1	1	1	1	1
10	1	1	1	1	1	1	1
11	1	1	2	1	2	2	1
12	1	1	2	1	2	2	2
13	1	1	2	1	2	1	1
14	1	1	2	1	2	1	1
15	2	2	2	2	2	1	1
16	2	2	2	2	2	1	1
17	2	2	2	2	2	1	1
18	1	1	1	1	1	1	1
19	1	1	1	1	1	1	1
20	1	1	1	1	1	1	1
21	1	1	1	1	1	1	1
22	1	1	1	1	1	1	1
23	1	1	1	1	1	1	1

I-90 EASTBOUND INTERCHANGES 26 TO 25A (1,150 VEH/HR/LANE)

LANES REQUIRED TO BE OPEN BY HOUR AND TIME OF DAY

SPRING SEASON MARCH 1 THRU MAY 20

HR/DAY	MON	TUES	WEDS	THUR	FRI	SAT	SUN
0	1	1	1	1	1	1	1
1	1	1	1	1	1	1	1
2	1	1	1	1	1	1	1
3	1	1	1	1	1	1	1
4	1	1	1	1	1	1	1
5	1	1	1	1	1	1	1
6	1	1	1	1	1	1	1
7	2	2	2	2	2	1	1
8	2	1	1	1	1	1	1
9	1	1	1	1	1	1	1
10	1	1	1	1	1	1	1
11	1	1	1	1	1	1	1
12	1	1	1	1	1	1	1
13	1	1	1	1	1	1	1
14	1	1	1	1	2	1	2
15	1	1	1	1	2	1	2
16	1	1	1	1	2	1	2
17	1	1	1	1	2	1	2
18	1	1	1	1	1	1	2
19	1	1	1	1	1	1	1
20	1	1	1	1	1	1	1
21	1	1	1	1	1	1	1
22	1	1	1	1	1	1	1
23	1	1	1	1	1	1	1

SUMMER SEASON MAY 21 THRU SEPTEMBER 15

HR/DAY	MON	TUES	WEDS	THUR	FRI	SAT	SUN
0	1	1	1	1	1	1	1
1	1	1	1	1	1	1	1
2	1	1	1	1	1	1	1
3	1	1	1	1	1	1	1
4	1	1	1	1	1	1	1
5	1	1	1	1	1	1	1
6	2	1	1	1	1	1	1
7	2	2	2	2	2	1	1
8	2	1	1	2	1	1	1
9	1	1	1	1	1	1	1
10	1	1	1	1	2	1	1
11	2	1	1	1	2	2	2
12	2	1	1	1	2	2	2
13	2	1	1	1	2	2	2
14	2	1	1	2	2	2	2
15	2	1	1	2	2	1	2
16	2	1	1	2	2	1	2
17	2	1	1	2	2	1	2
18	2	1	1	1	1	1	2
19	1	1	1	1	1	1	2
20	1	1	1	1	1	1	2
21	1	1	1	1	1	1	1
22	1	1	1	1	1	1	1
23	1	1	1	1	1	1	1

LANES REQUIRED TO BE OPEN BY HOUR AND TIME OF DAY

FALL SEASON SEPTEMBER 16 THRU November 30

HR/DAY	MON	TUES	WEDS	THUR	FRI	SAT	SUN
0	1	1	1	1	1	1	1
1	1	1	1	1	1	1	1
2	1	1	1	1	1	1	1
3	1	1	1	1	1	1	1
4	1	1	1	1	1	1	1
5	1	1	1	1	1	1	1
6	1	1	1	1	1	1	1
7	2	2	2	2	2	1	1
8	2	1	1	2	1	1	1
9	1	1	1	1	1	1	1
10	1	1	1	1	1	1	1
11	1	1	1	1	1	1	2
12	2	1	1	1	2	2	2
13	2	1	1	1	2	2	2
14	2	1	1	1	2	2	2
15	2	2	2	2	2	1	2
16	2	2	2	2	2	1	2
17	1	1	1	2	2	1	2
18	1	1	1	1	1	1	2
19	1	1	1	1	1	1	1
20	1	1	1	1	1	1	1
21	1	1	1	1	1	1	1
22	1	1	1	1	1	1	1
23	1	1	1	1	1	1	1

WINTER SEAS. DECEMBER 1 THRU February 28

HR/DAY	MON	TUES	WEDS	THUR	FRI	SAT	SUN
0	1	1	1	1	1	1	1
1	1	1	1	1	1	1	1
2	1	1	1	1	1	1	1
3	1	1	1	1	1	1	1
4	1	1	1	1	1	1	1
5	1	1	1	1	1	1	1
6	1	1	1	1	1	1	1
7	2	2	2	2	2	1	1
8	2	2	2	1	1	1	1
9	1	1	1	1	1	1	1
10	1	1	1	1	1	1	1
11	1	1	1	1	1	1	1
12	1	1	1	1	1	1	2
13	1	1	1	1	1	1	2
14	1	1	1	1	1	1	2
15	1	1	2	1	2	1	2
16	1	1	1	1	2	1	1
17	1	1	1	1	1	1	1
18	1	1	1	1	1	1	1
19	1	1	1	1	1	1	1
20	1	1	1	1	1	1	1
21	1	1	1	1	1	1	1
22	1	1	1	1	1	1	1
23	1	1	1	1	1	1	1

NOTES:

1) THE NEW YORK STATE THRUWAY IS A LIMITED ACCESS, HIGH-SPEED, HIGH-VOLUME HIGHWAY. TRAFFIC SHALL BE MAINTAINED IN ACCORDANCE WITH THE *MANUAL ON UNIFORM TRAFFIC CONTROL DEVICES (MUTCD)*, THE *WORK ZONE TRAFFIC CONTROL PLANS*, AND THE *STANDARD SPECIFICATIONS* SECTION 619 AS AMENDED BY THE AUTHORITY.

2) LANE CLOSURES ON THE THRUWAY SHALL ONLY BE ALLOWED IN ACCORDANCE WITH THESE TRAFFIC MANAGEMENT TABLE(S), UNLESS INDICATED OTHERWISE IN THE CONTRACT PLANS OR PROPOSAL DOCUMENTS.

3) LANE CLOSURE CHARTS SHALL APPLY AS FOLLOWS:

- 1,150 VEH/HR/LANE: APPLIES TO ALL WORK REQUIRING LANE CLOSURE(S) EXCEPT AS PERMITTED BELOW.

- 1,300 VEH/HR/LANE: APPLIES TO NON-EVASIVE WORK WHERE WORKERS AND/OR EQUIPMENT ARE LOCATED 4 FT. OR MORE FROM TRAVEL (SPACE) LANE, OR AS APPROVED BY THE THRUWAY PROJECT ENGINEER. WORK SHOULD BE ABLE TO BE IMMEDIATELY STOPPED AND LANE CLOSURE(S) REMOVED IN THE EVENT QUEUES, GREATER THAN 1 MILE, DEVELOP.

NEW YORK STATE OF OPPORTUNITY. Thruway Authority

U.S. CUSTOMARY STANDARD SHEET

LANE CLOSURE CHARTS
1,150 VEHICLES PER HOUR
ALBANY DIVISION
(SHEET 11 OF 18)

APPROVED SEPTEMBER 1, 2018

/S/ PATRICK THOMPSON, P.E.
DIRECTOR DESIGN SUPPORT
SERVICES BUREAU

ISSUED UNDER DB 18-003

TA 619-31

I-90 WESTBOUND INTERCHANGES 26 TO 27 (1,150 VEH/HR/LANE)

LANES REQUIRED TO BE OPEN BY HOUR AND TIME OF DAY

SPRING SEASON MARCH 1 THRU MAY 20

HR/DAY	MON	TUES	WEDS	THUR	FRI	SAT	SUN
0	1	1	1	1	1	1	1
1	1	1	1	1	1	1	1
2	1	1	1	1	1	1	1
3	1	1	1	1	1	1	1
4	1	1	1	1	1	1	1
5	1	1	1	1	1	1	1
6	1	1	1	1	1	1	1
7	1	1	1	1	1	1	1
8	1	1	1	1	1	1	1
9	1	1	1	1	1	1	1
10	1	1	1	1	1	1	1
11	1	1	1	1	2	1	1
12	1	1	1	1	2	1	1
13	1	1	1	1	2	1	2
14	1	1	1	1	2	1	2
15	2	2	2	2	2	1	2
16	2	2	2	2	2	1	2
17	2	2	2	2	2	1	2
18	1	1	1	1	2	1	1
19	1	1	1	1	1	1	1
20	1	1	1	1	1	1	1
21	1	1	1	1	1	1	1
22	1	1	1	1	1	1	1
23	1	1	1	1	1	1	1

SUMMER SEASON MAY 21 THRU SEPTEMBER 15

HR/DAY	MON	TUES	WEDS	THUR	FRI	SAT	SUN
0	1	1	1	1	1	1	1
1	1	1	1	1	1	1	1
2	1	1	1	1	1	1	1
3	1	1	1	1	1	1	1
4	1	1	1	1	1	1	1
5	1	1	1	1	1	1	1
6	1	1	1	1	1	1	1
7	1	1	1	1	1	1	1
8	1	1	1	1	1	1	1
9	1	1	1	1	2	2	1
10	1	1	1	2	2	2	2
11	2	1	1	2	2	2	2
12	2	2	2	2	2	2	2
13	2	2	2	2	2	2	2
14	2	2	2	2	2	2	2
15	2	2	2	2	2	2	2
16	2	2	2	2	2	2	2
17	2	2	2	2	2	1	2
18	1	1	1	2	2	1	1
19	1	1	1	1	2	1	1
20	1	1	1	1	1	1	1
21	1	1	1	1	1	1	1
22	1	1	1	1	1	1	1
23	1	1	1	1	1	1	1

LANES REQUIRED TO BE OPEN BY HOUR AND TIME OF DAY

FALL SEASON SEPTEMBER 16 THRU November 30

HR/DAY	MON	TUES	WEDS	THUR	FRI	SAT	SUN
0	1	1	1	1	1	1	1
1	1	1	1	1	1	1	1
2	1	1	1	1	1	1	1
3	1	1	1	1	1	1	1
4	1	1	1	1	1	1	1
5	1	1	1	1	1	1	1
6	1	1	1	1	1	1	1
7	1	1	1	1	1	1	1
8	1	1	1	1	1	1	1
9	1	1	1	1	1	1	1
10	1	1	1	2	1	2	1
11	1	1	1	2	2	2	2
12	2	1	2	1	2	2	2
13	2	1	2	1	2	2	2
14	2	2	2	2	2	1	2
15	2	2	2	2	2	1	2
16	2	2	2	2	2	1	2
17	2	2	2	2	2	1	2
18	1	1	2	1	2	1	1
19	1	1	1	1	1	1	1
20	1	1	1	1	1	1	1
21	1	1	1	1	1	1	1
22	1	1	1	1	1	1	1
23	1	1	1	1	1	1	1

WINTER SEAS. DECEMBER 1 THRU February 28

HR/DAY	MON	TUES	WEDS	THUR	FRI	SAT	SUN
0	1	1	1	1	1	1	1
1	1	1	1	1	1	1	1
2	1	1	1	1	1	1	1
3	1	1	1	1	1	1	1
4	1	1	1	1	1	1	1
5	1	1	1	1	1	1	1
6	1	1	1	1	1	1	1
7	1	1	1	1	1	1	1
8	1	1	1	1	1	1	1
9	1	1	1	1	1	1	1
10	1	1	1	1	1	1	1
11	1	1	1	1	1	1	1
12	1	1	1	1	2	1	1
13	1	1	1	1	2	1	1
14	1	1	1	1	2	1	1
15	2	2	2	2	2	1	1
16	2	2	2	2	2	1	1
17	2	2	2	2	2	1	1
18	1	1	1	1	2	1	1
19	1	1	1	1	1	1	1
20	1	1	1	1	1	1	1
21	1	1	1	1	1	1	1
22	1	1	1	1	1	1	1
23	1	1	1	1	1	1	1

I-90 EASTBOUND INTERCHANGES 27 TO 26 (1,150 VEH/HR/LANE)

LANES REQUIRED TO BE OPEN BY HOUR AND TIME OF DAY

SPRING SEASON MARCH 1 THRU MAY 20

HR/DAY	MON	TUES	WEDS	THUR	FRI	SAT	SUN
0	1	1	1	1	1	1	1
1	1	1	1	1	1	1	1
2	1	1	1	1	1	1	1
3	1	1	1	1	1	1	1
4	1	1	1	1	1	1	1
5	1	1	1	1	1	1	1
6	1	1	1	1	1	1	1
7	2	1	1	2	1	1	1
8	1	1	1	1	1	1	1
9	1	1	1	1	1	1	1
10	1	1	1	1	1	1	1
11	1	1	1	1	2	1	1
12	1	1	1	1	2	1	2
13	1	1	1	1	2	1	2
14	1	1	1	1	2	1	2
15	1	1	1	1	2	1	2
16	1	1	1	2	2	1	2
17	1	1	1	1	2	1	2
18	1	1	1	1	1	1	2
19	1	1	1	1	1	1	2
20	1	1	1	1	1	1	1
21	1	1	1	1	1	1	1
22	1	1	1	1	1	1	1
23	1	1	1	1	1	1	1

SUMMER SEASON MAY 21 THRU SEPTEMBER 15

HR/DAY	MON	TUES	WEDS	THUR	FRI	SAT	SUN
0	1	1	1	1	1	1	1
1	1	1	1	1	1	1	1
2	1	1	1	1	1	1	1
3	1	1	1	1	1	1	1
4	1	1	1	1	1	1	1
5	1	1	1	1	1	1	1
6	2	1	1	1	1	1	1
7	2	2	2	2	1	1	1
8	2	1	1	1	1	1	1
9	1	1	1	1	1	1	1
10	2	1	1	1	2	2	2
11	2	1	1	1	2	2	2
12	2	1	1	2	2	2	2
13	2	1	1	2	2	2	2
14	2	1	1	2	2	2	2
15	2	2	2	2	2	2	2
16	2	2	2	2	2	2	2
17	2	1	1	2	2	1	2
18	2	1	1	1	2	1	2
19	1	1	1	1	1	1	2
20	1	1	1	1	1	1	2
21	1	1	1	1	1	1	1
22	1	1	1	1	1	1	1
23	1	1	1	1	1	1	1

LANES REQUIRED TO BE OPEN BY HOUR AND TIME OF DAY

FALL SEASON SEPTEMBER 16 THRU November 30

HR/DAY	MON	TUES	WEDS	THUR	FRI	SAT	SUN
0	1	1	1	1	1	1	1
1	1	1	1	1	1	1	1
2	1	1	1	1	1	1	1
3	1	1	1	1	1	1	1
4	1	1	1	1	1	1	1
5	1	1	1	1	1	1	1
6	1	1	1	1	1	1	1
7	2	2	2	2	2	1	1
8	1	1	1	1	1	1	1
9	1	1	1	1	1	1	1
10	1	1	1	1	1	1	1
11	2	1	1	1	2	2	2
12	2	1	1	1	2	2	2
13	2	1	2	1	2	2	2
14	2	1	2	1	2	2	2
15	2	2	2	2	2	1	2
16	2	2	2	2	2	1	2
17	2	1	1	2	2	1	2
18	1	1	1	1	2	1	2
19	1	1	1	1	1	1	2
20	1	1	1	1	1	1	1
21	1	1	1	1	1	1	1
22	1	1	1	1	1	1	1
23	1	1	1	1	1	1	1

WINTER SEAS. DECEMBER 1 THRU February 28

HR/DAY	MON	TUES	WEDS	THUR	FRI	SAT	SUN
0	1	1	1	1	1	1	1
1	1	1	1	1	1	1	1
2	1	1	1	1	1	1	1
3	1	1	1	1	1	1	1
4	1	1	1	1	1	1	1
5	1	1	1	1	1	1	1
6	1	1	1	1	1	1	1
7	2	2	2	1	1	1	1
8	1	1	1	1	1	1	1
9	1	1	1	1	1	1	1
10	1	1	1	1	1	1	1
11	1	1	1	1	1	1	1
12	2	1	1	1	1	1	2
13	2	1	1	1	2	1	2
14	2	1	1	1	2	1	2
15	2	1	1	1	2	1	2
16	1	1	1	1	2	1	1
17	1	1	1	1	1	1	1
18	1	1	1	1	1	1	1
19	1	1	1	1	1	1	1
20	1	1	1	1	1	1	1
21	1	1	1	1	1	1	1
22	1	1	1	1	1	1	1
23	1	1	1	1	1	1	1

NOTES:

1) THE NEW YORK STATE THRUWAY IS A LIMITED ACCESS, HIGH-SPEED, HIGH-VOLUME HIGHWAY. TRAFFIC SHALL BE MAINTAINED IN ACCORDANCE WITH THE *MANUAL ON UNIFORM TRAFFIC CONTROL DEVICES (MUTCD)*, THE *WORK ZONE TRAFFIC CONTROL PLANS*, AND THE *STANDARD SPECIFICATIONS* SECTION 619 AS AMENDED BY THE AUTHORITY.

2) LANE CLOSURES ON THE THRUWAY SHALL ONLY BE ALLOWED IN ACCORDANCE WITH THESE TRAFFIC MANAGEMENT TABLE(S), UNLESS INDICATED OTHERWISE IN THE CONTRACT PLANS OR PROPOSAL DOCUMENTS.

3) LANE CLOSURE CHARTS SHALL APPLY AS FOLLOWS:

- 1,150 VEH/HR/LANE: APPLIES TO ALL WORK REQUIRING LANE CLOSURE(S) EXCEPT AS PERMITTED BELOW.

- 1,300 VEH/HR/LANE: APPLIES TO NON-EVASIVE WORK WHERE WORKERS AND/OR EQUIPMENT ARE LOCATED 4 FT. OR MORE FROM TRAVEL (SPACE) LANE, OR AS APPROVED BY THE THRUWAY PROJECT ENGINEER. WORK SHOULD BE ABLE TO BE IMMEDIATELY STOPPED AND LANE CLOSURE(S) REMOVED IN THE EVENT QUEUES, GREATER THAN 1 MILE, DEVELOP.

NEW YORK STATE OF OPPORTUNITY. Thruway Authority

U.S. CUSTOMARY STANDARD SHEET

LANE CLOSURE CHARTS
1,150 VEHICLES PER HOUR
ALBANY DIVISION
(SHEET 12 OF 18)

APPROVED SEPTEMBER 1, 2018

/S/ PATRICK THOMPSON, P.E.
DIRECTOR DESIGN SUPPORT SERVICES BUREAU

ISSUED UNDER DB 18-003

TA 619-31

I-90 WESTBOUND INTERCHANGES 27 TO 28 (1,150 VEH/HR/LANE)

LANES REQUIRED TO BE OPEN BY HOUR AND TIME OF DAY

SPRING SEASON MARCH 1 THRU MAY 20

HR/DAY	MON	TUES	WEDS	THUR	FRI	SAT	SUN
0	1	1	1	1	1	1	1
1	1	1	1	1	1	1	1
2	1	1	1	1	1	1	1
3	1	1	1	1	1	1	1
4	1	1	1	1	1	1	1
5	1	1	1	1	1	1	1
6	1	1	1	1	1	1	1
7	1	1	1	1	1	1	1
8	1	1	1	1	1	1	1
9	1	1	1	1	1	1	1
10	1	1	1	1	1	1	1
11	1	1	1	1	1	1	1
12	1	1	1	1	2	1	1
13	1	1	1	1	2	1	1
14	1	1	1	1	2	1	2
15	1	1	1	1	2	1	2
16	1	1	1	1	2	1	2
17	1	1	1	1	2	1	2
18	1	1	1	1	1	1	1
19	1	1	1	1	1	1	1
20	1	1	1	1	1	1	1
21	1	1	1	1	1	1	1
22	1	1	1	1	1	1	1
23	1	1	1	1	1	1	1

SUMMER SEASON MAY 21 THRU SEPTEMBER 15

HR/DAY	MON	TUES	WEDS	THUR	FRI	SAT	SUN
0	1	1	1	1	1	1	1
1	1	1	1	1	1	1	1
2	1	1	1	1	1	1	1
3	1	1	1	1	1	1	1
4	1	1	1	1	1	1	1
5	1	1	1	1	1	1	1
6	1	1	1	1	1	1	1
7	1	1	1	1	1	1	1
8	1	1	1	1	1	1	1
9	1	1	1	1	1	2	1
10	1	1	1	1	2	2	2
11	2	1	1	1	2	2	2
12	2	1	1	2	2	2	2
13	2	1	1	2	2	2	2
14	2	1	2	2	2	2	2
15	2	2	2	2	2	2	2
16	2	2	2	2	2	1	2
17	1	1	1	2	2	1	2
18	1	1	1	1	2	1	1
19	1	1	1	1	2	1	1
20	1	1	1	1	1	1	1
21	1	1	1	1	1	1	1
22	1	1	1	1	1	1	1
23	1	1	1	1	1	1	1

LANES REQUIRED TO BE OPEN BY HOUR AND TIME OF DAY

FALL SEASON SEPTEMBER 16 THRU November 30

HR/DAY	MON	TUES	WEDS	THUR	FRI	SAT	SUN
0	1	1	1	1	1	1	1
1	1	1	1	1	1	1	1
2	1	1	1	1	1	1	1
3	1	1	1	1	1	1	1
4	1	1	1	1	1	1	1
5	1	1	1	1	1	1	1
6	1	1	1	1	1	1	1
7	1	1	1	1	1	1	1
8	1	1	1	1	1	1	1
9	1	1	1	1	1	1	1
10	1	1	1	2	1	1	1
11	1	1	1	2	2	2	2
12	1	1	1	1	2	2	2
13	1	1	2	1	2	1	2
14	1	1	2	1	2	1	2
15	1	2	2	2	2	1	2
16	1	2	2	2	2	1	2
17	1	1	2	1	2	1	2
18	1	1	1	1	2	1	1
19	1	1	1	1	1	1	1
20	1	1	1	1	1	1	1
21	1	1	1	1	1	1	1
22	1	1	1	1	1	1	1
23	1	1	1	1	1	1	1

WINTER SEAS. DECEMBER 1 THRU February 28

HR/DAY	MON	TUES	WEDS	THUR	FRI	SAT	SUN
0	1	1	1	1	1	1	1
1	1	1	1	1	1	1	1
2	1	1	1	1	1	1	1
3	1	1	1	1	1	1	1
4	1	1	1	1	1	1	1
5	1	1	1	1	1	1	1
6	1	1	1	1	1	1	1
7	1	1	1	1	1	1	1
8	1	1	1	1	1	1	1
9	1	1	1	1	1	1	1
10	1	1	1	1	1	1	1
11	1	1	1	1	1	1	1
12	1	1	1	1	1	1	1
13	1	1	1	1	2	1	1
14	1	1	1	1	2	1	1
15	1	1	1	1	2	1	1
16	1	1	1	1	2	1	1
17	1	1	1	1	2	1	1
18	1	1	1	1	1	1	1
19	1	1	1	1	1	1	1
20	1	1	1	1	1	1	1
21	1	1	1	1	1	1	1
22	1	1	1	1	1	1	1
23	1	1	1	1	1	1	1

I-90 EASTBOUND INTERCHANGES 28 TO 27 (1,150 VEH/HR/LANE)

LANES REQUIRED TO BE OPEN BY HOUR AND TIME OF DAY

SPRING SEASON MARCH 1 THRU MAY 20

HR/DAY	MON	TUES	WEDS	THUR	FRI	SAT	SUN
0	1	1	1	1	1	1	1
1	1	1	1	1	1	1	1
2	1	1	1	1	1	1	1
3	1	1	1	1	1	1	1
4	1	1	1	1	1	1	1
5	1	1	1	1	1	1	1
6	1	1	1	1	1	1	1
7	1	1	1	1	1	1	1
8	1	1	1	1	1	1	1
9	1	1	1	1	1	1	1
10	1	1	1	1	1	1	1
11	1	1	1	1	1	1	1
12	1	1	1	1	1	1	1
13	1	1	1	1	2	1	2
14	1	1	1	1	2	1	2
15	1	1	1	1	2	1	2
16	1	1	1	1	2	1	2
17	1	1	1	1	2	1	2
18	1	1	1	1	1	1	2
19	1	1	1	1	1	1	2
20	1	1	1	1	1	1	1
21	1	1	1	1	1	1	1
22	1	1	1	1	1	1	1
23	1	1	1	1	1	1	1

SUMMER SEASON MAY 21 THRU SEPTEMBER 15

HR/DAY	MON	TUES	WEDS	THUR	FRI	SAT	SUN
0	1	1	1	1	1	1	1
1	1	1	1	1	1	1	1
2	1	1	1	1	1	1	1
3	1	1	1	1	1	1	1
4	1	1	1	1	1	1	1
5	1	1	1	1	1	1	1
6	1	1	1	1	1	1	1
7	1	1	1	1	1	1	1
8	1	1	1	1	1	1	1
9	1	1	1	1	1	1	1
10	2	1	1	1	2	2	1
11	2	1	1	1	2	2	2
12	2	1	1	1	2	2	2
13	2	1	1	1	2	2	2
14	2	1	1	2	2	2	2
15	2	1	1	2	2	1	2
16	2	1	1	2	2	1	2
17	1	1	1	2	2	1	2
18	1	1	1	1	2	1	2
19	1	1	1	1	1	1	2
20	1	1	1	1	1	1	2
21	1	1	1	1	1	1	1
22	1	1	1	1	1	1	1
23	1	1	1	1	1	1	1

LANES REQUIRED TO BE OPEN BY HOUR AND TIME OF DAY

FALL SEASON SEPTEMBER 16 THRU November 30

HR/DAY	MON	TUES	WEDS	THUR	FRI	SAT	SUN
0	1	1	1	1	1	1	1
1	1	1	1	1	1	1	1
2	1	1	1	1	1	1	1
3	1	1	1	1	1	1	1
4	1	1	1	1	1	1	1
5	1	1	1	1	1	1	1
6	1	1	1	1	1	1	1
7	1	1	1	1	1	1	1
8	1	1	1	1	1	1	1
9	1	1	1	1	1	1	1
10	1	1	1	1	1	1	1
11	1	1	1	1	1	1	2
12	1	1	1	1	2	1	2
13	1	1	1	1	2	1	2
14	1	1	1	1	2	1	2
15	1	1	1	1	2	1	2
16	1	1	1	1	2	1	2
17	1	1	1	1	2	1	2
18	1	1	1	1	2	1	2
19	1	1	1	1	1	1	2
20	1	1	1	1	1	1	1
21	1	1	1	1	1	1	1
22	1	1	1	1	1	1	1
23	1	1	1	1	1	1	1

WINTER SEAS. DECEMBER 1 THRU February 28

HR/DAY	MON	TUES	WEDS	THUR	FRI	SAT	SUN
0	1	1	1	1	1	1	1
1	1	1	1	1	1	1	1
2	1	1	1	1	1	1	1
3	1	1	1	1	1	1	1
4	1	1	1	1	1	1	1
5	1	1	1	1	1	1	1
6	1	1	1	1	1	1	1
7	1	1	1	1	1	1	1
8	1	1	1	1	1	1	1
9	1	1	1	1	1	1	1
10	1	1	1	1	1	1	1
11	1	1	1	1	1	1	1
12	1	1	1	1	1	1	1
13	1	1	1	1	1	1	1
14	1	1	1	1	1	1	2
15	1	1	1	1	1	1	2
16	1	1	1	1	1	1	1
17	1	1	1	1	1	1	1
18	1	1	1	1	1	1	1
19	1	1	1	1	1	1	1
20	1	1	1	1	1	1	1
21	1	1	1	1	1	1	1
22	1	1	1	1	1	1	1
23	1	1	1	1	1	1	1

NOTES:

1) THE NEW YORK STATE THRUWAY IS A LIMITED ACCESS, HIGH-SPEED, HIGH-VOLUME HIGHWAY. TRAFFIC SHALL BE MAINTAINED IN ACCORDANCE WITH THE *MANUAL ON UNIFORM TRAFFIC CONTROL DEVICES (MUTCD)*, THE *WORK ZONE TRAFFIC CONTROL PLANS*, AND THE *STANDARD SPECIFICATIONS* SECTION 619 AS AMENDED BY THE AUTHORITY.

2) LANE CLOSURES ON THE THRUWAY SHALL ONLY BE ALLOWED IN ACCORDANCE WITH THESE TRAFFIC MANAGEMENT TABLE(S), UNLESS INDICATED OTHERWISE IN THE CONTRACT PLANS OR PROPOSAL DOCUMENTS.

3) LANE CLOSURE CHARTS SHALL APPLY AS FOLLOWS:

- 1,150 VEH/HR/LANE: APPLIES TO ALL WORK REQUIRING LANE CLOSURE(S) EXCEPT AS PERMITTED BELOW.

- 1,300 VEH/HR/LANE: APPLIES TO NON-EVASIVE WORK WHERE WORKERS AND/OR EQUIPMENT ARE LOCATED 4 FT. OR MORE FROM TRAVEL (SPACE) LANE, OR AS APPROVED BY THE THRUWAY PROJECT ENGINEER. WORK SHOULD BE ABLE TO BE IMMEDIATELY STOPPED AND LANE CLOSURE(S) REMOVED IN THE EVENT QUEUES, GREATER THAN 1 MILE, DEVELOP.

NEW YORK STATE OF OPPORTUNITY. Thruway Authority

U.S. CUSTOMARY STANDARD SHEET

LANE CLOSURE CHARTS
1,150 VEHICLES PER HOUR
ALBANY DIVISION
(SHEET 13 OF 18)

APPROVED SEPTEMBER 1, 2018

/S/ PATRICK THOMPSON, P.E.
DIRECTOR DESIGN SUPPORT SERVICES BUREAU

ISSUED UNDER DB 18-003

TA 619-31

I-90 WESTBOUND INTERCHANGES 28 TO 29 (1,150 VEH/HR/LANE)

LANES REQUIRED TO BE OPEN BY HOUR AND TIME OF DAY

SPRING SEASON MARCH 1 THRU MAY 20

HR/DAY	MON	TUES	WEDS	THUR	FRI	SAT	SUN
0	1	1	1	1	1	1	1
1	1	1	1	1	1	1	1
2	1	1	1	1	1	1	1
3	1	1	1	1	1	1	1
4	1	1	1	1	1	1	1
5	1	1	1	1	1	1	1
6	1	1	1	1	1	1	1
7	1	1	1	1	1	1	1
8	1	1	1	1	1	1	1
9	1	1	1	1	1	1	1
10	1	1	1	1	1	1	1
11	1	1	1	1	1	1	1
12	1	1	1	1	1	1	1
13	1	1	1	1	2	1	1
14	1	1	1	1	2	1	2
15	1	1	1	1	2	1	2
16	1	1	1	1	2	1	2
17	1	1	1	1	2	1	2
18	1	1	1	1	1	1	1
19	1	1	1	1	1	1	1
20	1	1	1	1	1	1	1
21	1	1	1	1	1	1	1
22	1	1	1	1	1	1	1
23	1	1	1	1	1	1	1

SUMMER SEASON MAY 21 THRU SEPTEMBER 15

HR/DAY	MON	TUES	WEDS	THUR	FRI	SAT	SUN
0	1	1	1	1	1	1	1
1	1	1	1	1	1	1	1
2	1	1	1	1	1	1	1
3	1	1	1	1	1	1	1
4	1	1	1	1	1	1	1
5	1	1	1	1	1	1	1
6	1	1	1	1	1	1	1
7	1	1	1	1	1	1	1
8	1	1	1	1	1	1	1
9	1	1	1	1	1	2	1
10	1	1	1	1	2	2	2
11	2	1	1	1	2	2	2
12	2	1	1	1	2	2	2
13	2	1	1	2	2	2	2
14	2	1	1	2	2	2	2
15	2	1	2	2	2	1	2
16	2	1	2	2	2	1	2
17	1	1	1	1	2	1	2
18	1	1	1	1	2	1	1
19	1	1	1	1	2	1	1
20	1	1	1	1	1	1	1
21	1	1	1	1	1	1	1
22	1	1	1	1	1	1	1
23	1	1	1	1	1	1	1

LANES REQUIRED TO BE OPEN BY HOUR AND TIME OF DAY

FALL SEASON SEPTEMBER 16 THRU November 30

HR/DAY	MON	TUES	WEDS	THUR	FRI	SAT	SUN
0	1	1	1	1	1	1	1
1	1	1	1	1	1	1	1
2	1	1	1	1	1	1	1
3	1	1	1	1	1	1	1
4	1	1	1	1	1	1	1
5	1	1	1	1	1	1	1
6	1	1	1	1	1	1	1
7	1	1	1	1	1	1	1
8	1	1	1	1	1	1	1
9	1	1	1	1	1	1	1
10	1	1	1	2	1	1	1
11	1	1	1	2	2	2	2
12	1	1	1	1	2	2	2
13	1	1	2	1	2	1	2
14	1	1	2	1	2	1	2
15	2	1	2	2	2	1	2
16	1	1	2	2	2	1	2
17	1	1	1	1	2	1	2
18	1	1	1	1	2	1	1
19	1	1	1	1	1	1	1
20	1	1	1	1	1	1	1
21	1	1	1	1	1	1	1
22	1	1	1	1	1	1	1
23	1	1	1	1	1	1	1

WINTER SEAS. DECEMBER 1 THRU February 28

HR/DAY	MON	TUES	WEDS	THUR	FRI	SAT	SUN
0	1	1	1	1	1	1	1
1	1	1	1	1	1	1	1
2	1	1	1	1	1	1	1
3	1	1	1	1	1	1	1
4	1	1	1	1	1	1	1
5	1	1	1	1	1	1	1
6	1	1	1	1	1	1	1
7	1	1	1	1	1	1	1
8	1	1	1	1	1	1	1
9	1	1	1	1	1	1	1
10	1	1	1	1	1	1	1
11	1	1	1	1	1	1	1
12	1	1	1	1	1	1	1
13	1	1	1	1	1	1	1
14	1	1	1	1	2	1	1
15	1	1	1	1	2	1	1
16	1	1	1	1	2	1	1
17	1	1	1	1	2	1	1
18	1	1	1	1	1	1	1
19	1	1	1	1	1	1	1
20	1	1	1	1	1	1	1
21	1	1	1	1	1	1	1
22	1	1	1	1	1	1	1
23	1	1	1	1	1	1	1

I-90 EASTBOUND INTERCHANGES 29 TO 28 (1,150 VEH/HR/LANE)

LANES REQUIRED TO BE OPEN BY HOUR AND TIME OF DAY

SPRING SEASON MARCH 1 THRU MAY 20

HR/DAY	MON	TUES	WEDS	THUR	FRI	SAT	SUN
0	1	1	1	1	1	1	1
1	1	1	1	1	1	1	1
2	1	1	1	1	1	1	1
3	1	1	1	1	1	1	1
4	1	1	1	1	1	1	1
5	1	1	1	1	1	1	1
6	1	1	1	1	1	1	1
7	1	1	1	1	1	1	1
8	1	1	1	1	1	1	1
9	1	1	1	1	1	1	1
10	1	1	1	1	1	1	1
11	1	1	1	1	1	1	1
12	1	1	1	1	1	1	1
13	1	1	1	1	1	1	1
14	1	1	1	1	1	1	2
15	1	1	1	1	2	1	2
16	1	1	1	1	1	1	2
17	1	1	1	1	1	1	2
18	1	1	1	1	1	1	2
19	1	1	1	1	1	1	1
20	1	1	1	1	1	1	1
21	1	1	1	1	1	1	1
22	1	1	1	1	1	1	1
23	1	1	1	1	1	1	1

SUMMER SEASON MAY 21 THRU SEPTEMBER 15

HR/DAY	MON	TUES	WEDS	THUR	FRI	SAT	SUN
0	1	1	1	1	1	1	1
1	1	1	1	1	1	1	1
2	1	1	1	1	1	1	1
3	1	1	1	1	1	1	1
4	1	1	1	1	1	1	1
5	1	1	1	1	1	1	1
6	1	1	1	1	1	1	1
7	1	1	1	1	1	1	1
8	1	1	1	1	1	1	1
9	1	1	1	1	1	1	1
10	1	1	1	1	1	1	1
11	2	1	1	1	2	2	2
12	2	1	1	1	2	2	2
13	2	1	1	1	2	1	2
14	2	1	1	1	2	1	2
15	2	1	1	1	2	1	2
16	2	1	1	1	2	1	2
17	2	1	1	1	2	1	2
18	1	1	1	1	1	1	2
19	1	1	1	1	1	1	2
20	1	1	1	1	1	1	1
21	1	1	1	1	1	1	1
22	1	1	1	1	1	1	1
23	1	1	1	1	1	1	1

LANES REQUIRED TO BE OPEN BY HOUR AND TIME OF DAY

FALL SEASON SEPTEMBER 16 THRU November 30

HR/DAY	MON	TUES	WEDS	THUR	FRI	SAT	SUN
0	1	1	1	1	1	1	1
1	1	1	1	1	1	1	1
2	1	1	1	1	1	1	1
3	1	1	1	1	1	1	1
4	1	1	1	1	1	1	1
5	1	1	1	1	1	1	1
6	1	1	1	1	1	1	1
7	1	1	1	1	1	1	1
8	1	1	1	1	1	1	1
9	1	1	1	1	1	1	1
10	1	1	1	1	1	1	1
11	1	1	1	1	1	1	2
12	1	1	1	1	1	1	2
13	1	1	1	1	2	1	2
14	1	1	1	1	2	1	2
15	1	1	1	1	2	1	2
16	1	1	1	1	2	1	2
17	1	1	1	1	2	1	2
18	1	1	1	1	1	1	2
19	1	1	1	1	1	1	1
20	1	1	1	1	1	1	1
21	1	1	1	1	1	1	1
22	1	1	1	1	1	1	1
23	1	1	1	1	1	1	1

WINTER SEAS. DECEMBER 1 THRU February 28

HR/DAY	MON	TUES	WEDS	THUR	FRI	SAT	SUN
0	1	1	1	1	1	1	1
1	1	1	1	1	1	1	1
2	1	1	1	1	1	1	1
3	1	1	1	1	1	1	1
4	1	1	1	1	1	1	1
5	1	1	1	1	1	1	1
6	1	1	1	1	1	1	1
7	1	1	1	1	1	1	1
8	1	1	1	1	1	1	1
9	1	1	1	1	1	1	1
10	1	1	1	1	1	1	1
11	1	1	1	1	1	1	1
12	1	1	1	1	1	1	1
13	1	1	1	1	1	1	1
14	1	1	1	1	1	1	1
15	1	1	1	1	1	1	1
16	1	1	1	1	1	1	1
17	1	1	1	1	1	1	1
18	1	1	1	1	1	1	1
19	1	1	1	1	1	1	1
20	1	1	1	1	1	1	1
21	1	1	1	1	1	1	1
22	1	1	1	1	1	1	1
23	1	1	1	1	1	1	1

NOTES:

1) THE NEW YORK STATE THRUWAY IS A LIMITED ACCESS, HIGH-SPEED, HIGH-VOLUME HIGHWAY. TRAFFIC SHALL BE MAINTAINED IN ACCORDANCE WITH THE *MANUAL ON UNIFORM TRAFFIC CONTROL DEVICES (MUTCD)*, THE *WORK ZONE TRAFFIC CONTROL PLANS*, AND THE *STANDARD SPECIFICATIONS* SECTION 619 AS AMENDED BY THE AUTHORITY.

2) LANE CLOSURES ON THE THRUWAY SHALL ONLY BE ALLOWED IN ACCORDANCE WITH THESE TRAFFIC MANAGEMENT TABLE(S), UNLESS INDICATED OTHERWISE IN THE CONTRACT PLANS OR PROPOSAL DOCUMENTS.

3) LANE CLOSURE CHARTS SHALL APPLY AS FOLLOWS:

- 1,150 VEH/HR/LANE: APPLIES TO ALL WORK REQUIRING LANE CLOSURE(S) EXCEPT AS PERMITTED BELOW.

- 1,300 VEH/HR/LANE: APPLIES TO NON-EVASIVE WORK WHERE WORKERS AND/OR EQUIPMENT ARE LOCATED 4 FT. OR MORE FROM TRAVEL (SPACE) LANE, OR AS APPROVED BY THE THRUWAY PROJECT ENGINEER. WORK SHOULD BE ABLE TO BE IMMEDIATELY STOPPED AND LANE CLOSURE(S) REMOVED IN THE EVENT QUEUES, GREATER THAN 1 MILE, DEVELOP.

NEW YORK STATE OF OPPORTUNITY. Thruway Authority

U.S. CUSTOMARY STANDARD SHEET

LANE CLOSURE CHARTS
1,150 VEHICLES PER HOUR
ALBANY DIVISION
(SHEET 14 OF 18)

APPROVED SEPTEMBER 1, 2018

/S/ PATRICK THOMPSON, P.E.
DIRECTOR DESIGN SUPPORT SERVICES BUREAU

ISSUED UNDER DB 18-003

TA 619-31

BERKSHIRE: NYS 912M WESTBOUND INTERCHANGES B1 TO 21A (1,150 VEH/HR/LANE)

LANES REQUIRED TO BE OPEN BY HOUR AND TIME OF DAY

SPRING SEASON MARCH 1 THRU MAY 20

HR/DAY	MON	TUES	WEDS	THUR	FRI	SAT	SUN
0	1	1	1	1	1	1	1
1	1	1	1	1	1	1	1
2	1	1	1	1	1	1	1
3	1	1	1	1	1	1	1
4	1	1	1	1	1	1	1
5	1	1	1	1	1	1	1
6	1	1	1	1	1	1	1
7	1	1	1	1	1	1	1
8	1	1	1	1	1	1	1
9	1	1	1	1	1	1	1
10	1	1	1	1	1	1	1
11	1	1	1	1	1	1	1
12	1	1	1	1	1	1	1
13	1	1	1	1	1	1	1
14	1	1	1	1	1	1	1
15	1	1	1	1	1	1	1
16	1	1	1	1	1	1	1
17	1	1	1	1	1	1	1
18	1	1	1	1	1	1	1
19	1	1	1	1	1	1	1
20	1	1	1	1	1	1	1
21	1	1	1	1	1	1	1
22	1	1	1	1	1	1	1
23	1	1	1	1	1	1	1

SUMMER SEASON MAY 21 THRU SEPTEMBER 15

HR/DAY	MON	TUES	WEDS	THUR	FRI	SAT	SUN
0	1	1	1	1	1	1	1
1	1	1	1	1	1	1	1
2	1	1	1	1	1	1	1
3	1	1	1	1	1	1	1
4	1	1	1	1	1	1	1
5	1	1	1	1	1	1	1
6	1	1	1	1	1	1	1
7	1	1	1	1	1	1	1
8	1	1	1	1	1	1	1
9	1	1	1	1	1	1	1
10	1	1	1	1	1	1	1
11	1	1	1	1	1	1	1
12	1	1	1	1	1	1	1
13	1	1	1	1	1	1	1
14	1	1	1	1	1	1	1
15	1	1	1	1	1	1	1
16	1	1	1	1	1	1	1
17	1	1	1	1	1	1	1
18	1	1	1	1	1	1	1
19	1	1	1	1	1	1	1
20	1	1	1	1	1	1	1
21	1	1	1	1	1	1	1
22	1	1	1	1	1	1	1
23	1	1	1	1	1	1	1

LANES REQUIRED TO BE OPEN BY HOUR AND TIME OF DAY

FALL SEASON SEPTEMBER 16 THRU November 30

HR/DAY	MON	TUES	WEDS	THUR	FRI	SAT	SUN
0	1	1	1	1	1	1	1
1	1	1	1	1	1	1	1
2	1	1	1	1	1	1	1
3	1	1	1	1	1	1	1
4	1	1	1	1	1	1	1
5	1	1	1	1	1	1	1
6	1	1	1	1	1	1	1
7	1	1	1	1	1	1	1
8	1	1	1	1	1	1	1
9	1	1	1	1	1	1	1
10	1	1	1	1	1	1	1
11	1	1	1	1	1	1	1
12	1	1	1	1	1	1	1
13	1	1	1	1	1	1	1
14	1	1	1	1	1	1	1
15	1	1	1	1	1	1	1
16	1	1	1	1	1	1	1
17	1	1	1	1	1	1	1
18	1	1	1	1	1	1	1
19	1	1	1	1	1	1	1
20	1	1	1	1	1	1	1
21	1	1	1	1	1	1	1
22	1	1	1	1	1	1	1
23	1	1	1	1	1	1	1

WINTER SEAS. DECEMBER 1 THRU February 28

HR/DAY	MON	TUES	WEDS	THUR	FRI	SAT	SUN
0	1	1	1	1	1	1	1
1	1	1	1	1	1	1	1
2	1	1	1	1	1	1	1
3	1	1	1	1	1	1	1
4	1	1	1	1	1	1	1
5	1	1	1	1	1	1	1
6	1	1	1	1	1	1	1
7	1	1	1	1	1	1	1
8	1	1	1	1	1	1	1
9	1	1	1	1	1	1	1
10	1	1	1	1	1	1	1
11	1	1	1	1	1	1	1
12	1	1	1	1	1	1	1
13	1	1	1	1	1	1	1
14	1	1	1	1	1	1	1
15	1	1	1	1	1	1	1
16	1	1	1	1	1	1	1
17	1	1	1	1	1	1	1
18	1	1	1	1	1	1	1
19	1	1	1	1	1	1	1
20	1	1	1	1	1	1	1
21	1	1	1	1	1	1	1
22	1	1	1	1	1	1	1
23	1	1	1	1	1	1	1

BERKSHIRE: NYS 912M EASTBOUND INTERCHANGES 21A TO B1 (1,150 VEH/HR/LANE)

LANES REQUIRED TO BE OPEN BY HOUR AND TIME OF DAY

SPRING SEASON MARCH 1 THRU MAY 20

HR/DAY	MON	TUES	WEDS	THUR	FRI	SAT	SUN
0	1	1	1	1	1	1	1
1	1	1	1	1	1	1	1
2	1	1	1	1	1	1	1
3	1	1	1	1	1	1	1
4	1	1	1	1	1	1	1
5	1	1	1	1	1	1	1
6	1	1	1	1	1	1	1
7	1	1	1	1	1	1	1
8	1	1	1	1	1	1	1
9	1	1	1	1	1	1	1
10	1	1	1	1	1	1	1
11	1	1	1	1	1	1	1
12	1	1	1	1	1	1	1
13	1	1	1	1	1	1	1
14	1	1	1	1	1	1	1
15	1	1	1	1	1	1	1
16	1	1	1	1	1	1	1
17	1	1	1	1	1	1	1
18	1	1	1	1	1	1	1
19	1	1	1	1	1	1	1
20	1	1	1	1	1	1	1
21	1	1	1	1	1	1	1
22	1	1	1	1	1	1	1
23	1	1	1	1	1	1	1

SUMMER SEASON MAY 21 THRU SEPTEMBER 15

HR/DAY	MON	TUES	WEDS	THUR	FRI	SAT	SUN
0	1	1	1	1	1	1	1
1	1	1	1	1	1	1	1
2	1	1	1	1	1	1	1
3	1	1	1	1	1	1	1
4	1	1	1	1	1	1	1
5	1	1	1	1	1	1	1
6	1	1	1	1	1	1	1
7	1	1	1	1	1	1	1
8	1	1	1	1	1	1	1
9	1	1	1	1	1	1	1
10	1	1	1	1	1	1	1
11	1	1	1	1	1	1	1
12	1	1	1	1	1	1	2
13	1	1	1	1	1	1	2
14	1	1	1	1	1	1	2
15	1	1	1	1	1	1	2
16	1	1	1	1	1	1	2
17	1	1	1	1	1	1	2
18	1	1	1	1	1	1	1
19	1	1	1	1	1	1	1
20	1	1	1	1	1	1	1
21	1	1	1	1	1	1	1
22	1	1	1	1	1	1	1
23	1	1	1	1	1	1	1

LANES REQUIRED TO BE OPEN BY HOUR AND TIME OF DAY

FALL SEASON SEPTEMBER 16 THRU November 30

HR/DAY	MON	TUES	WEDS	THUR	FRI	SAT	SUN
0	1	1	1	1	1	1	1
1	1	1	1	1	1	1	1
2	1	1	1	1	1	1	1
3	1	1	1	1	1	1	1
4	1	1	1	1	1	1	1
5	1	1	1	1	1	1	1
6	1	1	1	1	1	1	1
7	1	1	1	1	1	1	1
8	1	1	1	1	1	1	1
9	1	1	1	1	1	1	1
10	1	1	1	1	1	1	1
11	1	1	1	1	1	1	1
12	1	1	1	1	1	1	1
13	1	1	1	1	1	1	1
14	1	1	1	1	1	1	1
15	1	1	1	1	1	1	1
16	1	1	1	1	1	1	1
17	1	1	1	1	1	1	1
18	1	1	1	1	1	1	1
19	1	1	1	1	1	1	1
20	1	1	1	1	1	1	1
21	1	1	1	1	1	1	1
22	1	1	1	1	1	1	1
23	1	1	1	1	1	1	1

WINTER SEAS. DECEMBER 1 THRU February 28

HR/DAY	MON	TUES	WEDS	THUR	FRI	SAT	SUN
0	1	1	1	1	1	1	1
1	1	1	1	1	1	1	1
2	1	1	1	1	1	1	1
3	1	1	1	1	1	1	1
4	1	1	1	1	1	1	1
5	1	1	1	1	1	1	1
6	1	1	1	1	1	1	1
7	1	1	1	1	1	1	1
8	1	1	1	1	1	1	1
9	1	1	1	1	1	1	1
10	1	1	1	1	1	1	1
11	1	1	1	1	1	1	1
12	1	1	1	1	1	1	1
13	1	1	1	1	1	1	1
14	1	1	1	1	1	1	1
15	1	1	1	1	1	1	1
16	1	1	1	1	1	1	1
17	1	1	1	1	1	1	1
18	1	1	1	1	1	1	1
19	1	1	1	1	1	1	1
20	1	1	1	1	1	1	1
21	1	1	1	1	1	1	1
22	1	1	1	1	1	1	1
23	1	1	1	1	1	1	1

NOTES:

1) THE NEW YORK STATE THRUWAY IS A LIMITED ACCESS, HIGH-SPEED, HIGH-VOLUME HIGHWAY. TRAFFIC SHALL BE MAINTAINED IN ACCORDANCE WITH THE *MANUAL ON UNIFORM TRAFFIC CONTROL DEVICES (MUTCD)*, THE *WORK ZONE TRAFFIC CONTROL PLANS*, AND THE *STANDARD SPECIFICATIONS* SECTION 619 AS AMENDED BY THE AUTHORITY.

2) LANE CLOSURES ON THE THRUWAY SHALL ONLY BE ALLOWED IN ACCORDANCE WITH THESE TRAFFIC MANAGEMENT TABLE(S), UNLESS INDICATED OTHERWISE IN THE CONTRACT PLANS OR PROPOSAL DOCUMENTS.

3) LANE CLOSURE CHARTS SHALL APPLY AS FOLLOWS:

- 1,150 VEH/HR/LANE: APPLIES TO ALL WORK REQUIRING LANE CLOSURE(S) EXCEPT AS PERMITTED BELOW.

- 1,300 VEH/HR/LANE: APPLIES TO NON-EVASIVE WORK WHERE WORKERS AND/OR EQUIPMENT ARE LOCATED 4 FT. OR MORE FROM TRAVEL (SPACE) LANE, OR AS APPROVED BY THE THRUWAY PROJECT ENGINEER. WORK SHOULD BE ABLE TO BE IMMEDIATELY STOPPED AND LANE CLOSURE(S) REMOVED IN THE EVENT QUEUES, GREATER THAN 1 MILE, DEVELOP.

NEW YORK STATE OF OPPORTUNITY. Thruway Authority

U.S. CUSTOMARY STANDARD SHEET

LANE CLOSURE CHARTS
1,150 VEHICLES PER HOUR
ALBANY DIVISION
(SHEET 15 OF 18)

APPROVED SEPTEMBER 1, 2018

/S/ PATRICK THOMPSON, P.E.
DIRECTOR DESIGN SUPPORT SERVICES BUREAU

ISSUED UNDER DB 18-003

TA 619-31

BERKSHIRE: I-90 WESTBOUND INTERCHANGES B2 TO B1 (1,150 VEH/HR/LANE)

LANES REQUIRED TO BE OPEN BY HOUR AND TIME OF DAY

SPRING SEASON MARCH 1 THRU MAY 20

HR/DAY	MON	TUES	WEDS	THUR	FRI	SAT	SUN
0	1	1	1	1	1	1	1
1	1	1	1	1	1	1	1
2	1	1	1	1	1	1	1
3	1	1	1	1	1	1	1
4	1	1	1	1	1	1	1
5	1	1	1	1	1	1	1
6	1	1	1	1	1	1	1
7	1	1	1	1	1	1	1
8	1	1	1	1	1	1	1
9	1	1	1	1	1	1	1
10	1	1	1	1	1	1	1
11	1	1	1	1	1	1	1
12	1	1	1	1	2	1	1
13	1	1	1	1	2	1	2
14	1	1	1	1	2	1	2
15	1	1	1	1	2	1	2
16	1	1	1	1	2	1	2
17	1	1	1	1	2	1	2
18	1	1	1	1	2	1	2
19	1	1	1	1	1	1	1
20	1	1	1	1	1	1	1
21	1	1	1	1	1	1	1
22	1	1	1	1	1	1	1
23	1	1	1	1	1	1	1

SUMMER SEASON MAY 21 THRU SEPTEMBER 15

HR/DAY	MON	TUES	WEDS	THUR	FRI	SAT	SUN
0	1	1	1	1	1	1	1
1	1	1	1	1	1	1	1
2	1	1	1	1	1	1	1
3	1	1	1	1	1	1	1
4	1	1	1	1	1	1	1
5	1	1	1	1	1	1	1
6	1	1	1	1	1	1	1
7	1	1	1	1	1	1	1
8	1	1	1	1	1	1	1
9	1	1	1	1	2	2	1
10	2	1	1	2	2	2	2
11	2	1	2	2	2	2	2
12	2	1	2	2	2	2	2
13	2	1	2	2	2	2	2
14	2	1	2	2	2	2	2
15	2	1	2	2	2	2	2
16	2	1	2	2	2	2	2
17	1	1	1	2	2	2	2
18	1	1	1	1	2	1	2
19	1	1	1	1	2	1	2
20	1	1	1	1	2	1	1
21	1	1	1	1	1	1	1
22	1	1	1	1	1	1	1
23	1	1	1	1	1	1	1

LANES REQUIRED TO BE OPEN BY HOUR AND TIME OF DAY

FALL SEASON SEPTEMBER 16 THRU November 30

HR/DAY	MON	TUES	WEDS	THUR	FRI	SAT	SUN
0	1	1	1	1	1	1	1
1	1	1	1	1	1	1	1
2	1	1	1	1	1	1	1
3	1	1	1	1	1	1	1
4	1	1	1	1	1	1	1
5	1	1	1	1	1	1	1
6	1	1	1	1	1	1	1
7	1	1	1	1	1	1	1
8	1	1	1	1	1	1	1
9	1	1	1	1	1	1	1
10	1	1	1	1	1	2	1
11	2	1	1	2	2	2	2
12	2	1	1	1	2	2	2
13	2	1	1	1	2	2	2
14	2	1	1	1	2	2	2
15	2	1	1	1	2	2	2
16	2	1	1	1	2	1	2
17	1	1	1	1	2	1	2
18	1	1	1	1	2	1	2
19	1	1	1	1	2	1	2
20	1	1	1	1	1	1	1
21	1	1	1	1	1	1	1
22	1	1	1	1	1	1	1
23	1	1	1	1	1	1	1

WINTER SEAS. DECEMBER 1 THRU February 28

HR/DAY	MON	TUES	WEDS	THUR	FRI	SAT	SUN
0	1	1	1	1	1	1	1
1	1	1	1	1	1	1	1
2	1	1	1	1	1	1	1
3	1	1	1	1	1	1	1
4	1	1	1	1	1	1	1
5	1	1	1	1	1	1	1
6	1	1	1	1	1	1	1
7	1	1	1	1	1	1	1
8	1	1	1	1	1	1	1
9	1	1	1	1	1	1	1
10	1	1	1	1	1	1	1
11	1	1	1	1	1	2	1
12	1	1	1	1	2	2	2
13	1	1	1	1	2	1	2
14	1	1	1	1	2	1	2
15	1	1	1	1	2	1	1
16	1	1	1	1	2	1	1
17	1	1	1	1	2	1	1
18	1	1	1	1	1	1	1
19	1	1	1	1	1	1	1
20	1	1	1	1	1	1	1
21	1	1	1	1	1	1	1
22	1	1	1	1	1	1	1
23	1	1	1	1	1	1	1

BERKSHIRE: I-90 EASTBOUND INTERCHANGES B1 TO B2 (1,150 VEH/HR/LANE)

LANES REQUIRED TO BE OPEN BY HOUR AND TIME OF DAY

SPRING SEASON MARCH 1 THRU MAY 20

HR/DAY	MON	TUES	WEDS	THUR	FRI	SAT	SUN
0	1	1	1	1	1	1	1
1	1	1	1	1	1	1	1
2	1	1	1	1	1	1	1
3	1	1	1	1	1	1	1
4	1	1	1	1	1	1	1
5	1	1	1	1	1	1	1
6	1	1	1	1	1	1	1
7	1	1	1	1	1	1	1
8	1	1	1	1	1	1	1
9	1	1	1	1	1	1	1
10	1	1	1	1	1	1	1
11	1	1	1	1	2	1	1
12	1	1	1	1	2	1	2
13	1	1	1	1	2	1	2
14	1	1	1	1	2	1	2
15	1	1	1	1	2	1	2
16	1	1	1	1	2	1	2
17	1	1	1	1	2	1	2
18	1	1	1	1	1	1	2
19	1	1	1	1	1	1	1
20	1	1	1	1	1	1	1
21	1	1	1	1	1	1	1
22	1	1	1	1	1	1	1
23	1	1	1	1	1	1	1

SUMMER SEASON MAY 21 THRU SEPTEMBER 15

HR/DAY	MON	TUES	WEDS	THUR	FRI	SAT	SUN
0	1	1	1	1	1	1	1
1	1	1	1	1	1	1	1
2	1	1	1	1	1	1	1
3	1	1	1	1	1	1	1
4	1	1	1	1	1	1	1
5	1	1	1	1	1	1	1
6	1	1	1	1	1	1	1
7	1	1	1	1	1	1	1
8	1	1	1	1	1	1	1
9	1	1	1	1	1	2	2
10	2	1	1	1	2	2	2
11	2	1	1	2	2	2	2
12	2	1	1	2	2	2	2
13	2	1	1	2	2	2	2
14	2	1	1	2	2	2	2
15	2	1	1	2	2	2	2
16	2	1	1	2	2	2	2
17	2	1	1	2	2	1	2
18	2	1	1	1	2	1	2
19	1	1	1	1	1	1	2
20	1	1	1	1	1	1	2
21	1	1	1	1	1	1	1
22	1	1	1	1	1	1	1
23	1	1	1	1	1	1	1

LANES REQUIRED TO BE OPEN BY HOUR AND TIME OF DAY

FALL SEASON SEPTEMBER 16 THRU November 30

HR/DAY	MON	TUES	WEDS	THUR	FRI	SAT	SUN
0	1	1	1	1	1	1	1
1	1	1	1	1	1	1	1
2	1	1	1	1	1	1	1
3	1	1	1	1	1	1	1
4	1	1	1	1	1	1	1
5	1	1	1	1	1	1	1
6	1	1	1	1	1	1	1
7	1	1	1	1	1	1	1
8	1	1	1	1	1	1	1
9	1	1	1	1	1	2	1
10	1	1	1	2	2	2	2
11	2	1	1	2	2	2	2
12	2	1	1	1	2	2	2
13	2	1	1	1	2	2	2
14	2	1	2	1	2	2	2
15	2	1	1	1	2	2	2
16	2	2	1	1	2	1	2
17	2	1	1	1	2	1	2
18	1	1	1	1	2	1	2
19	1	1	1	1	1	1	1
20	1	1	1	1	1	1	1
21	1	1	1	1	1	1	1
22	1	1	1	1	1	1	1
23	1	1	1	1	1	1	1

WINTER SEAS. DECEMBER 1 THRU February 28

HR/DAY	MON	TUES	WEDS	THUR	FRI	SAT	SUN
0	1	1	1	1	1	1	1
1	1	1	1	1	1	1	1
2	1	1	1	1	1	1	1
3	1	1	1	1	1	1	1
4	1	1	1	1	1	1	1
5	1	1	1	1	1	1	1
6	1	1	1	1	1	1	1
7	1	1	1	1	1	1	1
8	1	1	1	1	1	1	1
9	1	1	1	1	1	1	1
10	1	1	1	1	1	1	1
11	1	1	1	1	1	1	1
12	1	1	1	1	1	1	2
13	2	1	1	1	2	1	2
14	2	1	1	1	2	1	2
15	2	1	1	1	2	1	2
16	1	1	1	1	2	1	1
17	1	1	1	1	1	1	1
18	1	1	1	1	1	1	1
19	1	1	1	1	1	1	1
20	1	1	1	1	1	1	1
21	1	1	1	1	1	1	1
22	1	1	1	1	1	1	1
23	1	1	1	1	1	1	1

NOTES:

1) THE NEW YORK STATE THRUWAY IS A LIMITED ACCESS, HIGH-SPEED, HIGH-VOLUME HIGHWAY. TRAFFIC SHALL BE MAINTAINED IN ACCORDANCE WITH THE *MANUAL ON UNIFORM TRAFFIC CONTROL DEVICES (MUTCD)*, THE *WORK ZONE TRAFFIC CONTROL PLANS*, AND THE *STANDARD SPECIFICATIONS* SECTION 619 AS AMENDED BY THE AUTHORITY.

2) LANE CLOSURES ON THE THRUWAY SHALL ONLY BE ALLOWED IN ACCORDANCE WITH THESE TRAFFIC MANAGEMENT TABLE(S), UNLESS INDICATED OTHERWISE IN THE CONTRACT PLANS OR PROPOSAL DOCUMENTS.

3) LANE CLOSURE CHARTS SHALL APPLY AS FOLLOWS:

- 1,150 VEH/HR/LANE: APPLIES TO ALL WORK REQUIRING LANE CLOSURE(S) EXCEPT AS PERMITTED BELOW.

- 1,300 VEH/HR/LANE: APPLIES TO NON-EVASIVE WORK WHERE WORKERS AND/OR EQUIPMENT ARE LOCATED 4 FT. OR MORE FROM TRAVEL (SPACE) LANE, OR AS APPROVED BY THE THRUWAY PROJECT ENGINEER. WORK SHOULD BE ABLE TO BE IMMEDIATELY STOPPED AND LANE CLOSURE(S) REMOVED IN THE EVENT QUEUES, GREATER THAN 1 MILE, DEVELOP.

NEW YORK STATE OF OPPORTUNITY. Thruway Authority

U.S. CUSTOMARY STANDARD SHEET

LANE CLOSURE CHARTS
1,150 VEHICLES PER HOUR
ALBANY DIVISION
(SHEET 16 OF 18)

APPROVED SEPTEMBER 1, 2018

/S/ PATRICK THOMPSON, P.E.
DIRECTOR DESIGN SUPPORT SERVICES BUREAU

ISSUED UNDER DB 18-003

TA 619-31

BERKSHIRE: I-90 WESTBOUND INTERCHANGES B3 TO B2 (1,150 VEH/HR/LANE)

LANES REQUIRED TO BE OPEN BY HOUR AND TIME OF DAY

SPRING SEASON MARCH 1 THRU MAY 20

HR/DAY	MON	TUES	WEDS	THUR	FRI	SAT	SUN
0	1	1	1	1	1	1	1
1	1	1	1	1	1	1	1
2	1	1	1	1	1	1	1
3	1	1	1	1	1	1	1
4	1	1	1	1	1	1	1
5	1	1	1	1	1	1	1
6	1	1	1	1	1	1	1
7	1	1	1	1	1	1	1
8	1	1	1	1	1	1	1
9	1	1	1	1	1	1	1
10	1	1	1	1	1	1	1
11	1	1	1	1	1	1	1
12	1	1	1	1	1	1	1
13	1	1	1	1	2	1	1
14	1	1	1	1	2	1	2
15	1	1	1	1	2	1	2
16	1	1	1	1	2	1	2
17	1	1	1	1	2	1	2
18	1	1	1	1	1	1	1
19	1	1	1	1	1	1	1
20	1	1	1	1	1	1	1
21	1	1	1	1	1	1	1
22	1	1	1	1	1	1	1
23	1	1	1	1	1	1	1

SUMMER SEASON MAY 21 THRU SEPTEMBER 15

HR/DAY	MON	TUES	WEDS	THUR	FRI	SAT	SUN
0	1	1	1	1	1	1	1
1	1	1	1	1	1	1	1
2	1	1	1	1	1	1	1
3	1	1	1	1	1	1	1
4	1	1	1	1	1	1	1
5	1	1	1	1	1	1	1
6	1	1	1	1	1	1	1
7	1	1	1	1	1	1	1
8	1	1	1	1	1	1	1
9	1	1	1	1	1	2	1
10	2	1	1	1	2	2	2
11	2	1	1	2	2	2	2
12	2	1	1	2	2	2	2
13	2	1	1	2	2	2	2
14	2	1	1	2	2	2	2
15	2	1	1	2	2	2	2
16	2	1	1	2	2	2	2
17	1	1	1	1	2	2	2
18	1	1	1	1	2	1	2
19	1	1	1	1	2	1	1
20	1	1	1	1	2	1	1
21	1	1	1	1	1	1	1
22	1	1	1	1	1	1	1
23	1	1	1	1	1	1	1

LANES REQUIRED TO BE OPEN BY HOUR AND TIME OF DAY

FALL SEASON SEPTEMBER 16 THRU November 30

HR/DAY	MON	TUES	WEDS	THUR	FRI	SAT	SUN
0	1	1	1	1	1	1	1
1	1	1	1	1	1	1	1
2	1	1	1	1	1	1	1
3	1	1	1	1	1	1	1
4	1	1	1	1	1	1	1
5	1	1	1	1	1	1	1
6	1	1	1	1	1	1	1
7	1	1	1	1	1	1	1
8	1	1	1	1	1	1	1
9	1	1	1	1	1	1	1
10	1	1	1	1	1	1	1
11	2	1	1	1	2	2	2
12	2	1	1	1	2	2	2
13	2	1	1	1	2	2	2
14	2	1	2	1	2	2	2
15	2	1	1	1	2	1	2
16	1	1	1	1	2	1	2
17	1	1	1	1	2	1	2
18	1	1	1	1	2	1	2
19	1	1	1	1	1	1	1
20	1	1	1	1	1	1	1
21	1	1	1	1	1	1	1
22	1	1	1	1	1	1	1
23	1	1	1	1	1	1	1

WINTER SEAS. DECEMBER 1 THRU February 28

HR/DAY	MON	TUES	WEDS	THUR	FRI	SAT	SUN
0	1	1	1	1	1	1	1
1	1	1	1	1	1	1	1
2	1	1	1	1	1	1	1
3	1	1	1	1	1	1	1
4	1	1	1	1	1	1	1
5	1	1	1	1	1	1	1
6	1	1	1	1	1	1	1
7	1	1	1	1	1	1	1
8	1	1	1	1	1	1	1
9	1	1	1	1	1	1	1
10	1	1	1	1	1	1	1
11	1	1	1	1	1	1	1
12	1	1	1	1	1	1	1
13	1	1	1	1	1	1	1
14	1	1	1	1	2	1	1
15	1	1	1	1	2	1	1
16	1	1	1	1	2	1	1
17	1	1	1	1	1	1	1
18	1	1	1	1	1	1	1
19	1	1	1	1	1	1	1
20	1	1	1	1	1	1	1
21	1	1	1	1	1	1	1
22	1	1	1	1	1	1	1
23	1	1	1	1	1	1	1

BERKSHIRE: I-90 EASTBOUND INTERCHANGES B2 TO B3 (1,150 VEH/HR/LANE)

LANES REQUIRED TO BE OPEN BY HOUR AND TIME OF DAY

SPRING SEASON MARCH 1 THRU MAY 20

HR/DAY	MON	TUES	WEDS	THUR	FRI	SAT	SUN
0	1	1	1	1	1	1	1
1	1	1	1	1	1	1	1
2	1	1	1	1	1	1	1
3	1	1	1	1	1	1	1
4	1	1	1	1	1	1	1
5	1	1	1	1	1	1	1
6	1	1	1	1	1	1	1
7	1	1	1	1	1	1	1
8	1	1	1	1	1	1	1
9	1	1	1	1	1	1	1
10	1	1	1	1	1	1	1
11	1	1	1	1	1	1	1
12	1	1	1	1	2	1	1
13	1	1	1	1	2	1	2
14	1	1	1	1	2	1	2
15	1	1	1	1	2	1	2
16	1	1	1	1	2	1	2
17	1	1	1	1	1	1	2
18	1	1	1	1	1	1	2
19	1	1	1	1	1	1	1
20	1	1	1	1	1	1	1
21	1	1	1	1	1	1	1
22	1	1	1	1	1	1	1
23	1	1	1	1	1	1	1

SUMMER SEASON MAY 21 THRU SEPTEMBER 15

HR/DAY	MON	TUES	WEDS	THUR	FRI	SAT	SUN
0	1	1	1	1	1	1	1
1	1	1	1	1	1	1	1
2	1	1	1	1	1	1	1
3	1	1	1	1	1	1	1
4	1	1	1	1	1	1	1
5	1	1	1	1	1	1	1
6	1	1	1	1	1	1	1
7	1	1	1	1	1	1	1
8	1	1	1	1	1	1	1
9	1	1	1	1	1	2	1
10	2	1	1	1	2	2	2
11	2	1	1	1	2	2	2
12	2	1	1	1	2	2	2
13	2	1	1	1	2	2	2
14	2	1	1	1	2	2	2
15	2	1	1	1	2	2	2
16	2	1	1	1	2	1	2
17	2	1	1	1	2	1	2
18	1	1	1	1	2	1	2
19	1	1	1	1	1	1	2
20	1	1	1	1	1	1	1
21	1	1	1	1	1	1	1
22	1	1	1	1	1	1	1
23	1	1	1	1	1	1	1

LANES REQUIRED TO BE OPEN BY HOUR AND TIME OF DAY

FALL SEASON SEPTEMBER 16 THRU November 30

HR/DAY	MON	TUES	WEDS	THUR	FRI	SAT	SUN
0	1	1	1	1	1	1	1
1	1	1	1	1	1	1	1
2	1	1	1	1	1	1	1
3	1	1	1	1	1	1	1
4	1	1	1	1	1	1	1
5	1	1	1	1	1	1	1
6	1	1	1	1	1	1	1
7	1	1	1	1	1	1	1
8	1	1	1	1	1	1	1
9	1	1	1	1	1	1	1
10	1	1	1	1	1	1	1
11	1	1	1	1	1	1	2
12	1	1	1	1	2	1	2
13	1	1	1	1	2	1	2
14	1	1	1	1	2	1	2
15	1	1	1	1	2	1	2
16	1	1	1	1	2	1	2
17	1	1	1	1	2	1	2
18	1	1	1	1	1	1	1
19	1	1	1	1	1	1	1
20	1	1	1	1	1	1	1
21	1	1	1	1	1	1	1
22	1	1	1	1	1	1	1
23	1	1	1	1	1	1	1

WINTER SEAS. DECEMBER 1 THRU February 28

HR/DAY	MON	TUES	WEDS	THUR	FRI	SAT	SUN
0	1	1	1	1	1	1	1
1	1	1	1	1	1	1	1
2	1	1	1	1	1	1	1
3	1	1	1	1	1	1	1
4	1	1	1	1	1	1	1
5	1	1	1	1	1	1	1
6	1	1	1	1	1	1	1
7	1	1	1	1	1	1	1
8	1	1	1	1	1	1	1
9	1	1	1	1	1	1	1
10	1	1	1	1	1	1	1
11	1	1	1	1	1	1	1
12	1	1	1	1	1	1	1
13	1	1	1	1	1	1	1
14	1	1	1	1	1	1	1
15	1	1	1	1	1	1	1
16	1	1	1	1	1	1	1
17	1	1	1	1	1	1	1
18	1	1	1	1	1	1	1
19	1	1	1	1	1	1	1
20	1	1	1	1	1	1	1
21	1	1	1	1	1	1	1
22	1	1	1	1	1	1	1
23	1	1	1	1	1	1	1

NOTES:

1) THE NEW YORK STATE THRUWAY IS A LIMITED ACCESS, HIGH-SPEED, HIGH-VOLUME HIGHWAY. TRAFFIC SHALL BE MAINTAINED IN ACCORDANCE WITH THE *MANUAL ON UNIFORM TRAFFIC CONTROL DEVICES (MUTCD)*, THE *WORK ZONE TRAFFIC CONTROL PLANS*, AND THE *STANDARD SPECIFICATIONS* SECTION 619 AS AMENDED BY THE AUTHORITY.

2) LANE CLOSURES ON THE THRUWAY SHALL ONLY BE ALLOWED IN ACCORDANCE WITH THESE TRAFFIC MANAGEMENT TABLE(S), UNLESS INDICATED OTHERWISE IN THE CONTRACT PLANS OR PROPOSAL DOCUMENTS.

3) LANE CLOSURE CHARTS SHALL APPLY AS FOLLOWS:

- 1,150 VEH/HR/LANE: APPLIES TO ALL WORK REQUIRING LANE CLOSURE(S) EXCEPT AS PERMITTED BELOW.

- 1,300 VEH/HR/LANE: APPLIES TO NON-EVASIVE WORK WHERE WORKERS AND/OR EQUIPMENT ARE LOCATED 4 FT. OR MORE FROM TRAVEL (SPACE) LANE, OR AS APPROVED BY THE THRUWAY PROJECT ENGINEER. WORK SHOULD BE ABLE TO BE IMMEDIATELY STOPPED AND LANE CLOSURE(S) REMOVED IN THE EVENT QUEUES, GREATER THAN 1 MILE, DEVELOP.

NEW YORK STATE OF OPPORTUNITY. Thruway Authority

U.S. CUSTOMARY STANDARD SHEET

LANE CLOSURE CHARTS
1,150 VEHICLES PER HOUR
ALBANY DIVISION
(SHEET 17 OF 18)

APPROVED SEPTEMBER 1, 2018

/S/ PATRICK THOMPSON, P.E.
DIRECTOR DESIGN SUPPORT SERVICES BUREAU

ISSUED UNDER DB 18-003

TA 619-31

BERKSHIRE: I-90 WESTBOUND INTERCHANGES MASS LINE TO B3 (1,150 VEH/HR/LANE)

LANES REQUIRED TO BE OPEN BY HOUR AND TIME OF DAY

SPRING SEASON MARCH 1 THRU MAY 20

HR/DAY	MON	TUES	WEDS	THUR	FRI	SAT	SUN
0	1	1	1	1	1	1	1
1	1	1	1	1	1	1	1
2	1	1	1	1	1	1	1
3	1	1	1	1	1	1	1
4	1	1	1	1	1	1	1
5	1	1	1	1	1	1	1
6	1	1	1	1	1	1	1
7	1	1	1	1	1	1	1
8	1	1	1	1	1	1	1
9	1	1	1	1	1	1	1
10	1	1	1	1	1	1	1
11	1	1	1	1	1	1	1
12	1	1	1	1	1	1	1
13	1	1	1	1	1	1	1
14	1	1	1	1	2	1	2
15	1	1	1	1	2	1	2
16	1	1	1	1	2	1	2
17	1	1	1	1	2	1	2
18	1	1	1	1	1	1	1
19	1	1	1	1	1	1	1
20	1	1	1	1	1	1	1
21	1	1	1	1	1	1	1
22	1	1	1	1	1	1	1
23	1	1	1	1	1	1	1

SUMMER SEASON MAY 21 THRU SEPTEMBER 15

HR/DAY	MON	TUES	WEDS	THUR	FRI	SAT	SUN
0	1	1	1	1	1	1	1
1	1	1	1	1	1	1	1
2	1	1	1	1	1	1	1
3	1	1	1	1	1	1	1
4	1	1	1	1	1	1	1
5	1	1	1	1	1	1	1
6	1	1	1	1	1	1	1
7	1	1	1	1	1	1	1
8	1	1	1	1	1	1	1
9	1	1	1	1	1	2	1
10	1	1	1	1	2	2	2
11	2	1	1	2	2	2	2
12	2	1	1	2	2	2	2
13	2	1	1	2	2	2	2
14	2	1	1	2	2	2	2
15	2	1	1	2	2	2	2
16	1	1	1	2	2	2	2
17	1	1	1	1	2	2	2
18	1	1	1	1	2	1	2
19	1	1	1	1	2	1	1
20	1	1	1	1	2	1	1
21	1	1	1	1	1	1	1
22	1	1	1	1	1	1	1
23	1	1	1	1	1	1	1

LANES REQUIRED TO BE OPEN BY HOUR AND TIME OF DAY

FALL SEASON SEPTEMBER 16 THRU November 30

HR/DAY	MON	TUES	WEDS	THUR	FRI	SAT	SUN
0	1	1	1	1	1	1	1
1	1	1	1	1	1	1	1
2	1	1	1	1	1	1	1
3	1	1	1	1	1	1	1
4	1	1	1	1	1	1	1
5	1	1	1	1	1	1	1
6	1	1	1	1	1	1	1
7	1	1	1	1	1	1	1
8	1	1	1	1	1	1	1
9	1	1	1	1	1	1	1
10	1	1	1	1	1	1	1
11	1	1	1	1	1	1	1
12	1	1	1	1	2	1	1
13	1	1	1	1	2	1	2
14	1	1	1	1	2	1	2
15	1	1	1	1	2	1	2
16	1	1	1	1	2	1	2
17	1	1	1	1	2	1	2
18	1	1	1	1	2	1	2
19	1	1	1	1	2	1	1
20	1	1	1	1	1	1	1
21	1	1	1	1	1	1	1
22	1	1	1	1	1	1	1
23	1	1	1	1	1	1	1

WINTER SEAS. DECEMBER 1 THRU February 28

HR/DAY	MON	TUES	WEDS	THUR	FRI	SAT	SUN
0	1	1	1	1	1	1	1
1	1	1	1	1	1	1	1
2	1	1	1	1	1	1	1
3	1	1	1	1	1	1	1
4	1	1	1	1	1	1	1
5	1	1	1	1	1	1	1
6	1	1	1	1	1	1	1
7	1	1	1	1	1	1	1
8	1	1	1	1	1	1	1
9	1	1	1	1	1	1	1
10	1	1	1	1	1	1	1
11	1	1	1	1	1	1	1
12	1	1	1	1	1	1	1
13	1	1	1	1	1	1	1
14	1	1	1	1	1	1	1
15	1	1	1	1	1	1	1
16	1	1	1	1	1	1	1
17	1	1	1	1	1	1	1
18	1	1	1	1	1	1	1
19	1	1	1	1	1	1	1
20	1	1	1	1	1	1	1
21	1	1	1	1	1	1	1
22	1	1	1	1	1	1	1
23	1	1	1	1	1	1	1

BERKSHIRE: I-90 EASTBOUND INTERCHANGES B3 TO MASS LINE (1,150 VEH/HR/LANE)

LANES REQUIRED TO BE OPEN BY HOUR AND TIME OF DAY

SPRING SEASON MARCH 1 THRU MAY 20

HR/DAY	MON	TUES	WEDS	THUR	FRI	SAT	SUN
0	1	1	1	1	1	1	1
1	1	1	1	1	1	1	1
2	1	1	1	1	1	1	1
3	1	1	1	1	1	1	1
4	1	1	1	1	1	1	1
5	1	1	1	1	1	1	1
6	1	1	1	1	1	1	1
7	1	1	1	1	1	1	1
8	1	1	1	1	1	1	1
9	1	1	1	1	1	1	1
10	1	1	1	1	1	1	1
11	1	1	1	1	1	1	1
12	1	1	1	1	1	1	1
13	1	1	1	1	1	1	1
14	1	1	1	1	1	1	1
15	1	1	1	1	1	1	1
16	1	1	1	1	1	1	2
17	1	1	1	1	1	1	2
18	1	1	1	1	1	1	1
19	1	1	1	1	1	1	1
20	1	1	1	1	1	1	1
21	1	1	1	1	1	1	1
22	1	1	1	1	1	1	1
23	1	1	1	1	1	1	1

SUMMER SEASON MAY 21 THRU SEPTEMBER 15

HR/DAY	MON	TUES	WEDS	THUR	FRI	SAT	SUN
0	1	1	1	1	1	1	1
1	1	1	1	1	1	1	1
2	1	1	1	1	1	1	1
3	1	1	1	1	1	1	1
4	1	1	1	1	1	1	1
5	1	1	1	1	1	1	1
6	1	1	1	1	1	1	1
7	1	1	1	1	1	1	1
8	1	1	1	1	1	1	1
9	1	1	1	1	1	1	1
10	1	1	1	1	1	2	2
11	2	1	1	1	2	2	2
12	2	1	1	1	2	2	2
13	2	1	1	1	2	2	2
14	2	1	1	1	2	1	2
15	2	1	1	1	2	1	2
16	2	1	1	1	2	1	2
17	1	1	1	1	2	1	2
18	1	1	1	1	1	1	2
19	1	1	1	1	1	1	2
20	1	1	1	1	1	1	1
21	1	1	1	1	1	1	1
22	1	1	1	1	1	1	1
23	1	1	1	1	1	1	1

LANES REQUIRED TO BE OPEN BY HOUR AND TIME OF DAY

FALL SEASON SEPTEMBER 16 THRU November 30

HR/DAY	MON	TUES	WEDS	THUR	FRI	SAT	SUN
0	1	1	1	1	1	1	1
1	1	1	1	1	1	1	1
2	1	1	1	1	1	1	1
3	1	1	1	1	1	1	1
4	1	1	1	1	1	1	1
5	1	1	1	1	1	1	1
6	1	1	1	1	1	1	1
7	1	1	1	1	1	1	1
8	1	1	1	1	1	1	1
9	1	1	1	1	1	1	1
10	1	1	1	1	1	1	1
11	1	1	1	1	1	1	2
12	1	1	1	1	1	1	2
13	1	1	1	1	1	1	2
14	1	1	1	1	1	1	2
15	1	1	1	1	2	1	2
16	1	1	1	1	1	1	2
17	1	1	1	1	1	1	2
18	1	1	1	1	1	1	1
19	1	1	1	1	1	1	1
20	1	1	1	1	1	1	1
21	1	1	1	1	1	1	1
22	1	1	1	1	1	1	1
23	1	1	1	1	1	1	1

WINTER SEAS. DECEMBER 1 THRU February 28

HR/DAY	MON	TUES	WEDS	THUR	FRI	SAT	SUN
0	1	1	1	1	1	1	1
1	1	1	1	1	1	1	1
2	1	1	1	1	1	1	1
3	1	1	1	1	1	1	1
4	1	1	1	1	1	1	1
5	1	1	1	1	1	1	1
6	1	1	1	1	1	1	1
7	1	1	1	1	1	1	1
8	1	1	1	1	1	1	1
9	1	1	1	1	1	1	1
10	1	1	1	1	1	1	1
11	1	1	1	1	1	1	1
12	1	1	1	1	1	1	1
13	1	1	1	1	1	1	1
14	1	1	1	1	1	1	1
15	1	1	1	1	1	1	1
16	1	1	1	1	1	1	1
17	1	1	1	1	1	1	1
18	1	1	1	1	1	1	1
19	1	1	1	1	1	1	1
20	1	1	1	1	1	1	1
21	1	1	1	1	1	1	1
22	1	1	1	1	1	1	1
23	1	1	1	1	1	1	1

NOTES:

1) THE NEW YORK STATE THRUWAY IS A LIMITED ACCESS, HIGH-SPEED, HIGH-VOLUME HIGHWAY. TRAFFIC SHALL BE MAINTAINED IN ACCORDANCE WITH THE *MANUAL ON UNIFORM TRAFFIC CONTROL DEVICES (MUTCD)*, THE *WORK ZONE TRAFFIC CONTROL PLANS*, AND THE *STANDARD SPECIFICATIONS* SECTION 619 AS AMENDED BY THE AUTHORITY.

2) LANE CLOSURES ON THE THRUWAY SHALL ONLY BE ALLOWED IN ACCORDANCE WITH THESE TRAFFIC MANAGEMENT TABLE(S), UNLESS INDICATED OTHERWISE IN THE CONTRACT PLANS OR PROPOSAL DOCUMENTS.

3) LANE CLOSURE CHARTS SHALL APPLY AS FOLLOWS:

- 1,150 VEH/HR/LANE: APPLIES TO ALL WORK REQUIRING LANE CLOSURE(S) EXCEPT AS PERMITTED BELOW.

- 1,300 VEH/HR/LANE: APPLIES TO NON-EVASIVE WORK WHERE WORKERS AND/OR EQUIPMENT ARE LOCATED 4 FT. OR MORE FROM TRAVEL (SPACE) LANE, OR AS APPROVED BY THE THRUWAY PROJECT ENGINEER. WORK SHOULD BE ABLE TO BE IMMEDIATELY STOPPED AND LANE CLOSURE(S) REMOVED IN THE EVENT QUEUES, GREATER THAN 1 MILE, DEVELOP.

NEW YORK STATE OF OPPORTUNITY. Thruway Authority

U.S. CUSTOMARY STANDARD SHEET

LANE CLOSURE CHARTS
1,150 VEHICLES PER HOUR
ALBANY DIVISION
(SHEET 18 OF 18)

APPROVED SEPTEMBER 1, 2018

/S/ PATRICK THOMPSON, P.E.
DIRECTOR DESIGN SUPPORT SERVICES BUREAU

ISSUED UNDER DB 18-003

TA 619-31

I-90 WESTBOUND INTERCHANGES 29 TO 29A (1,150 VEH/HR/LANE)

LANES REQUIRED TO BE OPEN BY HOUR AND TIME OF DAY

SPRING SEASON MARCH 1 THRU MAY 20

HR/DAY	MON	TUES	WEDS	THUR	FRI	SAT	SUN
0	1	1	1	1	1	1	1
1	1	1	1	1	1	1	1
2	1	1	1	1	1	1	1
3	1	1	1	1	1	1	1
4	1	1	1	1	1	1	1
5	1	1	1	1	1	1	1
6	1	1	1	1	1	1	1
7	1	1	1	1	1	1	1
8	1	1	1	1	1	1	1
9	1	1	1	1	1	1	1
10	1	1	1	1	1	1	1
11	1	1	1	1	1	1	1
12	1	1	1	1	1	1	1
13	1	1	1	1	2	1	1
14	1	1	1	1	2	1	2
15	1	1	1	1	2	1	2
16	1	1	1	1	2	1	2
17	1	1	1	1	2	1	2
18	1	1	1	1	2	1	1
19	1	1	1	1	1	1	1
20	1	1	1	1	1	1	1
21	1	1	1	1	1	1	1
22	1	1	1	1	1	1	1
23	1	1	1	1	1	1	1

SUMMER SEASON MAY 21 THRU SEPTEMBER 15

HR/DAY	MON	TUES	WEDS	THUR	FRI	SAT	SUN
0	1	1	1	1	1	1	1
1	1	1	1	1	1	1	1
2	1	1	1	1	1	1	1
3	1	1	1	1	1	1	1
4	1	1	1	1	1	1	1
5	1	1	1	1	1	1	1
6	1	1	1	1	1	1	1
7	1	1	1	1	1	1	1
8	1	1	1	1	1	1	1
9	1	1	1	1	1	1	1
10	1	1	1	1	1	2	1
11	1	1	1	1	2	2	2
12	2	1	1	1	2	2	2
13	2	1	1	1	2	2	2
14	2	1	1	1	2	2	2
15	2	1	1	2	2	1	2
16	2	1	1	2	2	1	2
17	1	1	1	1	2	1	2
18	1	1	1	1	2	1	1
19	1	1	1	1	2	1	1
20	1	1	1	1	1	1	1
21	1	1	1	1	1	1	1
22	1	1	1	1	1	1	1
23	1	1	1	1	1	1	1

LANES REQUIRED TO BE OPEN BY HOUR AND TIME OF DAY

FALL SEASON SEPTEMBER 16 THRU November 30

HR/DAY	MON	TUES	WEDS	THUR	FRI	SAT	SUN
0	1	1	1	1	1	1	1
1	1	1	1	1	1	1	1
2	1	1	1	1	1	1	1
3	1	1	1	1	1	1	1
4	1	1	1	1	1	1	1
5	1	1	1	1	1	1	1
6	1	1	1	1	1	1	1
7	1	1	1	1	1	1	1
8	1	1	1	1	1	1	1
9	1	1	1	1	1	1	1
10	1	1	1	1	1	1	1
11	1	1	1	1	1	1	2
12	1	1	1	1	1	1	2
13	1	1	2	1	2	1	2
14	1	1	2	1	2	1	2
15	1	1	2	1	2	1	2
16	1	1	2	1	2	1	2
17	1	1	2	1	2	1	2
18	1	1	1	1	1	1	1
19	1	1	1	1	1	1	1
20	1	1	1	1	1	1	1
21	1	1	1	1	1	1	1
22	1	1	1	1	1	1	1
23	1	1	1	1	1	1	1

WINTER SEAS. DECEMBER 1 THRU February 28

HR/DAY	MON	TUES	WEDS	THUR	FRI	SAT	SUN
0	1	1	1	1	1	1	1
1	1	1	1	1	1	1	1
2	1	1	1	1	1	1	1
3	1	1	1	1	1	1	1
4	1	1	1	1	1	1	1
5	1	1	1	1	1	1	1
6	1	1	1	1	1	1	1
7	1	1	1	1	1	1	1
8	1	1	1	1	1	1	1
9	1	1	1	1	1	1	1
10	1	1	1	1	1	1	1
11	1	1	1	1	1	1	1
12	1	1	1	1	1	1	1
13	1	1	1	1	1	1	1
14	1	1	1	1	1	1	1
15	1	1	1	1	1	1	1
16	1	1	1	1	1	1	1
17	1	1	1	1	1	1	1
18	1	1	1	1	1	1	1
19	1	1	1	1	1	1	1
20	1	1	1	1	1	1	1
21	1	1	1	1	1	1	1
22	1	1	1	1	1	1	1
23	1	1	1	1	1	1	1

I-90 EASTBOUND INTERCHANGES 29A TO 29 (1,150 VEH/HR/LANE)

LANES REQUIRED TO BE OPEN BY HOUR AND TIME OF DAY

SPRING SEASON MARCH 1 THRU MAY 20

HR/DAY	MON	TUES	WEDS	THUR	FRI	SAT	SUN
0	1	1	1	1	1	1	1
1	1	1	1	1	1	1	1
2	1	1	1	1	1	1	1
3	1	1	1	1	1	1	1
4	1	1	1	1	1	1	1
5	1	1	1	1	1	1	1
6	1	1	1	1	1	1	1
7	1	1	1	1	1	1	1
8	1	1	1	1	1	1	1
9	1	1	1	1	1	1	1
10	1	1	1	1	1	1	1
11	1	1	1	1	1	1	1
12	1	1	1	1	1	1	1
13	1	1	1	1	2	1	2
14	1	1	1	1	2	1	2
15	1	1	1	1	2	1	2
16	1	1	1	1	2	1	2
17	1	1	1	1	1	1	2
18	1	1	1	1	1	1	2
19	1	1	1	1	1	1	1
20	1	1	1	1	1	1	1
21	1	1	1	1	1	1	1
22	1	1	1	1	1	1	1
23	1	1	1	1	1	1	1

SUMMER SEASON MAY 21 THRU SEPTEMBER 15

HR/DAY	MON	TUES	WEDS	THUR	FRI	SAT	SUN
0	1	1	1	1	1	1	1
1	1	1	1	1	1	1	1
2	1	1	1	1	1	1	1
3	1	1	1	1	1	1	1
4	1	1	1	1	1	1	1
5	1	1	1	1	1	1	1
6	1	1	1	1	1	1	1
7	1	1	1	1	1	1	1
8	1	1	1	1	1	1	1
9	1	1	1	1	1	1	1
10	2	1	1	1	2	2	2
11	2	1	1	1	2	2	2
12	2	1	1	1	2	2	2
13	2	1	1	1	2	2	2
14	2	1	1	1	2	1	2
15	2	1	1	1	2	1	2
16	2	1	1	1	2	1	2
17	1	1	1	1	2	1	2
18	1	1	1	1	1	1	2
19	1	1	1	1	1	1	2
20	1	1	1	1	1	1	1
21	1	1	1	1	1	1	1
22	1	1	1	1	1	1	1
23	1	1	1	1	1	1	1

LANES REQUIRED TO BE OPEN BY HOUR AND TIME OF DAY

FALL SEASON SEPTEMBER 16 THRU November 30

HR/DAY	MON	TUES	WEDS	THUR	FRI	SAT	SUN
0	1	1	1	1	1	1	1
1	1	1	1	1	1	1	1
2	1	1	1	1	1	1	1
3	1	1	1	1	1	1	1
4	1	1	1	1	1	1	1
5	1	1	1	1	1	1	1
6	1	1	1	1	1	1	1
7	1	1	1	1	1	1	1
8	1	1	1	1	1	1	1
9	1	1	1	1	1	1	1
10	1	1	1	1	1	1	2
11	1	1	1	1	2	1	2
12	2	1	1	1	2	1	2
13	2	1	1	1	2	1	2
14	2	1	1	1	2	1	2
15	2	1	1	1	2	1	2
16	1	1	1	1	2	1	2
17	1	1	1	1	2	1	2
18	1	1	1	1	1	1	2
19	1	1	1	1	1	1	1
20	1	1	1	1	1	1	1
21	1	1	1	1	1	1	1
22	1	1	1	1	1	1	1
23	1	1	1	1	1	1	1

WINTER SEAS. DECEMBER 1 THRU February 28

HR/DAY	MON	TUES	WEDS	THUR	FRI	SAT	SUN
0	1	1	1	1	1	1	1
1	1	1	1	1	1	1	1
2	1	1	1	1	1	1	1
3	1	1	1	1	1	1	1
4	1	1	1	1	1	1	1
5	1	1	1	1	1	1	1
6	1	1	1	1	1	1	1
7	1	1	1	1	1	1	1
8	1	1	1	1	1	1	1
9	1	1	1	1	1	1	1
10	1	1	1	1	1	1	1
11	1	1	1	1	1	1	1
12	1	1	1	1	1	1	2
13	1	1	1	1	1	1	2
14	1	1	1	1	1	1	2
15	1	1	1	1	1	1	1
16	1	1	1	1	1	1	1
17	1	1	1	1	1	1	1
18	1	1	1	1	1	1	1
19	1	1	1	1	1	1	1
20	1	1	1	1	1	1	1
21	1	1	1	1	1	1	1
22	1	1	1	1	1	1	1
23	1	1	1	1	1	1	1

NOTES:

1) THE NEW YORK STATE THRUWAY IS A LIMITED ACCESS, HIGH-SPEED, HIGH-VOLUME HIGHWAY. TRAFFIC SHALL BE MAINTAINED IN ACCORDANCE WITH THE *MANUAL ON UNIFORM TRAFFIC CONTROL DEVICES (MUTCD)*, THE *WORK ZONE TRAFFIC CONTROL PLANS*, AND THE *STANDARD SPECIFICATIONS* SECTION 619 AS AMENDED BY THE AUTHORITY.

2) LANE CLOSURES ON THE THRUWAY SHALL ONLY BE ALLOWED IN ACCORDANCE WITH THESE TRAFFIC MANAGEMENT TABLE(S), UNLESS INDICATED OTHERWISE IN THE CONTRACT PLANS OR PROPOSAL DOCUMENTS.

3) LANE CLOSURE CHARTS SHALL APPLY AS FOLLOWS:

- 1,150 VEH/HR/LANE: APPLIES TO ALL WORK REQUIRING LANE CLOSURE(S) EXCEPT AS PERMITTED BELOW.

- 1,300 VEH/HR/LANE: APPLIES TO NON-EVASIVE WORK WHERE WORKERS AND/OR EQUIPMENT ARE LOCATED 4 FT. OR MORE FROM TRAVEL (SPACE) LANE, OR AS APPROVED BY THE THRUWAY PROJECT ENGINEER. WORK SHOULD BE ABLE TO BE IMMEDIATELY STOPPED AND LANE CLOSURE(S) REMOVED IN THE EVENT QUEUES, GREATER THAN 1 MILE, DEVELOP.

NEW YORK STATE OF OPPORTUNITY. Thruway Authority

U.S. CUSTOMARY STANDARD SHEET

LANE CLOSURE CHARTS
1,150 VEHICLES PER HOUR
SYRACUSE DIVISION
(SHEET 1 OF 18)

APPROVED SEPTEMBER 1, 2018

/S/ PATRICK THOMPSON, P.E.
DIRECTOR DESIGN SUPPORT SERVICES BUREAU

ISSUED UNDER DB 18-003

TA 619-32

I-90 WESTBOUND INTERCHANGES 29A TO 30 (1,150 VEH/HR/LANE)

LANES REQUIRED TO BE OPEN BY HOUR AND TIME OF DAY

SPRING SEASON MARCH 1 THRU MAY 20

HR/DAY	MON	TUES	WEDS	THUR	FRI	SAT	SUN
0	1	1	1	1	1	1	1
1	1	1	1	1	1	1	1
2	1	1	1	1	1	1	1
3	1	1	1	1	1	1	1
4	1	1	1	1	1	1	1
5	1	1	1	1	1	1	1
6	1	1	1	1	1	1	1
7	1	1	1	1	1	1	1
8	1	1	1	1	1	1	1
9	1	1	1	1	1	1	1
10	1	1	1	1	1	1	1
11	1	1	1	1	1	1	1
12	1	1	1	1	1	1	1
13	1	1	1	1	2	1	1
14	1	1	1	1	2	1	1
15	1	1	1	1	2	1	1
16	1	1	1	1	2	1	1
17	1	1	1	1	2	1	1
18	1	1	1	1	2	1	1
19	1	1	1	1	1	1	1
20	1	1	1	1	1	1	1
21	1	1	1	1	1	1	1
22	1	1	1	1	1	1	1
23	1	1	1	1	1	1	1

SUMMER SEASON MAY 21 THRU SEPTEMBER 15

HR/DAY	MON	TUES	WEDS	THUR	FRI	SAT	SUN
0	1	1	1	1	1	1	1
1	1	1	1	1	1	1	1
2	1	1	1	1	1	1	1
3	1	1	1	1	1	1	1
4	1	1	1	1	1	1	1
5	1	1	1	1	1	1	1
6	1	1	1	1	1	1	1
7	1	1	1	1	1	1	1
8	1	1	1	1	1	1	1
9	1	1	1	1	1	1	1
10	1	1	1	1	2	2	1
11	1	1	1	1	2	2	2
12	2	1	1	1	2	2	2
13	2	1	1	2	2	2	2
14	2	1	1	2	2	2	2
15	2	1	1	2	2	2	2
16	2	1	1	2	2	1	2
17	1	1	1	2	2	1	2
18	1	1	1	1	2	1	2
19	1	1	1	1	2	1	1
20	1	1	1	1	1	1	1
21	1	1	1	1	1	1	1
22	1	1	1	1	1	1	1
23	1	1	1	1	1	1	1

LANES REQUIRED TO BE OPEN BY HOUR AND TIME OF DAY

FALL SEASON SEPTEMBER 16 THRU November 30

HR/DAY	MON	TUES	WEDS	THUR	FRI	SAT	SUN
0	1	1	1	1	1	1	1
1	1	1	1	1	1	1	1
2	1	1	1	1	1	1	1
3	1	1	1	1	1	1	1
4	1	1	1	1	1	1	1
5	1	1	1	1	1	1	1
6	1	1	1	1	1	1	1
7	1	1	1	1	1	1	1
8	1	1	1	1	1	1	1
9	1	1	1	1	1	1	1
10	1	1	1	1	1	1	1
11	1	1	1	1	1	1	2
12	1	1	1	1	2	1	2
13	1	1	1	1	2	1	2
14	1	1	1	1	2	1	2
15	1	1	2	1	2	1	2
16	1	1	2	1	2	1	2
17	1	1	1	1	2	1	2
18	1	1	1	1	2	1	2
19	1	1	1	1	1	1	1
20	1	1	1	1	1	1	1
21	1	1	1	1	1	1	1
22	1	1	1	1	1	1	1
23	1	1	1	1	1	1	1

WINTER SEAS. DECEMBER 1 THRU February 28

HR/DAY	MON	TUES	WEDS	THUR	FRI	SAT	SUN
0	1	1	1	1	1	1	1
1	1	1	1	1	1	1	1
2	1	1	1	1	1	1	1
3	1	1	1	1	1	1	1
4	1	1	1	1	1	1	1
5	1	1	1	1	1	1	1
6	1	1	1	1	1	1	1
7	1	1	1	1	1	1	1
8	1	1	1	1	1	1	1
9	1	1	1	1	1	1	1
10	1	1	1	1	1	1	1
11	1	1	1	1	1	1	1
12	1	1	1	1	1	1	1
13	1	1	1	1	1	1	1
14	1	1	1	1	2	1	1
15	1	1	1	1	2	1	1
16	1	1	1	1	2	1	1
17	1	1	1	1	2	1	1
18	1	1	1	1	1	1	1
19	1	1	1	1	1	1	1
20	1	1	1	1	1	1	1
21	1	1	1	1	1	1	1
22	1	1	1	1	1	1	1
23	1	1	1	1	1	1	1

I-90 EASTBOUND INTERCHANGES 30 TO 29A (1,150 VEH/HR/LANE)

LANES REQUIRED TO BE OPEN BY HOUR AND TIME OF DAY

SPRING SEASON MARCH 1 THRU MAY 20

HR/DAY	MON	TUES	WEDS	THUR	FRI	SAT	SUN
0	1	1	1	1	1	1	1
1	1	1	1	1	1	1	1
2	1	1	1	1	1	1	1
3	1	1	1	1	1	1	1
4	1	1	1	1	1	1	1
5	1	1	1	1	1	1	1
6	1	1	1	1	1	1	1
7	1	1	1	1	1	1	1
8	1	1	1	1	1	1	1
9	1	1	1	1	1	1	1
10	1	1	1	1	1	1	1
11	1	1	1	1	2	1	1
12	1	1	1	1	2	1	1
13	1	1	1	1	2	1	2
14	1	1	1	1	2	1	2
15	1	1	1	1	2	1	2
16	1	1	1	1	2	1	2
17	1	1	1	1	1	1	2
18	1	1	1	1	1	1	2
19	1	1	1	1	1	1	1
20	1	1	1	1	1	1	1
21	1	1	1	1	1	1	1
22	1	1	1	1	1	1	1
23	1	1	1	1	1	1	1

SUMMER SEASON MAY 21 THRU SEPTEMBER 15

HR/DAY	MON	TUES	WEDS	THUR	FRI	SAT	SUN
0	1	1	1	1	1	1	1
1	1	1	1	1	1	1	1
2	1	1	1	1	1	1	1
3	1	1	1	1	1	1	1
4	1	1	1	1	1	1	1
5	1	1	1	1	1	1	1
6	1	1	1	1	1	1	1
7	1	1	1	1	1	1	1
8	1	1	1	1	1	1	1
9	1	1	1	1	1	1	1
10	2	1	1	1	2	2	2
11	2	1	1	1	2	2	2
12	2	1	1	1	2	2	2
13	2	1	1	1	2	2	2
14	2	1	1	1	2	1	2
15	2	1	1	1	2	1	2
16	2	1	1	1	2	1	2
17	1	1	1	1	2	1	2
18	1	1	1	1	1	1	2
19	1	1	1	1	1	1	2
20	1	1	1	1	1	1	1
21	1	1	1	1	1	1	1
22	1	1	1	1	1	1	1
23	1	1	1	1	1	1	1

LANES REQUIRED TO BE OPEN BY HOUR AND TIME OF DAY

FALL SEASON SEPTEMBER 16 THRU November 30

HR/DAY	MON	TUES	WEDS	THUR	FRI	SAT	SUN
0	1	1	1	1	1	1	1
1	1	1	1	1	1	1	1
2	1	1	1	1	1	1	1
3	1	1	1	1	1	1	1
4	1	1	1	1	1	1	1
5	1	1	1	1	1	1	1
6	1	1	1	1	1	1	1
7	1	1	1	1	1	1	1
8	1	1	1	1	1	1	1
9	1	1	1	1	1	1	1
10	1	1	1	1	1	1	2
11	1	1	1	1	2	1	2
12	1	1	1	1	2	1	2
13	1	1	1	1	2	1	2
14	1	1	1	1	2	1	2
15	1	1	1	1	2	1	2
16	1	1	1	1	2	1	2
17	1	1	1	1	2	1	2
18	1	1	1	1	1	1	2
19	1	1	1	1	1	1	1
20	1	1	1	1	1	1	1
21	1	1	1	1	1	1	1
22	1	1	1	1	1	1	1
23	1	1	1	1	1	1	1

WINTER SEAS. DECEMBER 1 THRU February 28

HR/DAY	MON	TUES	WEDS	THUR	FRI	SAT	SUN
0	1	1	1	1	1	1	1
1	1	1	1	1	1	1	1
2	1	1	1	1	1	1	1
3	1	1	1	1	1	1	1
4	1	1	1	1	1	1	1
5	1	1	1	1	1	1	1
6	1	1	1	1	1	1	1
7	1	1	1	1	1	1	1
8	1	1	1	1	1	1	1
9	1	1	1	1	1	1	1
10	1	1	1	1	1	1	1
11	1	1	1	1	1	1	1
12	1	1	1	1	1	1	1
13	1	1	1	1	1	1	1
14	1	1	1	1	1	1	1
15	1	1	1	1	1	1	1
16	1	1	1	1	1	1	1
17	1	1	1	1	1	1	1
18	1	1	1	1	1	1	1
19	1	1	1	1	1	1	1
20	1	1	1	1	1	1	1
21	1	1	1	1	1	1	1
22	1	1	1	1	1	1	1
23	1	1	1	1	1	1	1

NOTES:

1) THE NEW YORK STATE THRUWAY IS A LIMITED ACCESS, HIGH-SPEED, HIGH-VOLUME HIGHWAY. TRAFFIC SHALL BE MAINTAINED IN ACCORDANCE WITH THE *MANUAL ON UNIFORM TRAFFIC CONTROL DEVICES (MUTCD)*, THE *WORK ZONE TRAFFIC CONTROL PLANS*, AND THE *STANDARD SPECIFICATIONS* SECTION 619 AS AMENDED BY THE AUTHORITY.

2) LANE CLOSURES ON THE THRUWAY SHALL ONLY BE ALLOWED IN ACCORDANCE WITH THESE TRAFFIC MANAGEMENT TABLE(S), UNLESS INDICATED OTHERWISE IN THE CONTRACT PLANS OR PROPOSAL DOCUMENTS.

3) LANE CLOSURE CHARTS SHALL APPLY AS FOLLOWS:

- 1,150 VEH/HR/LANE: APPLIES TO ALL WORK REQUIRING LANE CLOSURE(S) EXCEPT AS PERMITTED BELOW.

- 1,300 VEH/HR/LANE: APPLIES TO NON-EVASIVE WORK WHERE WORKERS AND/OR EQUIPMENT ARE LOCATED 4 FT. OR MORE FROM TRAVEL (SPACE) LANE, OR AS APPROVED BY THE THRUWAY PROJECT ENGINEER. WORK SHOULD BE ABLE TO BE IMMEDIATELY STOPPED AND LANE CLOSURE(S) REMOVED IN THE EVENT QUEUES, GREATER THAN 1 MILE, DEVELOP.

NEW YORK STATE OF OPPORTUNITY. Thruway Authority

U.S. CUSTOMARY STANDARD SHEET

LANE CLOSURE CHARTS
1,150 VEHICLES PER HOUR
SYRACUSE DIVISION
(SHEET 2 OF 18)

APPROVED SEPTEMBER 1, 2018

/S/ PATRICK THOMPSON, P.E.
DIRECTOR DESIGN SUPPORT
SERVICES BUREAU

ISSUED UNDER DB 18-003

TA 619-32

I-90 WESTBOUND INTERCHANGES 30 TO 31 (1,150 VEH/HR/LANE)

LANES REQUIRED TO BE OPEN BY HOUR AND TIME OF DAY

SPRING SEASON MARCH 1 THRU MAY 20

HR/DAY	MON	TUES	WEDS	THUR	FRI	SAT	SUN
0	1	1	1	1	1	1	1
1	1	1	1	1	1	1	1
2	1	1	1	1	1	1	1
3	1	1	1	1	1	1	1
4	1	1	1	1	1	1	1
5	1	1	1	1	1	1	1
6	1	1	1	1	1	1	1
7	1	1	1	1	1	1	1
8	1	1	1	1	1	1	1
9	1	1	1	1	1	1	1
10	1	1	1	1	1	1	1
11	1	1	1	1	1	1	1
12	1	1	1	1	1	1	1
13	1	1	1	1	2	1	1
14	1	1	1	1	2	1	2
15	1	1	1	1	2	1	2
16	1	1	1	1	2	1	2
17	1	1	1	1	2	1	2
18	1	1	1	1	2	1	1
19	1	1	1	1	1	1	1
20	1	1	1	1	1	1	1
21	1	1	1	1	1	1	1
22	1	1	1	1	1	1	1
23	1	1	1	1	1	1	1

SUMMER SEASON MAY 21 THRU SEPTEMBER 15

HR/DAY	MON	TUES	WEDS	THUR	FRI	SAT	SUN
0	1	1	1	1	1	1	1
1	1	1	1	1	1	1	1
2	1	1	1	1	1	1	1
3	1	1	1	1	1	1	1
4	1	1	1	1	1	1	1
5	1	1	1	1	1	1	1
6	1	1	1	1	1	1	1
7	1	1	1	1	1	1	1
8	1	1	1	1	1	1	1
9	1	1	1	1	1	1	1
10	1	1	1	1	2	2	1
11	1	1	1	1	2	2	2
12	2	1	1	1	2	2	2
13	2	1	1	2	2	2	2
14	2	1	1	2	2	2	2
15	2	1	1	2	2	2	2
16	2	1	1	2	2	2	2
17	1	1	1	2	2	1	2
18	1	1	1	1	2	1	2
19	1	1	1	1	2	1	1
20	1	1	1	1	1	1	1
21	1	1	1	1	1	1	1
22	1	1	1	1	1	1	1
23	1	1	1	1	1	1	1

LANES REQUIRED TO BE OPEN BY HOUR AND TIME OF DAY

FALL SEASON SEPTEMBER 16 THRU November 30

HR/DAY	MON	TUES	WEDS	THUR	FRI	SAT	SUN
0	1	1	1	1	1	1	1
1	1	1	1	1	1	1	1
2	1	1	1	1	1	1	1
3	1	1	1	1	1	1	1
4	1	1	1	1	1	1	1
5	1	1	1	1	1	1	1
6	1	1	1	1	1	1	1
7	1	1	1	1	1	1	1
8	1	1	1	1	1	1	1
9	1	1	1	1	1	1	1
10	1	1	1	1	1	2	1
11	1	1	1	1	1	2	2
12	1	1	1	1	2	2	2
13	1	1	1	1	2	2	2
14	1	1	1	1	2	1	2
15	1	1	2	1	2	1	2
16	1	1	2	1	2	1	2
17	1	1	2	1	2	1	2
18	1	1	1	1	2	1	2
19	1	1	1	1	1	1	1
20	1	1	1	1	1	1	1
21	1	1	1	1	1	1	1
22	1	1	1	1	1	1	1
23	1	1	1	1	1	1	1

WINTER SEAS. DECEMBER 1 THRU February 28

HR/DAY	MON	TUES	WEDS	THUR	FRI	SAT	SUN
0	1	1	1	1	1	1	1
1	1	1	1	1	1	1	1
2	1	1	1	1	1	1	1
3	1	1	1	1	1	1	1
4	1	1	1	1	1	1	1
5	1	1	1	1	1	1	1
6	1	1	1	1	1	1	1
7	1	1	1	1	1	1	1
8	1	1	1	1	1	1	1
9	1	1	1	1	1	1	1
10	1	1	1	1	1	1	1
11	1	1	1	1	1	1	1
12	1	1	1	1	1	1	1
13	1	1	1	1	1	1	1
14	1	1	1	1	2	1	1
15	1	1	1	1	2	1	1
16	1	1	1	1	2	1	1
17	1	1	1	1	2	1	1
18	1	1	1	1	1	1	1
19	1	1	1	1	1	1	1
20	1	1	1	1	1	1	1
21	1	1	1	1	1	1	1
22	1	1	1	1	1	1	1
23	1	1	1	1	1	1	1

I-90 EASTBOUND INTERCHANGES 31 TO 30 (1,150 VEH/HR/LANE)

LANES REQUIRED TO BE OPEN BY HOUR AND TIME OF DAY

SPRING SEASON MARCH 1 THRU MAY 20

HR/DAY	MON	TUES	WEDS	THUR	FRI	SAT	SUN
0	1	1	1	1	1	1	1
1	1	1	1	1	1	1	1
2	1	1	1	1	1	1	1
3	1	1	1	1	1	1	1
4	1	1	1	1	1	1	1
5	1	1	1	1	1	1	1
6	1	1	1	1	1	1	1
7	1	1	1	1	1	1	1
8	1	1	1	1	1	1	1
9	1	1	1	1	1	1	1
10	1	1	1	1	1	1	1
11	1	1	1	1	1	1	1
12	1	1	1	1	1	1	1
13	1	1	1	1	2	1	2
14	1	1	1	1	2	1	2
15	1	1	1	1	2	1	2
16	1	1	1	1	2	1	2
17	1	1	1	1	2	1	2
18	1	1	1	1	1	1	2
19	1	1	1	1	1	1	1
20	1	1	1	1	1	1	1
21	1	1	1	1	1	1	1
22	1	1	1	1	1	1	1
23	1	1	1	1	1	1	1

SUMMER SEASON MAY 21 THRU SEPTEMBER 15

HR/DAY	MON	TUES	WEDS	THUR	FRI	SAT	SUN
0	1	1	1	1	1	1	1
1	1	1	1	1	1	1	1
2	1	1	1	1	1	1	1
3	1	1	1	1	1	1	1
4	1	1	1	1	1	1	1
5	1	1	1	1	1	1	1
6	1	1	1	1	1	1	1
7	1	1	1	1	1	1	1
8	1	1	1	1	1	1	1
9	1	1	1	1	1	1	1
10	2	1	1	1	2	2	2
11	2	1	1	1	2	2	2
12	2	1	1	1	2	2	2
13	2	1	1	1	2	2	2
14	1	1	2	2	2	2	2
15	1	1	2	2	2	1	2
16	1	1	2	2	2	1	2
17	1	1	1	1	2	1	2
18	1	1	1	1	2	1	2
19	1	1	1	1	1	1	2
20	1	1	1	1	1	1	1
21	1	1	1	1	1	1	1
22	1	1	1	1	1	1	1
23	1	1	1	1	1	1	1

LANES REQUIRED TO BE OPEN BY HOUR AND TIME OF DAY

FALL SEASON SEPTEMBER 16 THRU November 30

HR/DAY	MON	TUES	WEDS	THUR	FRI	SAT	SUN
0	1	1	1	1	1	1	1
1	1	1	1	1	1	1	1
2	1	1	1	1	1	1	1
3	1	1	1	1	1	1	1
4	1	1	1	1	1	1	1
5	1	1	1	1	1	1	1
6	1	1	1	1	1	1	1
7	1	1	1	1	1	1	1
8	1	1	1	1	1	1	1
9	1	1	1	1	1	1	1
10	1	1	1	1	1	1	1
11	1	1	1	1	1	1	2
12	1	1	1	1	1	1	2
13	1	1	1	1	2	1	2
14	1	1	1	1	2	1	2
15	1	1	1	1	2	1	2
16	1	1	1	1	2	1	2
17	1	1	1	1	2	1	2
18	1	1	1	1	1	1	2
19	1	1	1	1	1	1	1
20	1	1	1	1	1	1	1
21	1	1	1	1	1	1	1
22	1	1	1	1	1	1	1
23	1	1	1	1	1	1	1

WINTER SEAS. DECEMBER 1 THRU February 28

HR/DAY	MON	TUES	WEDS	THUR	FRI	SAT	SUN
0	1	1	1	1	1	1	1
1	1	1	1	1	1	1	1
2	1	1	1	1	1	1	1
3	1	1	1	1	1	1	1
4	1	1	1	1	1	1	1
5	1	1	1	1	1	1	1
6	1	1	1	1	1	1	1
7	1	1	1	1	1	1	1
8	1	1	1	1	1	1	1
9	1	1	1	1	1	1	1
10	1	1	1	1	1	1	1
11	1	1	1	1	1	1	1
12	1	1	1	1	1	1	1
13	1	1	1	1	1	1	1
14	1	1	1	1	1	1	1
15	1	1	1	1	1	1	1
16	1	1	1	1	1	1	1
17	1	1	1	1	1	1	1
18	1	1	1	1	1	1	1
19	1	1	1	1	1	1	1
20	1	1	1	1	1	1	1
21	1	1	1	1	1	1	1
22	1	1	1	1	1	1	1
23	1	1	1	1	1	1	1

NOTES:

1) THE NEW YORK STATE THRUWAY IS A LIMITED ACCESS, HIGH-SPEED, HIGH-VOLUME HIGHWAY. TRAFFIC SHALL BE MAINTAINED IN ACCORDANCE WITH THE *MANUAL ON UNIFORM TRAFFIC CONTROL DEVICES (MUTCD)*, THE *WORK ZONE TRAFFIC CONTROL PLANS*, AND THE *STANDARD SPECIFICATIONS* SECTION 619 AS AMENDED BY THE AUTHORITY.

2) LANE CLOSURES ON THE THRUWAY SHALL ONLY BE ALLOWED IN ACCORDANCE WITH THESE TRAFFIC MANAGEMENT TABLE(S), UNLESS INDICATED OTHERWISE IN THE CONTRACT PLANS OR PROPOSAL DOCUMENTS.

3) LANE CLOSURE CHARTS SHALL APPLY AS FOLLOWS:

- 1,150 VEH/HR/LANE: APPLIES TO ALL WORK REQUIRING LANE CLOSURE(S) EXCEPT AS PERMITTED BELOW.

- 1,300 VEH/HR/LANE: APPLIES TO NON-EVASIVE WORK WHERE WORKERS AND/OR EQUIPMENT ARE LOCATED 4 FT. OR MORE FROM TRAVEL (SPACE) LANE, OR AS APPROVED BY THE THRUWAY PROJECT ENGINEER. WORK SHOULD BE ABLE TO BE IMMEDIATELY STOPPED AND LANE CLOSURE(S) REMOVED IN THE EVENT QUEUES, GREATER THAN 1 MILE, DEVELOP.

NEW YORK STATE OF OPPORTUNITY. Thruway Authority

U.S. CUSTOMARY STANDARD SHEET

LANE CLOSURE CHARTS
1,150 VEHICLES PER HOUR
SYRACUSE DIVISION
(SHEET 3 OF 18)

APPROVED SEPTEMBER 1, 2018

/S/ PATRICK THOMPSON, P.E.
DIRECTOR DESIGN SUPPORT SERVICES BUREAU

ISSUED UNDER DB 18-003

TA 619-32

I-90 WESTBOUND INTERCHANGES 31 TO 32 (1,150 VEH/HR/LANE)

LANES REQUIRED TO BE OPEN BY HOUR AND TIME OF DAY

SPRING SEASON MARCH 1 THRU MAY 20

HR/DAY	MON	TUES	WEDS	THUR	FRI	SAT	SUN
0	1	1	1	1	1	1	1
1	1	1	1	1	1	1	1
2	1	1	1	1	1	1	1
3	1	1	1	1	1	1	1
4	1	1	1	1	1	1	1
5	1	1	1	1	1	1	1
6	1	1	1	1	1	1	1
7	1	1	1	1	1	1	1
8	1	1	1	1	1	1	1
9	1	1	1	1	1	1	1
10	1	1	1	1	1	1	1
11	1	1	1	1	1	1	1
12	1	1	1	1	1	1	1
13	1	1	1	1	1	1	1
14	1	1	1	1	2	1	1
15	1	1	1	1	2	1	1
16	1	1	1	1	2	1	1
17	1	1	1	1	2	1	1
18	1	1	1	1	1	1	1
19	1	1	1	1	1	1	1
20	1	1	1	1	1	1	1
21	1	1	1	1	1	1	1
22	1	1	1	1	1	1	1
23	1	1	1	1	1	1	1

SUMMER SEASON MAY 21 THRU SEPTEMBER 15

HR/DAY	MON	TUES	WEDS	THUR	FRI	SAT	SUN
0	1	1	1	1	1	1	1
1	1	1	1	1	1	1	1
2	1	1	1	1	1	1	1
3	1	1	1	1	1	1	1
4	1	1	1	1	1	1	1
5	1	1	1	1	1	1	1
6	1	1	1	1	1	1	1
7	1	1	1	1	1	1	1
8	1	1	1	1	1	1	1
9	1	1	1	1	1	1	1
10	1	1	1	1	2	2	2
11	2	1	1	1	2	2	2
12	2	1	1	1	2	2	2
13	2	1	1	1	2	2	2
14	2	1	1	2	2	2	2
15	2	1	1	2	2	2	2
16	2	1	1	2	2	2	2
17	1	1	1	2	2	1	2
18	1	1	1	1	2	1	2
19	1	1	1	1	1	1	1
20	1	1	1	1	1	1	1
21	1	1	1	1	1	1	1
22	1	1	1	1	1	1	1
23	1	1	1	1	1	1	1

LANES REQUIRED TO BE OPEN BY HOUR AND TIME OF DAY

FALL SEASON SEPTEMBER 16 THRU November 30

HR/DAY	MON	TUES	WEDS	THUR	FRI	SAT	SUN
0	1	1	1	1	1	1	1
1	1	1	1	1	1	1	1
2	1	1	1	1	1	1	1
3	1	1	1	1	1	1	1
4	1	1	1	1	1	1	1
5	1	1	1	1	1	1	1
6	1	1	1	1	1	1	1
7	1	1	1	1	1	1	1
8	1	1	1	1	1	1	1
9	1	1	1	1	1	1	1
10	1	1	1	1	1	1	1
11	1	1	1	1	1	1	2
12	1	1	1	1	1	1	2
13	1	1	1	1	2	1	2
14	1	1	1	1	2	1	2
15	1	1	1	1	2	1	2
16	1	1	1	1	2	1	2
17	1	1	1	1	2	1	2
18	1	1	1	1	2	1	2
19	1	1	1	1	1	1	1
20	1	1	1	1	1	1	1
21	1	1	1	1	1	1	1
22	1	1	1	1	1	1	1
23	1	1	1	1	1	1	1

WINTER SEAS. DECEMBER 1 THRU February 28

HR/DAY	MON	TUES	WEDS	THUR	FRI	SAT	SUN
0	1	1	1	1	1	1	1
1	1	1	1	1	1	1	1
2	1	1	1	1	1	1	1
3	1	1	1	1	1	1	1
4	1	1	1	1	1	1	1
5	1	1	1	1	1	1	1
6	1	1	1	1	1	1	1
7	1	1	1	1	1	1	1
8	1	1	1	1	1	1	1
9	1	1	1	1	1	1	1
10	1	1	1	1	1	1	1
11	1	1	1	1	1	1	1
12	1	1	1	1	1	1	1
13	1	1	1	1	1	1	1
14	1	1	1	1	1	1	1
15	1	1	1	1	1	1	1
16	1	1	1	1	1	1	1
17	1	1	1	1	1	1	1
18	1	1	1	1	1	1	1
19	1	1	1	1	1	1	1
20	1	1	1	1	1	1	1
21	1	1	1	1	1	1	1
22	1	1	1	1	1	1	1
23	1	1	1	1	1	1	1

I-90 EASTBOUND INTERCHANGES 32 TO 31 (1,150 VEH/HR/LANE)

LANES REQUIRED TO BE OPEN BY HOUR AND TIME OF DAY

SPRING SEASON MARCH 1 THRU MAY 20

HR/DAY	MON	TUES	WEDS	THUR	FRI	SAT	SUN
0	1	1	1	1	1	1	1
1	1	1	1	1	1	1	1
2	1	1	1	1	1	1	1
3	1	1	1	1	1	1	1
4	1	1	1	1	1	1	1
5	1	1	1	1	1	1	1
6	1	1	1	1	1	1	1
7	1	1	1	1	1	1	1
8	1	1	1	1	1	1	1
9	1	1	1	1	1	1	1
10	1	1	1	1	1	1	1
11	1	1	1	1	1	1	1
12	1	1	1	1	1	1	1
13	1	1	1	1	2	1	1
14	1	1	1	1	2	1	2
15	1	1	1	1	2	1	2
16	1	1	1	1	2	1	2
17	1	1	1	1	2	1	2
18	1	1	1	1	1	1	1
19	1	1	1	1	1	1	1
20	1	1	1	1	1	1	1
21	1	1	1	1	1	1	1
22	1	1	1	1	1	1	1
23	1	1	1	1	1	1	1

SUMMER SEASON MAY 21 THRU SEPTEMBER 15

HR/DAY	MON	TUES	WEDS	THUR	FRI	SAT	SUN
0	1	1	1	1	1	1	1
1	1	1	1	1	1	1	1
2	1	1	1	1	1	1	1
3	1	1	1	1	1	1	1
4	1	1	1	1	1	1	1
5	1	1	1	1	1	1	1
6	1	1	1	1	1	1	1
7	1	1	1	1	1	1	1
8	1	1	1	1	1	1	1
9	1	1	1	1	1	1	1
10	1	1	1	1	2	2	2
11	1	1	1	1	2	2	2
12	1	1	1	1	2	2	2
13	1	1	1	1	2	2	2
14	1	1	1	1	2	2	2
15	1	1	1	1	2	1	2
16	1	1	1	1	2	1	2
17	1	1	1	1	2	1	2
18	1	1	1	1	2	1	2
19	1	1	1	1	1	1	1
20	1	1	1	1	1	1	1
21	1	1	1	1	1	1	1
22	1	1	1	1	1	1	1
23	1	1	1	1	1	1	1

LANES REQUIRED TO BE OPEN BY HOUR AND TIME OF DAY

FALL SEASON SEPTEMBER 16 THRU November 30

HR/DAY	MON	TUES	WEDS	THUR	FRI	SAT	SUN
0	1	1	1	1	1	1	1
1	1	1	1	1	1	1	1
2	1	1	1	1	1	1	1
3	1	1	1	1	1	1	1
4	1	1	1	1	1	1	1
5	1	1	1	1	1	1	1
6	1	1	1	1	1	1	1
7	1	1	1	1	1	1	1
8	1	1	1	1	1	1	1
9	1	1	1	1	1	1	1
10	1	1	1	1	1	1	1
11	1	1	1	1	1	1	2
12	1	1	1	1	1	1	2
13	1	1	1	1	2	1	2
14	1	1	1	1	2	1	2
15	1	1	1	1	2	1	2
16	1	1	1	1	2	1	2
17	1	1	1	1	2	1	2
18	1	1	1	1	2	1	2
19	1	1	1	1	1	1	1
20	1	1	1	1	1	1	1
21	1	1	1	1	1	1	1
22	1	1	1	1	1	1	1
23	1	1	1	1	1	1	1

WINTER SEAS. DECEMBER 1 THRU February 28

HR/DAY	MON	TUES	WEDS	THUR	FRI	SAT	SUN
0	1	1	1	1	1	1	1
1	1	1	1	1	1	1	1
2	1	1	1	1	1	1	1
3	1	1	1	1	1	1	1
4	1	1	1	1	1	1	1
5	1	1	1	1	1	1	1
6	1	1	1	1	1	1	1
7	1	1	1	1	1	1	1
8	1	1	1	1	1	1	1
9	1	1	1	1	1	1	1
10	1	1	1	1	1	1	1
11	1	1	1	1	1	1	1
12	1	1	1	1	1	1	1
13	1	1	1	1	1	1	1
14	1	1	1	1	1	1	1
15	1	1	1	1	1	1	1
16	1	1	1	1	1	1	1
17	1	1	1	1	1	1	1
18	1	1	1	1	1	1	1
19	1	1	1	1	1	1	1
20	1	1	1	1	1	1	1
21	1	1	1	1	1	1	1
22	1	1	1	1	1	1	1
23	1	1	1	1	1	1	1

NOTES:

1) THE NEW YORK STATE THRUWAY IS A LIMITED ACCESS, HIGH-SPEED, HIGH-VOLUME HIGHWAY. TRAFFIC SHALL BE MAINTAINED IN ACCORDANCE WITH THE *MANUAL ON UNIFORM TRAFFIC CONTROL DEVICES (MUTCD)*, THE *WORK ZONE TRAFFIC CONTROL PLANS*, AND THE *STANDARD SPECIFICATIONS* SECTION 619 AS AMENDED BY THE AUTHORITY.

2) LANE CLOSURES ON THE THRUWAY SHALL ONLY BE ALLOWED IN ACCORDANCE WITH THESE TRAFFIC MANAGEMENT TABLE(S), UNLESS INDICATED OTHERWISE IN THE CONTRACT PLANS OR PROPOSAL DOCUMENTS.

3) LANE CLOSURE CHARTS SHALL APPLY AS FOLLOWS:

- 1,150 VEH/HR/LANE: APPLIES TO ALL WORK REQUIRING LANE CLOSURE(S) EXCEPT AS PERMITTED BELOW.

- 1,300 VEH/HR/LANE: APPLIES TO NON-EVASIVE WORK WHERE WORKERS AND/OR EQUIPMENT ARE LOCATED 4 FT. OR MORE FROM TRAVEL (SPACE) LANE, OR AS APPROVED BY THE THRUWAY PROJECT ENGINEER. WORK SHOULD BE ABLE TO BE IMMEDIATELY STOPPED AND LANE CLOSURE(S) REMOVED IN THE EVENT QUEUES, GREATER THAN 1 MILE, DEVELOP.

NEW YORK STATE OF OPPORTUNITY. Thruway Authority

U.S. CUSTOMARY STANDARD SHEET

LANE CLOSURE CHARTS
1,150 VEHICLES PER HOUR
SYRACUSE DIVISION
(SHEET 4 OF 18)

APPROVED SEPTEMBER 1, 2018

/S/ PATRICK THOMPSON, P.E.
DIRECTOR DESIGN SUPPORT SERVICES BUREAU

ISSUED UNDER DB 18-003

TA 619-32

I-90 WESTBOUND INTERCHANGES 32 TO 33 (1,150 VEH/HR/LANE)

LANES REQUIRED TO BE OPEN BY HOUR AND TIME OF DAY

SPRING SEASON MARCH 1 THRU MAY 20

HR/DAY	MON	TUES	WEDS	THUR	FRI	SAT	SUN
0	1	1	1	1	1	1	1
1	1	1	1	1	1	1	1
2	1	1	1	1	1	1	1
3	1	1	1	1	1	1	1
4	1	1	1	1	1	1	1
5	1	1	1	1	1	1	1
6	1	1	1	1	1	1	1
7	1	1	1	1	1	1	1
8	1	1	1	1	1	1	1
9	1	1	1	1	1	1	1
10	1	1	1	1	1	1	1
11	1	1	1	1	1	1	1
12	1	1	1	1	2	1	1
13	1	1	1	1	2	1	2
14	2	1	1	1	2	1	2
15	2	1	1	2	2	1	2
16	1	1	1	2	2	1	2
17	1	1	1	1	2	1	2
18	1	1	1	1	2	1	2
19	1	1	1	1	1	1	1
20	1	1	1	1	1	1	1
21	1	1	1	1	1	1	1
22	1	1	1	1	1	1	1
23	1	1	1	1	1	1	1

SUMMER SEASON MAY 21 THRU SEPTEMBER 15

HR/DAY	MON	TUES	WEDS	THUR	FRI	SAT	SUN
0	1	1	1	1	1	1	1
1	1	1	1	1	1	1	1
2	1	1	1	1	1	1	1
3	1	1	1	1	1	1	1
4	1	1	1	1	1	1	1
5	1	1	1	1	1	1	1
6	1	1	1	1	1	1	1
7	1	1	1	1	1	1	1
8	1	1	1	1	1	1	1
9	1	1	1	1	2	2	1
10	1	1	1	1	2	2	2
11	2	1	1	2	2	2	2
12	2	1	1	2	2	2	2
13	2	1	1	2	2	2	2
14	2	1	2	2	2	2	2
15	2	2	2	2	2	2	2
16	2	2	2	2	2	2	2
17	2	2	2	2	2	2	2
18	1	1	1	2	2	1	2
19	1	1	1	1	2	1	2
20	1	1	1	1	1	1	1
21	1	1	1	1	1	1	1
22	1	1	1	1	1	1	1
23	1	1	1	1	1	1	1

LANES REQUIRED TO BE OPEN BY HOUR AND TIME OF DAY

FALL SEASON SEPTEMBER 16 THRU November 30

HR/DAY	MON	TUES	WEDS	THUR	FRI	SAT	SUN
0	1	1	1	1	1	1	1
1	1	1	1	1	1	1	1
2	1	1	1	1	1	1	1
3	1	1	1	1	1	1	1
4	1	1	1	1	1	1	1
5	1	1	1	1	1	1	1
6	1	1	1	1	1	1	1
7	1	1	1	1	1	1	1
8	1	1	1	1	1	1	1
9	1	1	1	1	1	1	1
10	1	1	1	1	1	2	1
11	1	1	1	1	2	2	2
12	1	1	1	1	2	2	2
13	1	1	1	1	2	2	2
14	2	2	1	1	2	2	2
15	2	2	2	2	2	2	2
16	2	2	2	2	2	1	2
17	2	2	2	2	2	1	2
18	1	1	1	1	2	1	2
19	1	1	1	1	1	1	1
20	1	1	1	1	1	1	1
21	1	1	1	1	1	1	1
22	1	1	1	1	1	1	1
23	1	1	1	1	1	1	1

WINTER SEAS. DECEMBER 1 THRU February 28

HR/DAY	MON	TUES	WEDS	THUR	FRI	SAT	SUN
0	1	1	1	1	1	1	1
1	1	1	1	1	1	1	1
2	1	1	1	1	1	1	1
3	1	1	1	1	1	1	1
4	1	1	1	1	1	1	1
5	1	1	1	1	1	1	1
6	1	1	1	1	1	1	1
7	1	1	1	1	1	1	1
8	1	1	1	1	1	1	1
9	1	1	1	1	1	1	1
10	1	1	1	1	1	1	1
11	1	1	1	1	1	1	1
12	1	1	1	1	1	1	1
13	1	1	1	1	2	1	1
14	1	1	1	1	2	1	1
15	1	1	1	1	2	1	1
16	1	1	1	1	2	1	1
17	1	1	1	1	2	1	1
18	1	1	1	1	1	1	1
19	1	1	1	1	1	1	1
20	1	1	1	1	1	1	1
21	1	1	1	1	1	1	1
22	1	1	1	1	1	1	1
23	1	1	1	1	1	1	1

I-90 EASTBOUND INTERCHANGES 33 TO 32 (1,150 VEH/HR/LANE)

LANES REQUIRED TO BE OPEN BY HOUR AND TIME OF DAY

SPRING SEASON MARCH 1 THRU MAY 20

HR/DAY	MON	TUES	WEDS	THUR	FRI	SAT	SUN
0	1	1	1	1	1	1	1
1	1	1	1	1	1	1	1
2	1	1	1	1	1	1	1
3	1	1	1	1	1	1	1
4	1	1	1	1	1	1	1
5	1	1	1	1	1	1	1
6	1	1	1	1	1	1	1
7	1	1	1	1	1	1	1
8	1	1	1	1	1	1	1
9	1	1	1	1	1	1	1
10	1	1	1	1	2	1	1
11	1	1	1	1	2	1	1
12	1	1	1	1	2	1	2
13	1	1	1	1	2	1	2
14	1	1	1	1	2	1	2
15	1	1	1	2	2	1	2
16	1	1	1	2	2	1	2
17	1	1	1	2	2	1	2
18	1	1	1	1	1	1	2
19	1	1	1	1	1	1	1
20	1	1	1	1	1	1	1
21	1	1	1	1	1	1	1
22	1	1	1	1	1	1	1
23	1	1	1	1	1	1	1

SUMMER SEASON MAY 21 THRU SEPTEMBER 15

HR/DAY	MON	TUES	WEDS	THUR	FRI	SAT	SUN
0	1	1	1	1	1	1	1
1	1	1	1	1	1	1	1
2	1	1	1	1	1	1	1
3	1	1	1	1	1	1	1
4	1	1	1	1	1	1	1
5	1	1	1	1	1	1	1
6	1	1	1	1	1	1	1
7	1	1	1	1	1	1	1
8	1	1	1	1	1	1	1
9	1	1	1	1	2	2	1
10	2	1	1	2	2	2	2
11	2	1	1	2	2	2	2
12	2	1	1	2	2	2	2
13	2	1	1	2	2	2	2
14	2	1	1	2	2	2	2
15	2	1	1	2	2	2	2
16	2	2	2	2	2	2	2
17	2	2	2	2	2	1	2
18	1	1	1	2	2	1	2
19	1	1	1	1	1	1	2
20	1	1	1	1	1	1	1
21	1	1	1	1	1	1	1
22	1	1	1	1	1	1	1
23	1	1	1	1	1	1	1

LANES REQUIRED TO BE OPEN BY HOUR AND TIME OF DAY

FALL SEASON SEPTEMBER 16 THRU November 30

HR/DAY	MON	TUES	WEDS	THUR	FRI	SAT	SUN
0	1	1	1	1	1	1	1
1	1	1	1	1	1	1	1
2	1	1	1	1	1	1	1
3	1	1	1	1	1	1	1
4	1	1	1	1	1	1	1
5	1	1	1	1	1	1	1
6	1	1	1	1	1	1	1
7	1	1	1	1	1	1	1
8	1	1	1	1	1	1	1
9	1	1	1	1	1	1	1
10	1	1	1	1	2	1	2
11	1	1	1	1	2	1	2
12	1	1	1	1	2	1	2
13	1	1	1	1	2	1	2
14	1	1	1	1	2	1	2
15	2	1	2	1	2	1	2
16	2	2	2	2	2	1	2
17	2	2	1	2	2	1	2
18	1	1	1	1	2	1	2
19	1	1	1	1	1	1	1
20	1	1	1	1	1	1	1
21	1	1	1	1	1	1	1
22	1	1	1	1	1	1	1
23	1	1	1	1	1	1	1

WINTER SEAS. DECEMBER 1 THRU February 28

HR/DAY	MON	TUES	WEDS	THUR	FRI	SAT	SUN
0	1	1	1	1	1	1	1
1	1	1	1	1	1	1	1
2	1	1	1	1	1	1	1
3	1	1	1	1	1	1	1
4	1	1	1	1	1	1	1
5	1	1	1	1	1	1	1
6	1	1	1	1	1	1	1
7	1	1	1	1	1	1	1
8	1	1	1	1	1	1	1
9	1	1	1	1	1	1	1
10	1	1	1	1	1	1	1
11	1	1	1	1	1	1	1
12	1	1	1	1	1	1	1
13	1	1	1	1	1	1	1
14	1	1	1	1	2	1	1
15	1	1	1	1	2	1	1
16	1	1	1	1	2	1	1
17	1	1	1	1	2	1	1
18	1	1	1	1	1	1	1
19	1	1	1	1	1	1	1
20	1	1	1	1	1	1	1
21	1	1	1	1	1	1	1
22	1	1	1	1	1	1	1
23	1	1	1	1	1	1	1

NOTES:

1) THE NEW YORK STATE THRUWAY IS A LIMITED ACCESS, HIGH-SPEED, HIGH-VOLUME HIGHWAY. TRAFFIC SHALL BE MAINTAINED IN ACCORDANCE WITH THE *MANUAL ON UNIFORM TRAFFIC CONTROL DEVICES (MUTCD)*, THE *WORK ZONE TRAFFIC CONTROL PLANS*, AND THE *STANDARD SPECIFICATIONS* SECTION 619 AS AMENDED BY THE AUTHORITY.

2) LANE CLOSURES ON THE THRUWAY SHALL ONLY BE ALLOWED IN ACCORDANCE WITH THESE TRAFFIC MANAGEMENT TABLE(S), UNLESS INDICATED OTHERWISE IN THE CONTRACT PLANS OR PROPOSAL DOCUMENTS.

3) LANE CLOSURE CHARTS SHALL APPLY AS FOLLOWS:

- 1,150 VEH/HR/LANE: APPLIES TO ALL WORK REQUIRING LANE CLOSURE(S) EXCEPT AS PERMITTED BELOW.

- 1,300 VEH/HR/LANE: APPLIES TO NON-EVASIVE WORK WHERE WORKERS AND/OR EQUIPMENT ARE LOCATED 4 FT. OR MORE FROM TRAVEL (SPACE) LANE, OR AS APPROVED BY THE THRUWAY PROJECT ENGINEER. WORK SHOULD BE ABLE TO BE IMMEDIATELY STOPPED AND LANE CLOSURE(S) REMOVED IN THE EVENT QUEUES, GREATER THAN 1 MILE, DEVELOP.

NEW YORK STATE OF OPPORTUNITY. Thruway Authority

U.S. CUSTOMARY STANDARD SHEET

LANE CLOSURE CHARTS
1,150 VEHICLES PER HOUR
SYRACUSE DIVISION
(SHEET 5 OF 18)

APPROVED SEPTEMBER 1, 2018

/S/ PATRICK THOMPSON, P.E.
DIRECTOR DESIGN SUPPORT SERVICES BUREAU

ISSUED UNDER DB 18-003

TA 619-32

I-90 WESTBOUND INTERCHANGES 33 TO 34 (1,150 VEH/HR/LANE)

LANES REQUIRED TO BE OPEN BY HOUR AND TIME OF DAY

SPRING SEASON MARCH 1 THRU MAY 20

HR/DAY	MON	TUES	WEDS	THUR	FRI	SAT	SUN
0	1	1	1	1	1	1	1
1	1	1	1	1	1	1	1
2	1	1	1	1	1	1	1
3	1	1	1	1	1	1	1
4	1	1	1	1	1	1	1
5	1	1	1	1	1	1	1
6	1	1	1	1	1	1	1
7	1	1	1	1	1	1	1
8	1	1	1	1	1	1	1
9	1	1	1	1	1	1	1
10	1	1	1	1	2	2	1
11	2	1	1	1	2	2	1
12	2	1	1	1	2	2	2
13	2	1	1	1	2	1	2
14	2	1	2	2	2	1	2
15	2	2	2	2	2	1	2
16	2	2	2	2	2	1	2
17	2	2	2	2	2	1	2
18	1	1	1	1	2	1	2
19	1	1	1	1	1	1	2
20	1	1	1	1	1	1	1
21	1	1	1	1	1	1	1
22	1	1	1	1	1	1	1
23	1	1	1	1	1	1	1

SUMMER SEASON MAY 21 THRU SEPTEMBER 15

HR/DAY	MON	TUES	WEDS	THUR	FRI	SAT	SUN
0	1	1	1	1	1	1	1
1	1	1	1	1	1	1	1
2	1	1	1	1	1	1	1
3	1	1	1	1	1	1	1
4	1	1	1	1	1	1	1
5	1	1	1	1	1	1	1
6	1	1	1	1	1	1	1
7	2	1	1	1	1	1	1
8	1	1	1	1	1	1	1
9	2	1	1	2	2	2	1
10	2	2	2	2	2	2	2
11	2	2	2	2	2	2	2
12	2	2	2	2	2	2	2
13	2	2	2	2	2	2	2
14	2	2	2	2	2	2	2
15	2	2	2	2	2	2	2
16	2	2	2	2	2	2	2
17	2	2	2	2	2	2	2
18	2	1	2	2	2	2	2
19	1	1	1	1	2	1	2
20	1	1	1	1	1	1	2
21	1	1	1	1	1	1	1
22	1	1	1	1	1	1	1
23	1	1	1	1	1	1	1

LANES REQUIRED TO BE OPEN BY HOUR AND TIME OF DAY

FALL SEASON SEPTEMBER 16 THRU November 30

HR/DAY	MON	TUES	WEDS	THUR	FRI	SAT	SUN
0	1	1	1	1	1	1	1
1	1	1	1	1	1	1	1
2	1	1	1	1	1	1	1
3	1	1	1	1	1	1	1
4	1	1	1	1	1	1	1
5	1	1	1	1	1	1	1
6	1	1	1	1	1	1	1
7	1	1	1	1	1	1	1
8	1	1	1	1	1	1	1
9	1	1	1	1	1	2	1
10	1	1	1	1	1	2	2
11	2	1	1	2	2	2	2
12	2	1	1	2	2	2	2
13	2	1	2	2	2	2	2
14	2	2	2	2	2	2	2
15	2	2	2	2	2	2	2
16	2	2	2	2	2	2	2
17	2	2	2	2	2	2	2
18	1	1	1	1	2	1	2
19	1	1	1	1	2	1	2
20	1	1	1	1	1	1	1
21	1	1	1	1	1	1	1
22	1	1	1	1	1	1	1
23	1	1	1	1	1	1	1

WINTER SEAS. DECEMBER 1 THRU February 28

HR/DAY	MON	TUES	WEDS	THUR	FRI	SAT	SUN
0	1	1	1	1	1	1	1
1	1	1	1	1	1	1	1
2	1	1	1	1	1	1	1
3	1	1	1	1	1	1	1
4	1	1	1	1	1	1	1
5	1	1	1	1	1	1	1
6	1	1	1	1	1	1	1
7	1	1	1	1	1	1	1
8	1	1	1	1	1	1	1
9	1	1	1	1	1	1	1
10	1	1	1	1	1	2	1
11	1	1	1	1	2	2	1
12	1	1	1	1	2	2	2
13	2	1	2	1	2	2	2
14	2	2	2	2	2	2	2
15	2	2	2	2	2	2	2
16	2	2	2	2	2	1	2
17	2	2	2	2	2	1	1
18	1	1	1	1	2	1	1
19	1	1	1	1	1	1	1
20	1	1	1	1	1	1	1
21	1	1	1	1	1	1	1
22	1	1	1	1	1	1	1
23	1	1	1	1	1	1	1

I-90 EASTBOUND INTERCHANGES 34 TO 33 (1,150 VEH/HR/LANE)

LANES REQUIRED TO BE OPEN BY HOUR AND TIME OF DAY

SPRING SEASON MARCH 1 THRU MAY 20

HR/DAY	MON	TUES	WEDS	THUR	FRI	SAT	SUN
0	1	1	1	1	1	1	1
1	1	1	1	1	1	1	1
2	1	1	1	1	1	1	1
3	1	1	1	1	1	1	1
4	1	1	1	1	1	1	1
5	1	1	1	1	1	1	1
6	1	1	1	1	1	1	1
7	1	1	1	1	1	1	1
8	1	1	1	1	1	1	1
9	1	1	1	1	2	1	1
10	2	1	1	1	2	2	1
11	2	1	1	1	2	2	2
12	2	1	1	1	2	2	2
13	2	1	1	1	2	2	2
14	2	1	1	2	2	2	2
15	2	2	2	2	2	2	2
16	2	2	2	2	2	2	2
17	2	2	2	2	2	2	2
18	1	1	1	2	2	1	2
19	1	1	1	1	2	1	1
20	1	1	1	1	1	1	1
21	1	1	1	1	1	1	1
22	1	1	1	1	1	1	1
23	1	1	1	1	1	1	1

SUMMER SEASON MAY 21 THRU SEPTEMBER 15

HR/DAY	MON	TUES	WEDS	THUR	FRI	SAT	SUN
0	1	1	1	1	1	1	1
1	1	1	1	1	1	1	1
2	1	1	1	1	1	1	1
3	1	1	1	1	1	1	1
4	1	1	1	1	1	1	1
5	1	1	1	1	1	1	1
6	1	1	1	1	1	1	1
7	2	2	2	2	2	1	1
8	2	2	2	2	2	2	1
9	2	2	2	2	2	2	2
10	2	2	2	2	2	2	2
11	2	2	2	2	2	2	2
12	2	2	2	2	2	2	2
13	2	2	2	2	2	2	2
14	2	2	2	2	2	2	2
15	2	2	2	2	2	2	2
16	2	2	2	2	2	2	2
17	2	2	2	2	2	2	2
18	2	2	2	2	2	2	2
19	1	1	1	2	2	2	2
20	1	1	1	1	2	1	2
21	1	1	1	1	1	1	1
22	1	1	1	1	1	1	1
23	1	1	1	1	1	1	1

LANES REQUIRED TO BE OPEN BY HOUR AND TIME OF DAY

FALL SEASON SEPTEMBER 16 THRU November 30

HR/DAY	MON	TUES	WEDS	THUR	FRI	SAT	SUN
0	1	1	1	1	1	1	1
1	1	1	1	1	1	1	1
2	1	1	1	1	1	1	1
3	1	1	1	1	1	1	1
4	1	1	1	1	1	1	1
5	1	1	1	1	1	1	1
6	1	1	1	1	1	1	1
7	2	2	2	2	2	1	1
8	2	2	2	2	2	1	1
9	2	2	2	2	2	2	1
10	2	2	2	2	2	2	2
11	2	2	2	2	2	2	2
12	2	2	2	2	2	2	2
13	2	2	2	2	2	2	2
14	2	2	2	2	2	2	2
15	2	2	2	2	2	2	2
16	2	2	2	2	2	2	2
17	2	2	2	2	2	2	2
18	1	2	2	2	2	2	2
19	1	1	1	1	2	2	2
20	1	1	1	1	1	1	1
21	1	1	1	1	1	1	1
22	1	1	1	1	1	1	1
23	1	1	1	1	1	1	1

WINTER SEAS. DECEMBER 1 THRU February 28

HR/DAY	MON	TUES	WEDS	THUR	FRI	SAT	SUN
0	1	1	1	1	1	1	1
1	1	1	1	1	1	1	1
2	1	1	1	1	1	1	1
3	1	1	1	1	1	1	1
4	1	1	1	1	1	1	1
5	1	1	1	1	1	1	1
6	1	1	1	1	1	1	1
7	1	1	1	1	1	1	1
8	1	1	1	1	1	1	1
9	1	1	1	1	1	1	1
10	1	1	2	1	2	2	1
11	1	1	2	2	2	2	2
12	1	1	2	2	2	2	2
13	1	1	2	2	2	2	2
14	2	1	2	2	2	2	2
15	2	2	2	2	2	2	2
16	2	2	2	2	2	2	2
17	2	2	2	2	2	2	2
18	1	1	1	2	2	1	1
19	1	1	1	1	1	1	1
20	1	1	1	1	1	1	1
21	1	1	1	1	1	1	1
22	1	1	1	1	1	1	1
23	1	1	1	1	1	1	1

NOTES:

1) THE NEW YORK STATE THRUWAY IS A LIMITED ACCESS, HIGH-SPEED, HIGH-VOLUME HIGHWAY. TRAFFIC SHALL BE MAINTAINED IN ACCORDANCE WITH THE *MANUAL ON UNIFORM TRAFFIC CONTROL DEVICES (MUTCD)*, THE *WORK ZONE TRAFFIC CONTROL PLANS*, AND THE *STANDARD SPECIFICATIONS* SECTION 619 AS AMENDED BY THE AUTHORITY.

2) LANE CLOSURES ON THE THRUWAY SHALL ONLY BE ALLOWED IN ACCORDANCE WITH THESE TRAFFIC MANAGEMENT TABLE(S), UNLESS INDICATED OTHERWISE IN THE CONTRACT PLANS OR PROPOSAL DOCUMENTS.

3) LANE CLOSURE CHARTS SHALL APPLY AS FOLLOWS:

- 1,150 VEH/HR/LANE: APPLIES TO ALL WORK REQUIRING LANE CLOSURE(S) EXCEPT AS PERMITTED BELOW.

- 1,300 VEH/HR/LANE: APPLIES TO NON-EVASIVE WORK WHERE WORKERS AND/OR EQUIPMENT ARE LOCATED 4 FT. OR MORE FROM TRAVEL (SPACE) LANE, OR AS APPROVED BY THE THRUWAY PROJECT ENGINEER. WORK SHOULD BE ABLE TO BE IMMEDIATELY STOPPED AND LANE CLOSURE(S) REMOVED IN THE EVENT QUEUES, GREATER THAN 1 MILE, DEVELOP.

NEW YORK STATE OF OPPORTUNITY. Thruway Authority

U.S. CUSTOMARY STANDARD SHEET

LANE CLOSURE CHARTS
1,150 VEHICLES PER HOUR
SYRACUSE DIVISION
(SHEET 6 OF 18)

APPROVED SEPTEMBER 1, 2018

/S/ PATRICK THOMPSON, P.E.
DIRECTOR DESIGN SUPPORT SERVICES BUREAU

ISSUED UNDER DB 18-003

TA 619-32

I-90 WESTBOUND INTERCHANGES 34 TO 34A (1,150 VEH/HR/LANE)

LANES REQUIRED TO BE OPEN BY HOUR AND TIME OF DAY

SPRING SEASON MARCH 1 THRU MAY 20

HR/DAY	MON	TUES	WEDS	THUR	FRI	SAT	SUN
0	1	1	1	1	1	1	1
1	1	1	1	1	1	1	1
2	1	1	1	1	1	1	1
3	1	1	1	1	1	1	1
4	1	1	1	1	1	1	1
5	1	1	1	1	1	1	1
6	1	1	1	1	1	1	1
7	2	2	2	2	2	1	1
8	2	2	2	2	2	1	1
9	2	1	1	1	2	1	1
10	2	1	1	1	2	2	1
11	2	1	1	1	2	2	2
12	2	1	1	1	2	2	2
13	2	2	1	2	2	2	2
14	2	2	2	2	2	2	2
15	2	2	2	2	2	2	2
16	2	2	2	2	2	2	2
17	2	2	2	2	2	2	2
18	2	1	1	2	2	1	2
19	1	1	1	1	2	1	2
20	1	1	1	1	1	1	1
21	1	1	1	1	1	1	1
22	1	1	1	1	1	1	1
23	1	1	1	1	1	1	1

SUMMER SEASON MAY 21 THRU SEPTEMBER 15

HR/DAY	MON	TUES	WEDS	THUR	FRI	SAT	SUN
0	1	1	1	1	1	1	1
1	1	1	1	1	1	1	1
2	1	1	1	1	1	1	1
3	1	1	1	1	1	1	1
4	1	1	1	1	1	1	1
5	1	1	1	1	1	1	1
6	2	1	1	1	1	1	1
7	2	2	2	2	2	1	1
8	2	2	2	2	2	1	1
9	2	2	2	2	2	2	1
10	2	2	2	2	2	2	2
11	2	2	2	2	2	2	2
12	2	2	2	2	2	2	2
13	2	2	2	2	2	2	2
14	2	2	2	2	2	2	2
15	2	2	2	2	2	2	2
16	2	2	2	2	2	2	2
17	2	2	2	2	2	2	2
18	2	2	2	2	2	2	2
19	1	1	1	1	2	2	2
20	1	1	1	1	2	1	2
21	1	1	1	1	1	1	1
22	1	1	1	1	1	1	1
23	1	1	1	1	1	1	1

LANES REQUIRED TO BE OPEN BY HOUR AND TIME OF DAY

FALL SEASON SEPTEMBER 16 THRU November 30

HR/DAY	MON	TUES	WEDS	THUR	FRI	SAT	SUN
0	1	1	1	1	1	1	1
1	1	1	1	1	1	1	1
2	1	1	1	1	1	1	1
3	1	1	1	1	1	1	1
4	1	1	1	1	1	1	1
5	1	1	1	1	1	1	1
6	1	1	1	2	1	1	1
7	2	2	2	2	2	1	1
8	2	2	2	2	2	1	1
9	2	2	2	2	2	2	1
10	2	2	2	2	2	2	2
11	2	2	2	2	2	2	2
12	2	2	2	2	2	2	2
13	2	2	2	2	2	2	2
14	2	2	2	2	2	2	2
15	2	2	2	2	2	2	2
16	2	2	2	2	2	2	2
17	2	2	2	2	2	2	2
18	2	2	2	2	2	2	2
19	1	1	1	1	2	1	2
20	1	1	1	1	1	1	2
21	1	1	1	1	1	1	1
22	1	1	1	1	1	1	1
23	1	1	1	1	1	1	1

WINTER SEAS. DECEMBER 1 THRU February 28

HR/DAY	MON	TUES	WEDS	THUR	FRI	SAT	SUN
0	1	1	1	1	1	1	1
1	1	1	1	1	1	1	1
2	1	1	1	1	1	1	1
3	1	1	1	1	1	1	1
4	1	1	1	1	1	1	1
5	1	1	1	1	1	1	1
6	1	1	1	1	1	1	1
7	2	2	2	2	2	1	1
8	2	2	2	2	2	1	1
9	1	1	1	1	1	1	1
10	1	1	1	1	2	2	1
11	1	1	2	1	2	2	2
12	2	2	2	2	2	2	2
13	2	2	2	2	2	2	2
14	2	2	2	2	2	2	2
15	2	2	2	2	2	2	2
16	2	2	2	2	2	2	2
17	2	2	2	2	2	1	2
18	1	1	1	1	2	1	1
19	1	1	1	1	1	1	1
20	1	1	1	1	1	1	1
21	1	1	1	1	1	1	1
22	1	1	1	1	1	1	1
23	1	1	1	1	1	1	1

I-90 EASTBOUND INTERCHANGES 34A TO 34 (1,150 VEH/HR/LANE)

LANES REQUIRED TO BE OPEN BY HOUR AND TIME OF DAY

SPRING SEASON MARCH 1 THRU MAY 20

HR/DAY	MON	TUES	WEDS	THUR	FRI	SAT	SUN
0	1	1	1	1	1	1	1
1	1	1	1	1	1	1	1
2	1	1	1	1	1	1	1
3	1	1	1	1	1	1	1
4	1	1	1	1	1	1	1
5	1	1	1	1	1	1	1
6	1	1	1	1	1	1	1
7	2	1	1	1	1	1	1
8	2	1	1	1	2	1	1
9	2	1	1	1	2	2	1
10	2	1	1	2	2	2	2
11	2	1	1	2	2	2	2
12	2	1	1	2	2	2	2
13	2	1	1	2	2	2	2
14	2	2	2	2	2	2	2
15	2	2	2	2	2	2	2
16	2	2	2	2	2	2	2
17	2	2	2	2	2	2	2
18	1	1	1	2	2	2	2
19	1	1	1	1	2	1	1
20	1	1	1	1	1	1	1
21	1	1	1	1	1	1	1
22	1	1	1	1	1	1	1
23	1	1	1	1	1	1	1

SUMMER SEASON MAY 21 THRU SEPTEMBER 15

HR/DAY	MON	TUES	WEDS	THUR	FRI	SAT	SUN
0	1	1	1	1	1	1	1
1	1	1	1	1	1	1	1
2	1	1	1	1	1	1	1
3	1	1	1	1	1	1	1
4	1	1	1	1	1	1	1
5	1	1	1	1	1	1	1
6	1	1	1	1	1	1	1
7	2	2	2	2	2	1	1
8	2	2	2	2	2	2	1
9	2	2	2	2	2	2	2
10	2	2	2	2	2	2	2
11	2	2	2	2	2	2	2
12	2	2	2	2	2	2	2
13	2	2	2	2	2	2	2
14	2	2	2	2	2	2	2
15	2	2	2	2	2	2	2
16	2	2	2	2	2	2	2
17	2	2	2	2	2	2	2
18	2	2	2	2	2	2	2
19	1	1	1	2	2	2	2
20	1	1	1	1	2	1	1
21	1	1	1	1	1	1	1
22	1	1	1	1	1	1	1
23	1	1	1	1	1	1	1

LANES REQUIRED TO BE OPEN BY HOUR AND TIME OF DAY

FALL SEASON SEPTEMBER 16 THRU November 30

HR/DAY	MON	TUES	WEDS	THUR	FRI	SAT	SUN
0	1	1	1	1	1	1	1
1	1	1	1	1	1	1	1
2	1	1	1	1	1	1	1
3	1	1	1	1	1	1	1
4	1	1	1	1	1	1	1
5	1	1	1	1	1	1	1
6	1	1	1	1	1	1	1
7	2	2	2	2	2	1	1
8	2	2	2	2	2	1	1
9	2	2	2	2	2	2	2
10	2	2	2	2	2	2	2
11	2	2	2	2	2	2	2
12	2	2	2	2	2	2	2
13	2	2	2	2	2	2	2
14	2	2	2	2	2	2	2
15	2	2	2	2	2	2	2
16	2	2	2	2	2	2	2
17	2	2	2	2	2	2	2
18	1	2	2	2	2	2	2
19	1	1	1	1	2	1	2
20	1	1	1	1	1	1	1
21	1	1	1	1	1	1	1
22	1	1	1	1	1	1	1
23	1	1	1	1	1	1	1

WINTER SEAS. DECEMBER 1 THRU February 28

HR/DAY	MON	TUES	WEDS	THUR	FRI	SAT	SUN
0	1	1	1	1	1	1	1
1	1	1	1	1	1	1	1
2	1	1	1	1	1	1	1
3	1	1	1	1	1	1	1
4	1	1	1	1	1	1	1
5	1	1	1	1	1	1	1
6	1	1	1	1	1	1	1
7	1	1	1	1	1	1	1
8	1	1	1	1	1	1	1
9	1	1	1	1	1	1	1
10	1	1	1	1	2	2	1
11	2	1	2	2	2	2	2
12	2	1	2	2	2	2	2
13	2	2	2	2	2	2	2
14	2	2	2	2	2	2	2
15	2	2	2	2	2	2	2
16	2	2	2	2	2	2	2
17	2	2	2	2	2	2	2
18	1	1	1	1	2	1	1
19	1	1	1	1	1	1	1
20	1	1	1	1	1	1	1
21	1	1	1	1	1	1	1
22	1	1	1	1	1	1	1
23	1	1	1	1	1	1	1

NOTES:

1) THE NEW YORK STATE THRUWAY IS A LIMITED ACCESS, HIGH-SPEED, HIGH-VOLUME HIGHWAY. TRAFFIC SHALL BE MAINTAINED IN ACCORDANCE WITH THE *MANUAL ON UNIFORM TRAFFIC CONTROL DEVICES (MUTCD)*, THE *WORK ZONE TRAFFIC CONTROL PLANS*, AND THE *STANDARD SPECIFICATIONS* SECTION 619 AS AMENDED BY THE AUTHORITY.

2) LANE CLOSURES ON THE THRUWAY SHALL ONLY BE ALLOWED IN ACCORDANCE WITH THESE TRAFFIC MANAGEMENT TABLE(S), UNLESS INDICATED OTHERWISE IN THE CONTRACT PLANS OR PROPOSAL DOCUMENTS.

3) LANE CLOSURE CHARTS SHALL APPLY AS FOLLOWS:

- 1,150 VEH/HR/LANE: APPLIES TO ALL WORK REQUIRING LANE CLOSURE(S) EXCEPT AS PERMITTED BELOW.

- 1,300 VEH/HR/LANE: APPLIES TO NON-EVASIVE WORK WHERE WORKERS AND/OR EQUIPMENT ARE LOCATED 4 FT. OR MORE FROM TRAVEL (SPACE) LANE, OR AS APPROVED BY THE THRUWAY PROJECT ENGINEER. WORK SHOULD BE ABLE TO BE IMMEDIATELY STOPPED AND LANE CLOSURE(S) REMOVED IN THE EVENT QUEUES, GREATER THAN 1 MILE, DEVELOP.

NEW YORK STATE OF OPPORTUNITY. Thruway Authority

U.S. CUSTOMARY STANDARD SHEET

LANE CLOSURE CHARTS
1,150 VEHICLES PER HOUR
SYRACUSE DIVISION
(SHEET 7 OF 18)

APPROVED SEPTEMBER 1, 2018

/S/ PATRICK THOMPSON, P.E.
DIRECTOR DESIGN SUPPORT SERVICES BUREAU

ISSUED UNDER DB 18-003

TA 619-32

I-90 WESTBOUND INTERCHANGES 34A TO 35 (1,150 VEH/HR/LANE)

LANES REQUIRED TO BE OPEN BY HOUR AND TIME OF DAY

SPRING SEASON MARCH 1 THRU MAY 20

HR/DAY	MON	TUES	WEDS	THUR	FRI	SAT	SUN
0	1	1	1	1	1	1	1
1	1	1	1	1	1	1	1
2	1	1	1	1	1	1	1
3	1	1	1	1	1	1	1
4	1	1	1	1	1	1	1
5	1	1	1	1	1	1	1
6	1	1	1	1	1	1	1
7	1	1	1	1	1	1	1
8	1	1	1	1	1	1	1
9	1	1	1	1	1	1	1
10	1	1	1	1	1	1	1
11	1	1	1	1	1	1	1
12	1	1	1	1	1	1	1
13	1	1	1	1	2	1	1
14	1	1	1	1	2	1	1
15	1	1	1	2	2	1	2
16	1	1	1	2	2	1	2
17	1	1	1	2	2	1	2
18	1	1	1	1	1	1	1
19	1	1	1	1	1	1	1
20	1	1	1	1	1	1	1
21	1	1	1	1	1	1	1
22	1	1	1	1	1	1	1
23	1	1	1	1	1	1	1

SUMMER SEASON MAY 21 THRU SEPTEMBER 15

HR/DAY	MON	TUES	WEDS	THUR	FRI	SAT	SUN
0	1	1	1	1	1	1	1
1	1	1	1	1	1	1	1
2	1	1	1	1	1	1	1
3	1	1	1	1	1	1	1
4	1	1	1	1	1	1	1
5	1	1	1	1	1	1	1
6	1	1	1	1	1	1	1
7	1	1	1	1	1	1	1
8	1	1	1	1	1	1	1
9	1	1	1	1	1	1	1
10	1	1	1	1	2	2	1
11	2	1	1	1	2	2	2
12	2	1	1	1	2	2	2
13	2	1	1	2	2	2	2
14	2	1	1	2	2	2	2
15	2	2	2	2	2	2	2
16	2	2	2	2	2	2	2
17	2	2	2	2	2	1	2
18	1	1	1	1	2	1	2
19	1	1	1	1	1	1	1
20	1	1	1	1	1	1	1
21	1	1	1	1	1	1	1
22	1	1	1	1	1	1	1
23	1	1	1	1	1	1	1

LANES REQUIRED TO BE OPEN BY HOUR AND TIME OF DAY

FALL SEASON SEPTEMBER 16 THRU November 30

HR/DAY	MON	TUES	WEDS	THUR	FRI	SAT	SUN
0	1	1	1	1	1	1	1
1	1	1	1	1	1	1	1
2	1	1	1	1	1	1	1
3	1	1	1	1	1	1	1
4	1	1	1	1	1	1	1
5	1	1	1	1	1	1	1
6	1	1	1	1	1	1	1
7	1	1	1	1	1	1	1
8	1	1	1	1	1	1	1
9	1	1	1	1	1	1	1
10	1	1	1	1	1	1	1
11	1	1	1	1	1	2	2
12	1	1	1	1	1	2	2
13	1	1	1	1	2	2	2
14	2	1	1	1	2	2	2
15	2	2	2	2	2	1	2
16	2	2	2	2	2	1	2
17	2	2	2	2	2	1	2
18	1	1	1	1	2	1	2
19	1	1	1	1	1	1	1
20	1	1	1	1	1	1	1
21	1	1	1	1	1	1	1
22	1	1	1	1	1	1	1
23	1	1	1	1	1	1	1

WINTER SEAS. DECEMBER 1 THRU February 28

HR/DAY	MON	TUES	WEDS	THUR	FRI	SAT	SUN
0	1	1	1	1	1	1	1
1	1	1	1	1	1	1	1
2	1	1	1	1	1	1	1
3	1	1	1	1	1	1	1
4	1	1	1	1	1	1	1
5	1	1	1	1	1	1	1
6	1	1	1	1	1	1	1
7	1	1	1	1	1	1	1
8	1	1	1	1	1	1	1
9	1	1	1	1	1	1	1
10	1	1	1	1	1	1	1
11	1	1	1	1	1	1	1
12	1	1	1	1	1	1	1
13	1	1	1	1	1	1	1
14	1	1	1	1	2	1	1
15	1	1	1	1	2	1	1
16	1	1	1	1	2	1	1
17	1	1	1	1	2	1	1
18	1	1	1	1	1	1	1
19	1	1	1	1	1	1	1
20	1	1	1	1	1	1	1
21	1	1	1	1	1	1	1
22	1	1	1	1	1	1	1
23	1	1	1	1	1	1	1

I-90 EASTBOUND INTERCHANGES 35 TO 34A (1,150 VEH/HR/LANE)

LANES REQUIRED TO BE OPEN BY HOUR AND TIME OF DAY

SPRING SEASON MARCH 1 THRU MAY 20

HR/DAY	MON	TUES	WEDS	THUR	FRI	SAT	SUN
0	1	1	1	1	1	1	1
1	1	1	1	1	1	1	1
2	1	1	1	1	1	1	1
3	1	1	1	1	1	1	1
4	1	1	1	1	1	1	1
5	1	1	1	1	1	1	1
6	1	1	1	1	1	1	1
7	1	1	1	1	1	1	1
8	1	1	1	1	1	1	1
9	1	1	1	1	1	1	1
10	1	1	1	1	1	1	1
11	1	1	1	1	2	1	1
12	1	1	1	1	2	1	1
13	1	1	1	1	2	1	1
14	1	1	1	1	2	1	2
15	1	1	2	2	2	1	2
16	1	1	2	2	2	1	2
17	1	1	2	2	2	1	2
18	1	1	1	1	2	1	1
19	1	1	1	1	1	1	1
20	1	1	1	1	1	1	1
21	1	1	1	1	1	1	1
22	1	1	1	1	1	1	1
23	1	1	1	1	1	1	1

SUMMER SEASON MAY 21 THRU SEPTEMBER 15

HR/DAY	MON	TUES	WEDS	THUR	FRI	SAT	SUN
0	1	1	1	1	1	1	1
1	1	1	1	1	1	1	1
2	1	1	1	1	1	1	1
3	1	1	1	1	1	1	1
4	1	1	1	1	1	1	1
5	1	1	1	1	1	1	1
6	1	1	1	1	1	1	1
7	1	1	1	1	1	1	1
8	1	1	1	1	1	1	1
9	1	1	1	1	2	2	1
10	1	1	1	2	2	2	2
11	2	1	1	2	2	2	2
12	2	1	1	2	2	2	2
13	2	1	1	2	2	2	2
14	2	1	2	2	2	2	2
15	2	2	2	2	2	2	2
16	2	2	2	2	2	2	2
17	2	2	2	2	2	1	2
18	1	1	1	2	2	1	2
19	1	1	1	1	1	1	1
20	1	1	1	1	1	1	1
21	1	1	1	1	1	1	1
22	1	1	1	1	1	1	1
23	1	1	1	1	1	1	1

LANES REQUIRED TO BE OPEN BY HOUR AND TIME OF DAY

FALL SEASON SEPTEMBER 16 THRU November 30

HR/DAY	MON	TUES	WEDS	THUR	FRI	SAT	SUN
0	1	1	1	1	1	1	1
1	1	1	1	1	1	1	1
2	1	1	1	1	1	1	1
3	1	1	1	1	1	1	1
4	1	1	1	1	1	1	1
5	1	1	1	1	1	1	1
6	1	1	1	1	1	1	1
7	1	1	1	1	1	1	1
8	1	1	1	1	1	1	1
9	1	1	1	1	1	1	1
10	1	1	1	1	2	1	1
11	1	1	1	1	2	1	2
12	1	1	1	1	2	1	2
13	1	1	1	1	2	1	2
14	1	1	2	1	2	1	2
15	2	2	2	2	2	1	2
16	2	2	2	2	2	1	2
17	2	2	2	2	2	1	2
18	1	1	1	1	2	1	2
19	1	1	1	1	1	1	1
20	1	1	1	1	1	1	1
21	1	1	1	1	1	1	1
22	1	1	1	1	1	1	1
23	1	1	1	1	1	1	1

WINTER SEAS. DECEMBER 1 THRU February 28

HR/DAY	MON	TUES	WEDS	THUR	FRI	SAT	SUN
0	1	1	1	1	1	1	1
1	1	1	1	1	1	1	1
2	1	1	1	1	1	1	1
3	1	1	1	1	1	1	1
4	1	1	1	1	1	1	1
5	1	1	1	1	1	1	1
6	1	1	1	1	1	1	1
7	1	1	1	1	1	1	1
8	1	1	1	1	1	1	1
9	1	1	1	1	1	1	1
10	1	1	1	1	1	1	1
11	1	1	1	1	1	1	1
12	1	1	1	1	1	1	1
13	1	1	1	1	1	1	1
14	1	1	1	1	2	1	1
15	1	1	1	1	2	1	1
16	1	1	1	1	2	1	1
17	1	1	1	1	2	1	1
18	1	1	1	1	1	1	1
19	1	1	1	1	1	1	1
20	1	1	1	1	1	1	1
21	1	1	1	1	1	1	1
22	1	1	1	1	1	1	1
23	1	1	1	1	1	1	1

NOTES:

1) THE NEW YORK STATE THRUWAY IS A LIMITED ACCESS, HIGH-SPEED, HIGH-VOLUME HIGHWAY. TRAFFIC SHALL BE MAINTAINED IN ACCORDANCE WITH THE *MANUAL ON UNIFORM TRAFFIC CONTROL DEVICES (MUTCD)*, THE *WORK ZONE TRAFFIC CONTROL PLANS*, AND THE *STANDARD SPECIFICATIONS* SECTION 619 AS AMENDED BY THE AUTHORITY.

2) LANE CLOSURES ON THE THRUWAY SHALL ONLY BE ALLOWED IN ACCORDANCE WITH THESE TRAFFIC MANAGEMENT TABLE(S), UNLESS INDICATED OTHERWISE IN THE CONTRACT PLANS OR PROPOSAL DOCUMENTS.

3) LANE CLOSURE CHARTS SHALL APPLY AS FOLLOWS:

- 1,150 VEH/HR/LANE: APPLIES TO ALL WORK REQUIRING LANE CLOSURE(S) EXCEPT AS PERMITTED BELOW.

- 1,300 VEH/HR/LANE: APPLIES TO NON-EVASIVE WORK WHERE WORKERS AND/OR EQUIPMENT ARE LOCATED 4 FT. OR MORE FROM TRAVEL (SPACE) LANE, OR AS APPROVED BY THE THRUWAY PROJECT ENGINEER. WORK SHOULD BE ABLE TO BE IMMEDIATELY STOPPED AND LANE CLOSURE(S) REMOVED IN THE EVENT QUEUES, GREATER THAN 1 MILE, DEVELOP.

NEW YORK STATE OF OPPORTUNITY. Thruway Authority

U.S. CUSTOMARY STANDARD SHEET

LANE CLOSURE CHARTS
1,150 VEHICLES PER HOUR
SYRACUSE DIVISION
(SHEET 8 OF 18)

APPROVED SEPTEMBER 1, 2018

/S/ PATRICK THOMPSON, P.E.
DIRECTOR DESIGN SUPPORT
SERVICES BUREAU

ISSUED UNDER DB 18-003

TA 619-32

I-90 WESTBOUND INTERCHANGES 35 TO 36 (1,150 VEH/HR/LANE)

LANES REQUIRED TO BE OPEN BY HOUR AND TIME OF DAY

SPRING SEASON MARCH 1 THRU MAY 20

HR/DAY	MON	TUES	WEDS	THUR	FRI	SAT	SUN
0	1	1	1	1	1	1	1
1	1	1	1	1	1	1	1
2	1	1	1	1	1	1	1
3	1	1	1	1	1	1	1
4	1	1	1	1	1	1	1
5	1	1	1	1	1	1	1
6	1	1	1	1	1	1	1
7	1	1	1	1	1	1	1
8	1	1	1	1	1	1	1
9	1	1	1	1	1	1	1
10	1	1	1	1	1	1	1
11	1	1	1	1	2	1	1
12	1	1	1	1	2	1	1
13	1	1	1	1	2	1	1
14	2	1	1	2	2	1	1
15	2	2	2	2	2	1	2
16	2	2	2	2	2	1	2
17	2	2	2	2	2	1	2
18	1	1	1	1	2	1	1
19	1	1	1	1	1	1	1
20	1	1	1	1	1	1	1
21	1	1	1	1	1	1	1
22	1	1	1	1	1	1	1
23	1	1	1	1	1	1	1

SUMMER SEASON MAY 21 THRU SEPTEMBER 15

HR/DAY	MON	TUES	WEDS	THUR	FRI	SAT	SUN
0	1	1	1	1	1	1	1
1	1	1	1	1	1	1	1
2	1	1	1	1	1	1	1
3	1	1	1	1	1	1	1
4	1	1	1	1	1	1	1
5	1	1	1	1	1	1	1
6	1	1	1	1	1	1	1
7	1	1	1	1	1	1	1
8	1	1	1	1	1	1	1
9	1	1	1	1	2	1	1
10	2	1	1	2	2	2	2
11	2	2	2	2	2	2	2
12	2	2	2	2	2	2	2
13	2	2	2	2	2	2	2
14	2	2	2	2	2	2	2
15	2	2	2	2	2	2	2
16	2	2	2	2	2	2	2
17	2	2	2	2	2	1	2
18	1	1	2	2	2	1	2
19	1	1	1	1	1	1	1
20	1	1	1	1	1	1	1
21	1	1	1	1	1	1	1
22	1	1	1	1	1	1	1
23	1	1	1	1	1	1	1

LANES REQUIRED TO BE OPEN BY HOUR AND TIME OF DAY

FALL SEASON SEPTEMBER 16 THRU November 30

HR/DAY	MON	TUES	WEDS	THUR	FRI	SAT	SUN
0	1	1	1	1	1	1	1
1	1	1	1	1	1	1	1
2	1	1	1	1	1	1	1
3	1	1	1	1	1	1	1
4	1	1	1	1	1	1	1
5	1	1	1	1	1	1	1
6	1	1	1	1	1	1	1
7	1	1	1	1	1	1	1
8	1	1	1	1	1	1	1
9	1	1	1	1	1	1	1
10	1	1	1	1	1	2	1
11	1	1	1	1	2	2	2
12	1	1	1	1	2	2	2
13	2	1	2	1	2	2	2
14	2	2	2	2	2	2	2
15	2	2	2	2	2	1	2
16	2	2	2	2	2	1	2
17	2	2	2	2	2	1	2
18	1	1	1	1	2	1	1
19	1	1	1	1	1	1	1
20	1	1	1	1	1	1	1
21	1	1	1	1	1	1	1
22	1	1	1	1	1	1	1
23	1	1	1	1	1	1	1

WINTER SEAS. DECEMBER 1 THRU February 28

HR/DAY	MON	TUES	WEDS	THUR	FRI	SAT	SUN
0	1	1	1	1	1	1	1
1	1	1	1	1	1	1	1
2	1	1	1	1	1	1	1
3	1	1	1	1	1	1	1
4	1	1	1	1	1	1	1
5	1	1	1	1	1	1	1
6	1	1	1	1	1	1	1
7	1	1	1	1	1	1	1
8	1	1	1	1	1	1	1
9	1	1	1	1	1	1	1
10	1	1	1	1	1	1	1
11	1	1	1	1	1	1	1
12	1	1	1	1	1	1	1
13	1	1	1	1	2	1	1
14	1	1	1	1	2	1	1
15	2	2	2	2	2	1	1
16	2	2	2	2	2	1	1
17	2	2	2	2	2	1	1
18	1	1	1	1	1	1	1
19	1	1	1	1	1	1	1
20	1	1	1	1	1	1	1
21	1	1	1	1	1	1	1
22	1	1	1	1	1	1	1
23	1	1	1	1	1	1	1

I-90 EASTBOUND INTERCHANGES 36 TO 35 (1,150 VEH/HR/LANE)

LANES REQUIRED TO BE OPEN BY HOUR AND TIME OF DAY

SPRING SEASON MARCH 1 THRU MAY 20

HR/DAY	MON	TUES	WEDS	THUR	FRI	SAT	SUN
0	1	1	1	1	1	1	1
1	1	1	1	1	1	1	1
2	1	1	1	1	1	1	1
3	1	1	1	1	1	1	1
4	1	1	1	1	1	1	1
5	1	1	1	1	1	1	1
6	1	1	1	1	1	1	1
7	2	2	2	2	2	1	1
8	2	2	2	2	2	1	1
9	1	1	1	1	2	1	1
10	1	1	1	1	2	1	1
11	1	1	1	1	2	1	1
12	1	1	1	1	2	1	1
13	1	1	1	1	2	1	2
14	1	1	1	2	2	1	2
15	2	1	2	2	2	1	2
16	2	2	2	2	2	1	2
17	2	2	2	2	2	1	2
18	1	1	1	1	2	1	1
19	1	1	1	1	1	1	1
20	1	1	1	1	1	1	1
21	1	1	1	1	1	1	1
22	1	1	1	1	1	1	1
23	1	1	1	1	1	1	1

SUMMER SEASON MAY 21 THRU SEPTEMBER 15

HR/DAY	MON	TUES	WEDS	THUR	FRI	SAT	SUN
0	1	1	1	1	1	1	1
1	1	1	1	1	1	1	1
2	1	1	1	1	1	1	1
3	1	1	1	1	1	1	1
4	1	1	1	1	1	1	1
5	1	1	1	1	1	1	1
6	1	1	1	1	1	1	1
7	2	2	2	2	2	1	1
8	2	2	2	2	2	1	1
9	2	1	1	2	2	1	1
10	2	1	1	2	2	2	2
11	2	1	1	2	2	2	2
12	2	1	1	2	2	2	2
13	2	1	1	2	2	2	2
14	2	1	2	2	2	2	2
15	2	2	2	2	2	2	2
16	2	2	2	2	2	2	2
17	2	2	2	2	2	2	2
18	1	1	1	2	2	2	2
19	1	1	1	1	2	1	1
20	1	1	1	1	1	1	1
21	1	1	1	1	1	1	1
22	1	1	1	1	1	1	1
23	1	1	1	1	1	1	1

LANES REQUIRED TO BE OPEN BY HOUR AND TIME OF DAY

FALL SEASON SEPTEMBER 16 THRU November 30

HR/DAY	MON	TUES	WEDS	THUR	FRI	SAT	SUN
0	1	1	1	1	1	1	1
1	1	1	1	1	1	1	1
2	1	1	1	1	1	1	1
3	1	1	1	1	1	1	1
4	1	1	1	1	1	1	1
5	1	1	1	1	1	1	1
6	1	1	1	1	1	1	1
7	2	2	2	2	2	1	1
8	2	2	2	2	2	1	1
9	2	1	1	1	2	1	1
10	2	1	1	1	2	1	2
11	2	1	2	1	2	1	2
12	2	1	2	1	2	1	2
13	2	1	2	1	2	1	2
14	2	2	2	1	2	1	2
15	2	2	2	2	2	1	2
16	2	2	2	2	2	1	2
17	2	2	2	2	2	1	2
18	1	1	1	1	2	1	2
19	1	1	1	1	1	1	1
20	1	1	1	1	1	1	1
21	1	1	1	1	1	1	1
22	1	1	1	1	1	1	1
23	1	1	1	1	1	1	1

WINTER SEAS. DECEMBER 1 THRU February 28

HR/DAY	MON	TUES	WEDS	THUR	FRI	SAT	SUN
0	1	1	1	1	1	1	1
1	1	1	1	1	1	1	1
2	1	1	1	1	1	1	1
3	1	1	1	1	1	1	1
4	1	1	1	1	1	1	1
5	1	1	1	1	1	1	1
6	1	1	1	1	1	1	1
7	2	2	2	2	2	1	1
8	2	2	2	2	2	1	1
9	1	1	1	1	1	1	1
10	1	1	1	1	1	1	1
11	1	1	1	1	1	1	1
12	1	1	1	1	1	1	1
13	1	1	1	1	2	1	1
14	1	1	1	1	2	1	1
15	1	1	2	2	2	1	1
16	1	1	2	2	2	1	1
17	1	1	2	2	2	1	1
18	1	1	1	1	1	1	1
19	1	1	1	1	1	1	1
20	1	1	1	1	1	1	1
21	1	1	1	1	1	1	1
22	1	1	1	1	1	1	1
23	1	1	1	1	1	1	1

NOTES:

1) THE NEW YORK STATE THRUWAY IS A LIMITED ACCESS, HIGH-SPEED, HIGH-VOLUME HIGHWAY. TRAFFIC SHALL BE MAINTAINED IN ACCORDANCE WITH THE *MANUAL ON UNIFORM TRAFFIC CONTROL DEVICES (MUTCD)*, THE *WORK ZONE TRAFFIC CONTROL PLANS*, AND THE *STANDARD SPECIFICATIONS* SECTION 619 AS AMENDED BY THE AUTHORITY.

2) LANE CLOSURES ON THE THRUWAY SHALL ONLY BE ALLOWED IN ACCORDANCE WITH THESE TRAFFIC MANAGEMENT TABLE(S), UNLESS INDICATED OTHERWISE IN THE CONTRACT PLANS OR PROPOSAL DOCUMENTS.

3) LANE CLOSURE CHARTS SHALL APPLY AS FOLLOWS:

- 1,150 VEH/HR/LANE: APPLIES TO ALL WORK REQUIRING LANE CLOSURE(S) EXCEPT AS PERMITTED BELOW.

- 1,300 VEH/HR/LANE: APPLIES TO NON-EVASIVE WORK WHERE WORKERS AND/OR EQUIPMENT ARE LOCATED 4 FT. OR MORE FROM TRAVEL (SPACE) LANE, OR AS APPROVED BY THE THRUWAY PROJECT ENGINEER. WORK SHOULD BE ABLE TO BE IMMEDIATELY STOPPED AND LANE CLOSURE(S) REMOVED IN THE EVENT QUEUES, GREATER THAN 1 MILE, DEVELOP.

NEW YORK STATE OF OPPORTUNITY. Thruway Authority

U.S. CUSTOMARY STANDARD SHEET

LANE CLOSURE CHARTS
1,150 VEHICLES PER HOUR
SYRACUSE DIVISION
(SHEET 9 OF 18)

APPROVED SEPTEMBER 1, 2018

/S/ PATRICK THOMPSON, P.E.
DIRECTOR DESIGN SUPPORT SERVICES BUREAU

ISSUED UNDER DB 18-003

TA 619-32

I-90 WESTBOUND INTERCHANGES 36 TO 37 (1,150 VEH/HR/LANE)

LANES REQUIRED TO BE OPEN BY HOUR AND TIME OF DAY

SPRING SEASON MARCH 1 THRU MAY 20

HR/DAY	MON	TUES	WEDS	THUR	FRI	SAT	SUN
0	1	1	1	1	1	1	1
1	1	1	1	1	1	1	1
2	1	1	1	1	1	1	1
3	1	1	1	1	1	1	1
4	1	1	1	1	1	1	1
5	1	1	1	1	1	1	1
6	1	1	1	1	1	1	1
7	2	1	1	1	1	1	1
8	2	1	1	1	1	1	1
9	1	1	1	1	1	1	1
10	1	1	1	1	2	2	1
11	2	1	1	1	2	2	2
12	2	1	1	1	2	2	2
13	2	1	1	2	2	2	2
14	2	2	2	2	2	2	2
15	2	2	2	2	2	1	2
16	2	2	2	2	2	1	2
17	2	2	2	2	2	1	2
18	2	1	2	2	2	1	2
19	1	1	1	1	1	1	2
20	1	1	1	1	1	1	1
21	1	1	1	1	1	1	1
22	1	1	1	1	1	1	1
23	1	1	1	1	1	1	1

SUMMER SEASON MAY 21 THRU SEPTEMBER 15

HR/DAY	MON	TUES	WEDS	THUR	FRI	SAT	SUN
0	1	1	1	1	1	1	1
1	1	1	1	1	1	1	1
2	1	1	1	1	1	1	1
3	1	1	1	1	1	1	1
4	1	1	1	1	1	1	1
5	1	1	1	1	1	1	1
6	1	1	1	1	1	1	1
7	2	2	2	2	2	1	1
8	2	2	2	2	2	1	1
9	2	2	2	2	2	2	1
10	2	2	2	2	2	2	2
11	2	2	2	2	2	2	2
12	2	2	2	2	2	2	2
13	2	2	2	2	2	2	2
14	2	2	2	2	2	2	2
15	2	2	2	2	2	2	2
16	2	2	2	2	2	2	2
17	2	2	2	2	2	2	2
18	2	2	2	2	2	2	2
19	1	1	1	2	2	1	2
20	1	1	1	1	1	1	2
21	1	1	1	1	1	1	1
22	1	1	1	1	1	1	1
23	1	1	1	1	1	1	1

LANES REQUIRED TO BE OPEN BY HOUR AND TIME OF DAY

FALL SEASON SEPTEMBER 16 THRU November 30

HR/DAY	MON	TUES	WEDS	THUR	FRI	SAT	SUN
0	1	1	1	1	1	1	1
1	1	1	1	1	1	1	1
2	1	1	1	1	1	1	1
3	1	1	1	1	1	1	1
4	1	1	1	1	1	1	1
5	1	1	1	1	1	1	1
6	1	1	1	1	1	1	1
7	2	2	2	2	2	1	1
8	1	1	1	2	2	1	1
9	1	1	1	1	2	2	1
10	2	1	2	2	2	2	2
11	2	1	2	2	2	2	2
12	2	2	2	2	2	2	2
13	2	2	2	2	2	2	2
14	2	2	2	2	2	2	2
15	2	2	2	2	2	2	2
16	2	2	2	2	2	2	2
17	2	2	2	2	2	2	2
18	2	2	2	2	2	1	2
19	1	1	1	1	2	1	2
20	1	1	1	1	1	1	1
21	1	1	1	1	1	1	1
22	1	1	1	1	1	1	1
23	1	1	1	1	1	1	1

WINTER SEAS. DECEMBER 1 THRU February 28

HR/DAY	MON	TUES	WEDS	THUR	FRI	SAT	SUN
0	1	1	1	1	1	1	1
1	1	1	1	1	1	1	1
2	1	1	1	1	1	1	1
3	1	1	1	1	1	1	1
4	1	1	1	1	1	1	1
5	1	1	1	1	1	1	1
6	1	1	1	1	1	1	1
7	1	1	1	1	1	1	1
8	1	1	1	1	1	1	1
9	1	1	1	1	1	1	1
10	1	1	1	1	1	1	1
11	1	1	1	1	2	2	1
12	1	1	2	1	2	2	2
13	2	2	2	2	2	2	2
14	2	2	2	2	2	2	2
15	2	2	2	2	2	1	2
16	2	2	2	2	2	1	2
17	2	2	2	2	2	1	1
18	1	1	1	1	2	1	1
19	1	1	1	1	1	1	1
20	1	1	1	1	1	1	1
21	1	1	1	1	1	1	1
22	1	1	1	1	1	1	1
23	1	1	1	1	1	1	1

I-90 EASTBOUND INTERCHANGES 37 TO 36 (1,150 VEH/HR/LANE)

LANES REQUIRED TO BE OPEN BY HOUR AND TIME OF DAY

SPRING SEASON MARCH 1 THRU MAY 20

HR/DAY	MON	TUES	WEDS	THUR	FRI	SAT	SUN
0	1	1	1	1	1	1	1
1	1	1	1	1	1	1	1
2	1	1	1	1	1	1	1
3	1	1	1	1	1	1	1
4	1	1	1	1	1	1	1
5	1	1	1	1	1	1	1
6	2	1	1	1	1	1	1
7	2	2	2	2	2	1	1
8	2	2	2	2	2	1	1
9	2	2	2	2	2	1	1
10	2	1	1	2	2	2	1
11	2	1	1	2	2	2	2
12	2	1	1	2	2	2	2
13	2	1	1	2	2	2	2
14	2	1	1	2	2	2	2
15	2	2	2	2	2	2	2
16	2	2	2	2	2	2	2
17	2	2	2	2	2	1	2
18	1	1	1	2	2	1	2
19	1	1	1	1	2	1	1
20	1	1	1	1	1	1	1
21	1	1	1	1	1	1	1
22	1	1	1	1	1	1	1
23	1	1	1	1	1	1	1

SUMMER SEASON MAY 21 THRU SEPTEMBER 15

HR/DAY	MON	TUES	WEDS	THUR	FRI	SAT	SUN
0	1	1	1	1	1	1	1
1	1	1	1	1	1	1	1
2	1	1	1	1	1	1	1
3	1	1	1	1	1	1	1
4	1	1	1	1	1	1	1
5	1	1	1	1	1	1	1
6	2	1	1	1	2	1	1
7	2	2	2	2	2	1	1
8	2	2	2	2	2	2	1
9	2	2	2	2	2	2	2
10	2	2	2	2	2	2	2
11	2	2	2	2	2	2	2
12	2	2	2	2	2	2	2
13	2	2	2	2	2	2	2
14	2	2	2	2	2	2	2
15	2	2	2	2	2	2	2
16	2	2	2	2	2	2	2
17	2	2	2	2	2	2	2
18	2	2	2	2	2	2	2
19	1	1	1	2	2	1	2
20	1	1	1	1	1	1	1
21	1	1	1	1	1	1	1
22	1	1	1	1	1	1	1
23	1	1	1	1	1	1	1

LANES REQUIRED TO BE OPEN BY HOUR AND TIME OF DAY

FALL SEASON SEPTEMBER 16 THRU November 30

HR/DAY	MON	TUES	WEDS	THUR	FRI	SAT	SUN
0	1	1	1	1	1	1	1
1	1	1	1	1	1	1	1
2	1	1	1	1	1	1	1
3	1	1	1	1	1	1	1
4	1	1	1	1	1	1	1
5	1	1	1	1	1	1	1
6	2	1	1	2	2	1	1
7	2	2	2	2	2	1	1
8	2	2	2	2	2	1	1
9	2	2	2	2	2	2	1
10	2	2	2	2	2	2	2
11	2	2	2	2	2	2	2
12	2	2	2	2	2	2	2
13	2	2	2	2	2	2	2
14	2	2	2	2	2	2	2
15	2	2	2	2	2	2	2
16	2	2	2	2	2	2	2
17	2	2	2	2	2	2	2
18	1	2	2	2	2	1	2
19	1	1	1	1	2	1	2
20	1	1	1	1	1	1	1
21	1	1	1	1	1	1	1
22	1	1	1	1	1	1	1
23	1	1	1	1	1	1	1

WINTER SEAS. DECEMBER 1 THRU February 28

HR/DAY	MON	TUES	WEDS	THUR	FRI	SAT	SUN
0	1	1	1	1	1	1	1
1	1	1	1	1	1	1	1
2	1	1	1	1	1	1	1
3	1	1	1	1	1	1	1
4	1	1	1	1	1	1	1
5	1	1	1	1	1	1	1
6	1	1	1	1	1	1	1
7	2	2	2	2	2	1	1
8	2	2	2	2	2	1	1
9	1	2	2	1	1	1	1
10	1	1	2	1	2	1	1
11	2	1	2	1	2	2	2
12	2	1	2	1	2	2	2
13	2	2	2	2	2	2	2
14	2	2	2	2	2	1	2
15	2	2	2	2	2	1	2
16	2	2	2	2	2	1	1
17	2	2	2	2	2	1	1
18	1	1	1	1	2	1	1
19	1	1	1	1	1	1	1
20	1	1	1	1	1	1	1
21	1	1	1	1	1	1	1
22	1	1	1	1	1	1	1
23	1	1	1	1	1	1	1

NOTES:

1) THE NEW YORK STATE THRUWAY IS A LIMITED ACCESS, HIGH-SPEED, HIGH-VOLUME HIGHWAY. TRAFFIC SHALL BE MAINTAINED IN ACCORDANCE WITH THE *MANUAL ON UNIFORM TRAFFIC CONTROL DEVICES (MUTCD)*, THE *WORK ZONE TRAFFIC CONTROL PLANS*, AND THE *STANDARD SPECIFICATIONS* SECTION 619 AS AMENDED BY THE AUTHORITY.

2) LANE CLOSURES ON THE THRUWAY SHALL ONLY BE ALLOWED IN ACCORDANCE WITH THESE TRAFFIC MANAGEMENT TABLE(S), UNLESS INDICATED OTHERWISE IN THE CONTRACT PLANS OR PROPOSAL DOCUMENTS.

3) LANE CLOSURE CHARTS SHALL APPLY AS FOLLOWS:

- 1,150 VEH/HR/LANE: APPLIES TO ALL WORK REQUIRING LANE CLOSURE(S) EXCEPT AS PERMITTED BELOW.

- 1,300 VEH/HR/LANE: APPLIES TO NON-EVASIVE WORK WHERE WORKERS AND/OR EQUIPMENT ARE LOCATED 4 FT. OR MORE FROM TRAVEL (SPACE) LANE, OR AS APPROVED BY THE THRUWAY PROJECT ENGINEER. WORK SHOULD BE ABLE TO BE IMMEDIATELY STOPPED AND LANE CLOSURE(S) REMOVED IN THE EVENT QUEUES, GREATER THAN 1 MILE, DEVELOP.

NEW YORK STATE OF OPPORTUNITY. Thruway Authority

U.S. CUSTOMARY STANDARD SHEET

LANE CLOSURE CHARTS
1,150 VEHICLES PER HOUR
SYRACUSE DIVISION
(SHEET 10 OF 18)

APPROVED SEPTEMBER 1, 2018

/S/ PATRICK THOMPSON, P.E.
DIRECTOR DESIGN SUPPORT SERVICES BUREAU

ISSUED UNDER DB 18-003

TA 619-32

I-90 WESTBOUND INTERCHANGES 37 TO 38 (1,150 VEH/HR/LANE)

LANES REQUIRED TO BE OPEN BY HOUR AND TIME OF DAY

SPRING SEASON MARCH 1 THRU MAY 20

HR/DAY	MON	TUES	WEDS	THUR	FRI	SAT	SUN
0	1	1	1	1	1	1	1
1	1	1	1	1	1	1	1
2	1	1	1	1	1	1	1
3	1	1	1	1	1	1	1
4	1	1	1	1	1	1	1
5	1	1	1	1	1	1	1
6	1	1	1	1	1	1	1
7	1	1	1	1	1	1	1
8	1	1	1	1	1	1	1
9	1	1	1	1	1	2	1
10	1	1	1	1	2	2	1
11	2	1	1	1	2	2	2
12	2	1	1	1	2	2	2
13	2	1	1	2	2	2	2
14	2	2	2	2	2	2	2
15	2	2	2	2	2	1	2
16	2	2	2	2	2	1	2
17	2	2	2	2	2	1	2
18	2	1	2	2	2	1	2
19	1	1	1	1	1	1	2
20	1	1	1	1	1	1	1
21	1	1	1	1	1	1	1
22	1	1	1	1	1	1	1
23	1	1	1	1	1	1	1

SUMMER SEASON MAY 21 THRU SEPTEMBER 15

HR/DAY	MON	TUES	WEDS	THUR	FRI	SAT	SUN
0	1	1	1	1	1	1	1
1	1	1	1	1	1	1	1
2	1	1	1	1	1	1	1
3	1	1	1	1	1	1	1
4	1	1	1	1	1	1	1
5	1	1	1	1	1	1	1
6	1	1	1	1	1	1	1
7	1	1	1	1	1	1	1
8	1	1	1	2	2	1	1
9	2	1	2	2	2	2	2
10	2	2	2	2	2	2	2
11	2	2	2	2	2	2	2
12	2	2	2	2	2	2	2
13	2	2	2	2	2	2	2
14	2	2	2	2	2	2	2
15	2	2	2	2	2	2	2
16	2	2	2	2	2	2	2
17	2	2	2	2	2	2	2
18	2	2	2	2	2	2	2
19	1	1	1	1	2	1	2
20	1	1	1	1	1	1	2
21	1	1	1	1	1	1	1
22	1	1	1	1	1	1	1
23	1	1	1	1	1	1	1

LANES REQUIRED TO BE OPEN BY HOUR AND TIME OF DAY

FALL SEASON SEPTEMBER 16 THRU November 30

HR/DAY	MON	TUES	WEDS	THUR	FRI	SAT	SUN
0	1	1	1	1	1	1	1
1	1	1	1	1	1	1	1
2	1	1	1	1	1	1	1
3	1	1	1	1	1	1	1
4	1	1	1	1	1	1	1
5	1	1	1	1	1	1	1
6	1	1	1	1	1	1	1
7	1	1	1	1	1	1	1
8	1	1	1	1	1	1	1
9	1	1	1	1	1	2	1
10	1	1	1	2	2	2	2
11	2	1	2	2	2	2	2
12	2	1	2	2	2	2	2
13	2	2	2	2	2	2	2
14	2	2	2	2	2	2	2
15	2	2	2	2	2	2	2
16	2	2	2	2	2	2	2
17	2	2	2	2	2	1	2
18	2	2	2	2	2	1	2
19	1	1	1	1	2	1	2
20	1	1	1	1	1	1	1
21	1	1	1	1	1	1	1
22	1	1	1	1	1	1	1
23	1	1	1	1	1	1	1

WINTER SEAS. DECEMBER 1 THRU February 28

HR/DAY	MON	TUES	WEDS	THUR	FRI	SAT	SUN
0	1	1	1	1	1	1	1
1	1	1	1	1	1	1	1
2	1	1	1	1	1	1	1
3	1	1	1	1	1	1	1
4	1	1	1	1	1	1	1
5	1	1	1	1	1	1	1
6	1	1	1	1	1	1	1
7	1	1	1	1	1	1	1
8	1	1	1	1	1	1	1
9	1	1	1	1	1	1	1
10	1	1	1	1	1	1	1
11	1	1	1	1	2	2	1
12	1	1	2	1	2	2	2
13	1	1	2	1	2	2	2
14	2	2	2	2	2	2	2
15	2	2	2	2	2	2	2
16	2	2	2	2	2	1	2
17	2	2	2	2	2	1	1
18	1	1	1	1	2	1	1
19	1	1	1	1	1	1	1
20	1	1	1	1	1	1	1
21	1	1	1	1	1	1	1
22	1	1	1	1	1	1	1
23	1	1	1	1	1	1	1

I-90 EASTBOUND INTERCHANGES 38 TO 37(1,150 VEH/HR/LANE)

LANES REQUIRED TO BE OPEN BY HOUR AND TIME OF DAY

SPRING SEASON MARCH 1 THRU MAY 20

HR/DAY	MON	TUES	WEDS	THUR	FRI	SAT	SUN
0	1	1	1	1	1	1	1
1	1	1	1	1	1	1	1
2	1	1	1	1	1	1	1
3	1	1	1	1	1	1	1
4	1	1	1	1	1	1	1
5	1	1	1	1	1	1	1
6	2	1	1	1	1	1	1
7	2	2	2	2	2	1	1
8	2	2	2	2	2	1	1
9	2	1	2	2	2	1	1
10	2	1	1	2	2	2	1
11	2	1	1	2	2	2	2
12	2	1	1	1	2	2	2
13	2	1	1	2	2	2	2
14	2	1	1	2	2	2	2
15	2	2	2	2	2	2	2
16	2	2	2	2	2	2	2
17	2	2	2	2	2	2	2
18	1	1	1	2	2	1	2
19	1	1	1	1	2	1	1
20	1	1	1	1	1	1	1
21	1	1	1	1	1	1	1
22	1	1	1	1	1	1	1
23	1	1	1	1	1	1	1

SUMMER SEASON MAY 21 THRU SEPTEMBER 15

HR/DAY	MON	TUES	WEDS	THUR	FRI	SAT	SUN
0	1	1	1	1	1	1	1
1	1	1	1	1	1	1	1
2	1	1	1	1	1	1	1
3	1	1	1	1	1	1	1
4	1	1	1	1	1	1	1
5	1	1	1	1	1	1	1
6	2	2	2	2	2	1	1
7	2	2	2	2	2	1	1
8	2	2	2	2	2	2	1
9	2	2	2	2	2	2	2
10	2	2	2	2	2	2	2
11	2	2	2	2	2	2	2
12	2	2	2	2	2	2	2
13	2	2	2	2	2	2	2
14	2	2	2	2	2	2	2
15	2	2	2	2	2	2	2
16	2	2	2	2	2	2	2
17	2	2	2	2	2	2	2
18	2	1	2	2	2	2	2
19	1	1	1	2	2	1	2
20	1	1	1	1	1	1	1
21	1	1	1	1	1	1	1
22	1	1	1	1	1	1	1
23	1	1	1	1	1	1	1

LANES REQUIRED TO BE OPEN BY HOUR AND TIME OF DAY

FALL SEASON SEPTEMBER 16 THRU November 30

HR/DAY	MON	TUES	WEDS	THUR	FRI	SAT	SUN
0	1	1	1	1	1	1	1
1	1	1	1	1	1	1	1
2	1	1	1	1	1	1	1
3	1	1	1	1	1	1	1
4	1	1	1	1	1	1	1
5	1	1	1	1	1	1	1
6	2	1	2	2	2	1	1
7	2	2	2	2	2	1	1
8	2	2	2	2	2	1	1
9	2	2	2	2	2	2	1
10	2	2	2	2	2	2	2
11	2	2	2	2	2	2	2
12	2	2	2	2	2	2	2
13	2	2	2	2	2	2	2
14	2	2	2	2	2	2	2
15	2	2	2	2	2	2	2
16	2	2	2	2	2	2	2
17	2	2	2	2	2	2	2
18	1	2	1	1	2	1	2
19	1	1	1	1	2	1	2
20	1	1	1	1	1	1	1
21	1	1	1	1	1	1	1
22	1	1	1	1	1	1	1
23	1	1	1	1	1	1	1

WINTER SEAS. DECEMBER 1 THRU February 28

HR/DAY	MON	TUES	WEDS	THUR	FRI	SAT	SUN
0	1	1	1	1	1	1	1
1	1	1	1	1	1	1	1
2	1	1	1	1	1	1	1
3	1	1	1	1	1	1	1
4	1	1	1	1	1	1	1
5	1	1	1	1	1	1	1
6	1	2	2	2	1	1	1
7	2	2	2	2	2	1	1
8	2	2	2	2	2	1	1
9	1	1	2	1	1	1	1
10	1	1	2	1	2	1	1
11	2	1	2	1	2	2	2
12	2	1	2	1	2	2	2
13	2	1	2	1	2	2	2
14	2	1	2	2	2	1	2
15	2	2	2	2	2	1	2
16	2	2	2	2	2	1	2
17	1	2	2	2	2	1	1
18	1	1	1	1	2	1	1
19	1	1	1	1	1	1	1
20	1	1	1	1	1	1	1
21	1	1	1	1	1	1	1
22	1	1	1	1	1	1	1
23	1	1	1	1	1	1	1

NOTES:

1) THE NEW YORK STATE THRUWAY IS A LIMITED ACCESS, HIGH-SPEED, HIGH-VOLUME HIGHWAY. TRAFFIC SHALL BE MAINTAINED IN ACCORDANCE WITH THE *MANUAL ON UNIFORM TRAFFIC CONTROL DEVICES (MUTCD)*, THE *WORK ZONE TRAFFIC CONTROL PLANS*, AND THE *STANDARD SPECIFICATIONS* SECTION 619 AS AMENDED BY THE AUTHORITY.

2) LANE CLOSURES ON THE THRUWAY SHALL ONLY BE ALLOWED IN ACCORDANCE WITH THESE TRAFFIC MANAGEMENT TABLE(S), UNLESS INDICATED OTHERWISE IN THE CONTRACT PLANS OR PROPOSAL DOCUMENTS.

3) LANE CLOSURE CHARTS SHALL APPLY AS FOLLOWS:

- 1,150 VEH/HR/LANE: APPLIES TO ALL WORK REQUIRING LANE CLOSURE(S) EXCEPT AS PERMITTED BELOW.

- 1,300 VEH/HR/LANE: APPLIES TO NON-EVASIVE WORK WHERE WORKERS AND/OR EQUIPMENT ARE LOCATED 4 FT. OR MORE FROM TRAVEL (SPACE) LANE, OR AS APPROVED BY THE THRUWAY PROJECT ENGINEER. WORK SHOULD BE ABLE TO BE IMMEDIATELY STOPPED AND LANE CLOSURE(S) REMOVED IN THE EVENT QUEUES, GREATER THAN 1 MILE, DEVELOP.

NEW YORK STATE OF OPPORTUNITY. Thruway Authority

U.S. CUSTOMARY STANDARD SHEET

LANE CLOSURE CHARTS
1,150 VEHICLES PER HOUR
SYRACUSE DIVISION
(SHEET 11 OF 18)

APPROVED SEPTEMBER 1, 2018

/S/ PATRICK THOMPSON, P.E.
DIRECTOR DESIGN SUPPORT SERVICES BUREAU

ISSUED UNDER DB 18-003

TA 619-32

I-90 WESTBOUND INTERCHANGES 38 TO 39 (1,150 VEH/HR/LANE)

LANES REQUIRED TO BE OPEN BY HOUR AND TIME OF DAY

SPRING SEASON MARCH 1 THRU MAY 20

HR/DAY	MON	TUES	WEDS	THUR	FRI	SAT	SUN
0	1	1	1	1	1	1	1
1	1	1	1	1	1	1	1
2	1	1	1	1	1	1	1
3	1	1	1	1	1	1	1
4	1	1	1	1	1	1	1
5	1	1	1	1	1	1	1
6	1	1	1	1	1	1	1
7	1	1	1	1	1	1	1
8	1	1	1	1	1	1	1
9	1	1	1	1	1	1	1
10	1	1	1	1	2	2	1
11	1	1	1	1	2	2	2
12	2	1	1	1	2	2	2
13	2	1	1	2	2	1	2
14	2	1	2	2	2	1	2
15	2	2	2	2	2	1	2
16	2	2	2	2	2	1	2
17	2	2	2	2	2	1	2
18	1	1	1	1	2	1	2
19	1	1	1	1	1	1	1
20	1	1	1	1	1	1	1
21	1	1	1	1	1	1	1
22	1	1	1	1	1	1	1
23	1	1	1	1	1	1	1

SUMMER SEASON MAY 21 THRU SEPTEMBER 15

HR/DAY	MON	TUES	WEDS	THUR	FRI	SAT	SUN
0	1	1	1	1	1	1	1
1	1	1	1	1	1	1	1
2	1	1	1	1	1	1	1
3	1	1	1	1	1	1	1
4	1	1	1	1	1	1	1
5	1	1	1	1	1	1	1
6	1	1	1	1	1	1	1
7	1	1	1	1	1	1	1
8	1	1	1	1	1	1	1
9	2	2	2	2	2	2	1
10	2	2	2	2	2	2	2
11	2	2	2	2	2	2	2
12	2	2	2	2	2	2	2
13	2	2	2	2	2	2	2
14	2	2	2	2	2	2	2
15	2	2	2	2	2	2	2
16	2	2	2	2	2	2	2
17	2	2	2	2	2	2	2
18	2	2	2	2	2	1	2
19	1	1	1	1	2	1	2
20	1	1	1	1	1	1	1
21	1	1	1	1	1	1	1
22	1	1	1	1	1	1	1
23	1	1	1	1	1	1	1

LANES REQUIRED TO BE OPEN BY HOUR AND TIME OF DAY

FALL SEASON SEPTEMBER 16 THRU November 30

HR/DAY	MON	TUES	WEDS	THUR	FRI	SAT	SUN
0	1	1	1	1	1	1	1
1	1	1	1	1	1	1	1
2	1	1	1	1	1	1	1
3	1	1	1	1	1	1	1
4	1	1	1	1	1	1	1
5	1	1	1	1	1	1	1
6	1	1	1	1	1	1	1
7	1	1	1	1	1	1	1
8	1	1	1	1	1	1	1
9	1	1	1	1	1	2	1
10	1	1	1	2	2	2	2
11	2	1	2	2	2	2	2
12	2	1	2	2	2	2	2
13	2	2	2	2	2	2	2
14	2	2	2	2	2	2	2
15	2	2	2	2	2	2	2
16	2	2	2	2	2	2	2
17	2	2	2	2	2	1	2
18	1	1	1	1	2	1	2
19	1	1	1	1	1	1	1
20	1	1	1	1	1	1	1
21	1	1	1	1	1	1	1
22	1	1	1	1	1	1	1
23	1	1	1	1	1	1	1

WINTER SEAS. DECEMBER 1 THRU February 28

HR/DAY	MON	TUES	WEDS	THUR	FRI	SAT	SUN
0	1	1	1	1	1	1	1
1	1	1	1	1	1	1	1
2	1	1	1	1	1	1	1
3	1	1	1	1	1	1	1
4	1	1	1	1	1	1	1
5	1	1	1	1	1	1	1
6	1	1	1	1	1	1	1
7	1	1	1	1	1	1	1
8	1	1	1	1	1	1	1
9	1	1	1	1	1	1	1
10	1	1	1	1	1	1	1
11	1	1	1	1	1	1	1
12	1	1	1	1	2	1	1
13	1	1	1	1	2	1	2
14	2	1	2	2	2	1	2
15	2	2	2	2	2	1	2
16	2	2	2	2	2	1	1
17	2	2	2	2	2	1	1
18	1	1	1	1	1	1	1
19	1	1	1	1	1	1	1
20	1	1	1	1	1	1	1
21	1	1	1	1	1	1	1
22	1	1	1	1	1	1	1
23	1	1	1	1	1	1	1

I-90 EASTBOUND INTERCHANGES 39 TO 38 (1,150 VEH/HR/LANE)

LANES REQUIRED TO BE OPEN BY HOUR AND TIME OF DAY

SPRING SEASON MARCH 1 THRU MAY 20

HR/DAY	MON	TUES	WEDS	THUR	FRI	SAT	SUN
0	1	1	1	1	1	1	1
1	1	1	1	1	1	1	1
2	1	1	1	1	1	1	1
3	1	1	1	1	1	1	1
4	1	1	1	1	1	1	1
5	1	1	1	1	1	1	1
6	1	1	1	1	1	1	1
7	2	2	2	2	2	1	1
8	2	2	2	2	2	1	1
9	1	1	1	1	2	1	1
10	1	1	1	1	2	1	1
11	1	1	1	1	2	2	2
12	1	1	1	1	2	2	2
13	1	1	1	1	2	1	2
14	2	1	1	2	2	1	2
15	2	1	1	2	2	1	2
16	2	1	1	2	2	1	2
17	1	1	1	2	2	1	2
18	1	1	1	1	2	1	2
19	1	1	1	1	1	1	1
20	1	1	1	1	1	1	1
21	1	1	1	1	1	1	1
22	1	1	1	1	1	1	1
23	1	1	1	1	1	1	1

SUMMER SEASON MAY 21 THRU SEPTEMBER 15

HR/DAY	MON	TUES	WEDS	THUR	FRI	SAT	SUN
0	1	1	1	1	1	1	1
1	1	1	1	1	1	1	1
2	1	1	1	1	1	1	1
3	1	1	1	1	1	1	1
4	1	1	1	1	1	1	1
5	1	1	1	1	1	1	1
6	2	1	1	1	1	1	1
7	2	2	2	2	2	1	1
8	2	2	2	2	2	2	1
9	2	2	2	2	2	2	2
10	2	2	2	2	2	2	2
11	2	2	2	2	2	2	2
12	2	2	2	2	2	2	2
13	2	2	2	2	2	2	2
14	2	2	2	2	2	2	2
15	2	2	2	2	2	2	2
16	2	2	2	2	2	2	2
17	2	2	2	2	2	2	2
18	2	2	2	2	2	2	2
19	1	1	1	2	2	1	2
20	1	1	1	1	1	1	2
21	1	1	1	1	1	1	1
22	1	1	1	1	1	1	1
23	1	1	1	1	1	1	1

LANES REQUIRED TO BE OPEN BY HOUR AND TIME OF DAY

FALL SEASON SEPTEMBER 16 THRU November 30

HR/DAY	MON	TUES	WEDS	THUR	FRI	SAT	SUN
0	1	1	1	1	1	1	1
1	1	1	1	1	1	1	1
2	1	1	1	1	1	1	1
3	1	1	1	1	1	1	1
4	1	1	1	1	1	1	1
5	1	1	1	1	1	1	1
6	1	1	1	1	1	1	1
7	2	2	2	2	2	1	1
8	2	2	2	2	2	1	1
9	2	2	2	2	2	2	1
10	2	2	2	2	2	2	2
11	2	2	2	2	2	2	2
12	2	2	2	2	2	2	2
13	2	2	2	2	2	2	2
14	2	2	2	2	2	2	2
15	2	2	2	2	2	2	2
16	2	2	2	2	2	2	2
17	2	2	2	2	2	2	2
18	1	2	1	2	2	1	2
19	1	1	1	1	2	1	2
20	1	1	1	1	1	1	1
21	1	1	1	1	1	1	1
22	1	1	1	1	1	1	1
23	1	1	1	1	1	1	1

WINTER SEAS. DECEMBER 1 THRU February 28

HR/DAY	MON	TUES	WEDS	THUR	FRI	SAT	SUN
0	1	1	1	1	1	1	1
1	1	1	1	1	1	1	1
2	1	1	1	1	1	1	1
3	1	1	1	1	1	1	1
4	1	1	1	1	1	1	1
5	1	1	1	1	1	1	1
6	1	1	1	1	1	1	1
7	2	2	2	2	2	1	1
8	2	2	2	2	1	1	1
9	1	1	1	1	1	1	1
10	1	1	1	1	1	1	1
11	1	1	1	1	1	2	1
12	1	1	1	1	2	2	2
13	1	1	1	1	2	1	2
14	1	1	1	1	2	1	2
15	1	1	1	1	2	1	1
16	1	1	1	1	2	1	1
17	1	1	1	1	2	1	1
18	1	1	1	1	1	1	1
19	1	1	1	1	1	1	1
20	1	1	1	1	1	1	1
21	1	1	1	1	1	1	1
22	1	1	1	1	1	1	1
23	1	1	1	1	1	1	1

NOTES:

1) THE NEW YORK STATE THRUWAY IS A LIMITED ACCESS, HIGH-SPEED, HIGH-VOLUME HIGHWAY. TRAFFIC SHALL BE MAINTAINED IN ACCORDANCE WITH THE *MANUAL ON UNIFORM TRAFFIC CONTROL DEVICES (MUTCD)*, THE *WORK ZONE TRAFFIC CONTROL PLANS*, AND THE *STANDARD SPECIFICATIONS* SECTION 619 AS AMENDED BY THE AUTHORITY.

2) LANE CLOSURES ON THE THRUWAY SHALL ONLY BE ALLOWED IN ACCORDANCE WITH THESE TRAFFIC MANAGEMENT TABLE(S), UNLESS INDICATED OTHERWISE IN THE CONTRACT PLANS OR PROPOSAL DOCUMENTS.

3) LANE CLOSURE CHARTS SHALL APPLY AS FOLLOWS:

- 1,150 VEH/HR/LANE: APPLIES TO ALL WORK REQUIRING LANE CLOSURE(S) EXCEPT AS PERMITTED BELOW.

- 1,300 VEH/HR/LANE: APPLIES TO NON-EVASIVE WORK WHERE WORKERS AND/OR EQUIPMENT ARE LOCATED 4 FT. OR MORE FROM TRAVEL (SPACE) LANE, OR AS APPROVED BY THE THRUWAY PROJECT ENGINEER. WORK SHOULD BE ABLE TO BE IMMEDIATELY STOPPED AND LANE CLOSURE(S) REMOVED IN THE EVENT QUEUES, GREATER THAN 1 MILE, DEVELOP.

NEW YORK STATE OF OPPORTUNITY. Thruway Authority

U.S. CUSTOMARY STANDARD SHEET

LANE CLOSURE CHARTS
1,150 VEHICLES PER HOUR
SYRACUSE DIVISION
(SHEET 12 OF 18)

APPROVED SEPTEMBER 1, 2018

/S/ PATRICK THOMPSON, P.E.
DIRECTOR DESIGN SUPPORT SERVICES BUREAU

ISSUED UNDER DB 18-003

TA 619-32

I-90 WESTBOUND INTERCHANGES 39 TO 40 (1,150 VEH/HR/LANE)

LANES REQUIRED TO BE OPEN BY HOUR AND TIME OF DAY

SPRING SEASON MARCH 1 THRU MAY 20

HR/DAY	MON	TUES	WEDS	THUR	FRI	SAT	SUN
0	1	1	1	1	1	1	1
1	1	1	1	1	1	1	1
2	1	1	1	1	1	1	1
3	1	1	1	1	1	1	1
4	1	1	1	1	1	1	1
5	1	1	1	1	1	1	1
6	1	1	1	1	1	1	1
7	1	1	1	1	1	1	1
8	1	1	1	1	1	1	1
9	1	1	1	1	2	2	1
10	2	1	1	2	2	2	2
11	2	1	1	2	2	2	2
12	2	1	1	2	2	2	2
13	2	1	2	2	2	2	2
14	2	2	2	2	2	2	2
15	2	2	2	2	2	2	2
16	2	2	2	2	2	2	2
17	2	2	2	2	2	1	2
18	2	1	1	2	2	1	2
19	1	1	1	1	2	1	2
20	1	1	1	1	1	1	1
21	1	1	1	1	1	1	1
22	1	1	1	1	1	1	1
23	1	1	1	1	1	1	1

SUMMER SEASON MAY 21 THRU SEPTEMBER 15

HR/DAY	MON	TUES	WEDS	THUR	FRI	SAT	SUN
0	1	1	1	1	1	1	1
1	1	1	1	1	1	1	1
2	1	1	1	1	1	1	1
3	1	1	1	1	1	1	1
4	1	1	1	1	1	1	1
5	1	1	1	1	1	1	1
6	1	1	1	1	2	1	1
7	1	1	2	2	1	2	1
8	2	2	2	2	2	2	2
9	2	2	2	2	2	2	2
10	2	2	2	2	2	2	2
11	2	2	2	2	2	2	2
12	2	2	2	2	2	2	2
13	2	2	2	2	2	2	2
14	2	2	2	2	2	2	2
15	2	2	2	2	2	2	2
16	2	2	2	2	2	2	2
17	2	2	2	2	2	2	2
18	2	2	2	2	2	2	2
19	2	1	1	2	2	2	2
20	1	1	1	1	2	1	2
21	1	1	1	1	1	1	1
22	1	1	1	1	2	1	1
23	1	1	1	1	1	1	1

LANES REQUIRED TO BE OPEN BY HOUR AND TIME OF DAY

FALL SEASON SEPTEMBER 16 THRU November 30

HR/DAY	MON	TUES	WEDS	THUR	FRI	SAT	SUN
0	1	1	1	1	1	1	1
1	1	1	1	1	1	1	1
2	1	1	1	1	1	1	1
3	1	1	1	1	1	1	1
4	1	1	1	1	1	1	1
5	1	1	1	1	1	1	1
6	1	1	1	1	1	1	1
7	1	1	1	1	1	1	1
8	1	1	1	1	1	2	1
9	1	1	2	2	2	2	1
10	2	2	2	2	2	2	2
11	2	2	2	2	2	2	2
12	2	2	2	2	2	2	2
13	2	2	2	2	2	2	2
14	2	2	2	2	2	2	2
15	2	2	2	2	2	2	2
16	2	2	2	2	2	2	2
17	2	2	2	2	2	2	2
18	2	1	2	2	2	1	2
19	1	1	1	2	2	1	2
20	1	1	1	1	1	1	2
21	1	1	1	1	1	1	1
22	1	1	1	1	1	1	1
23	1	1	1	1	1	1	1

WINTER SEAS. DECEMBER 1 THRU February 28

HR/DAY	MON	TUES	WEDS	THUR	FRI	SAT	SUN
0	1	1	1	1	1	1	1
1	1	1	1	1	1	1	1
2	1	1	1	1	1	1	1
3	1	1	1	1	1	1	1
4	1	1	1	1	1	1	1
5	1	1	1	1	1	1	1
6	1	1	1	1	1	1	1
7	1	1	1	1	1	1	1
8	1	1	1	1	1	1	1
9	1	1	1	1	1	1	1
10	1	1	1	1	2	2	1
11	1	1	1	1	2	2	2
12	2	1	2	1	2	2	2
13	2	2	2	2	2	2	2
14	2	2	2	2	2	2	2
15	2	2	2	2	2	2	2
16	2	2	2	2	2	2	2
17	2	2	2	2	2	1	2
18	1	1	1	1	2	1	1
19	1	1	1	1	1	1	1
20	1	1	1	1	1	1	1
21	1	1	1	1	1	1	1
22	1	1	1	1	1	1	1
23	1	1	1	1	1	1	1

I-90 EASTBOUND INTERCHANGES 40 TO 39 (1,150 VEH/HR/LANE)

LANES REQUIRED TO BE OPEN BY HOUR AND TIME OF DAY

SPRING SEASON MARCH 1 THRU MAY 20

HR/DAY	MON	TUES	WEDS	THUR	FRI	SAT	SUN
0	1	1	1	1	1	1	1
1	1	1	1	1	1	1	1
2	1	1	1	1	1	1	1
3	1	1	1	1	1	1	1
4	1	1	1	1	1	1	1
5	1	1	1	1	1	1	1
6	1	1	1	1	1	1	1
7	2	1	1	2	2	1	1
8	2	1	1	2	2	1	1
9	2	1	1	2	2	2	1
10	2	1	1	2	2	2	2
11	2	1	1	2	2	2	2
12	2	1	1	2	2	2	2
13	2	1	1	2	2	2	2
14	2	1	2	2	2	2	2
15	2	2	2	2	2	2	2
16	2	2	2	2	2	2	2
17	2	2	2	2	2	2	2
18	2	1	1	2	2	2	2
19	1	1	1	1	2	1	2
20	1	1	1	1	1	1	1
21	1	1	1	1	1	1	1
22	1	1	1	1	1	1	1
23	1	1	1	1	1	1	1

SUMMER SEASON MAY 21 THRU SEPTEMBER 15

HR/DAY	MON	TUES	WEDS	THUR	FRI	SAT	SUN
0	1	1	1	1	1	1	1
1	1	1	1	1	1	1	1
2	1	1	1	1	1	1	1
3	1	1	1	1	1	1	1
4	1	1	1	1	1	1	1
5	1	1	1	1	1	1	1
6	1	1	1	1	1	1	1
7	2	2	2	2	2	1	1
8	2	2	2	2	2	2	1
9	2	2	2	2	2	2	2
10	2	2	2	2	2	2	2
11	2	2	2	2	2	2	2
12	2	2	2	2	2	2	2
13	2	2	2	2	2	2	2
14	2	2	2	2	2	2	2
15	2	2	2	2	2	2	2
16	2	2	2	2	2	2	2
17	2	2	2	2	2	2	2
18	2	2	2	2	2	2	2
19	1	1	1	2	2	2	2
20	1	1	1	1	2	1	2
21	1	1	1	1	1	1	1
22	1	1	1	1	1	1	1
23	1	1	1	1	1	1	1

LANES REQUIRED TO BE OPEN BY HOUR AND TIME OF DAY

FALL SEASON SEPTEMBER 16 THRU November 30

HR/DAY	MON	TUES	WEDS	THUR	FRI	SAT	SUN
0	1	1	1	1	1	1	1
1	1	1	1	1	1	1	1
2	1	1	1	1	1	1	1
3	1	1	1	1	1	1	1
4	1	1	1	1	1	1	1
5	1	1	1	1	1	1	1
6	1	1	1	1	1	1	1
7	2	2	2	2	2	1	1
8	2	2	2	2	2	1	1
9	2	2	2	2	2	2	1
10	2	2	2	2	2	2	2
11	2	2	2	2	2	2	2
12	2	2	2	2	2	2	2
13	2	2	2	2	2	2	2
14	2	2	2	2	2	2	2
15	2	2	2	2	2	2	2
16	2	2	2	2	2	2	2
17	2	2	2	2	2	2	2
18	2	2	2	2	2	2	2
19	1	1	1	1	2	1	2
20	1	1	1	1	1	1	2
21	1	1	1	1	1	1	1
22	1	1	1	1	1	1	1
23	1	1	1	1	1	1	1

WINTER SEAS. DECEMBER 1 THRU February 28

HR/DAY	MON	TUES	WEDS	THUR	FRI	SAT	SUN
0	1	1	1	1	1	1	1
1	1	1	1	1	1	1	1
2	1	1	1	1	1	1	1
3	1	1	1	1	1	1	1
4	1	1	1	1	1	1	1
5	1	1	1	1	1	1	1
6	1	1	1	1	1	1	1
7	1	1	1	1	1	1	1
8	1	1	1	1	1	1	1
9	1	1	1	1	1	1	1
10	1	1	2	1	2	2	1
11	2	1	2	1	2	2	2
12	2	1	2	1	2	2	2
13	2	1	2	2	2	2	2
14	2	1	2	2	2	2	2
15	2	2	2	2	2	2	2
16	2	2	2	2	2	2	2
17	2	2	2	2	2	2	2
18	1	1	1	1	2	1	2
19	1	1	1	1	1	1	1
20	1	1	1	1	1	1	1
21	1	1	1	1	1	1	1
22	1	1	1	1	1	1	1
23	1	1	1	1	1	1	1

NOTES:

1) THE NEW YORK STATE THRUWAY IS A LIMITED ACCESS, HIGH-SPEED, HIGH-VOLUME HIGHWAY. TRAFFIC SHALL BE MAINTAINED IN ACCORDANCE WITH THE *MANUAL ON UNIFORM TRAFFIC CONTROL DEVICES (MUTCD)*, THE *WORK ZONE TRAFFIC CONTROL PLANS*, AND THE *STANDARD SPECIFICATIONS* SECTION 619 AS AMENDED BY THE AUTHORITY.

2) LANE CLOSURES ON THE THRUWAY SHALL ONLY BE ALLOWED IN ACCORDANCE WITH THESE TRAFFIC MANAGEMENT TABLE(S), UNLESS INDICATED OTHERWISE IN THE CONTRACT PLANS OR PROPOSAL DOCUMENTS.

3) LANE CLOSURE CHARTS SHALL APPLY AS FOLLOWS:

- 1,150 VEH/HR/LANE: APPLIES TO ALL WORK REQUIRING LANE CLOSURE(S) EXCEPT AS PERMITTED BELOW.

- 1,300 VEH/HR/LANE: APPLIES TO NON-EVASIVE WORK WHERE WORKERS AND/OR EQUIPMENT ARE LOCATED 4 FT. OR MORE FROM TRAVEL (SPACE) LANE, OR AS APPROVED BY THE THRUWAY PROJECT ENGINEER. WORK SHOULD BE ABLE TO BE IMMEDIATELY STOPPED AND LANE CLOSURE(S) REMOVED IN THE EVENT QUEUES, GREATER THAN 1 MILE, DEVELOP.

NEW YORK STATE OF OPPORTUNITY. Thruway Authority

U.S. CUSTOMARY STANDARD SHEET

LANE CLOSURE CHARTS
1,150 VEHICLES PER HOUR
SYRACUSE DIVISION
(SHEET 13 OF 18)

APPROVED SEPTEMBER 1, 2018

/S/ PATRICK THOMPSON, P.E.
DIRECTOR DESIGN SUPPORT SERVICES BUREAU

ISSUED UNDER DB 18-003

TA 619-32

I-90 WESTBOUND INTERCHANGES 40 TO 41 (1,150 VEH/HR/LANE)

LANES REQUIRED TO BE OPEN BY HOUR AND TIME OF DAY

SPRING SEASON MARCH 1 THRU MAY 20

HR/DAY	MON	TUES	WEDS	THUR	FRI	SAT	SUN
0	1	1	1	1	1	1	1
1	1	1	1	1	1	1	1
2	1	1	1	1	1	1	1
3	1	1	1	1	1	1	1
4	1	1	1	1	1	1	1
5	1	1	1	1	1	1	1
6	1	1	1	1	1	1	1
7	1	1	1	1	1	1	1
8	1	1	1	1	1	1	1
9	1	1	1	1	1	2	1
10	1	1	1	1	2	2	1
11	1	1	1	1	2	2	2
12	1	1	1	1	2	2	2
13	2	1	1	1	2	2	2
14	2	1	1	2	2	2	2
15	2	2	2	2	2	2	2
16	2	2	2	2	2	2	2
17	2	1	1	2	2	1	2
18	2	1	1	2	2	1	2
19	1	1	1	1	2	1	2
20	1	1	1	1	1	1	2
21	1	1	1	1	1	1	1
22	1	1	1	1	1	1	1
23	1	1	1	1	1	1	1

SUMMER SEASON MAY 21 THRU SEPTEMBER 15

HR/DAY	MON	TUES	WEDS	THUR	FRI	SAT	SUN
0	1	1	1	1	1	1	1
1	1	1	1	1	1	1	1
2	1	1	1	1	1	1	1
3	1	1	1	1	1	1	1
4	1	1	1	1	1	1	1
5	1	1	1	1	1	1	1
6	1	1	1	1	1	1	1
7	1	1	1	1	1	1	1
8	1	1	1	1	1	1	1
9	1	1	1	2	2	2	1
10	2	2	2	2	2	2	2
11	2	2	2	2	2	2	2
12	2	2	2	2	2	2	2
13	2	2	2	2	2	2	2
14	2	2	2	2	2	2	2
15	2	2	2	2	2	2	2
16	2	2	2	2	2	2	2
17	2	2	2	2	2	2	2
18	2	1	2	2	2	2	2
19	2	1	1	1	2	2	2
20	1	1	1	1	2	1	2
21	1	1	1	1	1	1	1
22	1	1	1	1	1	1	1
23	1	1	1	1	1	1	1

LANES REQUIRED TO BE OPEN BY HOUR AND TIME OF DAY

FALL SEASON SEPTEMBER 16 THRU November 30

HR/DAY	MON	TUES	WEDS	THUR	FRI	SAT	SUN
0	1	1	1	1	1	1	1
1	1	1	1	1	1	1	1
2	1	1	1	1	1	1	1
3	1	1	1	1	1	1	1
4	1	1	1	1	1	1	1
5	1	1	1	1	1	1	1
6	1	1	1	1	1	1	1
7	1	1	1	1	1	1	1
8	1	1	1	1	1	1	1
9	1	1	1	1	1	2	1
10	1	1	1	2	2	2	2
11	2	1	2	2	2	2	2
12	2	1	2	2	2	2	2
13	2	1	2	2	2	2	2
14	2	2	2	2	2	2	2
15	2	2	2	2	2	2	2
16	2	2	2	2	2	2	2
17	2	2	2	2	2	2	2
18	2	1	2	1	2	1	2
19	1	1	1	1	2	1	2
20	1	1	1	1	1	1	2
21	1	1	1	1	1	1	1
22	1	1	1	1	1	1	1
23	1	1	1	1	1	1	1

WINTER SEAS. DECEMBER 1 THRU February 28

HR/DAY	MON	TUES	WEDS	THUR	FRI	SAT	SUN
0	1	1	1	1	1	1	1
1	1	1	1	1	1	1	1
2	1	1	1	1	1	1	1
3	1	1	1	1	1	1	1
4	1	1	1	1	1	1	1
5	1	1	1	1	1	1	1
6	1	1	1	1	1	1	1
7	1	1	1	1	1	1	1
8	1	1	1	1	1	1	1
9	1	1	1	1	1	1	1
10	1	1	1	1	1	1	1
11	1	1	1	1	2	2	1
12	1	1	1	1	2	2	2
13	2	1	2	1	2	2	2
14	2	2	2	2	2	2	2
15	2	2	2	2	2	2	2
16	2	2	2	2	2	2	2
17	2	1	1	2	2	1	2
18	1	1	1	1	2	1	1
19	1	1	1	1	1	1	1
20	1	1	1	1	1	1	1
21	1	1	1	1	1	1	1
22	1	1	1	1	1	1	1
23	1	1	1	1	1	1	1

I-90 EASTBOUND INTERCHANGES 41 TO 40 (1,150 VEH/HR/LANE)

LANES REQUIRED TO BE OPEN BY HOUR AND TIME OF DAY

SPRING SEASON MARCH 1 THRU MAY 20

HR/DAY	MON	TUES	WEDS	THUR	FRI	SAT	SUN
0	1	1	1	1	1	1	1
1	1	1	1	1	1	1	1
2	1	1	1	1	1	1	1
3	1	1	1	1	1	1	1
4	1	1	1	1	1	1	1
5	1	1	1	1	1	1	1
6	1	1	1	1	1	1	1
7	1	1	1	1	1	1	1
8	1	1	1	1	1	1	1
9	1	1	1	1	2	2	1
10	2	1	1	1	2	2	2
11	2	1	1	1	2	2	2
12	2	1	1	1	2	2	2
13	2	1	1	2	2	2	2
14	2	1	1	2	2	2	2
15	2	1	2	2	2	2	2
16	2	1	2	2	2	2	2
17	2	1	2	2	2	2	2
18	1	1	1	1	2	1	2
19	1	1	1	1	1	1	2
20	1	1	1	1	1	1	1
21	1	1	1	1	1	1	1
22	1	1	1	1	1	1	1
23	1	1	1	1	1	1	1

SUMMER SEASON MAY 21 THRU SEPTEMBER 15

HR/DAY	MON	TUES	WEDS	THUR	FRI	SAT	SUN
0	1	1	1	1	1	1	1
1	1	1	1	1	1	1	1
2	1	1	1	1	1	1	1
3	1	1	1	1	1	1	1
4	1	1	1	1	1	1	1
5	1	1	1	1	1	1	1
6	1	1	1	1	1	1	1
7	1	1	1	1	1	1	1
8	2	1	2	2	2	2	1
9	2	2	2	2	2	2	2
10	2	2	2	2	2	2	2
11	2	2	2	2	2	2	2
12	2	2	2	2	2	2	2
13	2	2	2	2	2	2	2
14	2	2	2	2	2	2	2
15	2	2	2	2	2	2	2
16	2	2	2	2	2	2	2
17	2	2	2	2	2	2	2
18	2	1	2	2	2	2	2
19	1	1	1	2	2	2	2
20	1	1	1	1	2	1	2
21	1	1	1	1	1	1	1
22	1	1	1	1	1	1	1
23	1	1	1	1	1	1	1

LANES REQUIRED TO BE OPEN BY HOUR AND TIME OF DAY

FALL SEASON SEPTEMBER 16 THRU November 30

HR/DAY	MON	TUES	WEDS	THUR	FRI	SAT	SUN
0	1	1	1	1	1	1	1
1	1	1	1	1	1	1	1
2	1	1	1	1	1	1	1
3	1	1	1	1	1	1	1
4	1	1	1	1	1	1	1
5	1	1	1	1	1	1	1
6	1	1	1	1	1	1	1
7	1	1	1	1	1	1	1
8	1	1	2	1	2	1	1
9	2	1	2	2	2	2	2
10	2	2	2	2	2	2	2
11	2	2	2	2	2	2	2
12	2	2	2	2	2	2	2
13	2	2	2	2	2	2	2
14	2	2	2	2	2	2	2
15	2	2	2	2	2	2	2
16	2	2	2	2	2	2	2
17	2	2	2	2	2	2	2
18	1	2	2	1	2	1	2
19	1	1	1	1	2	1	2
20	1	1	1	1	1	1	2
21	1	1	1	1	1	1	1
22	1	1	1	1	1	1	1
23	1	1	1	1	1	1	1

WINTER SEAS. DECEMBER 1 THRU February 28

HR/DAY	MON	TUES	WEDS	THUR	FRI	SAT	SUN
0	1	1	1	1	1	1	1
1	1	1	1	1	1	1	1
2	1	1	1	1	1	1	1
3	1	1	1	1	1	1	1
4	1	1	1	1	1	1	1
5	1	1	1	1	1	1	1
6	1	1	1	1	1	1	1
7	1	1	1	1	1	1	1
8	1	1	1	1	1	1	1
9	1	1	1	1	1	1	1
10	1	1	1	1	2	2	1
11	2	1	2	1	2	2	2
12	2	1	2	1	2	2	2
13	2	1	2	2	2	2	2
14	2	1	2	2	2	2	2
15	2	1	2	2	2	2	2
16	2	1	2	2	2	2	2
17	2	1	2	2	2	1	2
18	1	1	1	1	2	1	1
19	1	1	1	1	1	1	1
20	1	1	1	1	1	1	1
21	1	1	1	1	1	1	1
22	1	1	1	1	1	1	1
23	1	1	1	1	1	1	1

NOTES:

1) THE NEW YORK STATE THRUWAY IS A LIMITED ACCESS, HIGH-SPEED, HIGH-VOLUME HIGHWAY. TRAFFIC SHALL BE MAINTAINED IN ACCORDANCE WITH THE *MANUAL ON UNIFORM TRAFFIC CONTROL DEVICES (MUTCD)*, THE *WORK ZONE TRAFFIC CONTROL PLANS*, AND THE *STANDARD SPECIFICATIONS* SECTION 619 AS AMENDED BY THE AUTHORITY.

2) LANE CLOSURES ON THE THRUWAY SHALL ONLY BE ALLOWED IN ACCORDANCE WITH THESE TRAFFIC MANAGEMENT TABLE(S), UNLESS INDICATED OTHERWISE IN THE CONTRACT PLANS OR PROPOSAL DOCUMENTS.

3) LANE CLOSURE CHARTS SHALL APPLY AS FOLLOWS:

- 1,150 VEH/HR/LANE: APPLIES TO ALL WORK REQUIRING LANE CLOSURE(S) EXCEPT AS PERMITTED BELOW.

- 1,300 VEH/HR/LANE: APPLIES TO NON-EVASIVE WORK WHERE WORKERS AND/OR EQUIPMENT ARE LOCATED 4 FT. OR MORE FROM TRAVEL (SPACE) LANE, OR AS APPROVED BY THE THRUWAY PROJECT ENGINEER. WORK SHOULD BE ABLE TO BE IMMEDIATELY STOPPED AND LANE CLOSURE(S) REMOVED IN THE EVENT QUEUES, GREATER THAN 1 MILE, DEVELOP.

NEW YORK STATE OF OPPORTUNITY. Thruway Authority

U.S. CUSTOMARY STANDARD SHEET

LANE CLOSURE CHARTS
1,150 VEHICLES PER HOUR
SYRACUSE DIVISION
(SHEET 14 OF 18)

APPROVED SEPTEMBER 1, 2018

/S/ PATRICK THOMPSON, P.E.
DIRECTOR DESIGN SUPPORT SERVICES BUREAU

ISSUED UNDER DB 18-003

TA 619-32

I-90 WESTBOUND INTERCHANGES 41 TO 42 (1,150 VEH/HR/LANE)

LANES REQUIRED TO BE OPEN BY HOUR AND TIME OF DAY

SPRING SEASON MARCH 1 THRU MAY 20

HR/DAY	MON	TUES	WEDS	THUR	FRI	SAT	SUN
0	1	1	1	1	1	1	1
1	1	1	1	1	1	1	1
2	1	1	1	1	1	1	1
3	1	1	1	1	1	1	1
4	1	1	1	1	1	1	1
5	1	1	1	1	1	1	1
6	1	1	1	1	1	1	1
7	1	1	1	1	1	1	1
8	1	1	1	1	1	1	1
9	1	1	1	1	1	2	1
10	1	1	1	1	2	2	1
11	2	1	1	1	2	2	2
12	2	1	1	1	2	2	2
13	2	1	1	2	2	2	2
14	2	1	2	2	2	2	2
15	2	2	2	2	2	2	2
16	2	2	2	2	2	2	2
17	2	2	2	2	2	2	2
18	2	1	1	2	2	1	2
19	1	1	1	1	2	1	2
20	1	1	1	1	1	1	2
21	1	1	1	1	1	1	1
22	1	1	1	1	1	1	1
23	1	1	1	1	1	1	1

SUMMER SEASON MAY 21 THRU SEPTEMBER 15

HR/DAY	MON	TUES	WEDS	THUR	FRI	SAT	SUN
0	1	1	1	1	1	1	1
1	1	1	1	1	1	1	1
2	1	1	1	1	1	1	1
3	1	1	1	1	1	1	1
4	1	1	1	1	1	1	1
5	1	1	1	1	1	1	1
6	1	1	1	1	1	1	1
7	1	1	1	1	1	1	1
8	1	1	1	1	2	1	1
9	2	1	1	2	2	2	1
10	2	2	2	2	2	2	2
11	2	2	2	2	2	2	2
12	2	2	2	2	2	2	2
13	2	2	2	2	2	2	2
14	2	2	2	2	2	2	2
15	2	2	2	2	2	2	2
16	2	2	2	2	2	2	2
17	2	2	2	2	2	2	2
18	2	2	2	2	2	2	2
19	2	1	1	2	2	2	2
20	1	1	1	1	2	1	2
21	1	1	1	1	1	1	2
22	1	1	1	1	1	1	1
23	1	1	1	1	1	1	1

LANES REQUIRED TO BE OPEN BY HOUR AND TIME OF DAY

FALL SEASON SEPTEMBER 16 THRU November 30

HR/DAY	MON	TUES	WEDS	THUR	FRI	SAT	SUN
0	1	1	1	1	1	1	1
1	1	1	1	1	1	1	1
2	1	1	1	1	1	1	1
3	1	1	1	1	1	1	1
4	1	1	1	1	1	1	1
5	1	1	1	1	1	1	1
6	1	1	1	1	1	1	1
7	1	2	2	2	1	1	1
8	1	2	1	2	1	1	1
9	1	1	2	1	1	2	1
10	2	2	2	2	2	2	2
11	2	2	2	2	2	2	2
12	2	1	2	2	2	2	2
13	2	2	2	2	2	2	2
14	2	2	2	2	2	2	2
15	2	2	2	2	2	2	2
16	2	2	2	2	2	2	2
17	2	2	2	2	2	2	2
18	2	2	2	1	2	2	2
19	1	1	1	1	2	1	2
20	1	1	1	1	1	1	2
21	1	1	1	1	1	1	1
22	1	1	1	1	1	1	1
23	1	1	1	1	1	1	1

WINTER SEAS. DECEMBER 1 THRU February 28

HR/DAY	MON	TUES	WEDS	THUR	FRI	SAT	SUN
0	1	1	1	1	1	1	1
1	1	1	1	1	1	1	1
2	1	1	1	1	1	1	1
3	1	1	1	1	1	1	1
4	1	1	1	1	1	1	1
5	1	1	1	1	1	1	1
6	1	1	1	1	1	1	1
7	1	1	1	1	1	1	1
8	1	1	1	1	1	1	1
9	1	1	1	1	1	1	1
10	1	1	1	1	1	1	1
11	1	1	1	1	2	2	1
12	1	1	1	1	2	2	2
13	2	1	1	1	2	2	2
14	2	1	2	2	2	2	2
15	2	2	2	2	2	2	2
16	2	2	2	2	2	2	2
17	2	2	2	2	2	1	2
18	1	1	1	1	2	1	2
19	1	1	1	1	1	1	1
20	1	1	1	1	1	1	1
21	1	1	1	1	1	1	1
22	1	1	1	1	1	1	1
23	1	1	1	1	1	1	1

I-90 EASTBOUND INTERCHANGES 42 TO 41 (1,150 VEH/HR/LANE)

LANES REQUIRED TO BE OPEN BY HOUR AND TIME OF DAY

SPRING SEASON MARCH 1 THRU MAY 20

HR/DAY	MON	TUES	WEDS	THUR	FRI	SAT	SUN
0	1	1	1	1	1	1	1
1	1	1	1	1	1	1	1
2	1	1	1	1	1	1	1
3	1	1	1	1	1	1	1
4	1	1	1	1	1	1	1
5	1	1	1	1	1	1	1
6	1	1	1	1	1	1	1
7	1	1	1	1	1	1	1
8	1	1	1	1	2	1	1
9	1	1	1	1	2	2	1
10	2	1	1	1	2	2	2
11	2	1	1	1	2	2	2
12	2	1	1	1	2	2	2
13	2	1	1	2	2	2	2
14	2	1	2	2	2	2	2
15	2	1	2	2	2	2	2
16	2	1	2	2	2	2	2
17	2	1	2	2	2	2	2
18	1	1	1	1	2	1	2
19	1	1	1	1	1	1	2
20	1	1	1	1	1	1	1
21	1	1	1	1	1	1	1
22	1	1	1	1	1	1	1
23	1	1	1	1	1	1	1

SUMMER SEASON MAY 21 THRU SEPTEMBER 15

HR/DAY	MON	TUES	WEDS	THUR	FRI	SAT	SUN
0	1	1	1	1	1	1	1
1	1	1	1	1	1	1	1
2	1	1	1	1	1	1	1
3	1	1	1	1	1	1	1
4	1	1	1	1	1	1	1
5	1	1	1	1	1	1	1
6	1	1	1	1	1	1	1
7	2	1	1	2	2	1	1
8	2	2	2	2	2	2	1
9	2	2	2	2	2	2	2
10	2	2	2	2	2	2	2
11	2	2	2	2	2	2	2
12	2	2	2	2	2	2	2
13	2	2	2	2	2	2	2
14	2	2	2	2	2	2	2
15	2	2	2	2	2	2	2
16	2	2	2	2	2	2	2
17	2	2	2	2	2	2	2
18	2	1	2	2	2	2	2
19	1	1	1	2	2	1	2
20	1	1	1	1	1	1	2
21	1	1	1	1	1	1	1
22	1	1	1	1	1	1	1
23	1	1	1	1	1	1	1

LANES REQUIRED TO BE OPEN BY HOUR AND TIME OF DAY

FALL SEASON SEPTEMBER 16 THRU November 30

HR/DAY	MON	TUES	WEDS	THUR	FRI	SAT	SUN
0	1	1	1	1	1	1	1
1	1	1	1	1	1	1	1
2	1	1	1	1	1	1	1
3	1	1	1	1	1	1	1
4	1	1	1	1	1	1	1
5	1	1	1	1	1	1	1
6	1	1	1	1	1	1	1
7	1	1	1	1	1	1	1
8	2	1	2	1	2	1	1
9	2	1	2	2	2	2	2
10	2	2	2	2	2	2	2
11	2	2	2	2	2	2	2
12	2	2	2	2	2	2	2
13	2	2	2	2	2	2	2
14	2	2	2	2	2	2	2
15	2	2	2	2	2	2	2
16	2	2	2	2	2	2	2
17	2	2	2	2	2	2	2
18	1	2	2	1	2	1	2
19	1	1	1	1	2	1	2
20	1	1	1	1	1	1	2
21	1	1	1	1	1	1	1
22	1	1	1	1	1	1	1
23	1	1	1	1	1	1	1

WINTER SEAS. DECEMBER 1 THRU February 28

HR/DAY	MON	TUES	WEDS	THUR	FRI	SAT	SUN
0	1	1	1	1	1	1	1
1	1	1	1	1	1	1	1
2	1	1	1	1	1	1	1
3	1	1	1	1	1	1	1
4	1	1	1	1	1	1	1
5	1	1	1	1	1	1	1
6	1	1	1	1	1	1	1
7	1	1	1	1	1	1	1
8	1	1	1	1	1	1	1
9	1	1	1	1	1	1	1
10	2	1	2	1	2	2	2
11	2	1	2	1	2	2	2
12	2	1	2	1	2	2	2
13	2	1	2	2	2	2	2
14	2	1	2	2	2	2	2
15	2	1	2	2	2	2	2
16	2	1	2	2	2	1	2
17	1	1	1	2	2	1	2
18	1	1	1	1	2	1	1
19	1	1	1	1	1	1	1
20	1	1	1	1	1	1	1
21	1	1	1	1	1	1	1
22	1	1	1	1	1	1	1
23	1	1	1	1	1	1	1

NOTES:

1) THE NEW YORK STATE THRUWAY IS A LIMITED ACCESS, HIGH-SPEED, HIGH-VOLUME HIGHWAY. TRAFFIC SHALL BE MAINTAINED IN ACCORDANCE WITH THE *MANUAL ON UNIFORM TRAFFIC CONTROL DEVICES (MUTCD)*, THE *WORK ZONE TRAFFIC CONTROL PLANS*, AND THE *STANDARD SPECIFICATIONS* SECTION 619 AS AMENDED BY THE AUTHORITY.

2) LANE CLOSURES ON THE THRUWAY SHALL ONLY BE ALLOWED IN ACCORDANCE WITH THESE TRAFFIC MANAGEMENT TABLE(S), UNLESS INDICATED OTHERWISE IN THE CONTRACT PLANS OR PROPOSAL DOCUMENTS.

3) LANE CLOSURE CHARTS SHALL APPLY AS FOLLOWS:

- 1,150 VEH/HR/LANE: APPLIES TO ALL WORK REQUIRING LANE CLOSURE(S) EXCEPT AS PERMITTED BELOW.

- 1,300 VEH/HR/LANE: APPLIES TO NON-EVASIVE WORK WHERE WORKERS AND/OR EQUIPMENT ARE LOCATED 4 FT. OR MORE FROM TRAVEL (SPACE) LANE, OR AS APPROVED BY THE THRUWAY PROJECT ENGINEER. WORK SHOULD BE ABLE TO BE IMMEDIATELY STOPPED AND LANE CLOSURE(S) REMOVED IN THE EVENT QUEUES, GREATER THAN 1 MILE, DEVELOP.

NEW YORK STATE OF OPPORTUNITY. Thruway Authority

U.S. CUSTOMARY STANDARD SHEET

LANE CLOSURE CHARTS
1,150 VEHICLES PER HOUR
SYRACUSE DIVISION
(SHEET 15 OF 18)

APPROVED SEPTEMBER 1, 2018

/S/ PATRICK THOMPSON, P.E.
DIRECTOR DESIGN SUPPORT SERVICES BUREAU

ISSUED UNDER DB 18-003

TA 619-32

I-90 WESTBOUND INTERCHANGES 42 TO 43 (1,150 VEH/HR/LANE)

LANES REQUIRED TO BE OPEN BY HOUR AND TIME OF DAY

SPRING SEASON MARCH 1 THRU MAY 20

HR/DAY	MON	TUES	WEDS	THUR	FRI	SAT	SUN
0	1	1	1	1	1	1	1
1	1	1	1	1	1	1	1
2	1	1	1	1	1	1	1
3	1	1	1	1	1	1	1
4	1	1	1	1	1	1	1
5	1	1	1	1	1	1	1
6	1	1	1	1	1	1	1
7	1	1	1	1	1	1	1
8	1	1	1	1	1	1	1
9	1	1	1	1	2	2	1
10	1	1	1	1	2	2	1
11	2	1	1	2	2	2	2
12	2	1	1	2	2	2	2
13	2	1	1	2	2	2	2
14	2	2	2	2	2	2	2
15	2	2	2	2	2	2	2
16	2	2	2	2	2	2	2
17	2	2	2	2	2	2	2
18	2	1	2	2	2	2	2
19	2	1	1	1	2	1	2
20	1	1	1	1	1	1	2
21	1	1	1	1	1	1	1
22	1	1	1	1	1	1	1
23	1	1	1	1	1	1	1

SUMMER SEASON MAY 21 THRU SEPTEMBER 15

HR/DAY	MON	TUES	WEDS	THUR	FRI	SAT	SUN
0	1	1	1	1	1	1	1
1	1	1	1	1	1	1	1
2	1	1	1	1	1	1	1
3	1	1	1	1	1	1	1
4	1	1	1	1	1	1	1
5	1	1	1	1	1	1	1
6	1	1	1	1	1	1	1
7	1	1	1	1	1	1	1
8	1	1	1	2	2	1	1
9	2	2	2	2	2	2	1
10	2	2	2	2	2	2	2
11	2	2	2	2	2	2	2
12	2	2	2	2	2	2	2
13	2	2	2	2	2	2	2
14	2	2	2	2	2	2	2
15	2	2	2	2	2	2	2
16	2	2	2	2	2	2	2
17	2	2	2	2	2	2	2
18	2	2	2	2	2	2	2
19	2	1	1	2	2	2	2
20	2	1	1	1	2	2	2
21	1	1	1	1	2	2	2
22	1	1	1	1	1	1	1
23	1	1	1	1	1	1	1

LANES REQUIRED TO BE OPEN BY HOUR AND TIME OF DAY

FALL SEASON SEPTEMBER 16 THRU November 30

HR/DAY	MON	TUES	WEDS	THUR	FRI	SAT	SUN
0	1	1	1	1	1	1	1
1	1	1	1	1	1	1	1
2	1	1	1	1	1	1	1
3	1	1	1	1	1	1	1
4	1	1	1	1	1	1	1
5	1	1	1	1	1	1	1
6	1	1	1	1	1	1	1
7	1	1	1	1	1	1	1
8	1	1	1	1	1	1	1
9	1	1	1	1	1	2	1
10	2	1	2	2	2	2	2
11	2	2	2	2	2	2	2
12	2	2	2	2	2	2	2
13	2	2	2	2	2	2	2
14	2	2	2	2	2	2	2
15	2	2	2	2	2	2	2
16	2	2	2	2	2	2	2
17	2	2	2	2	2	2	2
18	2	2	2	2	2	2	2
19	1	1	1	1	2	2	2
20	1	1	1	1	1	1	2
21	1	1	1	1	1	1	1
22	1	1	1	1	1	1	1
23	1	1	1	1	1	1	1

WINTER SEAS. DECEMBER 1 THRU February 28

HR/DAY	MON	TUES	WEDS	THUR	FRI	SAT	SUN
0	1	1	1	1	1	1	1
1	1	1	1	1	1	1	1
2	1	1	1	1	1	1	1
3	1	1	1	1	1	1	1
4	1	1	1	1	1	1	1
5	1	1	1	1	1	1	1
6	1	1	1	1	1	1	1
7	1	1	1	1	1	1	1
8	1	1	1	1	1	1	1
9	1	1	1	1	1	1	1
10	1	1	1	1	1	2	1
11	1	1	2	1	2	2	2
12	2	1	2	2	2	2	2
13	2	2	2	2	2	2	2
14	2	2	2	2	2	2	2
15	2	2	2	2	2	2	2
16	2	2	2	2	2	2	2
17	2	2	2	2	2	2	2
18	1	1	1	1	2	1	2
19	1	1	1	1	1	1	1
20	1	1	1	1	1	1	1
21	1	1	1	1	1	1	1
22	1	1	1	1	1	1	1
23	1	1	1	1	1	1	1

I-90 EASTBOUND INTERCHANGES 43 TO 42 (1,150 VEH/HR/LANE)

LANES REQUIRED TO BE OPEN BY HOUR AND TIME OF DAY

SPRING SEASON MARCH 1 THRU MAY 20

HR/DAY	MON	TUES	WEDS	THUR	FRI	SAT	SUN
0	1	1	1	1	1	1	1
1	1	1	1	1	1	1	1
2	1	1	1	1	1	1	1
3	1	1	1	1	1	1	1
4	1	1	1	1	1	1	1
5	1	1	1	1	1	1	1
6	1	1	1	1	1	1	1
7	2	2	2	2	2	1	1
8	2	2	2	2	2	2	1
9	2	1	2	2	2	2	2
10	2	1	2	2	2	2	2
11	2	1	2	2	2	2	2
12	2	1	2	2	2	2	2
13	2	2	2	2	2	2	2
14	2	2	2	2	2	2	2
15	2	2	2	2	2	2	2
16	2	2	2	2	2	2	2
17	2	2	2	2	2	2	2
18	1	1	1	2	2	1	2
19	1	1	1	1	2	1	2
20	1	1	1	1	1	1	1
21	1	1	1	1	1	1	1
22	1	1	1	1	1	1	1
23	1	1	1	1	1	1	1

SUMMER SEASON MAY 21 THRU SEPTEMBER 15

HR/DAY	MON	TUES	WEDS	THUR	FRI	SAT	SUN
0	1	1	1	1	1	1	1
1	1	1	1	1	1	1	1
2	1	1	1	1	1	1	1
3	1	1	1	1	1	1	1
4	1	1	1	1	1	1	1
5	1	1	1	1	1	1	1
6	1	1	1	1	1	1	1
7	2	2	2	2	2	1	1
8	2	2	2	2	2	2	1
9	2	2	2	2	2	2	2
10	2	2	2	2	2	2	2
11	2	2	2	2	2	2	2
12	2	2	2	2	2	2	2
13	2	2	2	2	2	2	2
14	2	2	2	2	2	2	2
15	2	2	2	2	2	2	2
16	2	2	2	2	2	2	2
17	2	2	2	2	2	2	2
18	2	2	2	2	2	2	2
19	1	1	1	2	2	2	2
20	1	1	1	1	2	1	2
21	1	1	1	1	1	1	1
22	1	1	1	1	1	1	1
23	1	1	1	1	1	1	1

LANES REQUIRED TO BE OPEN BY HOUR AND TIME OF DAY

FALL SEASON SEPTEMBER 16 THRU November 30

HR/DAY	MON	TUES	WEDS	THUR	FRI	SAT	SUN
0	1	1	1	1	1	1	1
1	1	1	1	1	1	1	1
2	1	1	1	1	1	1	1
3	1	1	1	1	1	1	1
4	1	1	1	1	1	1	1
5	1	1	1	1	1	1	1
6	1	1	1	1	1	1	1
7	2	2	2	2	2	1	1
8	2	2	2	2	2	2	1
9	2	2	2	2	2	2	2
10	2	2	2	2	2	2	2
11	2	2	2	2	2	2	2
12	2	2	2	2	2	2	2
13	2	2	2	2	2	2	2
14	2	2	2	2	2	2	2
15	2	2	2	2	2	2	2
16	2	2	2	2	2	2	2
17	2	2	2	2	2	2	2
18	2	2	2	2	2	1	2
19	1	1	1	1	2	1	2
20	1	1	1	1	1	1	2
21	1	1	1	1	1	1	1
22	1	1	1	1	1	1	1
23	1	1	1	1	1	1	1

WINTER SEAS. DECEMBER 1 THRU February 28

HR/DAY	MON	TUES	WEDS	THUR	FRI	SAT	SUN
0	1	1	1	1	1	1	1
1	1	1	1	1	1	1	1
2	1	1	1	1	1	1	1
3	1	1	1	1	1	1	1
4	1	1	1	1	1	1	1
5	1	1	1	1	1	1	1
6	1	1	1	1	1	1	1
7	1	1	2	2	1	1	1
8	1	1	2	2	1	1	1
9	1	1	2	2	2	2	1
10	2	2	2	2	2	2	2
11	2	2	2	2	2	2	2
12	2	2	2	2	2	2	2
13	2	2	2	2	2	2	2
14	2	2	2	2	2	2	2
15	2	2	2	2	2	2	2
16	2	2	2	2	2	2	2
17	2	2	2	2	2	2	2
18	1	1	1	1	2	1	2
19	1	1	1	1	1	1	1
20	1	1	1	1	1	1	1
21	1	1	1	1	1	1	1
22	1	1	1	1	1	1	1
23	1	1	1	1	1	1	1

NOTES:

1) THE NEW YORK STATE THRUWAY IS A LIMITED ACCESS, HIGH-SPEED, HIGH-VOLUME HIGHWAY. TRAFFIC SHALL BE MAINTAINED IN ACCORDANCE WITH THE *MANUAL ON UNIFORM TRAFFIC CONTROL DEVICES (MUTCD)*, THE *WORK ZONE TRAFFIC CONTROL PLANS*, AND THE *STANDARD SPECIFICATIONS* SECTION 619 AS AMENDED BY THE AUTHORITY.

2) LANE CLOSURES ON THE THRUWAY SHALL ONLY BE ALLOWED IN ACCORDANCE WITH THESE TRAFFIC MANAGEMENT TABLE(S), UNLESS INDICATED OTHERWISE IN THE CONTRACT PLANS OR PROPOSAL DOCUMENTS.

3) LANE CLOSURE CHARTS SHALL APPLY AS FOLLOWS:

- 1,150 VEH/HR/LANE: APPLIES TO ALL WORK REQUIRING LANE CLOSURE(S) EXCEPT AS PERMITTED BELOW.

- 1,300 VEH/HR/LANE: APPLIES TO NON-EVASIVE WORK WHERE WORKERS AND/OR EQUIPMENT ARE LOCATED 4 FT. OR MORE FROM TRAVEL (SPACE) LANE, OR AS APPROVED BY THE THRUWAY PROJECT ENGINEER. WORK SHOULD BE ABLE TO BE IMMEDIATELY STOPPED AND LANE CLOSURE(S) REMOVED IN THE EVENT QUEUES, GREATER THAN 1 MILE, DEVELOP.

NEW YORK STATE OF OPPORTUNITY. Thruway Authority

U.S. CUSTOMARY STANDARD SHEET

LANE CLOSURE CHARTS
1,150 VEHICLES PER HOUR
SYRACUSE DIVISION
(SHEET 16 OF 18)

APPROVED SEPTEMBER 1, 2018

/S/ PATRICK THOMPSON, P.E.
DIRECTOR DESIGN SUPPORT SERVICES BUREAU

ISSUED UNDER DB 18-003

TA 619-32

I-90 WESTBOUND INTERCHANGES 43 TO 44 (1,150 VEH/HR/LANE)

LANES REQUIRED TO BE OPEN BY HOUR AND TIME OF DAY

SPRING SEASON MARCH 1 THRU MAY 20

HR/DAY	MON	TUES	WEDS	THUR	FRI	SAT	SUN
0	1	1	1	1	1	1	1
1	1	1	1	1	1	1	1
2	1	1	1	1	1	1	1
3	1	1	1	1	1	1	1
4	1	1	1	1	1	1	1
5	1	1	1	1	1	1	1
6	1	1	1	1	1	1	1
7	2	2	2	2	2	1	1
8	2	2	2	2	2	1	1
9	2	1	2	2	2	2	1
10	2	1	2	2	2	2	1
11	2	1	2	2	2	2	2
12	2	1	2	2	2	2	2
13	2	1	2	2	2	2	2
14	2	2	2	2	2	2	2
15	2	2	2	2	2	2	2
16	2	2	2	2	2	2	2
17	2	2	2	2	2	2	2
18	2	2	2	2	2	2	2
19	2	1	1	1	2	1	2
20	1	1	1	1	1	1	2
21	1	1	1	1	1	1	1
22	1	1	1	1	1	1	1
23	1	1	1	1	1	1	1

SUMMER SEASON MAY 21 THRU SEPTEMBER 15

HR/DAY	MON	TUES	WEDS	THUR	FRI	SAT	SUN
0	1	1	1	1	1	1	1
1	1	1	1	1	1	1	1
2	1	1	1	1	1	1	1
3	1	1	1	1	1	1	1
4	1	1	1	1	1	1	1
5	1	1	1	1	1	1	1
6	1	1	1	1	1	1	1
7	2	2	2	2	2	1	1
8	2	2	2	2	2	1	1
9	2	2	2	2	2	2	1
10	2	2	2	2	2	2	2
11	2	2	2	2	2	2	2
12	2	2	2	2	2	2	2
13	2	2	2	2	2	2	2
14	2	2	2	2	2	2	2
15	2	2	2	2	2	2	2
16	2	2	2	2	2	2	2
17	2	2	2	2	2	2	2
18	2	2	2	2	2	2	2
19	2	1	2	2	2	2	2
20	2	1	1	1	2	2	2
21	1	1	1	1	2	2	2
22	1	1	1	1	1	1	1
23	1	1	1	1	1	1	1

LANES REQUIRED TO BE OPEN BY HOUR AND TIME OF DAY

FALL SEASON SEPTEMBER 16 THRU November 30

HR/DAY	MON	TUES	WEDS	THUR	FRI	SAT	SUN
0	1	1	1	1	1	1	1
1	1	1	1	1	1	1	1
2	1	1	1	1	1	1	1
3	1	1	1	1	1	1	1
4	1	1	1	1	1	1	1
5	1	1	1	1	1	1	1
6	1	1	1	1	1	1	1
7	2	2	2	2	2	1	1
8	2	2	2	2	2	1	1
9	2	2	2	2	2	2	1
10	2	2	2	2	2	2	2
11	2	2	2	2	2	2	2
12	2	2	2	2	2	2	2
13	2	2	2	2	2	2	2
14	2	2	2	2	2	2	2
15	2	2	2	2	2	2	2
16	2	2	2	2	2	2	2
17	2	2	2	2	2	2	2
18	2	2	2	2	2	2	2
19	1	1	1	1	2	2	2
20	1	1	1	1	2	1	2
21	1	1	1	1	1	1	1
22	1	1	1	1	1	1	1
23	1	1	1	1	1	1	1

WINTER SEAS. DECEMBER 1 THRU February 28

HR/DAY	MON	TUES	WEDS	THUR	FRI	SAT	SUN
0	1	1	1	1	1	1	1
1	1	1	1	1	1	1	1
2	1	1	1	1	1	1	1
3	1	1	1	1	1	1	1
4	1	1	1	1	1	1	1
5	1	1	1	1	1	1	1
6	1	1	1	1	1	1	1
7	2	2	2	2	2	1	1
8	2	2	2	2	2	1	1
9	2	2	2	2	2	1	1
10	2	2	2	2	2	2	1
11	2	2	2	2	2	2	2
12	2	2	2	2	2	2	2
13	2	2	2	2	2	2	2
14	2	2	2	2	2	2	2
15	2	2	2	2	2	2	2
16	2	2	2	2	2	2	2
17	2	2	2	2	2	2	2
18	1	1	1	2	2	2	2
19	1	1	1	1	2	1	1
20	1	1	1	1	1	1	1
21	1	1	1	1	1	1	1
22	1	1	1	1	1	1	1
23	1	1	1	1	1	1	1

I-90 EASTBOUND INTERCHANGES 44 TO 43 (1,150 VEH/HR/LANE)

LANES REQUIRED TO BE OPEN BY HOUR AND TIME OF DAY

SPRING SEASON MARCH 1 THRU MAY 20

HR/DAY	MON	TUES	WEDS	THUR	FRI	SAT	SUN
0	1	1	1	1	1	1	1
1	1	1	1	1	1	1	1
2	1	1	1	1	1	1	1
3	1	1	1	1	1	1	1
4	1	1	1	1	1	1	1
5	1	1	1	1	1	1	1
6	1	1	1	1	1	1	1
7	2	2	2	2	2	1	1
8	2	2	2	2	2	2	1
9	2	1	2	2	2	2	2
10	2	1	2	2	2	2	2
11	2	1	2	2	2	2	2
12	2	1	2	2	2	2	2
13	2	2	2	2	2	2	2
14	2	2	2	2	2	2	2
15	2	2	2	2	2	2	2
16	2	2	2	2	2	2	2
17	2	2	2	2	2	2	2
18	1	1	1	2	2	1	2
19	1	1	1	1	2	1	2
20	1	1	1	1	1	1	1
21	1	1	1	1	1	1	1
22	1	1	1	1	1	1	1
23	1	1	1	1	1	1	1

SUMMER SEASON MAY 21 THRU SEPTEMBER 15

HR/DAY	MON	TUES	WEDS	THUR	FRI	SAT	SUN
0	1	1	1	1	1	1	1
1	1	1	1	1	1	1	1
2	1	1	1	1	1	1	1
3	1	1	1	1	1	1	1
4	1	1	1	1	1	1	1
5	1	1	1	1	1	1	1
6	1	1	1	1	1	1	1
7	2	2	2	2	2	1	1
8	2	2	2	2	2	2	1
9	2	2	2	2	2	2	2
10	2	2	2	2	2	2	2
11	2	2	2	2	2	2	2
12	2	2	2	2	2	2	2
13	2	2	2	2	2	2	2
14	2	2	2	2	2	2	2
15	2	2	2	2	2	2	2
16	2	2	2	2	2	2	2
17	2	2	2	2	2	2	2
18	2	2	2	2	2	2	2
19	1	1	1	2	2	2	2
20	1	1	1	1	2	1	2
21	1	1	1	1	1	1	1
22	1	1	1	1	1	1	1
23	1	1	1	1	1	1	1

LANES REQUIRED TO BE OPEN BY HOUR AND TIME OF DAY

FALL SEASON SEPTEMBER 16 THRU November 30

HR/DAY	MON	TUES	WEDS	THUR	FRI	SAT	SUN
0	1	1	1	1	1	1	1
1	1	1	1	1	1	1	1
2	1	1	1	1	1	1	1
3	1	1	1	1	1	1	1
4	1	1	1	1	1	1	1
5	1	1	1	1	1	1	1
6	1	1	1	1	1	1	1
7	2	2	2	2	2	1	1
8	2	2	2	2	2	2	1
9	2	2	2	2	2	2	2
10	2	2	2	2	2	2	2
11	2	2	2	2	2	2	2
12	2	2	2	2	2	2	2
13	2	2	2	2	2	2	2
14	2	2	2	2	2	2	2
15	2	2	2	2	2	2	2
16	2	2	2	2	2	2	2
17	2	2	2	2	2	2	2
18	2	2	2	2	2	1	2
19	1	1	1	1	2	1	2
20	1	1	1	1	1	1	2
21	1	1	1	1	1	1	1
22	1	1	1	1	1	1	1
23	1	1	1	1	1	1	1

WINTER SEAS. DECEMBER 1 THRU February 28

HR/DAY	MON	TUES	WEDS	THUR	FRI	SAT	SUN
0	1	1	1	1	1	1	1
1	1	1	1	1	1	1	1
2	1	1	1	1	1	1	1
3	1	1	1	1	1	1	1
4	1	1	1	1	1	1	1
5	1	1	1	1	1	1	1
6	1	1	1	1	1	1	1
7	1	1	2	2	1	1	1
8	1	1	2	2	1	1	1
9	1	1	2	2	2	2	1
10	2	2	2	2	2	2	2
11	2	2	2	2	2	2	2
12	2	2	2	2	2	2	2
13	2	2	2	2	2	2	2
14	2	2	2	2	2	2	2
15	2	2	2	2	2	2	2
16	2	2	2	2	2	2	2
17	2	2	2	2	2	2	2
18	1	1	1	1	2	1	2
19	1	1	1	1	1	1	1
20	1	1	1	1	1	1	1
21	1	1	1	1	1	1	1
22	1	1	1	1	1	1	1
23	1	1	1	1	1	1	1

NOTES:

1) THE NEW YORK STATE THRUWAY IS A LIMITED ACCESS, HIGH-SPEED, HIGH-VOLUME HIGHWAY. TRAFFIC SHALL BE MAINTAINED IN ACCORDANCE WITH THE *MANUAL ON UNIFORM TRAFFIC CONTROL DEVICES (MUTCD)*, THE *WORK ZONE TRAFFIC CONTROL PLANS*, AND THE *STANDARD SPECIFICATIONS* SECTION 619 AS AMENDED BY THE AUTHORITY.

2) LANE CLOSURES ON THE THRUWAY SHALL ONLY BE ALLOWED IN ACCORDANCE WITH THESE TRAFFIC MANAGEMENT TABLE(S), UNLESS INDICATED OTHERWISE IN THE CONTRACT PLANS OR PROPOSAL DOCUMENTS.

3) LANE CLOSURE CHARTS SHALL APPLY AS FOLLOWS:

- 1,150 VEH/HR/LANE: APPLIES TO ALL WORK REQUIRING LANE CLOSURE(S) EXCEPT AS PERMITTED BELOW.

- 1,300 VEH/HR/LANE: APPLIES TO NON-EVASIVE WORK WHERE WORKERS AND/OR EQUIPMENT ARE LOCATED 4 FT. OR MORE FROM TRAVEL (SPACE) LANE, OR AS APPROVED BY THE THRUWAY PROJECT ENGINEER. WORK SHOULD BE ABLE TO BE IMMEDIATELY STOPPED AND LANE CLOSURE(S) REMOVED IN THE EVENT QUEUES, GREATER THAN 1 MILE, DEVELOP.

NEW YORK STATE OF OPPORTUNITY. Thruway Authority

U.S. CUSTOMARY STANDARD SHEET

LANE CLOSURE CHARTS
1,150 VEHICLES PER HOUR
SYRACUSE DIVISION
(SHEET 17 OF 18)

APPROVED SEPTEMBER 1, 2018

/S/ PATRICK THOMPSON, P.E.
DIRECTOR DESIGN SUPPORT SERVICES BUREAU

ISSUED UNDER DB 18-003

TA 619-32

I-90 WESTBOUND INTERCHANGES 44 TO 45 (1,150 VEH/HR/LANE)

LANES REQUIRED TO BE OPEN BY HOUR AND TIME OF DAY

SPRING SEASON MARCH 1 THRU MAY 20

HR/DAY	MON	TUES	WEDS	THUR	FRI	SAT	SUN
0	1	1	1	1	1	1	1
1	1	1	1	1	1	1	1
2	1	1	1	1	1	1	1
3	1	1	1	1	1	1	1
4	1	1	1	1	1	1	1
5	1	1	1	1	1	1	1
6	2	2	2	2	2	1	1
7	3	3	3	3	3	1	1
8	3	2	2	2	2	2	1
9	2	2	2	2	2	2	1
10	2	2	2	2	2	2	2
11	2	2	2	2	2	2	2
12	2	2	2	2	2	2	2
13	2	2	2	2	2	2	2
14	2	2	2	2	3	2	2
15	3	2	3	3	3	2	3
16	3	3	3	3	3	2	3
17	3	2	3	3	3	2	3
18	2	2	2	2	2	2	3
19	2	1	2	2	2	2	2
20	2	1	1	2	2	2	2
21	1	1	1	1	2	1	2
22	1	1	1	1	1	1	1
23	1	1	1	1	1	1	1

SUMMER SEASON MAY 21 THRU SEPTEMBER 15

HR/DAY	MON	TUES	WEDS	THUR	FRI	SAT	SUN
0	1	1	1	1	1	1	1
1	1	1	1	1	1	1	1
2	1	1	1	1	1	1	1
3	1	1	1	1	1	1	1
4	1	1	1	1	1	1	1
5	1	1	1	1	1	1	1
6	2	2	2	2	2	1	1
7	3	3	3	3	3	1	1
8	3	2	3	3	2	2	1
9	2	2	2	2	2	2	2
10	2	2	2	2	2	3	2
11	2	2	2	2	3	3	3
12	3	2	2	2	3	3	3
13	3	2	2	2	3	3	3
14	3	2	2	3	3	3	3
15	3	3	3	3	3	3	3
16	3	3	3	3	3	3	3
17	3	3	3	3	3	3	3
18	2	2	2	2	3	3	3
19	2	2	2	2	2	2	3
20	2	1	2	2	2	2	3
21	2	1	2	2	2	2	2
22	1	1	1	1	2	2	2
23	1	1	1	1	2	2	1

LANES REQUIRED TO BE OPEN BY HOUR AND TIME OF DAY

FALL SEASON SEPTEMBER 16 THRU November 30

HR/DAY	MON	TUES	WEDS	THUR	FRI	SAT	SUN
0	1	1	1	1	1	1	1
1	1	1	1	1	1	1	1
2	1	1	1	1	1	1	1
3	1	1	1	1	1	1	1
4	1	1	1	1	1	1	1
5	1	1	1	1	1	1	1
6	2	2	2	2	2	1	1
7	3	3	3	3	3	1	1
8	2	2	2	3	2	2	1
9	2	2	2	2	2	2	2
10	2	2	2	2	2	2	2
11	2	2	2	2	2	2	2
12	2	2	2	2	2	2	3
13	2	2	2	2	2	2	3
14	2	2	2	2	3	3	3
15	3	3	3	3	3	3	3
16	3	3	3	3	3	3	3
17	3	3	3	3	3	3	3
18	2	2	2	2	3	2	3
19	2	2	2	2	2	2	2
20	1	1	1	2	2	2	2
21	1	1	1	1	2	1	2
22	1	1	1	1	1	1	1
23	1	1	1	1	1	1	1

WINTER SEAS. DECEMBER 1 THRU February 28

HR/DAY	MON	TUES	WEDS	THUR	FRI	SAT	SUN
0	1	1	1	1	1	1	1
1	1	1	1	1	1	1	1
2	1	1	1	1	1	1	1
3	1	1	1	1	1	1	1
4	1	1	1	1	1	1	1
5	1	1	1	1	1	1	1
6	2	2	2	2	2	1	1
7	3	3	3	3	3	1	1
8	2	3	3	2	2	1	1
9	2	2	2	2	2	2	1
10	2	2	2	2	2	2	2
11	2	2	2	2	2	2	2
12	2	2	2	2	2	2	2
13	2	2	2	2	2	2	2
14	2	2	2	2	3	2	2
15	2	2	2	2	3	2	2
16	2	2	3	3	3	2	2
17	2	2	2	2	3	2	2
18	2	2	2	2	2	2	2
19	1	1	1	2	2	2	2
20	1	1	1	1	2	1	1
21	1	1	1	1	1	1	1
22	1	1	1	1	1	1	1
23	1	1	1	1	1	1	1

I-90 EASTBOUND INTERCHANGES 45 TO 44 (1,150 VEH/HR/LANE)

LANES REQUIRED TO BE OPEN BY HOUR AND TIME OF DAY

SPRING SEASON MARCH 1 THRU MAY 20

HR/DAY	MON	TUES	WEDS	THUR	FRI	SAT	SUN
0	1	1	1	1	1	1	1
1	1	1	1	1	1	1	1
2	1	1	1	1	1	1	1
3	1	1	1	1	1	1	1
4	1	1	1	1	1	1	1
5	1	1	1	1	1	1	1
6	2	1	1	2	1	1	1
7	2	2	2	2	2	2	1
8	2	2	2	2	2	2	1
9	2	2	2	2	2	2	2
10	2	2	2	2	2	2	2
11	2	2	2	2	3	3	3
12	2	2	2	2	3	3	3
13	2	2	2	2	3	2	3
14	2	2	2	2	3	2	3
15	3	2	3	3	3	2	3
16	3	3	3	3	3	2	3
17	3	3	3	3	3	2	2
18	2	2	2	2	3	2	2
19	2	1	2	2	2	2	2
20	1	1	1	2	2	2	2
21	1	1	1	1	2	1	1
22	1	1	1	1	1	1	1
23	1	1	1	1	1	1	1

SUMMER SEASON MAY 21 THRU SEPTEMBER 15

HR/DAY	MON	TUES	WEDS	THUR	FRI	SAT	SUN
0	1	1	1	1	1	1	1
1	1	1	1	1	1	1	1
2	1	1	1	1	1	1	1
3	1	1	1	1	1	1	1
4	1	1	1	1	1	1	1
5	1	1	1	1	1	1	1
6	2	1	2	2	2	1	1
7	2	2	2	2	2	2	1
8	2	2	2	2	2	2	2
9	2	2	2	2	3	3	2
10	2	2	2	3	3	3	3
11	3	2	2	3	3	3	3
12	3	2	2	3	3	3	3
13	3	2	2	3	3	3	3
14	3	2	3	3	3	3	3
15	3	3	3	3	3	3	3
16	3	3	3	3	3	3	3
17	3	3	3	3	3	2	3
18	2	2	3	3	3	2	2
19	2	2	2	2	2	2	2
20	2	2	2	2	2	2	2
21	1	1	1	2	2	2	1
22	1	1	1	1	1	1	1
23	1	1	1	1	1	1	1

LANES REQUIRED TO BE OPEN BY HOUR AND TIME OF DAY

FALL SEASON SEPTEMBER 16 THRU November 30

HR/DAY	MON	TUES	WEDS	THUR	FRI	SAT	SUN
0	1	1	1	1	1	1	1
1	1	1	1	1	1	1	1
2	1	1	1	1	1	1	1
3	1	1	1	1	1	1	1
4	1	1	1	1	1	1	1
5	1	1	1	1	1	1	1
6	1	1	1	2	2	1	1
7	2	2	2	2	2	1	1
8	2	2	2	2	2	2	1
9	2	2	2	2	2	2	2
10	2	2	2	2	2	2	2
11	2	2	2	2	3	3	3
12	2	2	2	2	3	3	3
13	2	2	2	2	3	3	3
14	2	3	2	2	3	2	3
15	3	3	3	3	3	2	3
16	3	3	3	3	3	2	3
17	3	3	3	3	3	2	3
18	2	2	2	2	3	2	2
19	2	2	2	2	2	2	2
20	1	1	1	2	2	1	2
21	1	1	1	1	1	1	1
22	1	1	1	1	1	1	1
23	1	1	1	1	1	1	1

WINTER SEAS. DECEMBER 1 THRU February 28

HR/DAY	MON	TUES	WEDS	THUR	FRI	SAT	SUN
0	1	1	1	1	1	1	1
1	1	1	1	1	1	1	1
2	1	1	1	1	1	1	1
3	1	1	1	1	1	1	1
4	1	1	1	1	1	1	1
5	1	1	1	1	1	1	1
6	1	1	1	1	1	1	1
7	1	1	2	2	2	1	1
8	2	2	2	2	2	1	1
9	2	2	2	2	2	2	1
10	2	2	2	2	2	2	2
11	2	2	2	2	2	2	2
12	2	2	2	2	2	2	2
13	2	2	2	2	2	2	2
14	2	2	2	2	3	2	2
15	2	2	3	3	3	2	2
16	3	3	3	3	3	2	2
17	3	3	3	3	3	2	2
18	2	2	2	2	2	2	2
19	1	2	2	2	2	1	2
20	1	1	1	1	2	1	1
21	1	1	1	1	1	1	1
22	1	1	1	1	1	1	1
23	1	1	1	1	1	1	1

NOTES:

1) THE NEW YORK STATE THRUWAY IS A LIMITED ACCESS, HIGH-SPEED, HIGH-VOLUME HIGHWAY. TRAFFIC SHALL BE MAINTAINED IN ACCORDANCE WITH THE *MANUAL ON UNIFORM TRAFFIC CONTROL DEVICES (MUTCD)*, THE *WORK ZONE TRAFFIC CONTROL PLANS*, AND THE *STANDARD SPECIFICATIONS* SECTION 619 AS AMENDED BY THE AUTHORITY.

2) LANE CLOSURES ON THE THRUWAY SHALL ONLY BE ALLOWED IN ACCORDANCE WITH THESE TRAFFIC MANAGEMENT TABLE(S), UNLESS INDICATED OTHERWISE IN THE CONTRACT PLANS OR PROPOSAL DOCUMENTS.

3) LANE CLOSURE CHARTS SHALL APPLY AS FOLLOWS:

- 1,150 VEH/HR/LANE: APPLIES TO ALL WORK REQUIRING LANE CLOSURE(S) EXCEPT AS PERMITTED BELOW.

- 1,300 VEH/HR/LANE: APPLIES TO NON-EVASIVE WORK WHERE WORKERS AND/OR EQUIPMENT ARE LOCATED 4 FT. OR MORE FROM TRAVEL (SPACE) LANE, OR AS APPROVED BY THE THRUWAY PROJECT ENGINEER. WORK SHOULD BE ABLE TO BE IMMEDIATELY STOPPED AND LANE CLOSURE(S) REMOVED IN THE EVENT QUEUES, GREATER THAN 1 MILE, DEVELOP.

NEW YORK STATE OF OPPORTUNITY. Thruway Authority

U.S. CUSTOMARY STANDARD SHEET

LANE CLOSURE CHARTS
1,150 VEHICLES PER HOUR
SYRACUSE DIVISION
(SHEET 18 OF 18)

APPROVED SEPTEMBER 1, 2018

/S/ PATRICK THOMPSON, P.E.
DIRECTOR DESIGN SUPPORT SERVICES BUREAU

ISSUED UNDER DB 18-003

TA 619-32

I-90 WESTBOUND INTERCHANGES 45 TO 46 (1,150 VEH/HR/LANE)

LANES REQUIRED TO BE OPEN BY HOUR AND TIME OF DAY

SPRING SEASON MARCH 1 THRU MAY 20

HR/DAY	MON	TUES	WEDS	THUR	FRI	SAT	SUN
0	1	1	1	1	1	1	1
1	1	1	1	1	1	1	1
2	1	1	1	1	1	1	1
3	1	1	1	1	1	1	1
4	1	1	1	1	1	1	1
5	1	1	1	1	1	1	1
6	1	1	1	1	1	1	1
7	2	2	2	2	2	1	1
8	2	1	1	1	1	1	1
9	1	1	1	1	1	1	1
10	1	1	1	1	2	2	1
11	1	1	1	1	2	2	1
12	2	1	1	1	2	2	1
13	2	1	1	1	2	2	1
14	2	1	1	2	2	1	2
15	2	1	2	2	2	1	2
16	2	2	2	2	2	1	2
17	2	2	2	2	2	1	2
18	1	1	1	1	2	1	2
19	1	1	1	1	1	1	1
20	1	1	1	1	1	1	1
21	1	1	1	1	1	1	1
22	1	1	1	1	1	1	1
23	1	1	1	1	1	1	1

SUMMER SEASON MAY 21 THRU SEPTEMBER 15

HR/DAY	MON	TUES	WEDS	THUR	FRI	SAT	SUN
0	1	1	1	1	1	1	1
1	1	1	1	1	1	1	1
2	1	1	1	1	1	1	1
3	1	1	1	1	1	1	1
4	1	1	1	1	1	1	1
5	1	1	1	1	1	1	1
6	1	1	1	1	1	1	1
7	2	2	2	2	2	1	1
8	2	2	2	2	2	1	1
9	2	2	2	2	2	2	1
10	2	2	2	2	2	2	2
11	2	2	2	2	2	2	2
12	2	2	2	2	2	2	2
13	2	2	2	2	2	2	2
14	2	2	2	2	2	2	2
15	2	2	2	2	2	2	2
16	2	2	2	2	2	2	2
17	2	2	2	2	2	2	2
18	2	1	1	2	2	2	2
19	2	1	1	1	2	1	2
20	1	1	1	1	1	1	2
21	1	1	1	1	1	1	1
22	1	1	1	1	1	1	1
23	1	1	1	1	1	1	1

LANES REQUIRED TO BE OPEN BY HOUR AND TIME OF DAY

FALL SEASON SEPTEMBER 16 THRU November 30

HR/DAY	MON	TUES	WEDS	THUR	FRI	SAT	SUN
0	1	1	1	1	1	1	1
1	1	1	1	1	1	1	1
2	1	1	1	1	1	1	1
3	1	1	1	1	1	1	1
4	1	1	1	1	1	1	1
5	1	1	1	1	1	1	1
6	1	1	1	1	1	1	1
7	2	2	2	2	2	1	1
8	1	2	2	2	2	1	1
9	1	1	1	1	1	1	1
10	1	1	1	1	1	2	2
11	1	1	1	1	2	2	2
12	2	1	1	1	2	2	2
13	2	1	2	1	2	2	2
14	2	2	2	2	2	2	2
15	2	2	2	2	2	2	2
16	2	2	2	2	2	2	2
17	2	2	2	2	2	2	2
18	1	1	1	1	2	1	2
19	1	1	1	1	1	1	2
20	1	1	1	1	1	1	1
21	1	1	1	1	1	1	1
22	1	1	1	1	1	1	1
23	1	1	1	1	1	1	1

WINTER SEAS. DECEMBER 1 THRU February 28

HR/DAY	MON	TUES	WEDS	THUR	FRI	SAT	SUN
0	1	1	1	1	1	1	1
1	1	1	1	1	1	1	1
2	1	1	1	1	1	1	1
3	1	1	1	1	1	1	1
4	1	1	1	1	1	1	1
5	1	1	1	1	1	1	1
6	1	1	1	1	1	1	1
7	2	2	2	2	2	1	1
8	1	2	2	2	1	1	1
9	1	1	1	1	1	1	1
10	1	1	1	1	1	1	1
11	1	1	1	1	1	1	1
12	1	1	1	1	1	1	1
13	1	1	1	1	2	1	1
14	1	1	1	1	2	1	1
15	2	1	1	2	2	1	2
16	2	1	1	2	2	1	1
17	1	1	1	1	2	1	1
18	1	1	1	1	1	1	1
19	1	1	1	1	1	1	1
20	1	1	1	1	1	1	1
21	1	1	1	1	1	1	1
22	1	1	1	1	1	1	1
23	1	1	1	1	1	1	1

I-90 EASTBOUND INTERCHANGES 46 TO 45 (1,150 VEH/HR/LANE)

LANES REQUIRED TO BE OPEN BY HOUR AND TIME OF DAY

SPRING SEASON MARCH 1 THRU MAY 20

HR/DAY	MON	TUES	WEDS	THUR	FRI	SAT	SUN
0	1	1	1	1	1	1	1
1	1	1	1	1	1	1	1
2	1	1	1	1	1	1	1
3	1	1	1	1	1	1	1
4	1	1	1	1	1	1	1
5	1	1	1	1	1	1	1
6	1	1	1	1	1	1	1
7	1	1	1	1	1	1	1
8	1	1	1	1	1	1	1
9	1	1	1	1	2	1	1
10	1	1	1	1	2	2	1
11	2	1	1	1	2	2	2
12	2	1	1	1	2	2	2
13	2	1	1	2	2	1	2
14	2	1	2	2	2	2	2
15	2	2	2	2	2	2	2
16	2	2	2	2	2	2	2
17	2	2	2	2	2	1	2
18	1	1	1	1	2	1	1
19	1	1	1	1	1	1	1
20	1	1	1	1	1	1	1
21	1	1	1	1	1	1	1
22	1	1	1	1	1	1	1
23	1	1	1	1	1	1	1

SUMMER SEASON MAY 21 THRU SEPTEMBER 15

HR/DAY	MON	TUES	WEDS	THUR	FRI	SAT	SUN
0	1	1	1	1	1	1	1
1	1	1	1	1	1	1	1
2	1	1	1	1	1	1	1
3	1	1	1	1	1	1	1
4	1	1	1	1	1	1	1
5	1	1	1	1	1	1	1
6	1	1	1	1	1	1	1
7	1	1	1	1	1	1	1
8	1	1	1	1	2	1	1
9	2	1	1	2	2	2	2
10	2	2	2	2	2	2	2
11	2	2	2	2	2	2	2
12	2	2	2	2	2	2	2
13	2	2	2	2	2	2	2
14	2	2	2	2	2	2	2
15	2	2	2	2	2	2	2
16	2	2	2	2	2	2	2
17	2	2	2	2	2	2	2
18	1	1	2	2	2	1	2
19	1	1	1	1	2	1	2
20	1	1	1	1	1	1	1
21	1	1	1	1	1	1	1
22	1	1	1	1	1	1	1
23	1	1	1	1	1	1	1

LANES REQUIRED TO BE OPEN BY HOUR AND TIME OF DAY

FALL SEASON SEPTEMBER 16 THRU November 30

HR/DAY	MON	TUES	WEDS	THUR	FRI	SAT	SUN
0	1	1	1	1	1	1	1
1	1	1	1	1	1	1	1
2	1	1	1	1	1	1	1
3	1	1	1	1	1	1	1
4	1	1	1	1	1	1	1
5	1	1	1	1	1	1	1
6	1	1	1	1	1	1	1
7	1	1	1	1	1	1	1
8	1	1	1	1	1	1	1
9	1	1	1	1	2	1	1
10	2	1	1	1	2	2	2
11	2	1	1	1	2	2	2
12	2	2	2	1	2	2	2
13	2	2	2	1	2	2	2
14	2	2	2	2	2	2	2
15	2	2	2	2	2	2	2
16	2	2	2	2	2	2	2
17	2	2	2	2	2	1	2
18	1	1	1	1	2	1	2
19	1	1	1	1	1	1	2
20	1	1	1	1	1	1	1
21	1	1	1	1	1	1	1
22	1	1	1	1	1	1	1
23	1	1	1	1	1	1	1

WINTER SEAS. DECEMBER 1 THRU February 28

HR/DAY	MON	TUES	WEDS	THUR	FRI	SAT	SUN
0	1	1	1	1	1	1	1
1	1	1	1	1	1	1	1
2	1	1	1	1	1	1	1
3	1	1	1	1	1	1	1
4	1	1	1	1	1	1	1
5	1	1	1	1	1	1	1
6	1	1	1	1	1	1	1
7	1	1	1	1	1	1	1
8	1	1	1	1	1	1	1
9	1	1	1	1	1	1	1
10	1	1	1	1	1	1	1
11	1	1	1	1	2	1	1
12	1	1	1	1	2	1	2
13	1	1	1	1	2	1	2
14	1	1	1	1	2	1	2
15	2	2	2	2	2	1	2
16	2	2	2	2	2	1	1
17	2	2	2	2	2	1	1
18	1	1	1	1	1	1	1
19	1	1	1	1	1	1	1
20	1	1	1	1	1	1	1
21	1	1	1	1	1	1	1
22	1	1	1	1	1	1	1
23	1	1	1	1	1	1	1

NOTES:

1) THE NEW YORK STATE THRUWAY IS A LIMITED ACCESS, HIGH-SPEED, HIGH-VOLUME HIGHWAY. TRAFFIC SHALL BE MAINTAINED IN ACCORDANCE WITH THE *MANUAL ON UNIFORM TRAFFIC CONTROL DEVICES (MUTCD)*, THE *WORK ZONE TRAFFIC CONTROL PLANS*, AND THE *STANDARD SPECIFICATIONS* SECTION 619 AS AMENDED BY THE AUTHORITY.

2) LANE CLOSURES ON THE THRUWAY SHALL ONLY BE ALLOWED IN ACCORDANCE WITH THESE TRAFFIC MANAGEMENT TABLE(S), UNLESS INDICATED OTHERWISE IN THE CONTRACT PLANS OR PROPOSAL DOCUMENTS.

3) LANE CLOSURE CHARTS SHALL APPLY AS FOLLOWS:

- 1,150 VEH/HR/LANE: APPLIES TO ALL WORK REQUIRING LANE CLOSURE(S) EXCEPT AS PERMITTED BELOW.

- 1,300 VEH/HR/LANE: APPLIES TO NON-EVASIVE WORK WHERE WORKERS AND/OR EQUIPMENT ARE LOCATED 4 FT. OR MORE FROM TRAVEL (SPACE) LANE, OR AS APPROVED BY THE THRUWAY PROJECT ENGINEER. WORK SHOULD BE ABLE TO BE IMMEDIATELY STOPPED AND LANE CLOSURE(S) REMOVED IN THE EVENT QUEUES, GREATER THAN 1 MILE, DEVELOP.

NEW YORK STATE OF OPPORTUNITY. Thruway Authority

U.S. CUSTOMARY STANDARD SHEET

LANE CLOSURE CHARTS
1,150 VEHICLES PER HOUR
BUFFALO DIVISION
(SHEET 1 OF 37)

APPROVED SEPTEMBER 1, 2018

/S/ PATRICK THOMPSON, P.E.
DIRECTOR DESIGN SUPPORT SERVICES BUREAU

ISSUED UNDER DB 18-003

TA 619-33

I-90 WESTBOUND INTERCHANGES 46 TO 47 (1,150 VEH/HR/LANE)

LANES REQUIRED TO BE OPEN BY HOUR AND TIME OF DAY

SPRING SEASON MARCH 1 THRU MAY 20

HR/DAY	MON	TUES	WEDS	THUR	FRI	SAT	SUN
0	1	1	1	1	1	1	1
1	1	1	1	1	1	1	1
2	1	1	1	1	1	1	1
3	1	1	1	1	1	1	1
4	1	1	1	1	1	1	1
5	1	1	1	1	1	1	1
6	1	1	1	1	1	1	1
7	1	1	1	1	1	1	1
8	1	1	1	1	1	1	1
9	1	1	1	1	1	1	1
10	1	1	1	1	1	1	1
11	1	1	1	1	2	2	1
12	1	1	1	1	2	2	1
13	2	1	1	1	2	1	1
14	2	1	1	1	2	1	2
15	2	1	2	2	2	1	2
16	2	2	2	2	2	1	2
17	2	1	2	2	2	1	2
18	1	1	1	1	2	1	2
19	1	1	1	1	1	1	1
20	1	1	1	1	1	1	1
21	1	1	1	1	1	1	1
22	1	1	1	1	1	1	1
23	1	1	1	1	1	1	1

SUMMER SEASON MAY 21 THRU SEPTEMBER 15

HR/DAY	MON	TUES	WEDS	THUR	FRI	SAT	SUN
0	1	1	1	1	1	1	1
1	1	1	1	1	1	1	1
2	1	1	1	1	1	1	1
3	1	1	1	1	1	1	1
4	1	1	1	1	1	1	1
5	1	1	1	1	1	1	1
6	1	1	1	1	1	1	1
7	1	1	1	1	1	1	1
8	1	1	1	1	1	1	1
9	1	1	1	1	2	2	1
10	2	2	1	2	2	2	2
11	2	2	2	2	2	2	2
12	2	2	2	2	2	2	2
13	2	2	2	2	2	2	2
14	2	2	2	2	2	2	2
15	2	2	2	2	2	2	2
16	2	2	2	2	2	2	2
17	2	2	2	2	2	2	2
18	2	1	1	2	2	2	2
19	1	1	1	1	2	1	2
20	1	1	1	1	1	1	2
21	1	1	1	1	1	1	1
22	1	1	1	1	1	1	1
23	1	1	1	1	1	1	1

LANES REQUIRED TO BE OPEN BY HOUR AND TIME OF DAY

FALL SEASON SEPTEMBER 16 THRU November 30

HR/DAY	MON	TUES	WEDS	THUR	FRI	SAT	SUN
0	1	1	1	1	1	1	1
1	1	1	1	1	1	1	1
2	1	1	1	1	1	1	1
3	1	1	1	1	1	1	1
4	1	1	1	1	1	1	1
5	1	1	1	1	1	1	1
6	1	1	1	1	1	1	1
7	1	1	1	1	1	1	1
8	1	1	1	1	1	1	1
9	1	1	1	1	1	1	2
10	1	1	1	1	1	1	2
11	1	1	1	1	2	2	2
12	1	1	1	1	2	2	2
13	2	1	1	1	2	2	2
14	2	2	2	2	2	2	2
15	2	2	2	2	2	2	2
16	2	2	2	2	2	2	2
17	2	2	2	2	2	1	2
18	1	1	1	1	2	1	2
19	1	1	1	1	1	1	2
20	1	1	1	1	1	1	1
21	1	1	1	1	1	1	1
22	1	1	1	1	1	1	1
23	1	1	1	1	1	1	1

WINTER SEAS. DECEMBER 1 THRU February 28

HR/DAY	MON	TUES	WEDS	THUR	FRI	SAT	SUN
0	1	1	1	1	1	1	1
1	1	1	1	1	1	1	1
2	1	1	1	1	1	1	1
3	1	1	1	1	1	1	1
4	1	1	1	1	1	1	1
5	1	1	1	1	1	1	1
6	1	1	1	1	1	1	1
7	1	1	1	1	1	1	1
8	1	1	1	1	1	1	1
9	1	1	1	1	1	1	1
10	1	1	1	1	1	1	1
11	1	1	1	1	1	1	1
12	1	1	1	1	1	1	1
13	1	1	1	1	1	1	1
14	1	1	1	1	2	1	1
15	2	1	1	1	2	1	1
16	2	1	1	2	2	1	1
17	1	1	1	1	2	1	1
18	1	1	1	1	1	1	1
19	1	1	1	1	1	1	1
20	1	1	1	1	1	1	1
21	1	1	1	1	1	1	1
22	1	1	1	1	1	1	1
23	1	1	1	1	1	1	1

I-90 EASTBOUND INTERCHANGES 47 TO 46 (1,150 VEH/HR/LANE)

LANES REQUIRED TO BE OPEN BY HOUR AND TIME OF DAY

SPRING SEASON MARCH 1 THRU MAY 20

HR/DAY	MON	TUES	WEDS	THUR	FRI	SAT	SUN
0	1	1	1	1	1	1	1
1	1	1	1	1	1	1	1
2	1	1	1	1	1	1	1
3	1	1	1	1	1	1	1
4	1	1	1	1	1	1	1
5	1	1	1	1	1	1	1
6	1	1	1	1	1	1	1
7	1	1	1	1	1	1	1
8	1	1	1	1	1	1	1
9	1	1	1	1	1	1	1
10	1	1	1	1	2	1	1
11	2	1	1	1	2	1	2
12	2	1	1	1	2	1	2
13	2	1	1	1	2	1	2
14	2	1	1	1	2	1	2
15	2	1	1	2	2	1	2
16	2	1	2	2	2	1	2
17	1	1	1	2	2	1	2
18	1	1	1	1	2	1	1
19	1	1	1	1	1	1	1
20	1	1	1	1	1	1	1
21	1	1	1	1	1	1	1
22	1	1	1	1	1	1	1
23	1	1	1	1	1	1	1

SUMMER SEASON MAY 21 THRU SEPTEMBER 15

HR/DAY	MON	TUES	WEDS	THUR	FRI	SAT	SUN
0	1	1	1	1	1	1	1
1	1	1	1	1	1	1	1
2	1	1	1	1	1	1	1
3	1	1	1	1	1	1	1
4	1	1	1	1	1	1	1
5	1	1	1	1	1	1	1
6	1	1	1	1	1	1	1
7	1	1	1	1	1	1	1
8	1	1	1	2	2	1	1
9	2	1	2	2	2	2	2
10	2	2	2	2	2	2	2
11	2	2	2	2	2	2	2
12	2	2	2	2	2	2	2
13	2	2	2	2	2	2	2
14	2	2	2	2	2	2	2
15	2	2	2	2	2	2	2
16	2	2	2	2	2	2	2
17	2	2	2	2	2	2	2
18	1	1	1	2	2	1	2
19	1	1	1	1	2	1	2
20	1	1	1	1	1	1	1
21	1	1	1	1	1	1	1
22	1	1	1	1	1	1	1
23	1	1	1	1	1	1	1

LANES REQUIRED TO BE OPEN BY HOUR AND TIME OF DAY

FALL SEASON SEPTEMBER 16 THRU November 30

HR/DAY	MON	TUES	WEDS	THUR	FRI	SAT	SUN
0	1	1	1	1	1	1	1
1	1	1	1	1	1	1	1
2	1	1	1	1	1	1	1
3	1	1	1	1	1	1	1
4	1	1	1	1	1	1	1
5	1	1	1	1	1	1	1
6	1	1	1	1	1	1	1
7	1	1	1	1	1	1	1
8	1	1	1	1	1	1	1
9	1	1	1	1	2	1	1
10	2	1	1	1	2	2	2
11	2	1	1	1	2	2	2
12	2	1	1	1	2	1	2
13	2	1	1	1	2	1	2
14	2	2	1	1	2	1	2
15	2	2	1	2	2	1	2
16	2	2	1	2	2	1	2
17	1	1	1	1	2	1	2
18	1	1	1	1	2	1	2
19	1	1	1	1	1	1	2
20	1	1	1	1	1	1	1
21	1	1	1	1	1	1	1
22	1	1	1	1	1	1	1
23	1	1	1	1	1	1	1

WINTER SEAS. DECEMBER 1 THRU February 28

HR/DAY	MON	TUES	WEDS	THUR	FRI	SAT	SUN
0	1	1	1	1	1	1	1
1	1	1	1	1	1	1	1
2	1	1	1	1	1	1	1
3	1	1	1	1	1	1	1
4	1	1	1	1	1	1	1
5	1	1	1	1	1	1	1
6	1	1	1	1	1	1	1
7	1	1	1	1	1	1	1
8	1	1	1	1	1	1	1
9	1	1	1	1	1	1	1
10	1	1	1	1	1	1	1
11	1	1	1	1	1	1	1
12	1	1	1	1	1	1	2
13	1	1	1	1	1	1	2
14	1	1	1	1	1	1	2
15	1	1	1	1	2	1	2
16	1	1	1	1	2	1	2
17	1	1	1	1	2	1	2
18	1	1	1	1	1	1	1
19	1	1	1	1	1	1	1
20	1	1	1	1	1	1	1
21	1	1	1	1	1	1	1
22	1	1	1	1	1	1	1
23	1	1	1	1	1	1	1

NOTES:

1) THE NEW YORK STATE THRUWAY IS A LIMITED ACCESS, HIGH-SPEED, HIGH-VOLUME HIGHWAY. TRAFFIC SHALL BE MAINTAINED IN ACCORDANCE WITH THE *MANUAL ON UNIFORM TRAFFIC CONTROL DEVICES (MUTCD)*, THE *WORK ZONE TRAFFIC CONTROL PLANS*, AND THE *STANDARD SPECIFICATIONS* SECTION 619 AS AMENDED BY THE AUTHORITY.

2) LANE CLOSURES ON THE THRUWAY SHALL ONLY BE ALLOWED IN ACCORDANCE WITH THESE TRAFFIC MANAGEMENT TABLE(S), UNLESS INDICATED OTHERWISE IN THE CONTRACT PLANS OR PROPOSAL DOCUMENTS.

3) LANE CLOSURE CHARTS SHALL APPLY AS FOLLOWS:

- 1,150 VEH/HR/LANE: APPLIES TO ALL WORK REQUIRING LANE CLOSURE(S) EXCEPT AS PERMITTED BELOW.

- 1,300 VEH/HR/LANE: APPLIES TO NON-EVASIVE WORK WHERE WORKERS AND/OR EQUIPMENT ARE LOCATED 4 FT. OR MORE FROM TRAVEL (SPACE) LANE, OR AS APPROVED BY THE THRUWAY PROJECT ENGINEER. WORK SHOULD BE ABLE TO BE IMMEDIATELY STOPPED AND LANE CLOSURE(S) REMOVED IN THE EVENT QUEUES, GREATER THAN 1 MILE, DEVELOP.

NEW YORK STATE OF OPPORTUNITY. Thruway Authority

U.S. CUSTOMARY STANDARD SHEET

LANE CLOSURE CHARTS
1,150 VEHICLES PER HOUR
BUFFALO DIVISION
(SHEET 2 OF 37)

APPROVED SEPTEMBER 1, 2018

/S/ PATRICK THOMPSON, P.E.
DIRECTOR DESIGN SUPPORT SERVICES BUREAU

ISSUED UNDER DB 18-003

TA 619-33

I-90 WESTBOUND INTERCHANGES 47 TO 48 (1,150 VEH/HR/LANE)

LANES REQUIRED TO BE OPEN BY HOUR AND TIME OF DAY

SPRING SEASON MARCH 1 THRU MAY 20

HR/DAY	MON	TUES	WEDS	THUR	FRI	SAT	SUN
0	1	1	1	1	1	1	1
1	1	1	1	1	1	1	1
2	1	1	1	1	1	1	1
3	1	1	1	1	1	1	1
4	1	1	1	1	1	1	1
5	1	1	1	1	1	1	1
6	1	1	1	1	1	1	1
7	2	1	1	1	1	1	1
8	2	2	2	2	2	1	1
9	2	2	2	2	2	2	1
10	2	2	2	2	2	2	2
11	2	2	2	2	2	2	2
12	2	2	2	2	2	2	2
13	2	2	2	2	2	2	2
14	2	2	2	2	2	2	2
15	2	2	2	2	2	2	2
16	2	2	2	2	2	2	2
17	2	2	2	2	2	2	2
18	2	1	2	2	2	2	2
19	1	1	1	1	2	1	2
20	1	1	1	1	1	1	2
21	1	1	1	1	1	1	1
22	1	1	1	1	1	1	1
23	1	1	1	1	1	1	1

SUMMER SEASON MAY 21 THRU SEPTEMBER 15

HR/DAY	MON	TUES	WEDS	THUR	FRI	SAT	SUN
0	1	1	1	1	1	1	1
1	1	1	1	1	1	1	1
2	1	1	1	1	1	1	1
3	1	1	1	1	1	1	1
4	1	1	1	1	1	1	1
5	1	1	1	1	1	1	1
6	1	1	1	1	1	1	1
7	2	2	2	2	1	1	1
8	2	2	2	2	2	2	1
9	2	2	2	2	2	2	2
10	2	2	2	2	2	2	2
11	2	2	2	2	2	2	2
12	2	2	2	2	2	2	2
13	2	2	2	2	2	2	2
14	2	2	2	2	2	2	2
15	2	2	2	2	2	2	2
16	2	2	2	2	2	2	2
17	2	2	2	2	2	2	2
18	2	2	2	2	2	2	2
19	2	1	1	2	2	2	2
20	1	1	1	1	2	2	2
21	1	1	1	1	1	1	2
22	1	1	1	1	1	1	1
23	1	1	1	1	1	1	1

LANES REQUIRED TO BE OPEN BY HOUR AND TIME OF DAY

FALL SEASON SEPTEMBER 16 THRU November 30

HR/DAY	MON	TUES	WEDS	THUR	FRI	SAT	SUN
0	1	1	1	1	1	1	1
1	1	1	1	1	1	1	1
2	1	1	1	1	1	1	1
3	1	1	1	1	1	1	1
4	1	1	1	1	1	1	1
5	1	1	1	1	1	1	1
6	1	1	1	1	1	1	1
7	1	2	1	2	1	1	1
8	2	2	2	2	2	1	2
9	2	2	2	2	2	2	2
10	2	2	2	2	2	2	2
11	2	2	2	2	2	2	2
12	2	2	2	2	2	2	2
13	2	2	2	2	2	2	2
14	2	2	2	2	2	2	2
15	2	2	2	2	2	2	2
16	2	2	2	2	2	2	2
17	2	2	2	2	2	2	2
18	2	2	2	2	2	2	2
19	1	1	1	1	2	1	2
20	1	1	1	1	1	1	2
21	1	1	1	1	1	1	1
22	1	1	1	1	1	1	1
23	1	1	1	1	1	1	1

WINTER SEAS. DECEMBER 1 THRU February 28

HR/DAY	MON	TUES	WEDS	THUR	FRI	SAT	SUN
0	1	1	1	1	1	1	1
1	1	1	1	1	1	1	1
2	1	1	1	1	1	1	1
3	1	1	1	1	1	1	1
4	1	1	1	1	1	1	1
5	1	1	1	1	1	1	1
6	1	1	1	1	1	1	1
7	1	1	1	1	1	1	1
8	1	2	2	2	1	1	1
9	1	2	2	2	1	1	2
10	1	2	2	2	2	2	2
11	2	2	2	2	2	2	2
12	2	2	2	2	2	2	2
13	2	2	2	2	2	2	2
14	2	2	2	2	2	2	2
15	2	2	2	2	2	2	2
16	2	2	2	2	2	2	2
17	2	2	2	2	2	2	2
18	1	1	1	1	2	1	1
19	1	1	1	1	1	1	1
20	1	1	1	1	1	1	1
21	1	1	1	1	1	1	1
22	1	1	1	1	1	1	1
23	1	1	1	1	1	1	1

I-90 EASTBOUND INTERCHANGES 48 TO 47 (1,150 VEH/HR/LANE)

LANES REQUIRED TO BE OPEN BY HOUR AND TIME OF DAY

SPRING SEASON MARCH 1 THRU MAY 20

HR/DAY	MON	TUES	WEDS	THUR	FRI	SAT	SUN
0	1	1	1	1	1	1	1
1	1	1	1	1	1	1	1
2	1	1	1	1	1	1	1
3	1	1	1	1	1	1	1
4	1	1	1	1	1	1	1
5	1	1	1	1	1	1	1
6	1	1	1	1	1	1	1
7	2	1	1	1	1	1	1
8	2	1	2	2	2	1	1
9	2	1	2	2	2	2	1
10	2	1	2	2	2	2	2
11	2	2	2	2	2	2	2
12	2	2	2	2	2	2	2
13	2	2	2	2	2	2	2
14	2	2	2	2	2	2	2
15	2	2	2	2	2	2	2
16	2	2	2	2	2	2	2
17	2	2	2	2	2	2	2
18	2	1	2	2	2	2	2
19	1	1	1	1	2	1	2
20	1	1	1	1	1	1	2
21	1	1	1	1	1	1	1
22	1	1	1	1	1	1	1
23	1	1	1	1	1	1	1

SUMMER SEASON MAY 21 THRU SEPTEMBER 15

HR/DAY	MON	TUES	WEDS	THUR	FRI	SAT	SUN
0	1	1	1	1	1	1	1
1	1	1	1	1	1	1	1
2	1	1	1	1	1	1	1
3	1	1	1	1	1	1	1
4	1	1	1	1	1	1	1
5	1	1	1	1	1	1	1
6	1	1	1	1	1	1	1
7	2	2	2	2	2	1	1
8	2	2	2	2	2	2	1
9	2	2	2	2	2	2	2
10	2	2	2	2	2	2	2
11	2	2	2	2	2	2	2
12	2	2	2	2	2	2	2
13	2	2	2	2	2	2	2
14	2	2	2	2	2	2	2
15	2	2	2	2	2	2	2
16	2	2	2	2	2	2	2
17	2	2	2	2	2	2	2
18	2	2	2	2	2	2	2
19	1	1	1	2	2	2	2
20	1	1	1	1	2	2	2
21	1	1	1	1	1	1	1
22	1	1	1	1	1	1	1
23	1	1	1	1	1	1	1

LANES REQUIRED TO BE OPEN BY HOUR AND TIME OF DAY

FALL SEASON SEPTEMBER 16 THRU November 30

HR/DAY	MON	TUES	WEDS	THUR	FRI	SAT	SUN
0	1	1	1	1	1	1	1
1	1	1	1	1	1	1	1
2	1	1	1	1	1	1	1
3	1	1	1	1	1	1	1
4	1	1	1	1	1	1	1
5	1	1	1	1	1	1	1
6	1	1	1	1	1	1	1
7	2	2	2	2	2	1	1
8	2	2	1	2	2	1	1
9	2	2	2	2	2	2	1
10	2	2	2	2	2	2	2
11	2	2	2	2	2	2	2
12	2	2	2	2	2	2	2
13	2	2	2	2	2	2	2
14	2	2	2	2	2	2	2
15	2	2	2	2	2	2	2
16	2	2	2	2	2	2	2
17	2	2	2	2	2	2	2
18	2	2	2	2	2	1	2
19	2	1	1	1	2	1	2
20	2	1	1	1	1	1	2
21	1	1	1	1	1	1	1
22	1	1	1	1	1	1	1
23	1	1	1	1	1	1	1

WINTER SEAS. DECEMBER 1 THRU February 28

HR/DAY	MON	TUES	WEDS	THUR	FRI	SAT	SUN
0	1	1	1	1	1	1	1
1	1	1	1	1	1	1	1
2	1	1	1	1	1	1	1
3	1	1	1	1	1	1	1
4	1	1	1	1	1	1	1
5	1	1	1	1	1	1	1
6	1	1	1	1	1	1	1
7	1	1	1	1	1	1	1
8	1	2	1	1	1	1	1
9	1	1	1	1	1	1	1
10	1	1	2	1	2	2	1
11	2	1	2	1	2	2	2
12	2	2	2	2	2	2	2
13	2	2	2	2	2	2	2
14	2	2	2	2	2	2	2
15	2	2	2	2	2	2	2
16	2	2	2	2	2	2	2
17	2	2	2	2	2	1	2
18	1	1	1	1	2	1	2
19	1	1	1	1	1	1	2
20	1	1	1	1	1	1	1
21	1	1	1	1	1	1	1
22	1	1	1	1	1	1	1
23	1	1	1	1	1	1	1

NOTES:

1) THE NEW YORK STATE THRUWAY IS A LIMITED ACCESS, HIGH-SPEED, HIGH-VOLUME HIGHWAY. TRAFFIC SHALL BE MAINTAINED IN ACCORDANCE WITH THE *MANUAL ON UNIFORM TRAFFIC CONTROL DEVICES (MUTCD)*, THE *WORK ZONE TRAFFIC CONTROL PLANS*, AND THE *STANDARD SPECIFICATIONS* SECTION 619 AS AMENDED BY THE AUTHORITY.

2) LANE CLOSURES ON THE THRUWAY SHALL ONLY BE ALLOWED IN ACCORDANCE WITH THESE TRAFFIC MANAGEMENT TABLE(S), UNLESS INDICATED OTHERWISE IN THE CONTRACT PLANS OR PROPOSAL DOCUMENTS.

3) LANE CLOSURE CHARTS SHALL APPLY AS FOLLOWS:

- 1,150 VEH/HR/LANE: APPLIES TO ALL WORK REQUIRING LANE CLOSURE(S) EXCEPT AS PERMITTED BELOW.

- 1,300 VEH/HR/LANE: APPLIES TO NON-EVASIVE WORK WHERE WORKERS AND/OR EQUIPMENT ARE LOCATED 4 FT. OR MORE FROM TRAVEL (SPACE) LANE, OR AS APPROVED BY THE THRUWAY PROJECT ENGINEER. WORK SHOULD BE ABLE TO BE IMMEDIATELY STOPPED AND LANE CLOSURE(S) REMOVED IN THE EVENT QUEUES, GREATER THAN 1 MILE, DEVELOP.

NEW YORK STATE OF OPPORTUNITY. Thruway Authority

U.S. CUSTOMARY STANDARD SHEET

LANE CLOSURE CHARTS
1,150 VEHICLES PER HOUR
BUFFALO DIVISION
(SHEET 3 OF 37)

APPROVED SEPTEMBER 1, 2018

/S/ PATRICK THOMPSON, P.E.
DIRECTOR DESIGN SUPPORT SERVICES BUREAU

ISSUED UNDER DB 18-003

TA 619-33

I-90 WESTBOUND INTERCHANGES 48 TO 48A (1,150 VEH/HR/LANE)

LANES REQUIRED TO BE OPEN BY HOUR AND TIME OF DAY

SPRING SEASON MARCH 1 THRU MAY 20

HR/DAY	MON	TUES	WEDS	THUR	FRI	SAT	SUN
0	1	1	1	1	1	1	1
1	1	1	1	1	1	1	1
2	1	1	1	1	1	1	1
3	1	1	1	1	1	1	1
4	1	1	1	1	1	1	1
5	1	1	1	1	1	1	1
6	1	1	1	1	1	1	1
7	2	2	2	2	1	1	1
8	2	2	2	2	2	1	1
9	2	2	2	2	2	2	1
10	2	2	2	2	2	2	2
11	2	2	2	2	2	2	2
12	2	2	2	2	2	2	2
13	2	2	2	2	2	2	2
14	2	2	2	2	2	2	2
15	2	2	2	2	2	2	2
16	2	2	2	2	2	2	2
17	2	2	2	2	2	2	2
18	2	1	2	2	2	2	2
19	2	1	1	1	2	1	2
20	1	1	1	1	1	1	2
21	1	1	1	1	1	1	1
22	1	1	1	1	1	1	1
23	1	1	1	1	1	1	1

SUMMER SEASON MAY 21 THRU SEPTEMBER 15

HR/DAY	MON	TUES	WEDS	THUR	FRI	SAT	SUN
0	1	1	1	1	1	1	1
1	1	1	1	1	1	1	1
2	1	1	1	1	1	1	1
3	1	1	1	1	1	1	1
4	1	1	1	1	1	1	1
5	1	1	1	1	1	1	1
6	1	1	1	1	1	1	1
7	2	2	2	2	1	1	1
8	2	2	2	2	2	2	1
9	2	2	2	2	2	2	2
10	2	2	2	2	2	2	2
11	2	2	2	2	2	2	2
12	2	2	2	2	2	2	2
13	2	2	2	2	2	2	2
14	2	2	2	2	2	2	2
15	2	2	2	2	2	2	2
16	2	2	2	2	2	2	2
17	2	2	2	2	2	2	2
18	2	2	2	2	2	2	2
19	2	1	2	2	2	2	2
20	2	1	1	1	2	2	2
21	1	1	1	1	1	1	2
22	1	1	1	1	1	1	1
23	1	1	1	1	1	1	1

LANES REQUIRED TO BE OPEN BY HOUR AND TIME OF DAY

FALL SEASON SEPTEMBER 16 THRU November 30

HR/DAY	MON	TUES	WEDS	THUR	FRI	SAT	SUN
0	1	1	1	1	1	1	1
1	1	1	1	1	1	1	1
2	1	1	1	1	1	1	1
3	1	1	1	1	1	1	1
4	1	1	1	1	1	1	1
5	1	1	1	1	1	1	1
6	1	1	1	1	1	1	1
7	2	2	2	2	2	1	1
8	2	2	2	2	2	1	2
9	2	2	2	2	2	2	2
10	2	2	2	2	2	2	2
11	2	2	2	2	2	2	2
12	2	2	2	2	2	2	2
13	2	2	2	2	2	2	2
14	2	2	2	2	2	2	2
15	2	2	2	2	2	2	2
16	2	2	2	2	2	2	2
17	2	2	2	2	2	2	2
18	2	2	2	2	2	2	2
19	1	1	1	1	2	1	2
20	1	1	1	1	1	1	2
21	1	1	1	1	1	1	1
22	1	1	1	1	1	1	1
23	1	1	1	1	1	1	1

WINTER SEAS. DECEMBER 1 THRU February 28

HR/DAY	MON	TUES	WEDS	THUR	FRI	SAT	SUN
0	1	1	1	1	1	1	1
1	1	1	1	1	1	1	1
2	1	1	1	1	1	1	1
3	1	1	1	1	1	1	1
4	1	1	1	1	1	1	1
5	1	1	1	1	1	1	1
6	1	1	1	1	1	1	1
7	1	2	2	2	1	1	1
8	1	2	2	2	1	1	1
9	1	2	2	2	2	1	2
10	2	2	2	2	2	2	2
11	2	2	2	2	2	2	2
12	2	2	2	2	2	2	2
13	2	2	2	2	2	2	2
14	2	2	2	2	2	2	2
15	2	2	2	2	2	2	2
16	2	2	2	2	2	2	2
17	2	2	2	2	2	2	2
18	1	1	1	1	2	1	2
19	1	1	1	1	1	1	1
20	1	1	1	1	1	1	1
21	1	1	1	1	1	1	1
22	1	1	1	1	1	1	1
23	1	1	1	1	1	1	1

I-90 EASTBOUND INTERCHANGES 48A TO 48 (1,150 VEH/HR/LANE)

LANES REQUIRED TO BE OPEN BY HOUR AND TIME OF DAY

SPRING SEASON MARCH 1 THRU MAY 20

HR/DAY	MON	TUES	WEDS	THUR	FRI	SAT	SUN
0	1	1	1	1	1	1	1
1	1	1	1	1	1	1	1
2	1	1	1	1	1	1	1
3	1	1	1	1	1	1	1
4	1	1	1	1	1	1	1
5	1	1	1	1	1	1	1
6	1	1	1	1	1	1	1
7	2	1	2	2	2	1	1
8	2	2	2	2	2	1	1
9	2	2	2	2	2	2	1
10	2	2	2	2	2	2	2
11	2	2	2	2	2	2	2
12	2	2	2	2	2	2	2
13	2	2	2	2	2	2	2
14	2	2	2	2	2	2	2
15	2	2	2	2	2	2	2
16	2	2	2	2	2	2	2
17	2	2	2	2	2	2	2
18	2	1	2	2	2	2	2
19	1	1	1	1	2	1	2
20	1	1	1	1	1	1	2
21	1	1	1	1	1	1	1
22	1	1	1	1	1	1	1
23	1	1	1	1	1	1	1

SUMMER SEASON MAY 21 THRU SEPTEMBER 15

HR/DAY	MON	TUES	WEDS	THUR	FRI	SAT	SUN
0	1	1	1	1	1	1	1
1	1	1	1	1	1	1	1
2	1	1	1	1	1	1	1
3	1	1	1	1	1	1	1
4	1	1	1	1	1	1	1
5	1	1	1	1	1	1	1
6	1	1	1	1	1	1	1
7	2	2	2	2	2	1	1
8	2	2	2	2	2	2	1
9	2	2	2	2	2	2	2
10	2	2	2	2	2	2	2
11	2	2	2	2	2	2	2
12	2	2	2	2	2	2	2
13	2	2	2	2	2	2	2
14	2	2	2	2	2	2	2
15	2	2	2	2	2	2	2
16	2	2	2	2	2	2	2
17	2	2	2	2	2	2	2
18	2	2	2	2	2	2	2
19	1	1	1	2	2	2	2
20	1	1	1	1	2	2	2
21	1	1	1	1	1	2	1
22	1	1	1	1	1	1	1
23	1	1	1	1	1	1	1

LANES REQUIRED TO BE OPEN BY HOUR AND TIME OF DAY

FALL SEASON SEPTEMBER 16 THRU November 30

HR/DAY	MON	TUES	WEDS	THUR	FRI	SAT	SUN
0	1	1	1	1	1	1	1
1	1	1	1	1	1	1	1
2	1	1	1	1	1	1	1
3	1	1	1	1	1	1	1
4	1	1	1	1	1	1	1
5	1	1	1	1	1	1	1
6	1	1	1	1	1	1	1
7	2	2	2	2	2	1	1
8	2	2	2	2	2	2	1
9	2	2	2	2	2	2	2
10	2	2	2	2	2	2	2
11	2	2	2	2	2	2	2
12	2	2	2	2	2	2	2
13	2	2	2	2	2	2	2
14	2	2	2	2	2	2	2
15	2	2	2	2	2	2	2
16	2	2	2	2	2	2	2
17	2	2	2	2	2	2	2
18	2	2	2	2	2	2	2
19	1	1	1	1	2	1	2
20	1	1	1	1	1	1	2
21	1	1	1	1	1	1	1
22	1	1	1	1	1	1	1
23	1	1	1	1	1	1	1

WINTER SEAS. DECEMBER 1 THRU February 28

HR/DAY	MON	TUES	WEDS	THUR	FRI	SAT	SUN
0	1	1	1	1	1	1	1
1	1	1	1	1	1	1	1
2	1	1	1	1	1	1	1
3	1	1	1	1	1	1	1
4	1	1	1	1	1	1	1
5	1	1	1	1	1	1	1
6	1	1	1	1	1	1	1
7	1	2	2	2	1	1	1
8	2	2	2	2	1	1	1
9	1	2	2	2	2	1	1
10	2	2	2	2	2	2	2
11	2	2	2	2	2	2	2
12	2	2	2	2	2	2	2
13	2	2	2	2	2	2	2
14	2	2	2	2	2	2	2
15	2	2	2	2	2	2	2
16	2	2	2	2	2	2	2
17	2	2	2	2	2	2	2
18	1	1	1	1	2	1	2
19	1	1	1	1	1	1	2
20	1	1	1	1	1	1	1
21	1	1	1	1	1	1	1
22	1	1	1	1	1	1	1
23	1	1	1	1	1	1	1

NOTES:

1) THE NEW YORK STATE THRUWAY IS A LIMITED ACCESS, HIGH-SPEED, HIGH-VOLUME HIGHWAY. TRAFFIC SHALL BE MAINTAINED IN ACCORDANCE WITH THE *MANUAL ON UNIFORM TRAFFIC CONTROL DEVICES (MUTCD)*, THE *WORK ZONE TRAFFIC CONTROL PLANS*, AND THE *STANDARD SPECIFICATIONS* SECTION 619 AS AMENDED BY THE AUTHORITY.

2) LANE CLOSURES ON THE THRUWAY SHALL ONLY BE ALLOWED IN ACCORDANCE WITH THESE TRAFFIC MANAGEMENT TABLE(S), UNLESS INDICATED OTHERWISE IN THE CONTRACT PLANS OR PROPOSAL DOCUMENTS.

3) LANE CLOSURE CHARTS SHALL APPLY AS FOLLOWS:

- 1,150 VEH/HR/LANE: APPLIES TO ALL WORK REQUIRING LANE CLOSURE(S) EXCEPT AS PERMITTED BELOW.

- 1,300 VEH/HR/LANE: APPLIES TO NON-EVASIVE WORK WHERE WORKERS AND/OR EQUIPMENT ARE LOCATED 4 FT. OR MORE FROM TRAVEL (SPACE) LANE, OR AS APPROVED BY THE THRUWAY PROJECT ENGINEER. WORK SHOULD BE ABLE TO BE IMMEDIATELY STOPPED AND LANE CLOSURE(S) REMOVED IN THE EVENT QUEUES, GREATER THAN 1 MILE, DEVELOP.

NEW YORK STATE OF OPPORTUNITY. Thruway Authority

U.S. CUSTOMARY STANDARD SHEET

LANE CLOSURE CHARTS
1,150 VEHICLES PER HOUR
BUFFALO DIVISION
(SHEET 4 OF 37)

APPROVED SEPTEMBER 1, 2018

/S/ PATRICK THOMPSON, P.E.
DIRECTOR DESIGN SUPPORT SERVICES BUREAU

ISSUED UNDER DB 18-003

TA 619-33

I-90 WESTBOUND INTERCHANGES 48A TO 49 (1,150 VEH/HR/LANE)

LANES REQUIRED TO BE OPEN BY HOUR AND TIME OF DAY

SPRING SEASON MARCH 1 THRU MAY 20

HR/DAY	MON	TUES	WEDS	THUR	FRI	SAT	SUN
0	1	1	1	1	1	1	1
1	1	1	1	1	1	1	1
2	1	1	1	1	1	1	1
3	1	1	1	1	1	1	1
4	1	1	1	1	1	1	1
5	1	1	1	1	1	1	1
6	1	1	1	1	1	1	1
7	2	2	2	2	1	1	1
8	2	2	2	2	2	1	1
9	2	2	2	2	2	1	1
10	2	2	2	2	2	2	1
11	2	2	2	2	2	2	2
12	2	2	2	2	2	2	2
13	2	2	2	2	2	2	2
14	2	2	2	2	2	2	2
15	2	2	2	2	2	2	2
16	2	2	2	2	2	2	2
17	2	2	2	2	2	2	2
18	2	2	2	2	2	2	2
19	2	1	1	1	2	1	2
20	1	1	1	1	1	1	2
21	1	1	1	1	1	1	1
22	1	1	1	1	1	1	1
23	1	1	1	1	1	1	1

SUMMER SEASON MAY 21 THRU SEPTEMBER 15

HR/DAY	MON	TUES	WEDS	THUR	FRI	SAT	SUN
0	1	1	1	1	1	1	1
1	1	1	1	1	1	1	1
2	1	1	1	1	1	1	1
3	1	1	1	1	1	1	1
4	1	1	1	1	1	1	1
5	1	1	1	1	1	1	1
6	1	1	1	1	1	1	1
7	2	2	2	2	2	1	1
8	2	2	2	2	2	1	1
9	2	2	2	2	2	2	1
10	2	2	2	2	2	2	2
11	2	2	2	2	2	2	2
12	2	2	2	2	2	2	2
13	2	2	2	2	2	2	2
14	2	2	2	2	2	2	2
15	2	2	2	2	2	2	2
16	2	2	2	2	2	2	2
17	2	2	2	2	2	2	2
18	2	2	2	2	2	2	2
19	2	1	2	2	2	2	2
20	2	1	1	1	2	2	2
21	1	1	1	1	1	1	2
22	1	1	1	1	1	1	1
23	1	1	1	1	1	1	1

LANES REQUIRED TO BE OPEN BY HOUR AND TIME OF DAY

FALL SEASON SEPTEMBER 16 THRU November 30

HR/DAY	MON	TUES	WEDS	THUR	FRI	SAT	SUN
0	1	1	1	1	1	1	1
1	1	1	1	1	1	1	1
2	1	1	1	1	1	1	1
3	1	1	1	1	1	1	1
4	1	1	1	1	1	1	1
5	1	1	1	1	1	1	1
6	1	1	1	1	1	1	1
7	2	2	2	2	2	1	1
8	2	2	2	2	2	1	2
9	2	2	2	2	2	1	2
10	2	2	2	2	2	2	2
11	2	2	2	2	2	2	2
12	2	2	2	2	2	2	2
13	2	2	2	2	2	2	2
14	2	2	2	2	2	2	2
15	2	2	2	2	2	2	2
16	2	2	2	2	2	2	2
17	2	2	2	2	2	2	2
18	2	2	2	2	2	2	2
19	2	1	1	1	2	2	2
20	1	1	1	1	1	1	2
21	1	1	1	1	1	1	1
22	1	1	1	1	1	1	1
23	1	1	1	1	1	1	1

WINTER SEAS. DECEMBER 1 THRU February 28

HR/DAY	MON	TUES	WEDS	THUR	FRI	SAT	SUN
0	1	1	1	1	1	1	1
1	1	1	1	1	1	1	1
2	1	1	1	1	1	1	1
3	1	1	1	1	1	1	1
4	1	1	1	1	1	1	1
5	1	1	1	1	1	1	1
6	1	1	1	1	1	1	1
7	2	2	2	2	1	1	1
8	2	2	2	2	2	1	1
9	2	2	2	2	2	1	1
10	2	2	2	2	2	1	2
11	2	2	2	2	2	2	2
12	2	2	2	2	2	2	2
13	2	2	2	2	2	2	2
14	2	2	2	2	2	2	2
15	2	2	2	2	2	2	2
16	2	2	2	2	2	2	2
17	2	2	2	2	2	2	2
18	2	1	1	2	2	1	2
19	1	1	1	1	2	1	1
20	1	1	1	1	1	1	1
21	1	1	1	1	1	1	1
22	1	1	1	1	1	1	1
23	1	1	1	1	1	1	1

I-90 EASTBOUND INTERCHANGES 49 TO 48A (1,150 VEH/HR/LANE)

LANES REQUIRED TO BE OPEN BY HOUR AND TIME OF DAY

SPRING SEASON MARCH 1 THRU MAY 20

HR/DAY	MON	TUES	WEDS	THUR	FRI	SAT	SUN
0	1	1	1	1	1	1	1
1	1	1	1	1	1	1	1
2	1	1	1	1	1	1	1
3	1	1	1	1	1	1	1
4	1	1	1	1	1	1	1
5	1	1	1	1	1	1	1
6	1	1	1	1	1	1	1
7	1	1	1	1	1	1	1
8	1	1	1	2	1	1	1
9	1	1	1	1	2	1	1
10	1	1	1	1	2	2	2
11	2	1	1	1	2	2	2
12	2	1	1	2	2	2	2
13	2	2	2	2	2	2	2
14	2	2	2	2	2	2	2
15	2	2	2	2	2	2	2
16	2	2	2	2	2	2	2
17	2	2	2	2	2	1	2
18	1	1	1	1	2	1	2
19	1	1	1	1	1	1	2
20	1	1	1	1	1	1	1
21	1	1	1	1	1	1	1
22	1	1	1	1	1	1	1
23	1	1	1	1	1	1	1

SUMMER SEASON MAY 21 THRU SEPTEMBER 15

HR/DAY	MON	TUES	WEDS	THUR	FRI	SAT	SUN
0	1	1	1	1	1	1	1
1	1	1	1	1	1	1	1
2	1	1	1	1	1	1	1
3	1	1	1	1	1	1	1
4	1	1	1	1	1	1	1
5	1	1	1	1	1	1	1
6	1	1	1	1	1	1	1
7	1	1	1	1	2	1	1
8	2	2	2	2	2	1	1
9	2	2	2	2	2	2	2
10	2	2	2	2	2	2	2
11	2	2	2	2	2	2	2
12	2	2	2	2	2	2	2
13	2	2	2	2	2	2	2
14	2	2	2	2	2	2	2
15	2	2	2	2	2	2	2
16	2	2	2	2	2	2	2
17	2	2	2	2	2	2	2
18	1	1	2	2	2	1	2
19	1	1	1	1	1	1	2
20	1	1	1	1	1	1	1
21	1	1	1	1	1	1	1
22	1	1	1	1	1	1	1
23	1	1	1	1	1	1	1

LANES REQUIRED TO BE OPEN BY HOUR AND TIME OF DAY

FALL SEASON SEPTEMBER 16 THRU November 30

HR/DAY	MON	TUES	WEDS	THUR	FRI	SAT	SUN
0	1	1	1	1	1	1	1
1	1	1	1	1	1	1	1
2	1	1	1	1	1	1	1
3	1	1	1	1	1	1	1
4	1	1	1	1	1	1	1
5	1	1	1	1	1	1	1
6	1	1	1	1	1	1	1
7	1	1	1	1	1	1	1
8	1	1	1	1	1	1	1
9	2	1	1	1	2	1	1
10	2	1	1	1	2	2	2
11	2	1	1	2	2	2	2
12	2	1	1	2	2	2	2
13	2	2	2	2	2	2	2
14	2	2	2	2	2	2	2
15	2	2	2	2	2	2	2
16	2	2	2	2	2	2	2
17	2	2	2	2	2	1	2
18	1	1	1	1	2	1	2
19	1	1	1	1	1	1	2
20	1	1	1	1	1	1	1
21	1	1	1	1	1	1	1
22	1	1	1	1	1	1	1
23	1	1	1	1	1	1	1

WINTER SEAS. DECEMBER 1 THRU February 28

HR/DAY	MON	TUES	WEDS	THUR	FRI	SAT	SUN
0	1	1	1	1	1	1	1
1	1	1	1	1	1	1	1
2	1	1	1	1	1	1	1
3	1	1	1	1	1	1	1
4	1	1	1	1	1	1	1
5	1	1	1	1	1	1	1
6	1	1	1	1	1	1	1
7	1	1	1	1	1	1	1
8	1	1	1	1	1	1	1
9	1	1	1	1	1	1	1
10	1	1	1	1	1	1	1
11	1	1	1	1	1	1	2
12	1	1	1	1	2	1	2
13	2	1	1	2	2	1	2
14	2	2	2	2	2	1	2
15	2	2	2	2	2	1	2
16	2	2	2	2	2	1	2
17	2	2	2	2	2	1	2
18	1	1	1	1	1	1	2
19	1	1	1	1	1	1	1
20	1	1	1	1	1	1	1
21	1	1	1	1	1	1	1
22	1	1	1	1	1	1	1
23	1	1	1	1	1	1	1

NOTES:

1) THE NEW YORK STATE THRUWAY IS A LIMITED ACCESS, HIGH-SPEED, HIGH-VOLUME HIGHWAY. TRAFFIC SHALL BE MAINTAINED IN ACCORDANCE WITH THE *MANUAL ON UNIFORM TRAFFIC CONTROL DEVICES (MUTCD)*, THE *WORK ZONE TRAFFIC CONTROL PLANS*, AND THE *STANDARD SPECIFICATIONS* SECTION 619 AS AMENDED BY THE AUTHORITY.

2) LANE CLOSURES ON THE THRUWAY SHALL ONLY BE ALLOWED IN ACCORDANCE WITH THESE TRAFFIC MANAGEMENT TABLE(S), UNLESS INDICATED OTHERWISE IN THE CONTRACT PLANS OR PROPOSAL DOCUMENTS.

3) LANE CLOSURE CHARTS SHALL APPLY AS FOLLOWS:

- 1,150 VEH/HR/LANE: APPLIES TO ALL WORK REQUIRING LANE CLOSURE(S) EXCEPT AS PERMITTED BELOW.

- 1,300 VEH/HR/LANE: APPLIES TO NON-EVASIVE WORK WHERE WORKERS AND/OR EQUIPMENT ARE LOCATED 4 FT. OR MORE FROM TRAVEL (SPACE) LANE, OR AS APPROVED BY THE THRUWAY PROJECT ENGINEER. WORK SHOULD BE ABLE TO BE IMMEDIATELY STOPPED AND LANE CLOSURE(S) REMOVED IN THE EVENT QUEUES, GREATER THAN 1 MILE, DEVELOP.

NEW YORK STATE OF OPPORTUNITY. Thruway Authority

U.S. CUSTOMARY STANDARD SHEET

LANE CLOSURE CHARTS
1,150 VEHICLES PER HOUR
BUFFALO DIVISION
(SHEET 5 OF 37)

APPROVED SEPTEMBER 1, 2018

/S/ PATRICK THOMPSON, P.E.
DIRECTOR DESIGN SUPPORT SERVICES BUREAU

ISSUED UNDER DB 18-003

TA 619-33

I-90 WESTBOUND INTERCHANGES 49 TO 50 (1,150 VEH/HR/LANE)

LANES REQUIRED TO BE OPEN BY HOUR AND TIME OF DAY

SPRING SEASON MARCH 1 THRU MAY 20

HR/DAY	MON	TUES	WEDS	THUR	FRI	SAT	SUN
0	1	1	1	1	1	1	1
1	1	1	1	1	1	1	1
2	1	1	1	1	1	1	1
3	1	1	1	1	1	1	1
4	1	1	1	1	1	1	1
5	1	1	1	1	1	1	1
6	2	2	2	2	1	1	1
7	2	2	2	2	2	1	1
8	2	2	2	2	2	2	1
9	2	2	2	2	2	2	1
10	2	2	2	2	2	2	2
11	2	2	2	2	2	2	2
12	2	2	2	2	2	2	2
13	2	2	2	2	2	2	2
14	2	2	2	2	2	2	2
15	2	2	2	2	2	2	2
16	2	2	2	2	2	2	2
17	2	2	2	2	2	2	2
18	2	2	2	2	2	2	2
19	2	2	2	2	2	2	2
20	2	1	2	2	2	1	2
21	1	1	1	1	2	1	2
22	1	1	1	1	1	1	1
23	1	1	1	1	1	1	1

SUMMER SEASON MAY 21 THRU SEPTEMBER 15

HR/DAY	MON	TUES	WEDS	THUR	FRI	SAT	SUN
0	1	1	1	1	1	1	1
1	1	1	1	1	1	1	1
2	1	1	1	1	1	1	1
3	1	1	1	1	1	1	1
4	1	1	1	1	1	1	1
5	1	1	1	1	1	1	1
6	2	2	2	2	2	1	1
7	2	2	2	2	2	1	1
8	2	2	2	2	2	2	1
9	2	2	2	2	2	2	2
10	2	2	2	2	2	2	2
11	2	2	2	2	2	2	2
12	2	2	2	2	2	2	2
13	2	2	2	2	2	2	2
14	2	2	2	2	2	2	2
15	2	2	2	2	2	2	2
16	2	2	2	2	2	2	2
17	2	2	2	2	2	2	2
18	2	2	2	2	2	2	2
19	2	2	2	2	2	2	2
20	2	2	2	2	2	2	2
21	2	1	2	2	2	2	2
22	1	1	1	1	2	2	1
23	1	1	1	1	2	2	1

LANES REQUIRED TO BE OPEN BY HOUR AND TIME OF DAY

FALL SEASON SEPTEMBER 16 THRU November 30

HR/DAY	MON	TUES	WEDS	THUR	FRI	SAT	SUN
0	1	1	1	1	1	1	1
1	1	1	1	1	1	1	1
2	1	1	1	1	1	1	1
3	1	1	1	1	1	1	1
4	1	1	1	1	1	1	1
5	1	1	1	1	1	1	1
6	2	2	2	2	2	1	1
7	2	2	2	2	2	1	1
8	2	2	2	2	2	2	2
9	2	2	2	2	2	2	2
10	2	2	2	2	2	2	2
11	2	2	2	2	2	2	2
12	2	2	2	2	2	2	2
13	2	2	2	2	2	2	2
14	2	2	2	2	2	2	2
15	2	2	2	2	2	2	2
16	2	2	2	2	2	2	2
17	2	2	2	2	2	2	2
18	2	2	2	2	2	2	2
19	2	2	2	2	2	2	2
20	2	2	2	2	2	2	2
21	1	1	1	2	2	1	1
22	1	1	1	1	1	1	1
23	1	1	1	1	1	1	1

WINTER SEAS. DECEMBER 1 THRU February 28

HR/DAY	MON	TUES	WEDS	THUR	FRI	SAT	SUN
0	1	1	1	1	1	1	1
1	1	1	1	1	1	1	1
2	1	1	1	1	1	1	1
3	1	1	1	1	1	1	1
4	1	1	1	1	1	1	1
5	1	1	1	1	1	1	1
6	2	2	2	2	2	1	1
7	2	2	2	2	2	1	1
8	2	2	2	2	2	1	1
9	2	2	2	2	2	2	2
10	2	2	2	2	2	2	2
11	2	2	2	2	2	2	2
12	2	2	2	2	2	2	2
13	2	2	2	2	2	2	2
14	2	2	2	2	2	2	2
15	2	2	2	2	2	2	2
16	2	2	2	2	2	2	2
17	2	2	2	2	2	2	2
18	2	2	2	2	2	2	2
19	2	2	2	2	2	2	2
20	1	1	1	1	2	1	1
21	1	1	1	1	1	1	1
22	1	1	1	1	1	1	1
23	1	1	1	1	1	1	1

I-90 EASTBOUND INTERCHANGES 50 TO 49 (1,150 VEH/HR/LANE)

LANES REQUIRED TO BE OPEN BY HOUR AND TIME OF DAY

SPRING SEASON MARCH 1 THRU MAY 20

HR/DAY	MON	TUES	WEDS	THUR	FRI	SAT	SUN
0	1	1	1	1	1	1	1
1	1	1	1	1	1	1	1
2	1	1	1	1	1	1	1
3	1	1	1	1	1	1	1
4	1	1	1	1	1	1	1
5	1	1	1	1	1	1	1
6	2	2	2	2	2	1	1
7	2	2	2	2	2	1	1
8	2	2	2	2	2	2	1
9	2	2	2	2	2	2	2
10	2	2	2	2	2	2	2
11	2	2	2	2	2	2	2
12	2	2	2	2	2	2	2
13	2	2	2	2	2	2	2
14	2	2	2	2	2	2	2
15	2	2	2	2	2	2	2
16	2	2	2	2	2	2	2
17	2	2	2	2	2	2	2
18	2	2	2	2	2	2	2
19	2	1	2	2	2	2	2
20	1	1	1	1	2	1	2
21	1	1	1	1	1	1	1
22	1	1	1	1	1	1	1
23	1	1	1	1	1	1	1

SUMMER SEASON MAY 21 THRU SEPTEMBER 15

HR/DAY	MON	TUES	WEDS	THUR	FRI	SAT	SUN
0	1	1	1	1	1	1	1
1	1	1	1	1	1	1	1
2	1	1	1	1	1	1	1
3	1	1	1	1	1	1	1
4	1	1	1	1	1	1	1
5	1	1	1	1	1	1	1
6	2	2	2	2	2	1	1
7	2	2	2	2	2	2	1
8	2	2	2	2	2	2	2
9	2	2	2	2	2	2	2
10	2	2	2	2	2	2	2
11	2	2	2	2	2	2	2
12	2	2	2	2	2	2	2
13	2	2	2	2	2	2	2
14	2	2	2	2	2	2	2
15	2	2	2	2	2	2	2
16	2	2	2	2	2	2	2
17	2	2	2	2	2	2	2
18	2	2	2	2	2	2	2
19	2	2	2	2	2	2	2
20	2	2	2	2	2	2	2
21	1	1	1	2	2	2	2
22	1	1	1	1	1	1	1
23	1	1	1	1	1	1	1

LANES REQUIRED TO BE OPEN BY HOUR AND TIME OF DAY

FALL SEASON SEPTEMBER 16 THRU November 30

HR/DAY	MON	TUES	WEDS	THUR	FRI	SAT	SUN
0	1	1	1	1	1	1	1
1	1	1	1	1	1	1	1
2	1	1	1	1	1	1	1
3	1	1	1	1	1	1	1
4	1	1	1	1	1	1	1
5	1	1	1	1	1	1	1
6	2	2	2	2	2	1	1
7	2	2	2	2	2	2	1
8	2	2	2	2	2	2	1
9	2	2	2	2	2	2	2
10	2	2	2	2	2	2	2
11	2	2	2	2	2	2	2
12	2	2	2	2	2	2	2
13	2	2	2	2	2	2	2
14	2	2	2	2	2	2	2
15	2	2	2	2	2	2	2
16	2	2	2	2	2	2	2
17	2	2	2	2	2	2	2
18	2	2	2	2	2	2	2
19	2	2	2	2	2	2	2
20	1	1	1	2	1	1	2
21	1	1	1	1	1	1	1
22	1	1	1	1	1	1	1
23	1	1	1	1	1	1	1

WINTER SEAS. DECEMBER 1 THRU February 28

HR/DAY	MON	TUES	WEDS	THUR	FRI	SAT	SUN
0	1	1	1	1	1	1	1
1	1	1	1	1	1	1	1
2	1	1	1	1	1	1	1
3	1	1	1	1	1	1	1
4	1	1	1	1	1	1	1
5	1	1	1	1	1	1	1
6	2	2	2	2	2	1	1
7	2	2	2	2	2	1	1
8	2	2	2	2	2	2	1
9	2	2	2	2	2	2	2
10	2	2	2	2	2	2	2
11	2	2	2	2	2	2	2
12	2	2	2	2	2	2	2
13	2	2	2	2	2	2	2
14	2	2	2	2	2	2	2
15	2	2	2	2	2	2	2
16	2	2	2	2	2	2	2
17	2	2	2	2	2	2	2
18	2	2	2	2	2	2	2
19	1	1	1	1	2	1	2
20	1	1	1	1	1	1	1
21	1	1	1	1	1	1	1
22	1	1	1	1	1	1	1
23	1	1	1	1	1	1	1

NOTES:

1) THE NEW YORK STATE THRUWAY IS A LIMITED ACCESS, HIGH-SPEED, HIGH-VOLUME HIGHWAY. TRAFFIC SHALL BE MAINTAINED IN ACCORDANCE WITH THE *MANUAL ON UNIFORM TRAFFIC CONTROL DEVICES (MUTCD)*, THE *WORK ZONE TRAFFIC CONTROL PLANS*, AND THE *STANDARD SPECIFICATIONS* SECTION 619 AS AMENDED BY THE AUTHORITY.

2) LANE CLOSURES ON THE THRUWAY SHALL ONLY BE ALLOWED IN ACCORDANCE WITH THESE TRAFFIC MANAGEMENT TABLE(S), UNLESS INDICATED OTHERWISE IN THE CONTRACT PLANS OR PROPOSAL DOCUMENTS.

3) LANE CLOSURE CHARTS SHALL APPLY AS FOLLOWS:

- 1,150 VEH/HR/LANE: APPLIES TO ALL WORK REQUIRING LANE CLOSURE(S) EXCEPT AS PERMITTED BELOW.

- 1,300 VEH/HR/LANE: APPLIES TO NON-EVASIVE WORK WHERE WORKERS AND/OR EQUIPMENT ARE LOCATED 4 FT. OR MORE FROM TRAVEL (SPACE) LANE, OR AS APPROVED BY THE THRUWAY PROJECT ENGINEER. WORK SHOULD BE ABLE TO BE IMMEDIATELY STOPPED AND LANE CLOSURE(S) REMOVED IN THE EVENT QUEUES, GREATER THAN 1 MILE, DEVELOP.

NEW YORK STATE OF OPPORTUNITY. Thruway Authority

U.S. CUSTOMARY STANDARD SHEET

LANE CLOSURE CHARTS
1,150 VEHICLES PER HOUR
BUFFALO DIVISION
(SHEET 6 OF 37)

APPROVED SEPTEMBER 1, 2018

/S/ PATRICK THOMPSON, P.E.
DIRECTOR DESIGN SUPPORT SERVICES BUREAU

ISSUED UNDER DB 18-003

TA 619-33

I-90 WESTBOUND INTERCHANGES 50 TO 50A (1,150 VEH/HR/LANE)

LANES REQUIRED TO BE OPEN BY HOUR AND TIME OF DAY

SPRING SEASON MARCH 1 THRU MAY 20

HR/DAY	MON	TUES	WEDS	THUR	FRI	SAT	SUN
0	1	1	1	1	1	1	1
1	1	1	1	1	1	1	1
2	1	1	1	1	1	1	1
3	1	1	1	1	1	1	1
4	1	1	1	1	1	1	1
5	2	2	2	2	2	1	1
6	3	3	3	3	3	2	1
7	3	3	3	3	3	2	1
8	3	3	3	3	3	3	2
9	3	3	3	3	3	3	3
10	3	3	3	3	3	3	3
11	3	3	3	3	3	3	3
12	3	3	3	3	3	3	3
13	3	3	3	3	3	3	3
14	3	3	3	3	3	3	3
15	3	3	3	3	3	3	3
16	3	3	3	3	3	3	3
17	3	3	3	3	3	3	3
18	3	3	3	3	3	3	3
19	3	3	3	3	3	3	3
20	3	3	3	3	3	2	2
21	2	2	3	3	3	2	2
22	2	2	2	2	2	2	2
23	1	1	1	1	2	2	1

SUMMER SEASON MAY 21 THRU SEPTEMBER 15

HR/DAY	MON	TUES	WEDS	THUR	FRI	SAT	SUN
0	2	1	1	1	1	1	1
1	1	1	1	1	1	1	1
2	1	1	1	1	1	1	1
3	1	1	1	1	1	1	1
4	1	1	1	1	1	1	1
5	2	2	2	2	2	1	1
6	3	3	3	3	3	2	1
7	3	3	3	3	3	2	2
8	3	3	3	3	3	3	2
9	3	3	3	3	3	3	3
10	3	3	3	3	3	3	3
11	3	3	3	3	3	3	3
12	3	3	3	3	3	3	3
13	3	3	3	3	3	3	3
14	3	3	3	3	3	3	3
15	3	3	3	3	3	3	3
16	3	3	3	3	3	3	3
17	3	3	3	3	3	3	3
18	3	3	3	3	3	3	3
19	3	3	3	3	3	3	3
20	3	3	3	3	3	3	3
21	2	2	3	3	3	3	2
22	2	2	2	2	2	2	2
23	1	1	2	2	2	2	1

LANES REQUIRED TO BE OPEN BY HOUR AND TIME OF DAY

FALL SEASON SEPTEMBER 16 THRU November 30

HR/DAY	MON	TUES	WEDS	THUR	FRI	SAT	SUN
0	1	1	1	1	1	1	1
1	1	1	1	1	1	1	1
2	1	1	1	1	1	1	1
3	1	1	1	1	1	1	1
4	1	1	1	1	1	1	1
5	2	2	2	2	2	1	1
6	3	3	3	3	3	2	1
7	3	3	3	3	3	2	2
8	3	3	3	3	3	3	3
9	3	3	3	3	3	3	3
10	3	3	3	3	3	3	3
11	3	3	3	3	3	3	3
12	3	3	3	3	3	3	3
13	3	3	3	3	3	3	3
14	3	3	3	3	3	3	3
15	3	3	3	3	3	3	3
16	3	3	3	3	3	3	3
17	3	3	3	3	3	3	3
18	3	3	3	3	3	3	3
19	3	3	3	3	3	3	3
20	3	3	3	3	3	3	2
21	2	2	3	3	3	2	2
22	2	2	2	2	2	2	1
23	1	1	1	2	2	2	1

WINTER SEAS. DECEMBER 1 THRU February 28

HR/DAY	MON	TUES	WEDS	THUR	FRI	SAT	SUN
0	1	1	1	1	1	1	1
1	1	1	1	1	1	1	1
2	1	1	1	1	1	1	1
3	1	1	1	1	1	1	1
4	1	1	1	1	1	1	1
5	2	2	2	2	2	1	1
6	3	3	3	3	3	2	1
7	3	3	3	3	3	2	1
8	3	3	3	3	3	3	2
9	3	3	3	3	3	3	3
10	3	3	3	3	3	3	3
11	3	3	3	3	3	3	3
12	3	3	3	3	3	3	3
13	3	3	3	3	3	3	3
14	3	3	3	3	3	3	3
15	3	3	3	3	3	3	3
16	3	3	3	3	3	3	3
17	3	3	3	3	3	3	3
18	3	3	3	3	3	3	3
19	3	3	3	3	3	3	2
20	3	3	3	3	3	2	2
21	2	3	3	3	2	2	2
22	2	2	2	2	2	2	2
23	1	1	1	1	2	2	1

I-90 EASTBOUND INTERCHANGES 50A TO 50 (1,150 VEH/HR/LANE)

LANES REQUIRED TO BE OPEN BY HOUR AND TIME OF DAY

SPRING SEASON MARCH 1 THRU MAY 20

HR/DAY	MON	TUES	WEDS	THUR	FRI	SAT	SUN
0	1	1	1	1	1	1	1
1	1	1	1	1	1	1	1
2	1	1	1	1	1	1	1
3	1	1	1	1	1	1	1
4	1	1	1	1	1	1	1
5	1	1	1	1	1	1	1
6	3	3	3	3	3	1	1
7	3	3	3	3	3	2	1
8	3	3	3	3	3	3	2
9	3	3	3	3	3	3	2
10	3	3	3	3	3	3	3
11	3	3	3	3	3	3	3
12	3	3	3	3	3	3	3
13	3	3	3	3	3	3	3
14	3	3	3	3	3	3	3
15	3	3	3	3	3	3	3
16	3	3	3	3	3	3	3
17	3	3	3	3	3	3	3
18	3	3	3	3	3	3	3
19	3	3	3	3	3	3	3
20	2	2	3	3	3	2	2
21	2	2	2	2	2	3	2
22	2	2	2	2	2	2	2
23	1	1	1	1	2	2	1

SUMMER SEASON MAY 21 THRU SEPTEMBER 15

HR/DAY	MON	TUES	WEDS	THUR	FRI	SAT	SUN
0	1	1	1	1	1	1	1
1	1	1	1	1	1	1	1
2	1	1	1	1	1	1	1
3	1	1	1	1	1	1	1
4	1	1	1	1	1	1	1
5	2	2	2	2	2	1	1
6	3	3	3	3	3	2	1
7	3	3	3	3	3	2	1
8	3	3	3	3	3	2	2
9	3	3	3	3	3	3	2
10	3	3	3	3	3	3	3
11	3	3	3	3	3	3	3
12	3	3	3	3	3	3	3
13	3	3	3	3	3	3	3
14	3	3	3	3	3	3	3
15	3	3	3	3	3	3	3
16	3	3	3	3	3	3	3
17	3	3	3	3	3	3	3
18	3	3	3	3	3	3	3
19	3	3	3	3	3	3	3
20	2	3	3	3	3	3	3
21	2	2	2	3	3	3	2
22	2	2	2	2	2	2	2
23	1	1	2	2	2	2	1

LANES REQUIRED TO BE OPEN BY HOUR AND TIME OF DAY

FALL SEASON SEPTEMBER 16 THRU November 30

HR/DAY	MON	TUES	WEDS	THUR	FRI	SAT	SUN
0	1	1	1	1	1	1	1
1	1	1	1	1	1	1	1
2	1	1	1	1	1	1	1
3	1	1	1	1	1	1	1
4	1	1	1	1	1	1	1
5	1	1	1	2	1	1	1
6	3	3	3	3	3	1	1
7	3	3	3	3	3	2	1
8	3	3	3	3	3	2	2
9	3	3	3	3	3	3	2
10	3	3	3	3	3	3	3
11	3	3	3	3	3	3	3
12	3	3	3	3	3	3	3
13	3	3	3	3	3	3	3
14	3	3	3	3	3	3	3
15	3	3	3	3	3	3	3
16	3	3	3	3	3	3	3
17	3	3	3	3	3	3	3
18	3	3	3	3	3	3	3
19	3	3	3	3	3	3	3
20	2	2	2	3	2	2	2
21	2	2	2	2	2	2	2
22	2	2	2	2	2	2	1
23	1	1	1	2	2	2	1

WINTER SEAS. DECEMBER 1 THRU February 28

HR/DAY	MON	TUES	WEDS	THUR	FRI	SAT	SUN
0	1	1	1	1	1	1	1
1	1	1	1	1	1	1	1
2	1	1	1	1	1	1	1
3	1	1	1	1	1	1	1
4	1	1	1	1	1	1	1
5	1	1	1	1	1	1	1
6	3	3	3	3	3	1	1
7	3	3	3	3	3	2	1
8	3	3	3	3	3	2	1
9	3	3	3	3	3	2	2
10	3	3	3	3	3	3	2
11	3	3	3	3	3	3	3
12	3	3	3	3	3	3	3
13	3	3	3	3	3	3	3
14	3	3	3	3	3	3	3
15	3	3	3	3	3	3	3
16	3	3	3	3	3	3	3
17	3	3	3	3	3	3	3
18	3	3	3	3	3	3	3
19	3	3	3	3	3	3	2
20	2	2	2	2	2	2	2
21	2	2	2	2	2	2	2
22	2	2	2	2	2	2	2
23	1	1	1	1	2	2	1

NOTES:

1) THE NEW YORK STATE THRUWAY IS A LIMITED ACCESS, HIGH-SPEED, HIGH-VOLUME HIGHWAY. TRAFFIC SHALL BE MAINTAINED IN ACCORDANCE WITH THE *MANUAL ON UNIFORM TRAFFIC CONTROL DEVICES (MUTCD)*, THE *WORK ZONE TRAFFIC CONTROL PLANS*, AND THE *STANDARD SPECIFICATIONS* SECTION 619 AS AMENDED BY THE AUTHORITY.

2) LANE CLOSURES ON THE THRUWAY SHALL ONLY BE ALLOWED IN ACCORDANCE WITH THESE TRAFFIC MANAGEMENT TABLE(S), UNLESS INDICATED OTHERWISE IN THE CONTRACT PLANS OR PROPOSAL DOCUMENTS.

3) LANE CLOSURE CHARTS SHALL APPLY AS FOLLOWS:

- 1,150 VEH/HR/LANE: APPLIES TO ALL WORK REQUIRING LANE CLOSURE(S) EXCEPT AS PERMITTED BELOW.

- 1,300 VEH/HR/LANE: APPLIES TO NON-EVASIVE WORK WHERE WORKERS AND/OR EQUIPMENT ARE LOCATED 4 FT. OR MORE FROM TRAVEL (SPACE) LANE, OR AS APPROVED BY THE THRUWAY PROJECT ENGINEER. WORK SHOULD BE ABLE TO BE IMMEDIATELY STOPPED AND LANE CLOSURE(S) REMOVED IN THE EVENT QUEUES, GREATER THAN 1 MILE, DEVELOP.

NEW YORK STATE OF OPPORTUNITY. Thruway Authority

U.S. CUSTOMARY STANDARD SHEET

LANE CLOSURE CHARTS
1,150 VEHICLES PER HOUR
BUFFALO DIVISION
(SHEET 7 OF 37)

APPROVED SEPTEMBER 1, 2018

/S/ PATRICK THOMPSON, P.E.
DIRECTOR DESIGN SUPPORT SERVICES BUREAU

ISSUED UNDER DB 18-003

TA 619-33

I-90 WESTBOUND INTERCHANGES 50A TO 51 (1,150 VEH/HR/LANE)

LANES REQUIRED TO BE OPEN BY HOUR AND TIME OF DAY

SPRING SEASON MARCH 1 THRU MAY 20

HR/DAY	MON	TUES	WEDS	THUR	FRI	SAT	SUN
0	1	1	1	1	1	1	1
1	1	1	1	1	1	1	1
2	1	1	1	1	1	1	1
3	1	1	1	1	1	1	1
4	1	1	1	1	1	1	1
5	2	2	2	2	2	1	1
6	3	3	3	3	3	2	1
7	3	3	3	3	3	2	1
8	3	3	3	3	3	3	2
9	3	3	3	3	3	3	3
10	3	3	3	3	3	3	3
11	3	3	3	3	3	3	3
12	3	3	3	3	3	3	3
13	3	3	3	3	3	3	3
14	3	3	3	3	3	3	3
15	3	3	3	3	3	3	3
16	3	3	3	3	3	3	3
17	3	3	3	3	3	3	3
18	3	3	3	3	3	3	3
19	3	3	3	3	3	3	3
20	3	3	3	3	3	2	3
21	2	2	3	3	3	2	2
22	2	2	2	2	2	2	2
23	1	1	1	1	2	2	1

SUMMER SEASON MAY 21 THRU SEPTEMBER 15

HR/DAY	MON	TUES	WEDS	THUR	FRI	SAT	SUN
0	1	1	1	1	1	1	1
1	1	1	1	1	1	1	1
2	1	1	1	1	1	1	1
3	1	1	1	1	1	1	1
4	1	1	1	1	1	1	1
5	2	2	2	2	2	1	1
6	3	3	3	3	3	2	1
7	3	3	3	3	3	2	2
8	3	3	3	3	3	3	2
9	3	3	3	3	3	3	3
10	3	3	3	3	3	3	3
11	3	3	3	3	3	3	3
12	3	3	3	3	3	3	3
13	3	3	3	3	3	3	3
14	3	3	3	3	3	3	3
15	3	3	3	3	3	3	3
16	3	3	3	3	3	3	3
17	3	3	3	3	3	3	3
18	3	3	3	3	3	3	3
19	3	3	3	3	3	3	3
20	3	3	3	3	3	3	3
21	2	3	3	3	3	3	2
22	2	2	2	2	2	2	2
23	2	2	2	2	2	2	1

LANES REQUIRED TO BE OPEN BY HOUR AND TIME OF DAY

FALL SEASON SEPTEMBER 16 THRU November 30

HR/DAY	MON	TUES	WEDS	THUR	FRI	SAT	SUN
0	1	1	1	1	1	1	1
1	1	1	1	1	1	1	1
2	1	1	1	1	1	1	1
3	1	1	1	1	1	1	1
4	1	1	1	1	1	1	1
5	2	2	2	2	2	1	1
6	3	3	3	3	3	2	1
7	3	3	3	3	3	2	2
8	3	3	3	3	3	3	3
9	3	3	3	3	3	3	3
10	3	3	3	3	3	3	3
11	3	3	3	3	3	3	3
12	3	3	3	3	3	3	3
13	3	3	3	3	3	3	3
14	3	3	3	3	3	3	3
15	3	3	3	3	3	3	3
16	3	3	3	3	3	3	3
17	3	3	3	3	3	3	3
18	3	3	3	3	3	3	3
19	3	3	3	3	3	3	3
20	3	3	3	3	3	3	2
21	2	2	3	3	3	2	2
22	2	2	2	2	2	2	1
23	1	1	1	2	2	2	1

WINTER SEAS. DECEMBER 1 THRU February 28

HR/DAY	MON	TUES	WEDS	THUR	FRI	SAT	SUN
0	1	1	1	1	1	1	1
1	1	1	1	1	1	1	1
2	1	1	1	1	1	1	1
3	1	1	1	1	1	1	1
4	1	1	1	1	1	1	1
5	2	2	2	2	2	1	1
6	3	3	3	3	3	1	1
7	3	3	3	3	3	2	1
8	3	3	3	3	3	3	2
9	3	3	3	3	3	3	3
10	3	3	3	3	3	3	3
11	3	3	3	3	3	3	3
12	3	3	3	3	3	3	3
13	3	3	3	3	3	3	3
14	3	3	3	3	3	3	3
15	3	3	3	3	3	3	3
16	3	3	3	3	3	3	3
17	3	3	3	3	3	3	3
18	3	3	3	3	3	3	3
19	3	3	3	3	3	3	2
20	3	3	3	3	3	2	2
21	2	2	3	3	3	2	2
22	2	2	2	2	2	2	2
23	1	1	1	1	2	2	1

I-90 EASTBOUND INTERCHANGES 51 TO 50A (1,150 VEH/HR/LANE)

LANES REQUIRED TO BE OPEN BY HOUR AND TIME OF DAY

SPRING SEASON MARCH 1 THRU MAY 20

HR/DAY	MON	TUES	WEDS	THUR	FRI	SAT	SUN
0	1	1	1	1	1	1	1
1	1	1	1	1	1	1	1
2	1	1	1	1	1	1	1
3	1	1	1	1	1	1	1
4	1	1	1	1	1	1	1
5	2	2	2	2	2	1	1
6	3	3	3	3	3	2	1
7	3	3	3	3	3	2	1
8	3	3	3	3	3	3	2
9	3	3	3	3	3	3	2
10	3	3	3	3	3	3	3
11	3	3	3	3	3	3	3
12	3	3	3	3	3	3	3
13	3	3	3	3	3	3	3
14	3	3	3	3	3	3	3
15	3	3	3	3	3	3	3
16	3	3	3	3	3	3	3
17	3	3	3	3	3	3	3
18	3	3	3	3	3	3	3
19	3	3	3	3	3	3	3
20	3	3	3	3	3	3	3
21	2	2	3	3	3	3	2
22	2	2	2	2	3	3	2
23	1	1	2	2	2	2	1

SUMMER SEASON MAY 21 THRU SEPTEMBER 15

HR/DAY	MON	TUES	WEDS	THUR	FRI	SAT	SUN
0	1	1	1	1	1	2	1
1	1	1	1	1	1	1	1
2	1	1	1	1	1	1	1
3	1	1	1	1	1	1	1
4	1	1	1	1	1	1	1
5	2	2	2	2	2	1	1
6	3	3	3	3	3	2	1
7	3	3	3	3	3	2	2
8	3	3	3	3	3	3	2
9	3	3	3	3	3	3	2
10	3	3	3	3	3	3	3
11	3	3	3	3	3	3	3
12	3	3	3	3	3	3	3
13	3	3	3	3	3	3	3
14	3	3	3	3	3	3	3
15	3	3	3	3	3	3	3
16	3	3	3	3	3	3	3
17	3	3	3	3	3	3	3
18	3	3	3	3	3	3	3
19	3	3	3	3	3	3	3
20	3	3	3	3	3	3	3
21	2	3	3	3	3	3	3
22	2	2	2	3	3	3	2
23	2	2	2	2	2	2	2

LANES REQUIRED TO BE OPEN BY HOUR AND TIME OF DAY

FALL SEASON SEPTEMBER 16 THRU November 30

HR/DAY	MON	TUES	WEDS	THUR	FRI	SAT	SUN
0	1	1	1	1	1	1	1
1	1	1	1	1	1	1	1
2	1	1	1	1	1	1	1
3	1	1	1	1	1	1	1
4	1	1	1	1	1	1	1
5	2	2	2	2	2	1	1
6	3	3	3	3	3	2	1
7	3	3	3	3	3	2	1
8	3	3	3	3	3	3	2
9	3	3	3	3	3	3	2
10	3	3	3	3	3	3	3
11	3	3	3	3	3	3	3
12	3	3	3	3	3	3	3
13	3	3	3	3	3	3	3
14	3	3	3	3	3	3	3
15	3	3	3	3	3	3	3
16	3	3	3	3	3	3	3
17	3	3	3	3	3	3	3
18	3	3	3	3	3	3	3
19	3	3	3	3	3	3	3
20	2	3	3	3	3	3	3
21	2	2	2	3	3	3	2
22	2	2	2	2	3	3	2
23	1	1	2	2	2	2	1

WINTER SEAS. DECEMBER 1 THRU February 28

HR/DAY	MON	TUES	WEDS	THUR	FRI	SAT	SUN
0	1	1	1	1	1	1	1
1	1	1	1	1	1	1	1
2	1	1	1	1	1	1	1
3	1	1	1	1	1	1	1
4	1	1	1	1	1	1	1
5	2	2	2	2	1	1	1
6	3	3	3	3	3	1	1
7	3	3	3	3	3	2	1
8	3	3	3	3	3	2	2
9	3	3	3	3	3	3	2
10	3	3	3	3	3	3	3
11	3	3	3	3	3	3	3
12	3	3	3	3	3	3	3
13	3	3	3	3	3	3	3
14	3	3	3	3	3	3	3
15	3	3	3	3	3	3	3
16	3	3	3	3	3	3	3
17	3	3	3	3	3	3	3
18	3	3	3	3	3	3	3
19	3	3	3	3	3	3	3
20	3	3	3	3	3	2	2
21	2	2	2	3	3	3	2
22	2	2	2	2	3	3	2
23	2	2	2	2	2	2	2

NOTES:

1) THE NEW YORK STATE THRUWAY IS A LIMITED ACCESS, HIGH-SPEED, HIGH-VOLUME HIGHWAY. TRAFFIC SHALL BE MAINTAINED IN ACCORDANCE WITH THE *MANUAL ON UNIFORM TRAFFIC CONTROL DEVICES (MUTCD)*, THE *WORK ZONE TRAFFIC CONTROL PLANS*, AND THE *STANDARD SPECIFICATIONS* SECTION 619 AS AMENDED BY THE AUTHORITY.

2) LANE CLOSURES ON THE THRUWAY SHALL ONLY BE ALLOWED IN ACCORDANCE WITH THESE TRAFFIC MANAGEMENT TABLE(S), UNLESS INDICATED OTHERWISE IN THE CONTRACT PLANS OR PROPOSAL DOCUMENTS.

3) LANE CLOSURE CHARTS SHALL APPLY AS FOLLOWS:

- 1,150 VEH/HR/LANE: APPLIES TO ALL WORK REQUIRING LANE CLOSURE(S) EXCEPT AS PERMITTED BELOW.

- 1,300 VEH/HR/LANE: APPLIES TO NON-EVASIVE WORK WHERE WORKERS AND/OR EQUIPMENT ARE LOCATED 4 FT. OR MORE FROM TRAVEL (SPACE) LANE, OR AS APPROVED BY THE THRUWAY PROJECT ENGINEER. WORK SHOULD BE ABLE TO BE IMMEDIATELY STOPPED AND LANE CLOSURE(S) REMOVED IN THE EVENT QUEUES, GREATER THAN 1 MILE, DEVELOP.

NEW YORK STATE OF OPPORTUNITY. Thruway Authority

U.S. CUSTOMARY STANDARD SHEET

LANE CLOSURE CHARTS
1,150 VEHICLES PER HOUR
BUFFALO DIVISION
(SHEET 8 OF 37)

APPROVED SEPTEMBER 1, 2018

/S/ PATRICK THOMPSON, P.E.
DIRECTOR DESIGN SUPPORT SERVICES BUREAU

ISSUED UNDER DB 18-003

TA 619-33

I-90 WESTBOUND INTERCHANGES 51 TO 52 (1,150 VEH/HR/LANE)

LANES REQUIRED TO BE OPEN BY HOUR AND TIME OF DAY

SPRING SEASON MARCH 1 THRU MAY 20

HR/DAY	MON	TUES	WEDS	THUR	FRI	SAT	SUN
0	1	1	1	1	1	1	1
1	1	1	1	1	1	1	1
2	1	1	1	1	1	1	1
3	1	1	1	1	1	1	1
4	1	1	1	1	1	1	1
5	2	2	2	2	2	1	1
6	3	3	3	3	3	1	1
7	3	3	3	3	3	2	1
8	3	3	3	3	3	3	2
9	3	3	3	3	3	3	2
10	3	3	3	3	3	3	3
11	3	3	3	3	3	3	3
12	3	3	3	3	3	3	3
13	3	3	3	3	3	3	3
14	3	3	3	3	3	3	3
15	3	3	3	3	3	3	3
16	3	3	3	3	3	3	3
17	3	3	3	3	3	3	3
18	3	3	3	3	3	3	3
19	3	3	3	3	3	3	3
20	3	3	3	3	3	3	2
21	2	2	3	3	3	2	2
22	2	2	2	2	2	2	1
23	1	1	1	1	2	2	1

SUMMER SEASON MAY 21 THRU SEPTEMBER 15

HR/DAY	MON	TUES	WEDS	THUR	FRI	SAT	SUN
0	1	1	1	1	1	1	1
1	1	1	1	1	1	1	1
2	1	1	1	1	1	1	1
3	1	1	1	1	1	1	1
4	1	1	1	1	1	1	1
5	2	2	2	2	2	1	1
6	3	3	3	3	3	2	1
7	3	3	3	3	3	2	2
8	3	3	3	3	3	3	2
9	3	3	3	3	3	3	3
10	3	3	3	3	3	3	3
11	3	3	3	3	3	3	3
12	3	3	3	3	3	3	3
13	3	3	3	3	3	3	3
14	3	3	3	3	3	3	3
15	3	3	3	3	3	3	3
16	3	3	3	3	3	3	3
17	3	3	3	3	3	3	3
18	3	3	3	3	3	3	3
19	3	3	3	3	3	3	3
20	3	3	3	3	3	3	2
21	2	3	3	3	3	2	2
22	2	2	2	2	2	2	2
23	2	2	2	2	2	2	1

LANES REQUIRED TO BE OPEN BY HOUR AND TIME OF DAY

FALL SEASON SEPTEMBER 16 THRU November 30

HR/DAY	MON	TUES	WEDS	THUR	FRI	SAT	SUN
0	1	1	1	1	1	1	1
1	1	1	1	1	1	1	1
2	1	1	1	1	1	1	1
3	1	1	1	1	1	1	1
4	1	1	1	1	1	1	1
5	2	2	2	2	2	1	1
6	3	3	3	3	3	1	1
7	3	3	3	3	3	2	2
8	3	3	3	3	3	3	3
9	3	3	3	3	3	3	3
10	3	3	3	3	3	3	3
11	3	3	3	3	3	3	3
12	3	3	3	3	3	3	3
13	3	3	3	3	3	3	3
14	3	3	3	3	3	3	3
15	3	3	3	3	3	3	3
16	3	3	3	3	3	3	3
17	3	3	3	3	3	3	3
18	3	3	3	3	3	3	3
19	3	3	3	3	3	3	3
20	3	3	3	3	3	2	2
21	2	2	3	3	3	2	2
22	2	2	2	2	2	2	1
23	1	1	1	2	2	2	1

WINTER SEAS. DECEMBER 1 THRU February 28

HR/DAY	MON	TUES	WEDS	THUR	FRI	SAT	SUN
0	1	1	1	1	1	1	1
1	1	1	1	1	1	1	1
2	1	1	1	1	1	1	1
3	1	1	1	1	1	1	1
4	1	1	1	1	1	1	1
5	1	2	2	2	1	1	1
6	3	3	3	3	3	1	1
7	3	3	3	3	3	2	1
8	3	3	3	3	3	3	2
9	3	3	3	3	3	3	3
10	3	3	3	3	3	3	3
11	3	3	3	3	3	3	3
12	3	3	3	3	3	3	3
13	3	3	3	3	3	3	3
14	3	3	3	3	3	3	3
15	3	3	3	3	3	3	3
16	3	3	3	3	3	3	3
17	3	3	3	3	3	3	3
18	3	3	3	3	3	3	3
19	3	3	3	3	3	3	2
20	3	3	3	3	3	2	2
21	2	2	3	2	2	2	2
22	2	2	2	2	2	2	2
23	1	1	1	1	2	2	1

I-90 EASTBOUND INTERCHANGES 52 TO 51 (1,150 VEH/HR/LANE)

LANES REQUIRED TO BE OPEN BY HOUR AND TIME OF DAY

SPRING SEASON MARCH 1 THRU MAY 20

HR/DAY	MON	TUES	WEDS	THUR	FRI	SAT	SUN
0	1	1	1	1	1	1	1
1	1	1	1	1	1	1	1
2	1	1	1	1	1	1	1
3	1	1	1	1	1	1	1
4	1	1	1	1	1	1	1
5	2	2	2	2	2	1	1
6	3	3	3	3	3	2	1
7	3	3	3	3	3	2	1
8	3	3	3	3	3	3	2
9	3	3	3	3	3	3	2
10	3	3	3	3	3	3	3
11	3	3	3	3	3	3	3
12	3	3	3	3	3	3	3
13	3	3	3	3	3	3	3
14	3	3	3	3	3	3	3
15	3	3	3	3	3	3	3
16	3	3	3	3	3	3	3
17	3	3	3	3	3	3	3
18	3	3	3	3	3	3	3
19	3	3	3	3	3	3	3
20	3	3	3	3	3	3	3
21	2	2	3	3	3	3	2
22	2	2	2	2	2	2	2
23	1	1	1	2	2	2	1

SUMMER SEASON MAY 21 THRU SEPTEMBER 15

HR/DAY	MON	TUES	WEDS	THUR	FRI	SAT	SUN
0	1	1	1	1	1	1	1
1	1	1	1	1	1	1	1
2	1	1	1	1	1	1	1
3	1	1	1	1	1	1	1
4	1	1	1	1	1	1	1
5	2	2	2	2	2	1	1
6	3	3	3	3	3	2	1
7	3	3	3	3	3	2	1
8	3	3	3	3	3	3	2
9	3	3	3	3	3	3	2
10	3	3	3	3	3	3	3
11	3	3	3	3	3	3	3
12	3	3	3	3	3	3	3
13	3	3	3	3	3	3	3
14	3	3	3	3	3	3	3
15	3	3	3	3	3	3	3
16	3	3	3	3	3	3	3
17	3	3	3	3	3	3	3
18	3	3	3	3	3	3	3
19	3	3	3	3	3	3	3
20	3	3	3	3	3	3	3
21	2	3	3	3	3	3	3
22	2	2	2	3	3	3	2
23	2	2	2	2	2	2	1

LANES REQUIRED TO BE OPEN BY HOUR AND TIME OF DAY

FALL SEASON SEPTEMBER 16 THRU November 30

HR/DAY	MON	TUES	WEDS	THUR	FRI	SAT	SUN
0	1	1	1	1	2	1	1
1	1	1	1	1	1	1	1
2	1	1	1	1	1	1	1
3	1	1	1	1	1	1	1
4	1	1	1	1	1	1	1
5	2	2	2	2	2	1	1
6	3	3	3	3	3	2	1
7	3	3	3	3	3	2	1
8	3	3	3	3	3	3	2
9	3	3	3	3	3	3	2
10	3	3	3	3	3	3	3
11	3	3	3	3	3	3	3
12	3	3	3	3	3	3	3
13	3	3	3	3	3	3	3
14	3	3	3	3	3	3	3
15	3	3	3	3	3	3	3
16	3	3	3	3	3	3	3
17	3	3	3	3	3	3	3
18	3	3	3	3	3	3	3
19	3	3	3	3	3	3	3
20	2	2	3	3	3	3	3
21	2	2	2	2	3	3	2
22	2	2	2	2	2	2	2
23	1	1	1	2	2	2	1

WINTER SEAS. DECEMBER 1 THRU February 28

HR/DAY	MON	TUES	WEDS	THUR	FRI	SAT	SUN
0	1	1	1	1	1	1	1
1	1	1	1	1	1	1	1
2	1	1	1	1	1	1	1
3	1	1	1	1	1	1	1
4	1	1	1	1	1	1	1
5	2	2	2	2	2	1	1
6	3	3	3	3	3	1	1
7	3	3	3	3	3	2	1
8	3	3	3	3	3	2	2
9	3	3	3	3	3	3	2
10	3	3	3	3	3	3	2
11	3	3	3	3	3	3	3
12	3	3	3	3	3	3	3
13	3	3	3	3	3	3	3
14	3	3	3	3	3	3	3
15	3	3	3	3	3	3	3
16	3	3	3	3	3	3	3
17	3	3	3	3	3	3	3
18	3	3	3	3	3	3	3
19	3	3	3	3	3	3	3
20	2	2	3	3	3	2	2
21	2	2	2	2	3	3	2
22	2	2	2	2	3	2	2
23	1	1	1	2	2	2	1

NOTES:

1) THE NEW YORK STATE THRUWAY IS A LIMITED ACCESS, HIGH-SPEED, HIGH-VOLUME HIGHWAY. TRAFFIC SHALL BE MAINTAINED IN ACCORDANCE WITH THE *MANUAL ON UNIFORM TRAFFIC CONTROL DEVICES (MUTCD)*, THE *WORK ZONE TRAFFIC CONTROL PLANS*, AND THE *STANDARD SPECIFICATIONS* SECTION 619 AS AMENDED BY THE AUTHORITY.

2) LANE CLOSURES ON THE THRUWAY SHALL ONLY BE ALLOWED IN ACCORDANCE WITH THESE TRAFFIC MANAGEMENT TABLE(S), UNLESS INDICATED OTHERWISE IN THE CONTRACT PLANS OR PROPOSAL DOCUMENTS.

3) LANE CLOSURE CHARTS SHALL APPLY AS FOLLOWS:

- 1,150 VEH/HR/LANE: APPLIES TO ALL WORK REQUIRING LANE CLOSURE(S) EXCEPT AS PERMITTED BELOW.

- 1,300 VEH/HR/LANE: APPLIES TO NON-EVASIVE WORK WHERE WORKERS AND/OR EQUIPMENT ARE LOCATED 4 FT. OR MORE FROM TRAVEL (SPACE) LANE, OR AS APPROVED BY THE THRUWAY PROJECT ENGINEER. WORK SHOULD BE ABLE TO BE IMMEDIATELY STOPPED AND LANE CLOSURE(S) REMOVED IN THE EVENT QUEUES, GREATER THAN 1 MILE, DEVELOP.

NEW YORK STATE OF OPPORTUNITY. Thruway Authority

U.S. CUSTOMARY STANDARD SHEET

LANE CLOSURE CHARTS
1,150 VEHICLES PER HOUR
BUFFALO DIVISION
(SHEET 9 OF 37)

APPROVED SEPTEMBER 1, 2018

/S/ PATRICK THOMPSON, P.E.
DIRECTOR DESIGN SUPPORT SERVICES BUREAU

ISSUED UNDER DB 18-003

TA 619-33

I-90 WESTBOUND INTERCHANGES 52 TO 52A (1,150 VEH/HR/LANE)

LANES REQUIRED TO BE OPEN BY HOUR AND TIME OF DAY

SPRING SEASON MARCH 1 THRU MAY 20

HR/DAY	MON	TUES	WEDS	THUR	FRI	SAT	SUN
0	1	1	1	1	1	1	1
1	1	1	1	1	1	1	1
2	1	1	1	1	1	1	1
3	1	1	1	1	1	1	1
4	1	1	1	1	1	1	1
5	1	1	1	1	1	1	1
6	3	3	3	3	3	1	1
7	3	3	3	3	3	2	1
8	3	3	3	3	3	3	2
9	3	3	3	3	3	3	2
10	3	3	3	3	3	3	3
11	3	3	3	3	3	3	3
12	3	3	3	3	3	3	3
13	3	3	3	3	3	3	3
14	3	3	3	3	3	3	3
15	3	3	3	3	3	3	3
16	3	3	3	3	3	3	3
17	3	3	3	3	3	3	3
18	3	3	3	3	3	3	3
19	3	3	3	3	3	3	3
20	3	3	3	3	3	3	2
21	2	3	3	3	3	3	2
22	2	2	2	2	2	2	1
23	1	1	2	2	2	2	1

SUMMER SEASON MAY 21 THRU SEPTEMBER 15

HR/DAY	MON	TUES	WEDS	THUR	FRI	SAT	SUN
0	1	1	1	1	1	2	1
1	1	1	1	1	1	1	1
2	1	1	1	1	1	1	1
3	1	1	1	1	1	1	1
4	1	1	1	1	1	1	1
5	2	2	2	2	2	1	1
6	3	3	3	3	3	2	1
7	3	3	3	3	3	2	2
8	3	3	3	3	3	3	2
9	3	3	3	3	3	3	3
10	3	3	3	3	3	3	3
11	3	3	3	3	3	3	3
12	3	3	3	3	3	3	3
13	3	3	3	3	3	3	3
14	3	3	3	3	3	3	3
15	3	3	3	3	3	3	3
16	3	3	3	3	3	3	3
17	3	3	3	3	3	3	3
18	3	3	3	3	3	3	3
19	3	3	3	3	3	3	3
20	3	3	3	3	3	3	3
21	3	3	3	3	3	3	2
22	2	2	2	2	3	2	2
23	2	2	2	2	2	2	1

LANES REQUIRED TO BE OPEN BY HOUR AND TIME OF DAY

FALL SEASON SEPTEMBER 16 THRU November 30

HR/DAY	MON	TUES	WEDS	THUR	FRI	SAT	SUN
0	1	1	1	1	1	1	1
1	1	1	1	1	1	1	1
2	1	1	1	1	1	1	1
3	1	1	1	1	1	1	1
4	1	1	1	1	1	1	1
5	1	1	1	1	1	1	1
6	3	3	3	3	3	1	1
7	3	3	3	3	3	2	2
8	3	3	3	3	3	2	3
9	3	3	3	3	3	3	3
10	3	3	3	3	3	3	3
11	3	3	3	3	3	3	3
12	3	3	3	3	3	3	3
13	3	3	3	3	3	3	3
14	3	3	3	3	3	3	3
15	3	3	3	3	3	3	3
16	3	3	3	3	3	3	3
17	3	3	3	3	3	3	3
18	3	3	3	3	3	3	3
19	3	3	3	3	3	3	2
20	3	3	3	3	3	2	2
21	2	2	2	2	3	2	2
22	2	2	2	2	2	2	1
23	1	1	1	1	2	2	1

WINTER SEAS. DECEMBER 1 THRU February 28

HR/DAY	MON	TUES	WEDS	THUR	FRI	SAT	SUN
0	1	1	1	1	1	1	1
1	1	1	1	1	1	1	1
2	1	1	1	1	1	1	1
3	1	1	1	1	1	1	1
4	1	1	1	1	1	1	1
5	1	1	1	1	1	1	1
6	3	3	3	3	3	1	1
7	3	3	3	3	3	2	1
8	3	3	3	3	3	2	2
9	3	3	3	3	3	2	2
10	3	3	3	3	3	3	3
11	3	3	3	3	3	3	3
12	3	3	3	3	3	3	3
13	3	3	3	3	3	3	3
14	3	3	3	3	3	3	3
15	3	3	3	3	3	3	3
16	3	3	3	3	3	3	3
17	3	3	3	3	3	3	3
18	3	3	3	3	3	3	3
19	3	3	3	3	3	2	2
20	3	3	3	3	3	2	2
21	2	2	3	2	2	2	2
22	2	2	2	2	2	2	1
23	1	1	1	1	2	2	1

I-90 EASTBOUND INTERCHANGES 52A TO 52 (1,150 VEH/HR/LANE)

LANES REQUIRED TO BE OPEN BY HOUR AND TIME OF DAY

SPRING SEASON MARCH 1 THRU MAY 20

HR/DAY	MON	TUES	WEDS	THUR	FRI	SAT	SUN
0	1	1	1	1	1	1	1
1	1	1	1	1	1	1	1
2	1	1	1	1	1	1	1
3	1	1	1	1	1	1	1
4	1	1	1	1	1	1	1
5	2	2	2	2	2	1	1
6	3	3	3	3	3	2	1
7	3	3	3	3	3	2	1
8	3	3	3	3	3	3	2
9	3	3	3	3	3	3	2
10	3	3	3	3	3	3	3
11	3	3	3	3	3	3	3
12	3	3	3	3	3	3	3
13	3	3	3	3	3	3	3
14	3	3	3	3	3	3	3
15	3	3	3	3	3	3	3
16	3	3	3	3	3	3	3
17	3	3	3	3	3	3	3
18	3	3	3	3	3	3	3
19	3	3	3	3	3	3	3
20	2	2	2	2	2	2	3
21	2	2	2	2	2	2	2
22	2	2	2	2	2	2	2
23	1	1	1	1	2	2	1

SUMMER SEASON MAY 21 THRU SEPTEMBER 15

HR/DAY	MON	TUES	WEDS	THUR	FRI	SAT	SUN
0	1	1	1	1	1	1	1
1	1	1	1	1	1	1	1
2	1	1	1	1	1	1	1
3	1	1	1	1	1	1	1
4	1	1	1	1	1	1	1
5	2	2	2	2	2	1	1
6	3	3	3	3	3	2	1
7	3	3	3	3	3	2	2
8	3	3	3	3	3	3	2
9	3	3	3	3	3	3	2
10	3	3	3	3	3	3	3
11	3	3	3	3	3	3	3
12	3	3	3	3	3	3	3
13	3	3	3	3	3	3	3
14	3	3	3	3	3	3	3
15	3	3	3	3	3	3	3
16	3	3	3	3	3	3	3
17	3	3	3	3	3	3	3
18	3	3	3	3	3	3	3
19	3	3	3	3	3	3	3
20	2	3	3	3	3	3	3
21	2	2	2	3	3	3	3
22	2	2	2	3	3	2	2
23	2	1	2	2	2	2	1

LANES REQUIRED TO BE OPEN BY HOUR AND TIME OF DAY

FALL SEASON SEPTEMBER 16 THRU November 30

HR/DAY	MON	TUES	WEDS	THUR	FRI	SAT	SUN
0	1	1	1	1	2	1	1
1	1	1	1	1	1	1	1
2	1	1	1	1	1	1	1
3	1	1	1	1	1	1	1
4	1	1	1	1	1	1	1
5	2	2	2	2	2	1	1
6	3	3	3	3	3	2	1
7	3	3	3	3	3	2	1
8	3	3	3	3	3	3	2
9	3	3	3	3	3	3	2
10	3	3	3	3	3	3	3
11	3	3	3	3	3	3	3
12	3	3	3	3	3	3	3
13	3	3	3	3	3	3	3
14	3	3	3	3	3	3	3
15	3	3	3	3	3	3	3
16	3	3	3	3	3	3	3
17	3	3	3	3	3	3	3
18	3	3	3	3	3	3	3
19	3	3	3	3	3	3	3
20	2	2	2	3	2	2	2
21	2	2	2	2	2	2	2
22	2	2	2	2	2	2	1
23	1	1	1	2	2	2	1

WINTER SEAS. DECEMBER 1 THRU February 28

HR/DAY	MON	TUES	WEDS	THUR	FRI	SAT	SUN
0	1	1	1	1	1	1	1
1	1	1	1	1	1	1	1
2	1	1	1	1	1	1	1
3	1	1	1	1	1	1	1
4	1	1	1	1	1	1	1
5	2	2	2	2	2	1	1
6	3	3	3	3	3	2	1
7	3	3	3	3	3	2	1
8	3	3	3	3	3	3	2
9	3	3	3	3	3	3	2
10	3	3	3	3	3	3	3
11	3	3	3	3	3	3	3
12	3	3	3	3	3	3	3
13	3	3	3	3	3	3	3
14	3	3	3	3	3	3	3
15	3	3	3	3	3	3	3
16	3	3	3	3	3	3	3
17	3	3	3	3	3	3	3
18	3	3	3	3	3	3	3
19	3	3	3	3	3	2	2
20	2	2	2	2	2	2	2
21	2	2	2	2	2	2	2
22	2	2	2	2	2	2	2
23	1	1	1	1	2	2	1

NOTES:

1) THE NEW YORK STATE THRUWAY IS A LIMITED ACCESS, HIGH-SPEED, HIGH-VOLUME HIGHWAY. TRAFFIC SHALL BE MAINTAINED IN ACCORDANCE WITH THE *MANUAL ON UNIFORM TRAFFIC CONTROL DEVICES (MUTCD)*, THE *WORK ZONE TRAFFIC CONTROL PLANS*, AND THE *STANDARD SPECIFICATIONS* SECTION 619 AS AMENDED BY THE AUTHORITY.

2) LANE CLOSURES ON THE THRUWAY SHALL ONLY BE ALLOWED IN ACCORDANCE WITH THESE TRAFFIC MANAGEMENT TABLE(S), UNLESS INDICATED OTHERWISE IN THE CONTRACT PLANS OR PROPOSAL DOCUMENTS.

3) LANE CLOSURE CHARTS SHALL APPLY AS FOLLOWS:

- 1,150 VEH/HR/LANE: APPLIES TO ALL WORK REQUIRING LANE CLOSURE(S) EXCEPT AS PERMITTED BELOW.

- 1,300 VEH/HR/LANE: APPLIES TO NON-EVASIVE WORK WHERE WORKERS AND/OR EQUIPMENT ARE LOCATED 4 FT. OR MORE FROM TRAVEL (SPACE) LANE, OR AS APPROVED BY THE THRUWAY PROJECT ENGINEER. WORK SHOULD BE ABLE TO BE IMMEDIATELY STOPPED AND LANE CLOSURE(S) REMOVED IN THE EVENT QUEUES, GREATER THAN 1 MILE, DEVELOP.

NEW YORK STATE OF OPPORTUNITY. Thruway Authority

U.S. CUSTOMARY STANDARD SHEET

LANE CLOSURE CHARTS
1,150 VEHICLES PER HOUR
BUFFALO DIVISION
(SHEET 10 OF 37)

APPROVED SEPTEMBER 1, 2018

/S/ PATRICK THOMPSON, P.E.
DIRECTOR DESIGN SUPPORT SERVICES BUREAU

ISSUED UNDER DB 18-003

TA 619-33

I-90 WESTBOUND INTERCHANGES 52A TO 53 (1,150 VEH/HR/LANE)

LANES REQUIRED TO BE OPEN BY HOUR AND TIME OF DAY

SPRING SEASON MARCH 1 THRU MAY 20

HR/DAY	MON	TUES	WEDS	THUR	FRI	SAT	SUN
0	1	1	1	1	1	1	1
1	1	1	1	1	1	1	1
2	1	1	1	1	1	1	1
3	1	1	1	1	1	1	1
4	1	1	1	1	1	1	1
5	1	1	1	1	1	1	1
6	3	3	3	3	3	1	1
7	3	3	3	3	3	2	1
8	3	3	3	3	3	3	2
9	3	3	3	3	3	3	2
10	3	3	3	3	3	3	2
11	3	3	3	3	3	3	3
12	3	3	3	3	3	3	3
13	3	3	3	3	3	3	3
14	3	3	3	3	3	3	3
15	3	3	3	3	3	3	3
16	3	3	3	3	3	3	3
17	3	3	3	3	3	3	3
18	3	3	3	3	3	3	3
19	3	3	3	3	3	3	2
20	2	2	3	3	3	2	2
21	2	2	2	2	2	2	2
22	2	2	2	2	2	2	1
23	1	1	1	1	2	2	1

SUMMER SEASON MAY 21 THRU SEPTEMBER 15

HR/DAY	MON	TUES	WEDS	THUR	FRI	SAT	SUN
0	1	1	1	1	1	1	1
1	1	1	1	1	1	1	1
2	1	1	1	1	1	1	1
3	1	1	1	1	1	1	1
4	1	1	1	1	1	1	1
5	2	2	2	2	2	1	1
6	3	3	3	3	3	2	1
7	3	3	3	3	3	2	2
8	3	3	3	3	3	3	2
9	3	3	3	3	3	3	3
10	3	3	3	3	3	3	3
11	3	3	3	3	3	3	3
12	3	3	3	3	3	3	3
13	3	3	3	3	3	3	3
14	3	3	3	3	3	3	3
15	3	3	3	3	3	3	3
16	3	3	3	3	3	3	3
17	3	3	3	3	3	3	3
18	3	3	3	3	3	3	3
19	3	3	3	3	3	3	3
20	3	3	3	3	3	2	2
21	2	2	3	3	3	2	2
22	2	2	2	2	2	2	2
23	1	1	2	2	2	2	1

LANES REQUIRED TO BE OPEN BY HOUR AND TIME OF DAY

FALL SEASON SEPTEMBER 16 THRU November 30

HR/DAY	MON	TUES	WEDS	THUR	FRI	SAT	SUN
0	1	1	1	1	1	1	1
1	1	1	1	1	1	1	1
2	1	1	1	1	1	1	1
3	1	1	1	1	1	1	1
4	1	1	1	1	1	1	1
5	1	1	1	1	1	1	1
6	3	3	3	3	3	1	1
7	3	3	3	3	3	2	2
8	3	3	3	3	3	3	3
9	3	3	3	3	3	3	3
10	3	3	3	3	3	3	3
11	3	3	3	3	3	3	3
12	3	3	3	3	3	3	3
13	3	3	3	3	3	3	3
14	3	3	3	3	3	3	3
15	3	3	3	3	3	3	3
16	3	3	3	3	3	3	3
17	3	3	3	3	3	3	3
18	3	3	3	3	3	3	3
19	3	3	3	3	3	3	2
20	2	2	3	3	3	2	2
21	2	2	2	2	2	2	2
22	2	2	2	2	2	2	1
23	1	1	1	1	2	2	1

WINTER SEAS. DECEMBER 1 THRU February 28

HR/DAY	MON	TUES	WEDS	THUR	FRI	SAT	SUN
0	1	1	1	1	1	1	1
1	1	1	1	1	1	1	1
2	1	1	1	1	1	1	1
3	1	1	1	1	1	1	1
4	1	1	1	1	1	1	1
5	1	1	1	1	1	1	1
6	3	3	3	3	3	1	1
7	3	3	3	3	3	2	1
8	3	3	3	3	3	2	2
9	3	3	3	3	3	2	2
10	3	3	3	3	3	3	3
11	3	3	3	3	3	3	3
12	3	3	3	3	3	3	3
13	3	3	3	3	3	3	3
14	3	3	3	3	3	3	3
15	3	3	3	3	3	3	3
16	3	3	3	3	3	3	3
17	3	3	3	3	3	3	3
18	3	3	3	3	3	3	3
19	3	3	3	3	3	2	2
20	2	3	3	3	3	2	2
21	2	2	2	2	2	2	2
22	2	2	2	2	2	2	1
23	1	1	1	1	2	2	1

I-90 EASTBOUND INTERCHANGES 53 TO 52A (1,150 VEH/HR/LANE)

LANES REQUIRED TO BE OPEN BY HOUR AND TIME OF DAY

SPRING SEASON MARCH 1 THRU MAY 20

HR/DAY	MON	TUES	WEDS	THUR	FRI	SAT	SUN
0	1	1	1	1	1	1	1
1	1	1	1	1	1	1	1
2	1	1	1	1	1	1	1
3	1	1	1	1	1	1	1
4	1	1	1	1	1	1	1
5	2	2	2	2	2	1	1
6	3	3	3	3	3	2	1
7	3	3	3	3	3	2	1
8	3	3	3	3	3	3	2
9	3	3	3	3	3	3	2
10	3	3	3	3	3	3	3
11	3	3	3	3	3	3	3
12	3	3	3	3	3	3	3
13	3	3	3	3	3	3	3
14	3	3	3	3	3	3	3
15	3	3	3	3	3	3	3
16	3	3	3	3	3	3	3
17	3	3	3	3	3	3	3
18	3	3	3	3	3	3	3
19	3	3	3	3	3	3	3
20	2	2	2	2	2	2	3
21	2	2	2	2	2	2	2
22	2	2	2	2	2	2	2
23	1	1	1	1	2	2	1

SUMMER SEASON MAY 21 THRU SEPTEMBER 15

HR/DAY	MON	TUES	WEDS	THUR	FRI	SAT	SUN
0	1	1	1	1	1	1	1
1	1	1	1	1	1	1	1
2	1	1	1	1	1	1	1
3	1	1	1	1	1	1	1
4	1	1	1	1	1	1	1
5	2	2	2	2	2	1	1
6	3	3	3	3	3	2	1
7	3	3	3	3	3	2	1
8	3	3	3	3	3	3	2
9	3	3	3	3	3	3	2
10	3	3	3	3	3	3	3
11	3	3	3	3	3	3	3
12	3	3	3	3	3	3	3
13	3	3	3	3	3	3	3
14	3	3	3	3	3	3	3
15	3	3	3	3	3	3	3
16	3	3	3	3	3	3	3
17	3	3	3	3	3	3	3
18	3	3	3	3	3	3	3
19	3	3	3	3	3	3	3
20	2	3	3	3	3	3	3
21	2	2	2	3	3	3	3
22	2	2	2	3	3	3	2
23	2	1	2	2	2	2	1

LANES REQUIRED TO BE OPEN BY HOUR AND TIME OF DAY

FALL SEASON SEPTEMBER 16 THRU November 30

HR/DAY	MON	TUES	WEDS	THUR	FRI	SAT	SUN
0	1	1	1	1	2	1	1
1	1	1	1	1	1	1	1
2	1	1	1	1	1	1	1
3	1	1	1	1	1	1	1
4	1	1	1	1	1	1	1
5	2	2	2	2	2	1	1
6	3	3	3	3	3	2	1
7	3	3	3	3	3	2	1
8	3	3	3	3	3	3	2
9	3	3	3	3	3	3	2
10	3	3	3	3	3	3	3
11	3	3	3	3	3	3	3
12	3	3	3	3	3	3	3
13	3	3	3	3	3	3	3
14	3	3	3	3	3	3	3
15	3	3	3	3	3	3	3
16	3	3	3	3	3	3	3
17	3	3	3	3	3	3	3
18	3	3	3	3	3	3	3
19	3	3	3	3	3	3	3
20	2	2	2	3	2	2	2
21	2	2	2	2	2	2	2
22	2	2	2	2	2	2	1
23	1	1	1	2	2	2	1

WINTER SEAS. DECEMBER 1 THRU February 28

HR/DAY	MON	TUES	WEDS	THUR	FRI	SAT	SUN
0	1	1	1	1	1	1	1
1	1	1	1	1	1	1	1
2	1	1	1	1	1	1	1
3	1	1	1	1	1	1	1
4	1	1	1	1	1	1	1
5	2	2	2	2	2	1	1
6	3	3	3	3	3	1	1
7	3	3	3	3	3	2	1
8	3	3	3	3	3	2	2
9	3	3	3	3	3	3	2
10	3	3	3	3	3	3	3
11	3	3	3	3	3	3	3
12	3	3	3	3	3	3	3
13	3	3	3	3	3	3	3
14	3	3	3	3	3	3	3
15	3	3	3	3	3	3	3
16	3	3	3	3	3	3	3
17	3	3	3	3	3	3	3
18	3	3	3	3	3	3	3
19	2	2	3	3	3	2	2
20	2	2	2	2	2	2	2
21	2	2	2	2	2	2	2
22	2	2	2	2	2	2	2
23	1	1	1	1	2	2	1

NOTES:

1) THE NEW YORK STATE THRUWAY IS A LIMITED ACCESS, HIGH-SPEED, HIGH-VOLUME HIGHWAY. TRAFFIC SHALL BE MAINTAINED IN ACCORDANCE WITH THE *MANUAL ON UNIFORM TRAFFIC CONTROL DEVICES (MUTCD)*, THE *WORK ZONE TRAFFIC CONTROL PLANS*, AND THE *STANDARD SPECIFICATIONS* SECTION 619 AS AMENDED BY THE AUTHORITY.

2) LANE CLOSURES ON THE THRUWAY SHALL ONLY BE ALLOWED IN ACCORDANCE WITH THESE TRAFFIC MANAGEMENT TABLE(S), UNLESS INDICATED OTHERWISE IN THE CONTRACT PLANS OR PROPOSAL DOCUMENTS.

3) LANE CLOSURE CHARTS SHALL APPLY AS FOLLOWS:

- 1,150 VEH/HR/LANE: APPLIES TO ALL WORK REQUIRING LANE CLOSURE(S) EXCEPT AS PERMITTED BELOW.

- 1,300 VEH/HR/LANE: APPLIES TO NON-EVASIVE WORK WHERE WORKERS AND/OR EQUIPMENT ARE LOCATED 4 FT. OR MORE FROM TRAVEL (SPACE) LANE, OR AS APPROVED BY THE THRUWAY PROJECT ENGINEER. WORK SHOULD BE ABLE TO BE IMMEDIATELY STOPPED AND LANE CLOSURE(S) REMOVED IN THE EVENT QUEUES, GREATER THAN 1 MILE, DEVELOP.

NEW YORK STATE OF OPPORTUNITY. Thruway Authority

U.S. CUSTOMARY STANDARD SHEET

LANE CLOSURE CHARTS
1,150 VEHICLES PER HOUR
BUFFALO DIVISION
(SHEET 11 OF 37)

APPROVED SEPTEMBER 1, 2018

/S/ PATRICK THOMPSON, P.E.
DIRECTOR DESIGN SUPPORT SERVICES BUREAU

ISSUED UNDER DB 18-003

TA 619-33

I-90 WESTBOUND INTERCHANGES 53 TO 54 (1,150 VEH/HR/LANE)

LANES REQUIRED TO BE OPEN BY HOUR AND TIME OF DAY

SPRING SEASON MARCH 1 THRU MAY 20

HR/DAY	MON	TUES	WEDS	THUR	FRI	SAT	SUN
0	1	1	1	1	1	1	1
1	1	1	1	1	1	1	1
2	1	1	1	1	1	1	1
3	1	1	1	1	1	1	1
4	1	1	1	1	1	1	1
5	1	1	1	1	1	1	1
6	3	3	3	3	3	1	1
7	4	4	4	4	4	2	2
8	4	4	4	4	4	3	2
9	3	3	3	3	4	3	2
10	3	3	3	3	4	4	3
11	3	3	4	4	4	4	3
12	4	4	4	4	4	4	4
13	4	4	4	4	4	4	4
14	4	4	4	4	4	4	4
15	4	4	4	4	4	4	4
16	4	4	4	4	4	4	4
17	4	4	4	4	4	4	3
18	4	4	4	4	4	3	3
19	3	3	3	3	3	3	3
20	3	3	3	3	3	2	2
21	2	3	3	3	3	3	2
22	2	2	2	2	3	3	2
23	1	2	2	2	2	2	1

SUMMER SEASON MAY 21 THRU SEPTEMBER 15

HR/DAY	MON	TUES	WEDS	THUR	FRI	SAT	SUN
0	1	1	1	1	1	1	1
1	1	1	1	1	1	1	1
2	1	1	1	1	1	1	1
3	1	1	1	1	1	1	1
4	1	1	1	1	1	1	1
5	2	1	2	1	1	1	1
6	3	3	3	3	3	2	1
7	4	4	4	4	4	2	2
8	4	4	4	4	4	3	3
9	4	4	4	4	4	4	3
10	4	4	4	4	4	4	4
11	4	4	4	4	4	4	4
12	4	4	4	4	4	4	4
13	4	4	4	4	4	4	4
14	4	4	4	4	4	4	4
15	4	4	4	4	4	4	4
16	4	4	4	4	4	4	4
17	4	4	4	4	4	4	4
18	4	4	4	4	4	3	3
19	3	3	3	4	4	3	3
20	3	3	3	3	3	3	3
21	3	3	3	3	3	3	2
22	2	2	2	2	3	2	2
23	2	2	2	2	2	2	2

LANES REQUIRED TO BE OPEN BY HOUR AND TIME OF DAY

FALL SEASON SEPTEMBER 16 THRU November 30

HR/DAY	MON	TUES	WEDS	THUR	FRI	SAT	SUN
0	1	1	1	1	1	1	1
1	1	1	1	1	1	1	1
2	1	1	1	1	1	1	1
3	1	1	1	1	1	1	1
4	1	1	1	1	1	1	1
5	1	1	1	1	2	1	1
6	3	3	3	3	3	2	1
7	4	4	4	4	4	2	2
8	4	4	4	4	4	3	3
9	3	3	3	4	4	4	4
10	3	3	3	3	4	4	4
11	4	4	4	4	4	4	4
12	4	4	4	4	4	4	4
13	4	4	4	4	4	4	4
14	4	4	4	4	4	4	4
15	4	4	4	4	4	4	4
16	4	4	4	4	4	4	4
17	4	4	4	4	4	4	3
18	4	4	4	4	4	3	3
19	3	3	3	4	4	3	3
20	3	3	3	3	3	3	2
21	2	3	3	3	3	3	2
22	2	2	2	2	3	2	1
23	1	2	2	2	2	2	1

WINTER SEAS. DECEMBER 1 THRU February 28

HR/DAY	MON	TUES	WEDS	THUR	FRI	SAT	SUN
0	1	1	1	1	1	1	1
1	1	1	1	1	1	1	1
2	1	1	1	1	1	1	1
3	1	1	1	1	1	1	1
4	1	1	1	1	1	1	1
5	1	1	1	1	1	1	1
6	3	3	3	3	3	1	1
7	4	4	4	4	4	2	2
8	4	4	4	4	4	3	2
9	3	4	3	3	3	3	3
10	3	3	3	3	3	3	4
11	4	4	4	3	4	4	4
12	4	4	4	4	4	4	4
13	4	4	4	4	4	4	3
14	4	4	4	4	4	4	3
15	4	4	4	4	4	4	4
16	4	4	4	4	4	4	3
17	4	4	4	4	4	4	3
18	4	4	4	4	4	3	3
19	3	3	3	3	3	3	2
20	3	3	3	3	3	2	2
21	2	3	3	3	3	3	2
22	2	2	2	2	3	3	2
23	2	2	2	2	2	2	1

I-90 EASTBOUND INTERCHANGES 54 TO 53 (1,150 VEH/HR/LANE)

LANES REQUIRED TO BE OPEN BY HOUR AND TIME OF DAY

SPRING SEASON MARCH 1 THRU MAY 20

HR/DAY	MON	TUES	WEDS	THUR	FRI	SAT	SUN
0	1	1	1	1	1	1	1
1	1	1	1	1	1	1	1
2	1	1	1	1	1	1	1
3	1	1	1	1	1	1	1
4	1	1	1	1	1	1	1
5	2	2	2	2	2	1	1
6	4	4	4	4	4	2	1
7	4	4	4	4	4	2	1
8	4	4	4	4	4	3	2
9	4	4	4	4	4	3	2
10	4	4	4	4	4	3	3
11	4	4	4	4	4	4	4
12	4	4	4	4	4	4	4
13	4	4	4	4	4	4	4
14	4	4	4	4	4	4	4
15	4	4	4	4	4	4	4
16	4	4	4	4	4	4	4
17	4	4	4	4	4	4	4
18	4	4	4	4	4	4	4
19	3	3	3	3	3	3	3
20	3	2	3	3	3	2	3
21	2	2	2	2	2	2	2
22	2	2	2	2	2	2	2
23	1	1	1	1	2	2	1

SUMMER SEASON MAY 21 THRU SEPTEMBER 15

HR/DAY	MON	TUES	WEDS	THUR	FRI	SAT	SUN
0	1	1	1	1	1	1	1
1	1	1	1	1	1	1	1
2	1	1	1	1	1	1	1
3	1	1	1	1	1	1	1
4	1	1	1	1	1	1	1
5	2	2	2	2	2	1	1
6	4	4	4	4	4	2	1
7	4	4	4	4	4	2	1
8	4	4	4	4	4	3	2
9	4	4	4	4	4	3	2
10	4	4	4	4	4	4	3
11	4	4	4	4	4	4	4
12	4	4	4	4	4	4	4
13	4	4	4	4	4	4	4
14	4	4	4	4	4	4	4
15	4	4	4	4	4	4	4
16	4	4	4	4	4	4	4
17	4	4	4	4	4	4	4
18	4	4	4	4	4	4	4
19	3	3	3	3	3	3	4
20	3	3	3	3	3	3	3
21	2	2	3	3	3	3	3
22	2	2	2	3	3	3	2
23	1	1	2	2	2	2	2

LANES REQUIRED TO BE OPEN BY HOUR AND TIME OF DAY

FALL SEASON SEPTEMBER 16 THRU November 30

HR/DAY	MON	TUES	WEDS	THUR	FRI	SAT	SUN
0	2	1	1	1	2	1	2
1	2	1	1	1	1	1	2
2	2	1	1	1	1	1	2
3	2	1	1	1	1	1	2
4	2	1	1	1	1	1	2
5	3	2	2	2	2	1	2
6	4	4	4	4	4	2	2
7	4	4	4	4	4	2	2
8	4	4	4	4	4	3	2
9	4	4	4	4	4	3	2
10	4	4	4	4	4	4	3
11	4	4	4	4	4	4	4
12	4	4	4	4	4	4	4
13	4	4	4	4	4	4	4
14	4	4	4	4	4	4	4
15	4	4	4	4	4	4	4
16	4	4	4	4	4	4	4
17	4	4	4	4	4	4	4
18	4	4	4	4	4	4	4
19	3	3	3	3	3	3	4
20	3	2	2	3	3	3	3
21	2	2	2	2	2	2	2
22	2	2	2	2	2	2	2
23	2	1	1	2	2	2	2

WINTER SEAS. DECEMBER 1 THRU February 28

HR/DAY	MON	TUES	WEDS	THUR	FRI	SAT	SUN
0	1	2	1	1	1	1	1
1	1	1	1	1	1	1	1
2	1	1	1	1	1	1	1
3	1	1	2	1	1	1	1
4	2	1	2	1	1	1	1
5	2	2	3	2	2	1	1
6	4	4	4	4	4	2	1
7	4	4	4	4	4	2	1
8	4	4	4	4	4	3	2
9	4	4	4	4	4	3	2
10	4	4	4	4	4	3	3
11	4	4	4	4	4	4	3
12	4	4	4	4	4	4	4
13	4	4	4	4	4	4	4
14	4	4	4	4	4	4	4
15	4	4	4	4	4	4	4
16	4	4	4	4	4	4	4
17	4	4	4	4	4	4	4
18	4	4	4	4	4	4	3
19	3	3	3	3	3	3	3
20	2	2	2	2	2	2	2
21	2	2	2	2	2	2	2
22	2	2	2	2	2	2	2
23	1	1	1	1	2	2	1

NOTES:

1) THE NEW YORK STATE THRUWAY IS A LIMITED ACCESS, HIGH-SPEED, HIGH-VOLUME HIGHWAY. TRAFFIC SHALL BE MAINTAINED IN ACCORDANCE WITH THE *MANUAL ON UNIFORM TRAFFIC CONTROL DEVICES (MUTCD)*, THE *WORK ZONE TRAFFIC CONTROL PLANS*, AND THE *STANDARD SPECIFICATIONS* SECTION 619 AS AMENDED BY THE AUTHORITY.

2) LANE CLOSURES ON THE THRUWAY SHALL ONLY BE ALLOWED IN ACCORDANCE WITH THESE TRAFFIC MANAGEMENT TABLE(S), UNLESS INDICATED OTHERWISE IN THE CONTRACT PLANS OR PROPOSAL DOCUMENTS.

3) LANE CLOSURE CHARTS SHALL APPLY AS FOLLOWS:

- 1,150 VEH/HR/LANE: APPLIES TO ALL WORK REQUIRING LANE CLOSURE(S) EXCEPT AS PERMITTED BELOW.

- 1,300 VEH/HR/LANE: APPLIES TO NON-EVASIVE WORK WHERE WORKERS AND/OR EQUIPMENT ARE LOCATED 4 FT. OR MORE FROM TRAVEL (SPACE) LANE, OR AS APPROVED BY THE THRUWAY PROJECT ENGINEER. WORK SHOULD BE ABLE TO BE IMMEDIATELY STOPPED AND LANE CLOSURE(S) REMOVED IN THE EVENT QUEUES, GREATER THAN 1 MILE, DEVELOP.

NEW YORK STATE OF OPPORTUNITY. Thruway Authority

U.S. CUSTOMARY STANDARD SHEET

LANE CLOSURE CHARTS
1,150 VEHICLES PER HOUR
BUFFALO DIVISION
(SHEET 12 OF 37)

APPROVED SEPTEMBER 1, 2018

/S/ PATRICK THOMPSON, P.E.
DIRECTOR DESIGN SUPPORT SERVICES BUREAU

ISSUED UNDER DB 18-003

TA 619-33

I-90 WESTBOUND INTERCHANGES 54 TO 55 (1,150 VEH/HR/LANE)

LANES REQUIRED TO BE OPEN BY HOUR AND TIME OF DAY

SPRING SEASON MARCH 1 THRU MAY 20

HR/DAY	MON	TUES	WEDS	THUR	FRI	SAT	SUN
0	1	1	1	1	1	1	1
1	1	1	1	1	1	1	1
2	1	1	1	1	1	1	1
3	1	1	1	1	1	1	1
4	1	1	1	1	1	1	1
5	1	1	1	1	1	1	1
6	3	3	3	3	3	1	1
7	3	3	3	3	3	2	1
8	3	3	3	3	3	2	2
9	3	3	3	3	3	3	2
10	3	3	3	3	3	3	2
11	3	3	3	3	3	3	3
12	3	3	3	3	3	3	3
13	3	3	3	3	3	3	3
14	3	3	3	3	3	3	3
15	3	3	3	3	3	3	3
16	3	3	3	3	3	3	3
17	3	3	3	3	3	3	3
18	3	3	3	3	3	3	2
19	2	3	3	3	3	2	2
20	2	2	2	2	2	2	2
21	2	2	2	2	2	2	2
22	2	2	2	2	2	2	1
23	1	1	1	1	2	1	1

SUMMER SEASON MAY 21 THRU SEPTEMBER 15

HR/DAY	MON	TUES	WEDS	THUR	FRI	SAT	SUN
0	1	1	1	1	1	1	1
1	1	1	1	1	1	1	1
2	1	1	1	1	1	1	1
3	1	1	1	1	1	1	1
4	1	1	1	1	1	1	1
5	1	1	1	1	1	1	1
6	3	3	3	3	3	1	1
7	3	3	3	3	3	2	1
8	3	3	3	3	3	3	2
9	3	3	3	3	3	3	3
10	3	3	3	3	3	3	3
11	3	3	3	3	3	3	3
12	3	3	3	3	3	3	3
13	3	3	3	3	3	3	3
14	3	3	3	3	3	3	3
15	3	3	3	3	3	3	3
16	3	3	3	3	3	3	3
17	3	3	3	3	3	3	3
18	3	3	3	3	3	3	3
19	3	3	3	3	3	2	2
20	2	2	2	3	2	2	2
21	2	2	2	2	2	2	2
22	2	2	2	2	2	2	1
23	1	1	1	1	2	2	1

LANES REQUIRED TO BE OPEN BY HOUR AND TIME OF DAY

FALL SEASON SEPTEMBER 16 THRU November 30

HR/DAY	MON	TUES	WEDS	THUR	FRI	SAT	SUN
0	1	1	1	1	1	1	1
1	1	1	1	1	1	1	1
2	1	1	1	1	1	1	1
3	1	1	1	1	1	1	1
4	1	1	1	1	1	1	1
5	1	1	1	1	1	1	1
6	3	3	3	3	3	1	1
7	3	3	3	3	3	2	2
8	3	3	3	3	3	3	3
9	3	3	3	3	3	3	3
10	3	3	3	3	3	3	3
11	3	3	3	3	3	3	3
12	3	3	3	3	3	3	3
13	3	3	3	3	3	3	3
14	3	3	3	3	3	3	3
15	3	3	3	3	3	3	3
16	3	3	3	3	3	3	3
17	3	3	3	3	3	3	3
18	3	3	3	3	3	3	2
19	2	3	3	3	3	2	2
20	2	2	2	2	2	2	2
21	2	2	2	2	2	2	1
22	1	2	2	2	2	2	1
23	1	1	1	1	2	1	1

WINTER SEAS. DECEMBER 1 THRU February 28

HR/DAY	MON	TUES	WEDS	THUR	FRI	SAT	SUN
0	1	1	1	1	1	1	1
1	1	1	1	1	1	1	1
2	1	1	1	1	1	1	1
3	1	1	1	1	1	1	1
4	1	1	1	1	1	1	1
5	1	1	1	1	1	1	1
6	3	3	3	3	3	1	1
7	3	3	3	3	3	2	1
8	3	3	3	3	3	2	2
9	3	3	3	3	3	3	3
10	3	3	3	3	3	3	3
11	3	3	3	3	3	3	3
12	3	3	3	3	3	3	3
13	3	3	3	3	3	3	3
14	3	3	3	3	3	3	3
15	3	3	3	3	3	3	3
16	3	3	3	3	3	3	3
17	3	3	3	3	3	3	2
18	3	3	3	3	3	3	2
19	2	3	3	3	3	2	2
20	2	2	2	2	2	2	2
21	2	2	2	2	2	2	1
22	2	2	2	2	2	2	1
23	1	1	1	1	2	1	1

I-90 EASTBOUND INTERCHANGES 55 TO 54 (1,150 VEH/HR/LANE)

LANES REQUIRED TO BE OPEN BY HOUR AND TIME OF DAY

SPRING SEASON MARCH 1 THRU MAY 20

HR/DAY	MON	TUES	WEDS	THUR	FRI	SAT	SUN
0	1	1	1	1	1	1	1
1	1	1	1	1	1	1	1
2	1	1	1	1	1	1	1
3	1	1	1	1	1	1	1
4	1	1	1	1	1	1	1
5	2	2	2	2	2	1	1
6	3	3	3	3	3	1	1
7	3	3	3	3	3	2	1
8	3	3	3	3	3	2	2
9	3	3	3	3	3	3	2
10	3	3	3	3	3	3	2
11	3	3	3	3	3	3	3
12	3	3	3	3	3	3	3
13	3	3	3	3	3	3	3
14	3	3	3	3	3	3	3
15	3	3	3	3	3	3	3
16	3	3	3	3	3	3	3
17	3	3	3	3	3	3	3
18	3	3	3	3	3	3	3
19	3	2	2	3	3	3	3
20	2	2	2	2	2	2	3
21	2	2	2	2	2	2	2
22	2	1	2	2	2	2	2
23	1	1	1	1	1	1	1

SUMMER SEASON MAY 21 THRU SEPTEMBER 15

HR/DAY	MON	TUES	WEDS	THUR	FRI	SAT	SUN
0	1	1	1	1	1	1	1
1	1	1	1	1	1	1	1
2	1	1	1	1	1	1	1
3	1	1	1	1	1	1	1
4	1	1	1	1	1	1	1
5	2	2	2	2	2	1	1
6	3	3	3	3	3	2	1
7	3	3	3	3	3	2	1
8	3	3	3	3	3	2	2
9	3	3	3	3	3	3	2
10	3	3	3	3	3	3	3
11	3	3	3	3	3	3	3
12	3	3	3	3	3	3	3
13	3	3	3	3	3	3	3
14	3	3	3	3	3	3	3
15	3	3	3	3	3	3	3
16	3	3	3	3	3	3	3
17	3	3	3	3	3	3	3
18	3	3	3	3	3	3	3
19	3	2	2	3	3	3	3
20	2	2	2	2	3	3	3
21	2	2	2	3	2	3	2
22	2	2	2	2	2	2	2
23	1	1	1	2	2	2	1

LANES REQUIRED TO BE OPEN BY HOUR AND TIME OF DAY

FALL SEASON SEPTEMBER 16 THRU November 30

HR/DAY	MON	TUES	WEDS	THUR	FRI	SAT	SUN
0	1	1	1	1	2	1	1
1	1	1	1	1	1	1	1
2	1	1	1	1	1	1	1
3	1	1	1	1	1	1	1
4	1	1	1	1	1	1	1
5	2	2	2	2	2	1	1
6	3	3	3	3	3	1	1
7	3	3	3	3	3	2	1
8	3	3	3	3	3	2	2
9	3	3	3	3	3	3	2
10	3	3	3	3	3	3	2
11	3	3	3	3	3	3	3
12	3	3	3	3	3	3	3
13	3	3	3	3	3	3	3
14	3	3	3	3	3	3	3
15	3	3	3	3	3	3	3
16	3	3	3	3	3	3	3
17	3	3	3	3	3	3	3
18	3	3	3	3	3	3	3
19	2	2	2	2	3	2	3
20	2	2	2	2	2	2	2
21	2	2	2	2	2	2	2
22	1	1	1	2	2	2	1
23	1	1	1	2	1	1	1

WINTER SEAS. DECEMBER 1 THRU February 28

HR/DAY	MON	TUES	WEDS	THUR	FRI	SAT	SUN
0	1	1	1	1	1	1	1
1	1	1	1	1	1	1	1
2	1	1	1	1	1	1	1
3	1	1	1	1	1	1	1
4	1	1	1	1	1	1	1
5	2	2	2	2	2	1	1
6	3	3	3	3	3	1	1
7	3	3	3	3	3	2	1
8	3	3	3	3	3	2	1
9	3	3	3	3	3	3	2
10	3	3	3	3	3	3	2
11	3	3	3	3	3	3	3
12	3	3	3	3	3	3	3
13	3	3	3	3	3	3	3
14	3	3	3	3	3	3	3
15	3	3	3	3	3	3	3
16	3	3	3	3	3	3	3
17	3	3	3	3	3	3	3
18	3	3	3	3	3	3	3
19	2	2	2	2	2	2	2
20	2	2	2	2	2	2	2
21	2	2	2	2	2	2	2
22	1	1	1	2	2	2	2
23	1	1	1	1	1	1	1

NOTES:

1) THE NEW YORK STATE THRUWAY IS A LIMITED ACCESS, HIGH-SPEED, HIGH-VOLUME HIGHWAY. TRAFFIC SHALL BE MAINTAINED IN ACCORDANCE WITH THE *MANUAL ON UNIFORM TRAFFIC CONTROL DEVICES (MUTCD)*, THE *WORK ZONE TRAFFIC CONTROL PLANS*, AND THE *STANDARD SPECIFICATIONS* SECTION 619 AS AMENDED BY THE AUTHORITY.

2) LANE CLOSURES ON THE THRUWAY SHALL ONLY BE ALLOWED IN ACCORDANCE WITH THESE TRAFFIC MANAGEMENT TABLE(S), UNLESS INDICATED OTHERWISE IN THE CONTRACT PLANS OR PROPOSAL DOCUMENTS.

3) LANE CLOSURE CHARTS SHALL APPLY AS FOLLOWS:

- 1,150 VEH/HR/LANE: APPLIES TO ALL WORK REQUIRING LANE CLOSURE(S) EXCEPT AS PERMITTED BELOW.

- 1,300 VEH/HR/LANE: APPLIES TO NON-EVASIVE WORK WHERE WORKERS AND/OR EQUIPMENT ARE LOCATED 4 FT. OR MORE FROM TRAVEL (SPACE) LANE, OR AS APPROVED BY THE THRUWAY PROJECT ENGINEER. WORK SHOULD BE ABLE TO BE IMMEDIATELY STOPPED AND LANE CLOSURE(S) REMOVED IN THE EVENT QUEUES, GREATER THAN 1 MILE, DEVELOP.

NEW YORK STATE OF OPPORTUNITY. Thruway Authority

U.S. CUSTOMARY STANDARD SHEET

LANE CLOSURE CHARTS
1,150 VEHICLES PER HOUR
BUFFALO DIVISION
(SHEET 13 OF 37)

APPROVED SEPTEMBER 1, 2018

/S/ PATRICK THOMPSON, P.E.
DIRECTOR DESIGN SUPPORT SERVICES BUREAU

ISSUED UNDER DB 18-003

TA 619-33

I-90 WESTBOUND INTERCHANGES 55 TO 56 (1,150 VEH/HR/LANE)

LANES REQUIRED TO BE OPEN BY HOUR AND TIME OF DAY

SPRING SEASON MARCH 1 THRU MAY 20

HR/DAY	MON	TUES	WEDS	THUR	FRI	SAT	SUN
0	1	1	1	1	1	1	1
1	1	1	1	1	1	1	1
2	1	1	1	1	1	1	1
3	1	1	1	1	1	1	1
4	1	1	1	1	1	1	1
5	1	1	1	1	1	1	1
6	1	1	1	1	1	1	1
7	2	2	2	2	2	1	1
8	2	2	2	2	2	2	1
9	2	2	2	2	2	2	1
10	2	2	2	2	2	2	2
11	2	2	2	2	2	2	2
12	2	2	2	2	2	2	2
13	2	2	2	2	2	2	2
14	2	2	2	2	2	2	2
15	2	2	2	2	2	2	2
16	2	2	2	2	2	2	2
17	2	2	2	2	2	2	2
18	2	2	2	2	2	2	2
19	1	1	2	2	2	1	2
20	1	1	1	1	1	1	1
21	1	1	1	1	1	1	1
22	1	1	1	1	1	1	1
23	1	1	1	1	1	1	1

SUMMER SEASON MAY 21 THRU SEPTEMBER 15

HR/DAY	MON	TUES	WEDS	THUR	FRI	SAT	SUN
0	1	1	1	1	1	1	1
1	1	1	1	1	1	1	1
2	1	1	1	1	1	1	1
3	1	1	1	1	1	1	1
4	1	1	1	1	1	1	1
5	1	1	1	1	1	1	1
6	1	1	1	1	1	1	1
7	2	2	2	2	2	1	1
8	2	2	2	2	2	2	1
9	2	2	2	2	2	2	2
10	2	2	2	2	2	2	2
11	2	2	2	2	2	2	2
12	2	2	2	2	2	2	2
13	2	2	2	2	2	2	2
14	2	2	2	2	2	2	2
15	2	2	2	2	2	2	2
16	2	2	2	2	2	2	2
17	2	2	2	2	2	2	2
18	2	2	2	2	2	2	2
19	2	2	2	2	2	2	2
20	1	1	1	2	2	1	1
21	1	1	1	1	1	1	1
22	1	1	1	1	1	1	1
23	1	1	1	1	1	1	1

LANES REQUIRED TO BE OPEN BY HOUR AND TIME OF DAY

FALL SEASON SEPTEMBER 16 THRU November 30

HR/DAY	MON	TUES	WEDS	THUR	FRI	SAT	SUN
0	1	1	1	1	1	1	1
1	1	1	1	1	1	1	1
2	1	1	1	1	1	1	1
3	1	1	1	1	1	1	1
4	1	1	1	1	1	1	1
5	1	1	1	1	1	1	1
6	1	1	1	1	1	1	1
7	2	2	2	2	2	1	1
8	2	2	2	2	2	2	1
9	2	2	2	2	2	2	2
10	2	2	2	2	2	2	2
11	2	2	2	2	2	2	2
12	2	2	2	2	2	2	2
13	2	2	2	2	2	2	2
14	2	2	2	2	2	2	2
15	2	2	2	2	2	2	2
16	2	2	2	2	2	2	2
17	2	2	2	2	2	2	2
18	2	2	2	2	2	2	2
19	1	2	2	2	2	1	2
20	1	1	1	1	1	1	1
21	1	1	1	1	1	1	1
22	1	1	1	1	1	1	1
23	1	1	1	1	1	1	1

WINTER SEAS. DECEMBER 1 THRU February 28

HR/DAY	MON	TUES	WEDS	THUR	FRI	SAT	SUN
0	1	1	1	1	1	1	1
1	1	1	1	1	1	1	1
2	1	1	1	1	1	1	1
3	1	1	1	1	1	1	1
4	1	1	1	1	1	1	1
5	1	1	1	1	1	1	1
6	1	1	1	1	1	1	1
7	2	2	2	2	2	1	1
8	2	2	2	2	2	1	1
9	2	2	2	2	2	2	1
10	2	2	2	2	2	2	2
11	2	2	2	2	2	2	2
12	2	2	2	2	2	2	2
13	2	2	2	2	2	2	2
14	2	2	2	2	2	2	2
15	2	2	2	2	2	2	2
16	2	2	2	2	2	2	2
17	2	2	2	2	2	2	2
18	2	2	2	2	2	2	1
19	1	1	1	2	2	1	1
20	1	1	1	1	1	1	1
21	1	1	1	1	1	1	1
22	1	1	1	1	1	1	1
23	1	1	1	1	1	1	1

I-90 EASTBOUND INTERCHANGES 56 TO 55 (1,150 VEH/HR/LANE)

LANES REQUIRED TO BE OPEN BY HOUR AND TIME OF DAY

SPRING SEASON MARCH 1 THRU MAY 20

HR/DAY	MON	TUES	WEDS	THUR	FRI	SAT	SUN
0	1	1	1	1	1	1	1
1	1	1	1	1	1	1	1
2	1	1	1	1	1	1	1
3	1	1	1	1	1	1	1
4	1	1	1	1	1	1	1
5	1	1	1	1	1	1	1
6	2	2	2	2	2	1	1
7	2	2	2	2	2	1	1
8	2	2	2	2	2	1	1
9	2	2	2	2	2	2	1
10	2	2	2	2	2	2	2
11	2	2	2	2	2	2	2
12	2	2	2	2	2	2	2
13	2	2	2	2	2	2	2
14	2	2	2	2	2	2	2
15	2	2	2	2	2	2	2
16	2	2	2	2	2	2	2
17	2	2	2	2	2	2	2
18	2	2	2	2	2	2	2
19	2	1	1	1	2	2	2
20	1	1	1	1	1	1	2
21	1	1	1	1	1	1	1
22	1	1	1	1	1	1	1
23	1	1	1	1	1	1	1

SUMMER SEASON MAY 21 THRU SEPTEMBER 15

HR/DAY	MON	TUES	WEDS	THUR	FRI	SAT	SUN
0	1	1	1	1	1	1	1
1	1	1	1	1	1	1	1
2	1	1	1	1	1	1	1
3	1	1	1	1	1	1	1
4	1	1	1	1	1	1	1
5	1	1	1	1	1	1	1
6	2	2	2	2	2	1	1
7	2	2	2	2	2	1	1
8	2	2	2	2	2	1	1
9	2	2	2	2	2	2	1
10	2	2	2	2	2	2	2
11	2	2	2	2	2	2	2
12	2	2	2	2	2	2	2
13	2	2	2	2	2	2	2
14	2	2	2	2	2	2	2
15	2	2	2	2	2	2	2
16	2	2	2	2	2	2	2
17	2	2	2	2	2	2	2
18	2	2	2	2	2	2	2
19	2	2	2	2	2	2	2
20	2	1	2	2	2	2	2
21	1	1	1	2	2	2	2
22	1	1	1	1	2	2	1
23	1	1	1	1	1	1	1

LANES REQUIRED TO BE OPEN BY HOUR AND TIME OF DAY

FALL SEASON SEPTEMBER 16 THRU November 30

HR/DAY	MON	TUES	WEDS	THUR	FRI	SAT	SUN
0	1	1	1	1	1	1	1
1	1	1	1	1	1	1	1
2	1	1	1	1	1	1	1
3	1	1	1	1	1	1	1
4	1	1	1	1	1	1	1
5	1	1	1	1	1	1	1
6	2	2	2	2	2	1	1
7	2	2	2	2	2	1	1
8	2	2	2	2	2	1	1
9	2	2	2	2	2	2	1
10	2	2	2	2	2	2	2
11	2	2	2	2	2	2	2
12	2	2	2	2	2	2	2
13	2	2	2	2	2	2	2
14	2	2	2	2	2	2	2
15	2	2	2	2	2	2	2
16	2	2	2	2	2	2	2
17	2	2	2	2	2	2	2
18	2	2	2	2	2	2	2
19	1	1	2	2	2	2	2
20	1	1	1	1	1	1	2
21	1	1	1	1	1	1	1
22	1	1	1	1	1	1	1
23	1	1	1	1	1	1	1

WINTER SEAS. DECEMBER 1 THRU February 28

HR/DAY	MON	TUES	WEDS	THUR	FRI	SAT	SUN
0	1	1	1	1	1	1	1
1	1	1	1	1	1	1	1
2	1	1	1	1	1	1	1
3	1	1	1	1	1	1	1
4	1	1	1	1	1	1	1
5	1	1	1	1	1	1	1
6	2	2	2	2	2	1	1
7	2	2	2	2	2	1	1
8	2	2	2	2	2	1	1
9	2	2	2	2	2	1	1
10	2	2	2	2	2	2	1
11	2	2	2	2	2	2	2
12	2	2	2	2	2	2	2
13	2	2	2	2	2	2	2
14	2	2	2	2	2	2	2
15	2	2	2	2	2	2	2
16	2	2	2	2	2	2	2
17	2	2	2	2	2	2	2
18	2	2	2	2	2	2	2
19	1	1	1	1	1	1	1
20	1	1	1	1	1	1	1
21	1	1	1	1	1	1	1
22	1	1	1	1	1	1	1
23	1	1	1	1	1	1	1

NOTES:

1) THE NEW YORK STATE THRUWAY IS A LIMITED ACCESS, HIGH-SPEED, HIGH-VOLUME HIGHWAY. TRAFFIC SHALL BE MAINTAINED IN ACCORDANCE WITH THE *MANUAL ON UNIFORM TRAFFIC CONTROL DEVICES (MUTCD)*, THE *WORK ZONE TRAFFIC CONTROL PLANS*, AND THE *STANDARD SPECIFICATIONS* SECTION 619 AS AMENDED BY THE AUTHORITY.

2) LANE CLOSURES ON THE THRUWAY SHALL ONLY BE ALLOWED IN ACCORDANCE WITH THESE TRAFFIC MANAGEMENT TABLE(S), UNLESS INDICATED OTHERWISE IN THE CONTRACT PLANS OR PROPOSAL DOCUMENTS.

3) LANE CLOSURE CHARTS SHALL APPLY AS FOLLOWS:

- 1,150 VEH/HR/LANE: APPLIES TO ALL WORK REQUIRING LANE CLOSURE(S) EXCEPT AS PERMITTED BELOW.

- 1,300 VEH/HR/LANE: APPLIES TO NON-EVASIVE WORK WHERE WORKERS AND/OR EQUIPMENT ARE LOCATED 4 FT. OR MORE FROM TRAVEL (SPACE) LANE, OR AS APPROVED BY THE THRUWAY PROJECT ENGINEER. WORK SHOULD BE ABLE TO BE IMMEDIATELY STOPPED AND LANE CLOSURE(S) REMOVED IN THE EVENT QUEUES, GREATER THAN 1 MILE, DEVELOP.

NEW YORK STATE OF OPPORTUNITY. Thruway Authority

U.S. CUSTOMARY STANDARD SHEET

LANE CLOSURE CHARTS
1,150 VEHICLES PER HOUR
BUFFALO DIVISION
(SHEET 14 OF 37)

APPROVED SEPTEMBER 1, 2018

/S/ PATRICK THOMPSON, P.E.
DIRECTOR DESIGN SUPPORT
SERVICES BUREAU

ISSUED UNDER DB 18-003

TA 619-33

I-90 WESTBOUND INTERCHANGES 56 TO 57 (1,150 VEH/HR/LANE)

LANES REQUIRED TO BE OPEN BY HOUR AND TIME OF DAY

SPRING SEASON MARCH 1 THRU MAY 20

HR/DAY	MON	TUES	WEDS	THUR	FRI	SAT	SUN
0	1	1	1	1	1	1	1
1	1	1	1	1	1	1	1
2	1	1	1	1	1	1	1
3	1	1	1	1	1	1	1
4	1	1	1	1	1	1	1
5	1	1	1	1	1	1	1
6	1	1	1	1	1	1	1
7	1	1	1	1	2	1	1
8	1	1	1	2	2	2	1
9	1	1	1	2	2	2	1
10	2	1	1	2	2	2	1
11	2	1	2	2	2	2	2
12	2	1	2	2	2	2	2
13	2	2	2	2	2	2	2
14	2	2	2	2	2	2	2
15	2	2	2	2	2	2	2
16	2	2	2	2	2	2	2
17	2	2	2	2	2	1	2
18	2	2	2	2	2	1	1
19	1	1	1	1	2	1	1
20	1	1	1	1	1	1	1
21	1	1	1	1	1	1	1
22	1	1	1	1	1	1	1
23	1	1	1	1	1	1	1

SUMMER SEASON MAY 21 THRU SEPTEMBER 15

HR/DAY	MON	TUES	WEDS	THUR	FRI	SAT	SUN
0	1	1	1	1	1	1	1
1	1	1	1	1	1	1	1
2	1	1	1	1	1	1	1
3	1	1	1	1	1	1	1
4	1	1	1	1	1	1	1
5	1	1	1	1	1	1	1
6	1	1	1	1	1	1	1
7	2	1	1	2	2	1	1
8	2	2	2	2	2	2	1
9	2	2	2	2	2	2	2
10	2	2	2	2	2	2	2
11	2	2	2	2	2	2	2
12	2	2	2	2	2	2	2
13	2	2	2	2	2	2	2
14	2	2	2	2	2	2	2
15	2	2	2	2	2	2	2
16	2	2	2	2	2	2	2
17	2	2	2	2	2	2	2
18	2	2	2	2	2	2	2
19	1	1	1	2	2	1	2
20	1	1	1	1	1	1	1
21	1	1	1	1	1	1	1
22	1	1	1	1	1	1	1
23	1	1	1	1	1	1	1

LANES REQUIRED TO BE OPEN BY HOUR AND TIME OF DAY

FALL SEASON SEPTEMBER 16 THRU November 30

HR/DAY	MON	TUES	WEDS	THUR	FRI	SAT	SUN
0	1	1	1	1	1	1	1
1	1	1	1	1	1	1	1
2	1	1	1	1	1	1	1
3	1	1	1	1	1	1	1
4	1	1	1	1	1	1	1
5	1	1	1	1	1	1	1
6	1	1	1	1	1	1	1
7	1	1	2	2	2	1	1
8	1	1	2	2	2	1	1
9	2	1	2	2	2	2	1
10	2	2	2	2	2	2	2
11	2	2	2	2	2	2	2
12	2	2	2	2	2	2	2
13	2	2	2	2	2	2	2
14	2	2	2	2	2	2	2
15	2	2	2	2	2	2	2
16	2	2	2	2	2	2	2
17	2	2	2	2	2	2	2
18	2	2	2	2	2	1	2
19	1	1	1	1	2	1	1
20	1	1	1	1	1	1	1
21	1	1	1	1	1	1	1
22	1	1	1	1	1	1	1
23	1	1	1	1	1	1	1

WINTER SEAS. DECEMBER 1 THRU February 28

HR/DAY	MON	TUES	WEDS	THUR	FRI	SAT	SUN
0	1	1	1	1	1	1	1
1	1	1	1	1	1	1	1
2	1	1	1	1	1	1	1
3	1	1	1	1	1	1	1
4	1	1	1	1	1	1	1
5	1	1	1	1	1	1	1
6	1	1	1	1	1	1	1
7	1	1	1	1	1	1	1
8	1	1	1	1	1	1	1
9	1	1	1	1	1	1	1
10	1	1	1	1	2	2	1
11	1	1	1	1	2	2	1
12	2	2	2	1	2	2	2
13	2	2	2	2	2	2	2
14	2	2	2	2	2	2	2
15	2	2	2	2	2	2	2
16	2	2	2	2	2	2	1
17	2	2	2	2	2	1	1
18	2	2	2	2	2	1	1
19	1	1	1	1	1	1	1
20	1	1	1	1	1	1	1
21	1	1	1	1	1	1	1
22	1	1	1	1	1	1	1
23	1	1	1	1	1	1	1

I-90 EASTBOUND INTERCHANGES 57 TO 56 (1,150 VEH/HR/LANE)

LANES REQUIRED TO BE OPEN BY HOUR AND TIME OF DAY

SPRING SEASON MARCH 1 THRU MAY 20

HR/DAY	MON	TUES	WEDS	THUR	FRI	SAT	SUN
0	1	1	1	1	1	1	1
1	1	1	1	1	1	1	1
2	1	1	1	1	1	1	1
3	1	1	1	1	1	1	1
4	1	1	1	1	1	1	1
5	1	1	1	1	1	1	1
6	2	1	1	1	1	1	1
7	2	2	2	2	2	1	1
8	2	2	2	2	2	1	1
9	2	1	1	1	1	1	1
10	1	1	1	1	2	1	1
11	2	1	1	2	2	2	2
12	2	1	1	2	2	2	2
13	2	1	2	2	2	2	2
14	2	2	2	2	2	2	2
15	2	2	2	2	2	2	2
16	2	2	2	2	2	2	2
17	2	2	2	2	2	2	2
18	2	1	1	2	2	2	2
19	2	1	1	1	1	1	2
20	1	1	1	1	1	1	2
21	1	1	1	1	1	1	1
22	1	1	1	1	1	1	1
23	1	1	1	1	1	1	1

SUMMER SEASON MAY 21 THRU SEPTEMBER 15

HR/DAY	MON	TUES	WEDS	THUR	FRI	SAT	SUN
0	1	1	1	1	1	1	1
1	1	1	1	1	1	1	1
2	1	1	1	1	1	1	1
3	1	1	1	1	1	1	1
4	1	1	1	1	1	1	1
5	1	1	1	1	1	1	1
6	2	1	2	1	1	1	1
7	2	2	2	2	2	1	1
8	2	2	2	2	2	1	1
9	2	2	2	2	2	2	1
10	2	2	2	2	2	2	2
11	2	2	2	2	2	2	2
12	2	2	2	2	2	2	2
13	2	2	2	2	2	2	2
14	2	2	2	2	2	2	2
15	2	2	2	2	2	2	2
16	2	2	2	2	2	2	2
17	2	2	2	2	2	2	2
18	2	2	2	2	2	2	2
19	2	1	1	2	2	2	2
20	1	1	1	1	2	1	2
21	1	1	1	1	1	1	2
22	1	1	1	1	1	1	1
23	1	1	1	1	1	1	1

LANES REQUIRED TO BE OPEN BY HOUR AND TIME OF DAY

FALL SEASON SEPTEMBER 16 THRU November 30

HR/DAY	MON	TUES	WEDS	THUR	FRI	SAT	SUN
0	1	1	1	1	1	1	1
1	1	1	1	1	1	1	1
2	1	1	1	1	1	1	1
3	1	1	1	1	1	1	1
4	1	1	1	1	1	1	1
5	1	1	1	1	1	1	1
6	1	1	2	2	2	1	1
7	2	2	2	2	2	1	1
8	2	2	2	2	2	1	1
9	1	1	1	2	2	1	1
10	1	1	1	1	2	2	1
11	2	1	2	2	2	2	2
12	2	2	2	2	2	2	2
13	2	2	2	2	2	2	2
14	2	2	2	2	2	2	2
15	2	2	2	2	2	2	2
16	2	2	2	2	2	2	2
17	2	2	2	2	2	2	2
18	1	1	2	2	2	2	2
19	2	1	1	1	1	1	2
20	1	1	1	1	1	1	1
21	1	1	1	1	1	1	1
22	1	1	1	1	1	1	1
23	1	1	1	1	1	1	1

WINTER SEAS. DECEMBER 1 THRU February 28

HR/DAY	MON	TUES	WEDS	THUR	FRI	SAT	SUN
0	1	1	1	1	1	1	1
1	1	1	1	1	1	1	1
2	1	1	1	1	1	1	1
3	1	1	1	1	1	1	1
4	1	1	1	1	1	1	1
5	1	1	1	1	1	1	1
6	2	2	2	2	1	1	1
7	2	2	2	2	2	1	1
8	2	2	2	2	2	1	1
9	1	1	1	1	1	1	1
10	1	1	1	1	1	1	1
11	1	1	1	1	2	2	1
12	2	1	1	1	2	2	2
13	2	2	1	1	2	2	2
14	2	2	2	2	2	2	2
15	2	2	2	2	2	2	2
16	2	2	2	2	2	2	2
17	2	2	2	2	2	1	2
18	1	1	1	1	2	1	1
19	1	1	1	1	1	1	1
20	1	1	1	1	1	1	1
21	1	1	1	1	1	1	1
22	1	1	1	1	1	1	1
23	1	1	1	1	1	1	1

NOTES:

1) THE NEW YORK STATE THRUWAY IS A LIMITED ACCESS, HIGH-SPEED, HIGH-VOLUME HIGHWAY. TRAFFIC SHALL BE MAINTAINED IN ACCORDANCE WITH THE *MANUAL ON UNIFORM TRAFFIC CONTROL DEVICES (MUTCD)*, THE *WORK ZONE TRAFFIC CONTROL PLANS*, AND THE *STANDARD SPECIFICATIONS* SECTION 619 AS AMENDED BY THE AUTHORITY.

2) LANE CLOSURES ON THE THRUWAY SHALL ONLY BE ALLOWED IN ACCORDANCE WITH THESE TRAFFIC MANAGEMENT TABLE(S), UNLESS INDICATED OTHERWISE IN THE CONTRACT PLANS OR PROPOSAL DOCUMENTS.

3) LANE CLOSURE CHARTS SHALL APPLY AS FOLLOWS:

- 1,150 VEH/HR/LANE: APPLIES TO ALL WORK REQUIRING LANE CLOSURE(S) EXCEPT AS PERMITTED BELOW.

- 1,300 VEH/HR/LANE: APPLIES TO NON-EVASIVE WORK WHERE WORKERS AND/OR EQUIPMENT ARE LOCATED 4 FT. OR MORE FROM TRAVEL (SPACE) LANE, OR AS APPROVED BY THE THRUWAY PROJECT ENGINEER. WORK SHOULD BE ABLE TO BE IMMEDIATELY STOPPED AND LANE CLOSURE(S) REMOVED IN THE EVENT QUEUES, GREATER THAN 1 MILE, DEVELOP.

NEW YORK STATE OF OPPORTUNITY. Thruway Authority

U.S. CUSTOMARY STANDARD SHEET

LANE CLOSURE CHARTS
1,150 VEHICLES PER HOUR
BUFFALO DIVISION
(SHEET 15 OF 37)

APPROVED SEPTEMBER 1, 2018

/S/ PATRICK THOMPSON, P.E.
DIRECTOR DESIGN SUPPORT SERVICES BUREAU

ISSUED UNDER DB 18-003

TA 619-33

I-90 WESTBOUND INTERCHANGES 57 TO 57A (1,150 VEH/HR/LANE)

LANES REQUIRED TO BE OPEN BY HOUR AND TIME OF DAY

SPRING SEASON MARCH 1 THRU MAY 20

HR/DAY	MON	TUES	WEDS	THUR	FRI	SAT	SUN
0	1	1	1	1	1	1	1
1	1	1	1	1	1	1	1
2	1	1	1	1	1	1	1
3	1	1	1	1	1	1	1
4	1	1	1	1	1	1	1
5	1	1	1	1	1	1	1
6	1	1	1	1	1	1	1
7	1	1	1	1	1	1	1
8	1	1	1	1	1	1	1
9	1	1	1	1	2	2	1
10	1	1	1	1	2	2	1
11	2	1	1	1	2	2	1
12	2	1	1	1	2	2	2
13	2	1	1	1	2	1	2
14	2	1	1	2	2	1	2
15	2	1	2	2	2	1	1
16	2	2	2	2	2	1	1
17	1	1	2	2	2	1	1
18	1	1	1	1	2	1	1
19	1	1	1	1	1	1	1
20	1	1	1	1	1	1	1
21	1	1	1	1	1	1	1
22	1	1	1	1	1	1	1
23	1	1	1	1	1	1	1

SUMMER SEASON MAY 21 THRU SEPTEMBER 15

HR/DAY	MON	TUES	WEDS	THUR	FRI	SAT	SUN
0	1	1	1	1	1	1	1
1	1	1	1	1	1	1	1
2	1	1	1	1	1	1	1
3	1	1	1	1	1	1	1
4	1	1	1	1	1	1	1
5	1	1	1	1	1	1	1
6	1	1	1	1	1	1	1
7	1	1	1	1	1	1	1
8	1	1	1	1	2	2	1
9	2	1	1	2	2	2	2
10	2	2	2	2	2	2	2
11	2	2	2	2	2	2	2
12	2	2	2	2	2	2	2
13	2	2	2	2	2	2	2
14	2	2	2	2	2	2	2
15	2	2	2	2	2	2	2
16	2	2	2	2	2	2	2
17	2	2	2	2	2	2	2
18	1	1	2	2	2	1	2
19	1	1	1	1	2	1	1
20	1	1	1	1	1	1	1
21	1	1	1	1	1	1	1
22	1	1	1	1	1	1	1
23	1	1	1	1	1	1	1

LANES REQUIRED TO BE OPEN BY HOUR AND TIME OF DAY

FALL SEASON SEPTEMBER 16 THRU November 30

HR/DAY	MON	TUES	WEDS	THUR	FRI	SAT	SUN
0	1	1	1	1	1	1	1
1	1	1	1	1	1	1	1
2	1	1	1	1	1	1	1
3	1	1	1	1	1	1	1
4	1	1	1	1	1	1	1
5	1	1	1	1	1	1	1
6	1	1	1	1	1	1	1
7	1	1	1	1	1	1	1
8	1	1	1	1	1	1	1
9	1	1	1	1	2	2	1
10	1	1	1	1	2	2	2
11	1	1	2	2	2	2	2
12	1	1	2	2	2	2	2
13	1	1	2	1	2	2	2
14	1	1	2	2	2	2	2
15	2	2	2	2	2	1	2
16	2	2	2	2	2	1	2
17	2	2	2	2	2	1	2
18	1	1	1	1	2	1	2
19	1	1	1	1	1	1	1
20	1	1	1	1	1	1	1
21	1	1	1	1	1	1	1
22	1	1	1	1	1	1	1
23	1	1	1	1	1	1	1

WINTER SEAS. DECEMBER 1 THRU February 28

HR/DAY	MON	TUES	WEDS	THUR	FRI	SAT	SUN
0	1	1	1	1	1	1	1
1	1	1	1	1	1	1	1
2	1	1	1	1	1	1	1
3	1	1	1	1	1	1	1
4	1	1	1	1	1	1	1
5	1	1	1	1	1	1	1
6	1	1	1	1	1	1	1
7	1	1	1	1	1	1	1
8	1	1	1	1	1	1	1
9	1	1	1	1	1	1	1
10	1	1	1	1	1	1	1
11	1	1	1	1	1	2	1
12	1	1	1	1	2	2	1
13	1	1	1	1	2	1	1
14	1	1	1	1	2	1	1
15	1	1	1	1	2	1	1
16	2	1	2	2	2	1	1
17	1	1	1	1	2	1	1
18	1	1	1	1	1	1	1
19	1	1	1	1	1	1	1
20	1	1	1	1	1	1	1
21	1	1	1	1	1	1	1
22	1	1	1	1	1	1	1
23	1	1	1	1	1	1	1

I-90 EASTBOUND INTERCHANGES 57A TO 57 (1,150 VEH/HR/LANE)

LANES REQUIRED TO BE OPEN BY HOUR AND TIME OF DAY

SPRING SEASON MARCH 1 THRU MAY 20

HR/DAY	MON	TUES	WEDS	THUR	FRI	SAT	SUN
0	1	1	1	1	1	1	1
1	1	1	1	1	1	1	1
2	1	1	1	1	1	1	1
3	1	1	1	1	1	1	1
4	1	1	1	1	1	1	1
5	1	1	1	1	1	1	1
6	1	1	1	1	1	1	1
7	1	1	1	1	1	1	1
8	1	1	1	1	1	1	1
9	1	1	1	1	1	1	1
10	1	1	1	1	1	1	1
11	1	1	1	1	1	1	1
12	2	1	1	1	2	1	2
13	2	1	1	1	2	1	2
14	2	1	1	1	2	2	2
15	2	2	2	2	2	2	2
16	2	1	2	2	2	2	2
17	2	1	1	2	2	1	2
18	2	1	1	1	2	1	2
19	1	1	1	1	1	1	2
20	1	1	1	1	1	1	1
21	1	1	1	1	1	1	1
22	1	1	1	1	1	1	1
23	1	1	1	1	1	1	1

SUMMER SEASON MAY 21 THRU SEPTEMBER 15

HR/DAY	MON	TUES	WEDS	THUR	FRI	SAT	SUN
0	1	1	1	1	1	1	1
1	1	1	1	1	1	1	1
2	1	1	1	1	1	1	1
3	1	1	1	1	1	1	1
4	1	1	1	1	1	1	1
5	1	1	1	1	1	1	1
6	1	1	1	1	1	1	1
7	1	1	1	1	1	1	1
8	1	1	1	1	1	1	1
9	1	1	1	1	1	1	1
10	1	1	1	1	2	2	1
11	2	1	1	2	2	2	2
12	2	2	2	2	2	2	2
13	2	2	2	2	2	2	2
14	2	2	2	2	2	2	2
15	2	2	2	2	2	2	2
16	2	2	2	2	2	2	2
17	2	2	2	2	2	2	2
18	2	1	1	2	2	2	2
19	1	1	1	1	2	1	2
20	1	1	1	1	1	1	2
21	1	1	1	1	1	1	2
22	1	1	1	1	1	1	1
23	1	1	1	1	1	1	1

LANES REQUIRED TO BE OPEN BY HOUR AND TIME OF DAY

FALL SEASON SEPTEMBER 16 THRU November 30

HR/DAY	MON	TUES	WEDS	THUR	FRI	SAT	SUN
0	1	1	1	1	1	1	1
1	1	1	1	1	1	1	1
2	1	1	1	1	1	1	1
3	1	1	1	1	1	1	1
4	1	1	1	1	1	1	1
5	1	1	1	1	1	1	1
6	1	1	1	1	1	1	1
7	1	1	1	1	1	1	1
8	1	1	1	1	1	1	1
9	1	1	1	1	1	1	1
10	1	1	1	1	1	1	1
11	1	1	1	1	1	1	2
12	2	1	1	1	1	2	2
13	2	1	2	1	2	2	2
14	2	1	2	2	2	2	2
15	2	2	2	2	2	2	2
16	2	2	2	2	2	2	2
17	2	2	2	2	2	1	2
18	1	1	1	1	2	1	2
19	1	1	1	1	1	1	2
20	1	1	1	1	1	1	1
21	1	1	1	1	1	1	1
22	1	1	1	1	1	1	1
23	1	1	1	1	1	1	1

WINTER SEAS. DECEMBER 1 THRU February 28

HR/DAY	MON	TUES	WEDS	THUR	FRI	SAT	SUN
0	1	1	1	1	1	1	1
1	1	1	1	1	1	1	1
2	1	1	1	1	1	1	1
3	1	1	1	1	1	1	1
4	1	1	1	1	1	1	1
5	1	1	1	1	1	1	1
6	1	1	1	1	1	1	1
7	1	1	1	1	1	1	1
8	1	1	1	1	1	1	1
9	1	1	1	1	1	1	1
10	1	1	1	1	1	1	1
11	1	1	1	1	1	1	1
12	1	1	1	1	1	1	1
13	1	1	1	1	1	1	1
14	1	1	1	1	2	1	2
15	2	1	1	1	2	1	2
16	1	1	1	1	2	1	1
17	1	1	1	1	2	1	1
18	1	1	1	1	1	1	1
19	1	1	1	1	1	1	1
20	1	1	1	1	1	1	1
21	1	1	1	1	1	1	1
22	1	1	1	1	1	1	1
23	1	1	1	1	1	1	1

NOTES:

1) THE NEW YORK STATE THRUWAY IS A LIMITED ACCESS, HIGH-SPEED, HIGH-VOLUME HIGHWAY. TRAFFIC SHALL BE MAINTAINED IN ACCORDANCE WITH THE *MANUAL ON UNIFORM TRAFFIC CONTROL DEVICES (MUTCD)*, THE *WORK ZONE TRAFFIC CONTROL PLANS*, AND THE *STANDARD SPECIFICATIONS* SECTION 619 AS AMENDED BY THE AUTHORITY.

2) LANE CLOSURES ON THE THRUWAY SHALL ONLY BE ALLOWED IN ACCORDANCE WITH THESE TRAFFIC MANAGEMENT TABLE(S), UNLESS INDICATED OTHERWISE IN THE CONTRACT PLANS OR PROPOSAL DOCUMENTS.

3) LANE CLOSURE CHARTS SHALL APPLY AS FOLLOWS:

- 1,150 VEH/HR/LANE: APPLIES TO ALL WORK REQUIRING LANE CLOSURE(S) EXCEPT AS PERMITTED BELOW.

- 1,300 VEH/HR/LANE: APPLIES TO NON-EVASIVE WORK WHERE WORKERS AND/OR EQUIPMENT ARE LOCATED 4 FT. OR MORE FROM TRAVEL (SPACE) LANE, OR AS APPROVED BY THE THRUWAY PROJECT ENGINEER. WORK SHOULD BE ABLE TO BE IMMEDIATELY STOPPED AND LANE CLOSURE(S) REMOVED IN THE EVENT QUEUES, GREATER THAN 1 MILE, DEVELOP.

NEW YORK STATE OF OPPORTUNITY. Thruway Authority

U.S. CUSTOMARY STANDARD SHEET

LANE CLOSURE CHARTS
1,150 VEHICLES PER HOUR
BUFFALO DIVISION
(SHEET 16 OF 37)

APPROVED SEPTEMBER 1, 2018

/S/ PATRICK THOMPSON, P.E.
DIRECTOR DESIGN SUPPORT
SERVICES BUREAU

ISSUED UNDER DB 18-003

TA 619-33

I-90 WESTBOUND INTERCHANGES 57A TO 58 (1,150 VEH/HR/LANE)

LANES REQUIRED TO BE OPEN BY HOUR AND TIME OF DAY

SPRING SEASON MARCH 1 THRU MAY 20

HR/DAY	MON	TUES	WEDS	THUR	FRI	SAT	SUN
0	1	1	1	1	1	1	1
1	1	1	1	1	1	1	1
2	1	1	1	1	1	1	1
3	1	1	1	1	1	1	1
4	1	1	1	1	1	1	1
5	1	1	1	1	1	1	1
6	1	1	1	1	1	1	1
7	1	1	1	1	1	1	1
8	1	1	1	1	1	1	1
9	1	1	1	1	2	1	1
10	1	1	1	1	2	1	1
11	1	1	1	1	2	1	1
12	1	1	1	1	2	1	1
13	1	1	1	1	2	1	1
14	1	1	1	1	2	1	1
15	1	1	1	2	2	1	1
16	1	1	1	2	2	1	1
17	1	1	1	1	2	1	1
18	1	1	1	1	1	1	1
19	1	1	1	1	1	1	1
20	1	1	1	1	1	1	1
21	1	1	1	1	1	1	1
22	1	1	1	1	1	1	1
23	1	1	1	1	1	1	1

SUMMER SEASON MAY 21 THRU SEPTEMBER 15

HR/DAY	MON	TUES	WEDS	THUR	FRI	SAT	SUN
0	1	1	1	1	1	1	1
1	1	1	1	1	1	1	1
2	1	1	1	1	1	1	1
3	1	1	1	1	1	1	1
4	1	1	1	1	1	1	1
5	1	1	1	1	1	1	1
6	1	1	1	1	1	1	1
7	1	1	1	1	1	1	1
8	1	1	1	1	1	1	1
9	2	1	1	2	2	2	2
10	2	2	2	2	2	2	2
11	2	2	2	2	2	2	2
12	2	2	2	2	2	2	2
13	2	1	2	2	2	2	2
14	2	1	2	2	2	2	2
15	2	2	2	2	2	2	2
16	2	2	2	2	2	2	2
17	1	1	1	2	2	1	2
18	1	1	1	1	2	1	2
19	1	1	1	1	1	1	1
20	1	1	1	1	1	1	1
21	1	1	1	1	1	1	1
22	1	1	1	1	1	1	1
23	1	1	1	1	1	1	1

LANES REQUIRED TO BE OPEN BY HOUR AND TIME OF DAY

FALL SEASON SEPTEMBER 16 THRU November 30

HR/DAY	MON	TUES	WEDS	THUR	FRI	SAT	SUN
0	1	1	1	1	1	1	1
1	1	1	1	1	1	1	1
2	1	1	1	1	1	1	1
3	1	1	1	1	1	1	1
4	1	1	1	1	1	1	1
5	1	1	1	1	1	1	1
6	1	1	1	1	1	1	1
7	1	1	1	1	1	1	1
8	1	1	1	1	1	1	1
9	1	1	1	1	1	1	1
10	1	1	1	1	2	2	1
11	1	1	1	1	2	2	2
12	1	1	1	1	2	2	2
13	1	1	1	1	2	1	2
14	1	1	1	1	2	1	2
15	1	1	1	1	2	1	2
16	1	1	1	1	2	1	2
17	1	1	1	1	2	1	2
18	1	1	1	1	2	1	2
19	1	1	1	1	1	1	1
20	1	1	1	1	1	1	1
21	1	1	1	1	1	1	1
22	1	1	1	1	1	1	1
23	1	1	1	1	1	1	1

WINTER SEAS. DECEMBER 1 THRU February 28

HR/DAY	MON	TUES	WEDS	THUR	FRI	SAT	SUN
0	1	1	1	1	1	1	1
1	1	1	1	1	1	1	1
2	1	1	1	1	1	1	1
3	1	1	1	1	1	1	1
4	1	1	1	1	1	1	1
5	1	1	1	1	1	1	1
6	1	1	1	1	1	1	1
7	1	1	1	1	1	1	1
8	1	1	1	1	1	1	1
9	1	1	1	1	1	1	1
10	1	1	1	1	1	1	1
11	1	1	1	1	1	1	1
12	1	1	1	1	1	1	1
13	1	1	1	1	1	1	1
14	1	1	1	1	1	1	1
15	1	1	1	1	1	1	1
16	1	1	1	1	2	1	1
17	1	1	1	1	1	1	1
18	1	1	1	1	1	1	1
19	1	1	1	1	1	1	1
20	1	1	1	1	1	1	1
21	1	1	1	1	1	1	1
22	1	1	1	1	1	1	1
23	1	1	1	1	1	1	1

I-90 EASTBOUND INTERCHANGES 58 TO 57A (1,150 VEH/HR/LANE)

LANES REQUIRED TO BE OPEN BY HOUR AND TIME OF DAY

SPRING SEASON MARCH 1 THRU MAY 20

HR/DAY	MON	TUES	WEDS	THUR	FRI	SAT	SUN
0	1	1	1	1	1	1	1
1	1	1	1	1	1	1	1
2	1	1	1	1	1	1	1
3	1	1	1	1	1	1	1
4	1	1	1	1	1	1	1
5	1	1	1	1	1	1	1
6	1	1	1	1	1	1	1
7	1	1	1	1	1	1	1
8	1	1	1	1	1	1	1
9	1	1	1	1	1	1	1
10	1	1	1	1	1	1	1
11	1	1	1	1	1	1	1
12	1	1	1	1	1	1	2
13	1	1	1	1	1	1	2
14	2	1	1	1	2	1	2
15	2	1	1	2	2	1	2
16	2	1	2	2	2	1	2
17	2	1	1	1	2	1	2
18	1	1	1	1	1	1	2
19	1	1	1	1	1	1	2
20	1	1	1	1	1	1	1
21	1	1	1	1	1	1	1
22	1	1	1	1	1	1	1
23	1	1	1	1	1	1	1

SUMMER SEASON MAY 21 THRU SEPTEMBER 15

HR/DAY	MON	TUES	WEDS	THUR	FRI	SAT	SUN
0	1	1	1	1	1	1	1
1	1	1	1	1	1	1	1
2	1	1	1	1	1	1	1
3	1	1	1	1	1	1	1
4	1	1	1	1	1	1	1
5	1	1	1	1	1	1	1
6	1	1	1	1	1	1	1
7	1	1	1	1	1	1	1
8	1	1	1	1	1	1	1
9	1	1	1	1	1	1	1
10	1	1	1	1	2	2	1
11	2	1	1	2	2	2	2
12	2	1	1	2	2	2	2
13	2	1	1	2	2	2	2
14	2	1	2	2	2	2	2
15	2	2	2	2	2	2	2
16	2	2	2	2	2	2	2
17	2	2	2	2	2	2	2
18	2	1	1	1	2	1	2
19	1	1	1	1	2	1	2
20	1	1	1	1	1	1	2
21	1	1	1	1	1	1	1
22	1	1	1	1	1	1	1
23	1	1	1	1	1	1	1

LANES REQUIRED TO BE OPEN BY HOUR AND TIME OF DAY

FALL SEASON SEPTEMBER 16 THRU November 30

HR/DAY	MON	TUES	WEDS	THUR	FRI	SAT	SUN
0	1	1	1	1	1	1	1
1	1	1	1	1	1	1	1
2	1	1	1	1	1	1	1
3	1	1	1	1	1	1	1
4	1	1	1	1	1	1	1
5	1	1	1	1	1	1	1
6	1	1	1	1	1	1	1
7	1	1	1	1	1	1	1
8	1	1	1	1	1	1	1
9	1	1	1	1	1	1	1
10	1	1	1	1	1	1	1
11	1	1	1	1	1	1	2
12	1	1	1	1	1	1	2
13	1	1	1	1	1	1	2
14	2	1	1	1	2	1	2
15	2	1	2	2	2	1	2
16	2	1	2	2	2	1	2
17	1	1	1	2	2	1	2
18	1	1	1	1	1	1	2
19	1	1	1	1	1	1	2
20	1	1	1	1	1	1	1
21	1	1	1	1	1	1	1
22	1	1	1	1	1	1	1
23	1	1	1	1	1	1	1

WINTER SEAS. DECEMBER 1 THRU February 28

HR/DAY	MON	TUES	WEDS	THUR	FRI	SAT	SUN
0	1	1	1	1	1	1	1
1	1	1	1	1	1	1	1
2	1	1	1	1	1	1	1
3	1	1	1	1	1	1	1
4	1	1	1	1	1	1	1
5	1	1	1	1	1	1	1
6	1	1	1	1	1	1	1
7	1	1	1	1	1	1	1
8	1	1	1	1	1	1	1
9	1	1	1	1	1	1	1
10	1	1	1	1	1	1	1
11	1	1	1	1	1	1	1
12	1	1	1	1	1	1	1
13	1	1	1	1	1	1	1
14	1	1	1	1	1	1	1
15	1	1	1	1	2	1	1
16	1	1	1	1	2	1	1
17	1	1	1	1	1	1	1
18	1	1	1	1	1	1	1
19	1	1	1	1	1	1	1
20	1	1	1	1	1	1	1
21	1	1	1	1	1	1	1
22	1	1	1	1	1	1	1
23	1	1	1	1	1	1	1

NOTES:

1) THE NEW YORK STATE THRUWAY IS A LIMITED ACCESS, HIGH-SPEED, HIGH-VOLUME HIGHWAY. TRAFFIC SHALL BE MAINTAINED IN ACCORDANCE WITH THE *MANUAL ON UNIFORM TRAFFIC CONTROL DEVICES (MUTCD)*, THE *WORK ZONE TRAFFIC CONTROL PLANS*, AND THE *STANDARD SPECIFICATIONS* SECTION 619 AS AMENDED BY THE AUTHORITY.

2) LANE CLOSURES ON THE THRUWAY SHALL ONLY BE ALLOWED IN ACCORDANCE WITH THESE TRAFFIC MANAGEMENT TABLE(S), UNLESS INDICATED OTHERWISE IN THE CONTRACT PLANS OR PROPOSAL DOCUMENTS.

3) LANE CLOSURE CHARTS SHALL APPLY AS FOLLOWS:

- 1,150 VEH/HR/LANE: APPLIES TO ALL WORK REQUIRING LANE CLOSURE(S) EXCEPT AS PERMITTED BELOW.

- 1,300 VEH/HR/LANE: APPLIES TO NON-EVASIVE WORK WHERE WORKERS AND/OR EQUIPMENT ARE LOCATED 4 FT. OR MORE FROM TRAVEL (SPACE) LANE, OR AS APPROVED BY THE THRUWAY PROJECT ENGINEER. WORK SHOULD BE ABLE TO BE IMMEDIATELY STOPPED AND LANE CLOSURE(S) REMOVED IN THE EVENT QUEUES, GREATER THAN 1 MILE, DEVELOP.

NEW YORK STATE OF OPPORTUNITY. Thruway Authority

U.S. CUSTOMARY STANDARD SHEET

LANE CLOSURE CHARTS
1,150 VEHICLES PER HOUR
BUFFALO DIVISION
(SHEET 17 OF 37)

APPROVED SEPTEMBER 1, 2018

/S/ PATRICK THOMPSON, P.E.
DIRECTOR DESIGN SUPPORT
SERVICES BUREAU

ISSUED UNDER DB 18-003

TA 619-33

I-90 WESTBOUND INTERCHANGES 58 TO 59 (1,150 VEH/HR/LANE)

LANES REQUIRED TO BE OPEN BY HOUR AND TIME OF DAY

SPRING SEASON MARCH 1 THRU MAY 20

HR/DAY	MON	TUES	WEDS	THUR	FRI	SAT	SUN
0	1	1	1	1	1	1	1
1	1	1	1	1	1	1	1
2	1	1	1	1	1	1	1
3	1	1	1	1	1	1	1
4	1	1	1	1	1	1	1
5	1	1	1	1	1	1	1
6	1	1	1	1	1	1	1
7	1	1	1	1	1	1	1
8	1	1	1	1	1	1	1
9	1	1	1	1	1	1	1
10	1	1	1	1	2	1	1
11	1	1	1	1	2	1	1
12	1	1	1	1	2	1	1
13	1	1	1	1	2	1	1
14	1	1	1	1	2	1	1
15	1	1	1	1	2	1	1
16	1	1	1	1	2	1	1
17	1	1	1	1	2	1	1
18	1	1	1	1	1	1	1
19	1	1	1	1	1	1	1
20	1	1	1	1	1	1	1
21	1	1	1	1	1	1	1
22	1	1	1	1	1	1	1
23	1	1	1	1	1	1	1

SUMMER SEASON MAY 21 THRU SEPTEMBER 15

HR/DAY	MON	TUES	WEDS	THUR	FRI	SAT	SUN
0	1	1	1	1	1	1	1
1	1	1	1	1	1	1	1
2	1	1	1	1	1	1	1
3	1	1	1	1	1	1	1
4	1	1	1	1	1	1	1
5	1	1	1	1	1	1	1
6	1	1	1	1	1	1	1
7	1	1	1	1	1	1	1
8	1	1	1	1	1	1	1
9	1	1	1	1	2	2	1
10	2	1	1	2	2	2	2
11	2	1	1	2	2	2	2
12	2	1	1	2	2	2	2
13	2	1	1	2	2	2	2
14	2	1	1	2	2	2	2
15	2	1	1	2	2	2	2
16	2	1	1	2	2	2	2
17	1	1	1	1	2	1	2
18	1	1	1	1	2	1	2
19	1	1	1	1	1	1	1
20	1	1	1	1	1	1	1
21	1	1	1	1	1	1	1
22	1	1	1	1	1	1	1
23	1	1	1	1	1	1	1

LANES REQUIRED TO BE OPEN BY HOUR AND TIME OF DAY

FALL SEASON SEPTEMBER 16 THRU November 30

HR/DAY	MON	TUES	WEDS	THUR	FRI	SAT	SUN
0	1	1	1	1	1	1	1
1	1	1	1	1	1	1	1
2	1	1	1	1	1	1	1
3	1	1	1	1	1	1	1
4	1	1	1	1	1	1	1
5	1	1	1	1	1	1	1
6	1	1	1	1	1	1	1
7	1	1	1	1	1	1	1
8	1	1	1	1	1	1	1
9	1	1	1	1	1	1	1
10	1	1	1	1	2	2	1
11	1	1	1	1	2	2	2
12	1	1	1	1	2	2	2
13	1	1	1	1	2	1	2
14	1	1	1	1	2	1	2
15	1	1	1	1	2	1	2
16	1	1	1	1	2	1	2
17	1	1	1	1	2	1	2
18	1	1	1	1	2	1	2
19	1	1	1	1	1	1	1
20	1	1	1	1	1	1	1
21	1	1	1	1	1	1	1
22	1	1	1	1	1	1	1
23	1	1	1	1	1	1	1

WINTER SEAS. DECEMBER 1 THRU February 28

HR/DAY	MON	TUES	WEDS	THUR	FRI	SAT	SUN
0	1	1	1	1	1	1	1
1	1	1	1	1	1	1	1
2	1	1	1	1	1	1	1
3	1	1	1	1	1	1	1
4	1	1	1	1	1	1	1
5	1	1	1	1	1	1	1
6	1	1	1	1	1	1	1
7	1	1	1	1	1	1	1
8	1	1	1	1	1	1	1
9	1	1	1	1	1	1	1
10	1	1	1	1	1	1	1
11	1	1	1	1	1	1	1
12	1	1	1	1	1	1	1
13	1	1	1	1	1	1	1
14	1	1	1	1	1	1	1
15	1	1	1	1	1	1	1
16	1	1	1	1	1	1	1
17	1	1	1	1	1	1	1
18	1	1	1	1	1	1	1
19	1	1	1	1	1	1	1
20	1	1	1	1	1	1	1
21	1	1	1	1	1	1	1
22	1	1	1	1	1	1	1
23	1	1	1	1	1	1	1

I-90 EASTBOUND INTERCHANGES 59 TO 58 (1,150 VEH/HR/LANE)

LANES REQUIRED TO BE OPEN BY HOUR AND TIME OF DAY

SPRING SEASON MARCH 1 THRU MAY 20

HR/DAY	MON	TUES	WEDS	THUR	FRI	SAT	SUN
0	1	1	1	1	1	1	1
1	1	1	1	1	1	1	1
2	1	1	1	1	1	1	1
3	1	1	1	1	1	1	1
4	1	1	1	1	1	1	1
5	1	1	1	1	1	1	1
6	1	1	1	1	1	1	1
7	1	1	1	1	1	1	1
8	1	1	1	1	1	1	1
9	1	1	1	1	1	1	1
10	1	1	1	1	1	1	1
11	1	1	1	1	1	1	1
12	1	1	1	1	1	1	2
13	2	1	1	1	2	1	2
14	2	1	1	1	2	1	2
15	2	1	1	2	2	1	2
16	2	1	1	1	2	1	2
17	2	1	1	1	2	1	2
18	1	1	1	1	1	1	2
19	1	1	1	1	1	1	1
20	1	1	1	1	1	1	1
21	1	1	1	1	1	1	1
22	1	1	1	1	1	1	1
23	1	1	1	1	1	1	1

SUMMER SEASON MAY 21 THRU SEPTEMBER 15

HR/DAY	MON	TUES	WEDS	THUR	FRI	SAT	SUN
0	1	1	1	1	1	1	1
1	1	1	1	1	1	1	1
2	1	1	1	1	1	1	1
3	1	1	1	1	1	1	1
4	1	1	1	1	1	1	1
5	1	1	1	1	1	1	1
6	1	1	1	1	1	1	1
7	1	1	1	1	1	1	1
8	1	1	1	1	1	1	1
9	1	1	1	1	1	1	1
10	1	1	1	1	1	2	1
11	2	1	1	1	2	2	2
12	2	1	1	2	2	2	2
13	2	1	1	2	2	2	2
14	2	1	2	2	2	2	2
15	2	2	2	2	2	2	2
16	2	2	2	2	2	2	2
17	2	1	2	2	2	2	2
18	1	1	1	1	2	1	2
19	1	1	1	1	1	1	2
20	1	1	1	1	1	1	2
21	1	1	1	1	1	1	1
22	1	1	1	1	1	1	1
23	1	1	1	1	1	1	1

LANES REQUIRED TO BE OPEN BY HOUR AND TIME OF DAY

FALL SEASON SEPTEMBER 16 THRU November 30

HR/DAY	MON	TUES	WEDS	THUR	FRI	SAT	SUN
0	1	1	1	1	1	1	1
1	1	1	1	1	1	1	1
2	1	1	1	1	1	1	1
3	1	1	1	1	1	1	1
4	1	1	1	1	1	1	1
5	1	1	1	1	1	1	1
6	1	1	1	1	1	1	1
7	1	1	1	1	1	1	1
8	1	1	1	1	1	1	1
9	1	1	1	1	1	1	1
10	1	1	1	1	1	1	1
11	1	1	1	1	1	1	2
12	1	1	1	1	1	1	2
13	1	1	1	1	1	1	2
14	2	1	1	1	2	1	2
15	2	2	2	2	2	1	2
16	2	2	2	2	2	1	2
17	1	1	1	2	2	1	2
18	1	1	1	1	1	1	2
19	1	1	1	1	1	1	2
20	1	1	1	1	1	1	1
21	1	1	1	1	1	1	1
22	1	1	1	1	1	1	1
23	1	1	1	1	1	1	1

WINTER SEAS. DECEMBER 1 THRU February 28

HR/DAY	MON	TUES	WEDS	THUR	FRI	SAT	SUN
0	1	1	1	1	1	1	1
1	1	1	1	1	1	1	1
2	1	1	1	1	1	1	1
3	1	1	1	1	1	1	1
4	1	1	1	1	1	1	1
5	1	1	1	1	1	1	1
6	1	1	1	1	1	1	1
7	1	1	1	1	1	1	1
8	1	1	1	1	1	1	1
9	1	1	1	1	1	1	1
10	1	1	1	1	1	1	1
11	1	1	1	1	1	1	1
12	1	1	1	1	1	1	1
13	1	1	1	1	1	1	1
14	1	1	1	1	1	1	1
15	1	1	1	1	2	1	1
16	1	1	1	1	1	1	1
17	1	1	1	1	1	1	1
18	1	1	1	1	1	1	1
19	1	1	1	1	1	1	1
20	1	1	1	1	1	1	1
21	1	1	1	1	1	1	1
22	1	1	1	1	1	1	1
23	1	1	1	1	1	1	1

NOTES:

1) THE NEW YORK STATE THRUWAY IS A LIMITED ACCESS, HIGH-SPEED, HIGH-VOLUME HIGHWAY. TRAFFIC SHALL BE MAINTAINED IN ACCORDANCE WITH THE *MANUAL ON UNIFORM TRAFFIC CONTROL DEVICES (MUTCD)*, THE *WORK ZONE TRAFFIC CONTROL PLANS*, AND THE *STANDARD SPECIFICATIONS* SECTION 619 AS AMENDED BY THE AUTHORITY.

2) LANE CLOSURES ON THE THRUWAY SHALL ONLY BE ALLOWED IN ACCORDANCE WITH THESE TRAFFIC MANAGEMENT TABLE(S), UNLESS INDICATED OTHERWISE IN THE CONTRACT PLANS OR PROPOSAL DOCUMENTS.

3) LANE CLOSURE CHARTS SHALL APPLY AS FOLLOWS:

- 1,150 VEH/HR/LANE: APPLIES TO ALL WORK REQUIRING LANE CLOSURE(S) EXCEPT AS PERMITTED BELOW.

- 1,300 VEH/HR/LANE: APPLIES TO NON-EVASIVE WORK WHERE WORKERS AND/OR EQUIPMENT ARE LOCATED 4 FT. OR MORE FROM TRAVEL (SPACE) LANE, OR AS APPROVED BY THE THRUWAY PROJECT ENGINEER. WORK SHOULD BE ABLE TO BE IMMEDIATELY STOPPED AND LANE CLOSURE(S) REMOVED IN THE EVENT QUEUES, GREATER THAN 1 MILE, DEVELOP.

NEW YORK STATE OF OPPORTUNITY. Thruway Authority

U.S. CUSTOMARY STANDARD SHEET

LANE CLOSURE CHARTS
1,150 VEHICLES PER HOUR
BUFFALO DIVISION
(SHEET 18 OF 37)

APPROVED SEPTEMBER 1, 2018

/S/ PATRICK THOMPSON, P.E.
DIRECTOR DESIGN SUPPORT SERVICES BUREAU

ISSUED UNDER DB 18-003

TA 619-33

I-90 WESTBOUND INTERCHANGES 59 TO 60 (1,150 VEH/HR/LANE)

LANES REQUIRED TO BE OPEN BY HOUR AND TIME OF DAY

SPRING SEASON MARCH 1 THRU MAY 20

HR/DAY	MON	TUES	WEDS	THUR	FRI	SAT	SUN
0	1	1	1	1	1	1	1
1	1	1	1	1	1	1	1
2	1	1	1	1	1	1	1
3	1	1	1	1	1	1	1
4	1	1	1	1	1	1	1
5	1	1	1	1	1	1	1
6	1	1	1	1	1	1	1
7	1	1	1	1	1	1	1
8	1	1	1	1	1	1	1
9	1	1	1	1	1	1	1
10	1	1	1	1	1	1	1
11	1	1	1	1	1	1	1
12	1	1	1	1	1	1	1
13	1	1	1	1	1	1	1
14	1	1	1	1	1	1	1
15	1	1	1	1	1	1	1
16	1	1	1	1	1	1	1
17	1	1	1	1	1	1	1
18	1	1	1	1	1	1	1
19	1	1	1	1	1	1	1
20	1	1	1	1	1	1	1
21	1	1	1	1	1	1	1
22	1	1	1	1	1	1	1
23	1	1	1	1	1	1	1

SUMMER SEASON MAY 21 THRU SEPTEMBER 15

HR/DAY	MON	TUES	WEDS	THUR	FRI	SAT	SUN
0	1	1	1	1	1	1	1
1	1	1	1	1	1	1	1
2	1	1	1	1	1	1	1
3	1	1	1	1	1	1	1
4	1	1	1	1	1	1	1
5	1	1	1	1	1	1	1
6	1	1	1	1	1	1	1
7	1	1	1	1	1	1	1
8	1	1	1	1	1	1	1
9	1	1	1	1	1	1	1
10	1	1	1	1	2	2	2
11	1	1	1	1	2	2	2
12	1	1	1	1	2	2	2
13	1	1	1	1	2	1	2
14	1	1	1	1	2	1	2
15	1	1	1	1	2	1	2
16	1	1	1	1	2	1	2
17	1	1	1	1	1	1	1
18	1	1	1	1	1	1	1
19	1	1	1	1	1	1	1
20	1	1	1	1	1	1	1
21	1	1	1	1	1	1	1
22	1	1	1	1	1	1	1
23	1	1	1	1	1	1	1

LANES REQUIRED TO BE OPEN BY HOUR AND TIME OF DAY

FALL SEASON SEPTEMBER 16 THRU November 30

HR/DAY	MON	TUES	WEDS	THUR	FRI	SAT	SUN
0	1	1	1	1	1	1	1
1	1	1	1	1	1	1	1
2	1	1	1	1	1	1	1
3	1	1	1	1	1	1	1
4	1	1	1	1	1	1	1
5	1	1	1	1	1	1	1
6	1	1	1	1	1	1	1
7	1	1	1	1	1	1	1
8	1	1	1	1	1	1	1
9	1	1	1	1	1	1	1
10	1	1	1	1	1	1	1
11	1	1	1	1	1	1	1
12	1	1	1	1	1	1	1
13	1	1	1	1	1	1	1
14	1	1	1	1	1	1	1
15	1	1	1	1	1	1	1
16	1	1	1	1	1	1	1
17	1	1	1	1	1	1	1
18	1	1	1	1	1	1	1
19	1	1	1	1	1	1	1
20	1	1	1	1	1	1	1
21	1	1	1	1	1	1	1
22	1	1	1	1	1	1	1
23	1	1	1	1	1	1	1

WINTER SEAS. DECEMBER 1 THRU February 28

HR/DAY	MON	TUES	WEDS	THUR	FRI	SAT	SUN
0	1	1	1	1	1	1	1
1	1	1	1	1	1	1	1
2	1	1	1	1	1	1	1
3	1	1	1	1	1	1	1
4	1	1	1	1	1	1	1
5	1	1	1	1	1	1	1
6	1	1	1	1	1	1	1
7	1	1	1	1	1	1	1
8	1	1	1	1	1	1	1
9	1	1	1	1	1	1	1
10	1	1	1	1	1	1	1
11	1	1	1	1	1	1	1
12	1	1	1	1	1	1	1
13	1	1	1	1	1	1	1
14	1	1	1	1	1	1	1
15	1	1	1	1	1	1	1
16	1	1	1	1	1	1	1
17	1	1	1	1	1	1	1
18	1	1	1	1	1	1	1
19	1	1	1	1	1	1	1
20	1	1	1	1	1	1	1
21	1	1	1	1	1	1	1
22	1	1	1	1	1	1	1
23	1	1	1	1	1	1	1

I-90 EASTBOUND INTERCHANGES 60 TO 59 (1,150 VEH/HR/LANE)

LANES REQUIRED TO BE OPEN BY HOUR AND TIME OF DAY

SPRING SEASON MARCH 1 THRU MAY 20

HR/DAY	MON	TUES	WEDS	THUR	FRI	SAT	SUN
0	1	1	1	1	1	1	1
1	1	1	1	1	1	1	1
2	1	1	1	1	1	1	1
3	1	1	1	1	1	1	1
4	1	1	1	1	1	1	1
5	1	1	1	1	1	1	1
6	1	1	1	1	1	1	1
7	1	1	1	1	1	1	1
8	1	1	1	1	1	1	1
9	1	1	1	1	1	1	1
10	1	1	1	1	1	1	1
11	1	1	1	1	1	1	1
12	1	1	1	1	1	1	1
13	1	1	1	1	1	1	1
14	1	1	1	1	1	1	1
15	1	1	1	1	1	1	2
16	1	1	1	1	1	1	2
17	1	1	1	1	1	1	1
18	1	1	1	1	1	1	1
19	1	1	1	1	1	1	1
20	1	1	1	1	1	1	1
21	1	1	1	1	1	1	1
22	1	1	1	1	1	1	1
23	1	1	1	1	1	1	1

SUMMER SEASON MAY 21 THRU SEPTEMBER 15

HR/DAY	MON	TUES	WEDS	THUR	FRI	SAT	SUN
0	1	1	1	1	1	1	1
1	1	1	1	1	1	1	1
2	1	1	1	1	1	1	1
3	1	1	1	1	1	1	1
4	1	1	1	1	1	1	1
5	1	1	1	1	1	1	1
6	1	1	1	1	1	1	1
7	1	1	1	1	1	1	1
8	1	1	1	1	1	1	1
9	1	1	1	1	1	1	1
10	1	1	1	1	1	1	1
11	1	1	1	1	1	1	1
12	1	1	1	1	1	1	2
13	1	1	1	1	2	1	2
14	1	1	1	1	2	1	2
15	1	1	1	1	2	1	2
16	1	1	1	1	2	1	2
17	1	1	1	1	1	1	2
18	1	1	1	1	1	1	2
19	1	1	1	1	1	1	1
20	1	1	1	1	1	1	1
21	1	1	1	1	1	1	1
22	1	1	1	1	1	1	1
23	1	1	1	1	1	1	1

LANES REQUIRED TO BE OPEN BY HOUR AND TIME OF DAY

FALL SEASON SEPTEMBER 16 THRU November 30

HR/DAY	MON	TUES	WEDS	THUR	FRI	SAT	SUN
0	1	1	1	1	1	1	1
1	1	1	1	1	1	1	1
2	1	1	1	1	1	1	1
3	1	1	1	1	1	1	1
4	1	1	1	1	1	1	1
5	1	1	1	1	1	1	1
6	1	1	1	1	1	1	1
7	1	1	1	1	1	1	1
8	1	1	1	1	1	1	1
9	1	1	1	1	1	1	1
10	1	1	1	1	1	1	1
11	1	1	1	1	1	1	1
12	1	1	1	1	1	1	2
13	1	1	1	1	1	1	2
14	1	1	1	1	1	1	2
15	1	1	1	1	1	1	2
16	1	1	1	1	1	1	2
17	1	1	1	1	1	1	2
18	1	1	1	1	1	1	1
19	1	1	1	1	1	1	1
20	1	1	1	1	1	1	1
21	1	1	1	1	1	1	1
22	1	1	1	1	1	1	1
23	1	1	1	1	1	1	1

WINTER SEAS. DECEMBER 1 THRU February 28

HR/DAY	MON	TUES	WEDS	THUR	FRI	SAT	SUN
0	1	1	1	1	1	1	1
1	1	1	1	1	1	1	1
2	1	1	1	1	1	1	1
3	1	1	1	1	1	1	1
4	1	1	1	1	1	1	1
5	1	1	1	1	1	1	1
6	1	1	1	1	1	1	1
7	1	1	1	1	1	1	1
8	1	1	1	1	1	1	1
9	1	1	1	1	1	1	1
10	1	1	1	1	1	1	1
11	1	1	1	1	1	1	1
12	1	1	1	1	1	1	1
13	1	1	1	1	1	1	1
14	1	1	1	1	1	1	1
15	1	1	1	1	1	1	1
16	1	1	1	1	1	1	1
17	1	1	1	1	1	1	1
18	1	1	1	1	1	1	1
19	1	1	1	1	1	1	1
20	1	1	1	1	1	1	1
21	1	1	1	1	1	1	1
22	1	1	1	1	1	1	1
23	1	1	1	1	1	1	1

NOTES:

1) THE NEW YORK STATE THRUWAY IS A LIMITED ACCESS, HIGH-SPEED, HIGH-VOLUME HIGHWAY. TRAFFIC SHALL BE MAINTAINED IN ACCORDANCE WITH THE *MANUAL ON UNIFORM TRAFFIC CONTROL DEVICES (MUTCD)*, THE *WORK ZONE TRAFFIC CONTROL PLANS*, AND THE *STANDARD SPECIFICATIONS* SECTION 619 AS AMENDED BY THE AUTHORITY.

2) LANE CLOSURES ON THE THRUWAY SHALL ONLY BE ALLOWED IN ACCORDANCE WITH THESE TRAFFIC MANAGEMENT TABLE(S), UNLESS INDICATED OTHERWISE IN THE CONTRACT PLANS OR PROPOSAL DOCUMENTS.

3) LANE CLOSURE CHARTS SHALL APPLY AS FOLLOWS:

- 1,150 VEH/HR/LANE: APPLIES TO ALL WORK REQUIRING LANE CLOSURE(S) EXCEPT AS PERMITTED BELOW.

- 1,300 VEH/HR/LANE: APPLIES TO NON-EVASIVE WORK WHERE WORKERS AND/OR EQUIPMENT ARE LOCATED 4 FT. OR MORE FROM TRAVEL (SPACE) LANE, OR AS APPROVED BY THE THRUWAY PROJECT ENGINEER. WORK SHOULD BE ABLE TO BE IMMEDIATELY STOPPED AND LANE CLOSURE(S) REMOVED IN THE EVENT QUEUES, GREATER THAN 1 MILE, DEVELOP.

NEW YORK STATE OF OPPORTUNITY. Thruway Authority

U.S. CUSTOMARY STANDARD SHEET

LANE CLOSURE CHARTS
1,150 VEHICLES PER HOUR
BUFFALO DIVISION
(SHEET 19 OF 37)

APPROVED SEPTEMBER 1, 2018

/S/ PATRICK THOMPSON, P.E.
DIRECTOR DESIGN SUPPORT SERVICES BUREAU

ISSUED UNDER DB 18-003

TA 619-33

I-90 WESTBOUND INTERCHANGES 60 TO 61 (1,150 VEH/HR/LANE)

LANES REQUIRED TO BE OPEN BY HOUR AND TIME OF DAY

SPRING SEASON MARCH 1 THRU MAY 20

HR/DAY	MON	TUES	WEDS	THUR	FRI	SAT	SUN
0	1	1	1	1	1	1	1
1	1	1	1	1	1	1	1
2	1	1	1	1	1	1	1
3	1	1	1	1	1	1	1
4	1	1	1	1	1	1	1
5	1	1	1	1	1	1	1
6	1	1	1	1	1	1	1
7	1	1	1	1	1	1	1
8	1	1	1	1	1	1	1
9	1	1	1	1	1	1	1
10	1	1	1	1	1	1	1
11	1	1	1	1	1	1	1
12	1	1	1	1	1	1	1
13	1	1	1	1	1	1	1
14	1	1	1	1	1	1	1
15	1	1	1	1	1	1	1
16	1	1	1	1	1	1	1
17	1	1	1	1	1	1	1
18	1	1	1	1	1	1	1
19	1	1	1	1	1	1	1
20	1	1	1	1	1	1	1
21	1	1	1	1	1	1	1
22	1	1	1	1	1	1	1
23	1	1	1	1	1	1	1

SUMMER SEASON MAY 21 THRU SEPTEMBER 15

HR/DAY	MON	TUES	WEDS	THUR	FRI	SAT	SUN
0	1	1	1	1	1	1	1
1	1	1	1	1	1	1	1
2	1	1	1	1	1	1	1
3	1	1	1	1	1	1	1
4	1	1	1	1	1	1	1
5	1	1	1	1	1	1	1
6	1	1	1	1	1	1	1
7	1	1	1	1	1	1	1
8	1	1	1	1	1	1	1
9	1	1	1	1	1	1	1
10	1	1	1	1	1	2	1
11	1	1	1	1	2	2	2
12	1	1	1	1	2	1	2
13	1	1	1	1	2	1	2
14	1	1	1	1	2	1	2
15	1	1	1	1	2	1	2
16	1	1	1	1	2	1	2
17	1	1	1	1	1	1	1
18	1	1	1	1	1	1	1
19	1	1	1	1	1	1	1
20	1	1	1	1	1	1	1
21	1	1	1	1	1	1	1
22	1	1	1	1	1	1	1
23	1	1	1	1	1	1	1

LANES REQUIRED TO BE OPEN BY HOUR AND TIME OF DAY

FALL SEASON SEPTEMBER 16 THRU November 30

HR/DAY	MON	TUES	WEDS	THUR	FRI	SAT	SUN
0	1	1	1	1	1	1	1
1	1	1	1	1	1	1	1
2	1	1	1	1	1	1	1
3	1	1	1	1	1	1	1
4	1	1	1	1	1	1	1
5	1	1	1	1	1	1	1
6	1	1	1	1	1	1	1
7	1	1	1	1	1	1	1
8	1	1	1	1	1	1	1
9	1	1	1	1	1	1	1
10	1	1	1	1	1	1	1
11	1	1	1	1	1	1	1
12	1	1	1	1	1	1	1
13	1	1	1	1	1	1	2
14	1	1	1	1	1	1	2
15	1	1	1	1	1	1	1
16	1	1	1	1	1	1	1
17	1	1	1	1	1	1	1
18	1	1	1	1	1	1	1
19	1	1	1	1	1	1	1
20	1	1	1	1	1	1	1
21	1	1	1	1	1	1	1
22	1	1	1	1	1	1	1
23	1	1	1	1	1	1	1

WINTER SEAS. DECEMBER 1 THRU February 28

HR/DAY	MON	TUES	WEDS	THUR	FRI	SAT	SUN
0	1	1	1	1	1	1	1
1	1	1	1	1	1	1	1
2	1	1	1	1	1	1	1
3	1	1	1	1	1	1	1
4	1	1	1	1	1	1	1
5	1	1	1	1	1	1	1
6	1	1	1	1	1	1	1
7	1	1	1	1	1	1	1
8	1	1	1	1	1	1	1
9	1	1	1	1	1	1	1
10	1	1	1	1	1	1	1
11	1	1	1	1	1	1	1
12	1	1	1	1	1	1	1
13	1	1	1	1	1	1	1
14	1	1	1	1	1	1	1
15	1	1	1	1	1	1	1
16	1	1	1	1	1	1	1
17	1	1	1	1	1	1	1
18	1	1	1	1	1	1	1
19	1	1	1	1	1	1	1
20	1	1	1	1	1	1	1
21	1	1	1	1	1	1	1
22	1	1	1	1	1	1	1
23	1	1	1	1	1	1	1

I-90 EASTBOUND INTERCHANGES 61 TO 60 (1,150 VEH/HR/LANE)

LANES REQUIRED TO BE OPEN BY HOUR AND TIME OF DAY

SPRING SEASON MARCH 1 THRU MAY 20

HR/DAY	MON	TUES	WEDS	THUR	FRI	SAT	SUN
0	1	1	1	1	1	1	1
1	1	1	1	1	1	1	1
2	1	1	1	1	1	1	1
3	1	1	1	1	1	1	1
4	1	1	1	1	1	1	1
5	1	1	1	1	1	1	1
6	1	1	1	1	1	1	1
7	1	1	1	1	1	1	1
8	1	1	1	1	1	1	1
9	1	1	1	1	1	1	1
10	1	1	1	1	1	1	1
11	1	1	1	1	1	1	1
12	1	1	1	1	1	1	1
13	1	1	1	1	1	1	1
14	1	1	1	1	1	1	1
15	1	1	1	1	1	1	2
16	1	1	1	1	1	1	1
17	1	1	1	1	1	1	1
18	1	1	1	1	1	1	1
19	1	1	1	1	1	1	1
20	1	1	1	1	1	1	1
21	1	1	1	1	1	1	1
22	1	1	1	1	1	1	1
23	1	1	1	1	1	1	1

SUMMER SEASON MAY 21 THRU SEPTEMBER 15

HR/DAY	MON	TUES	WEDS	THUR	FRI	SAT	SUN
0	1	1	1	1	1	1	1
1	1	1	1	1	1	1	1
2	1	1	1	1	1	1	1
3	1	1	1	1	1	1	1
4	1	1	1	1	1	1	1
5	1	1	1	1	1	1	1
6	1	1	1	1	1	1	1
7	1	1	1	1	1	1	1
8	1	1	1	1	1	1	1
9	1	1	1	1	1	1	1
10	1	1	1	1	1	1	1
11	1	1	1	1	1	1	1
12	1	1	1	1	1	1	2
13	1	1	1	1	2	1	2
14	1	1	1	1	2	1	2
15	1	1	1	1	2	1	2
16	1	1	1	1	2	1	2
17	1	1	1	1	1	1	2
18	1	1	1	1	1	1	2
19	1	1	1	1	1	1	1
20	1	1	1	1	1	1	1
21	1	1	1	1	1	1	1
22	1	1	1	1	1	1	1
23	1	1	1	1	1	1	1

LANES REQUIRED TO BE OPEN BY HOUR AND TIME OF DAY

FALL SEASON SEPTEMBER 16 THRU November 30

HR/DAY	MON	TUES	WEDS	THUR	FRI	SAT	SUN
0	1	1	1	1	1	1	1
1	1	1	1	1	1	1	1
2	1	1	1	1	1	1	1
3	1	1	1	1	1	1	1
4	1	1	1	1	1	1	1
5	1	1	1	1	1	1	1
6	1	1	1	1	1	1	1
7	1	1	1	1	1	1	1
8	1	1	1	1	1	1	1
9	1	1	1	1	1	1	1
10	1	1	1	1	1	1	1
11	1	1	1	1	1	1	1
12	1	1	1	1	1	1	1
13	1	1	1	1	1	1	2
14	1	1	1	1	1	1	2
15	1	1	1	1	1	1	2
16	1	1	1	1	1	1	2
17	1	1	1	1	1	1	1
18	1	1	1	1	1	1	1
19	1	1	1	1	1	1	1
20	1	1	1	1	1	1	1
21	1	1	1	1	1	1	1
22	1	1	1	1	1	1	1
23	1	1	1	1	1	1	1

WINTER SEAS. DECEMBER 1 THRU February 28

HR/DAY	MON	TUES	WEDS	THUR	FRI	SAT	SUN
0	1	1	1	1	1	1	1
1	1	1	1	1	1	1	1
2	1	1	1	1	1	1	1
3	1	1	1	1	1	1	1
4	1	1	1	1	1	1	1
5	1	1	1	1	1	1	1
6	1	1	1	1	1	1	1
7	1	1	1	1	1	1	1
8	1	1	1	1	1	1	1
9	1	1	1	1	1	1	1
10	1	1	1	1	1	1	1
11	1	1	1	1	1	1	1
12	1	1	1	1	1	1	1
13	1	1	1	1	1	1	1
14	1	1	1	1	1	1	1
15	1	1	1	1	1	1	1
16	1	1	1	1	1	1	1
17	1	1	1	1	1	1	1
18	1	1	1	1	1	1	1
19	1	1	1	1	1	1	1
20	1	1	1	1	1	1	1
21	1	1	1	1	1	1	1
22	1	1	1	1	1	1	1
23	1	1	1	1	1	1	1

NOTES:

1) THE NEW YORK STATE THRUWAY IS A LIMITED ACCESS, HIGH-SPEED, HIGH-VOLUME HIGHWAY. TRAFFIC SHALL BE MAINTAINED IN ACCORDANCE WITH THE *MANUAL ON UNIFORM TRAFFIC CONTROL DEVICES (MUTCD)*, THE *WORK ZONE TRAFFIC CONTROL PLANS*, AND THE *STANDARD SPECIFICATIONS* SECTION 619 AS AMENDED BY THE AUTHORITY.

2) LANE CLOSURES ON THE THRUWAY SHALL ONLY BE ALLOWED IN ACCORDANCE WITH THESE TRAFFIC MANAGEMENT TABLE(S), UNLESS INDICATED OTHERWISE IN THE CONTRACT PLANS OR PROPOSAL DOCUMENTS.

3) LANE CLOSURE CHARTS SHALL APPLY AS FOLLOWS:

- 1,150 VEH/HR/LANE: APPLIES TO ALL WORK REQUIRING LANE CLOSURE(S) EXCEPT AS PERMITTED BELOW.

- 1,300 VEH/HR/LANE: APPLIES TO NON-EVASIVE WORK WHERE WORKERS AND/OR EQUIPMENT ARE LOCATED 4 FT. OR MORE FROM TRAVEL (SPACE) LANE, OR AS APPROVED BY THE THRUWAY PROJECT ENGINEER. WORK SHOULD BE ABLE TO BE IMMEDIATELY STOPPED AND LANE CLOSURE(S) REMOVED IN THE EVENT QUEUES, GREATER THAN 1 MILE, DEVELOP.

NEW YORK STATE OF OPPORTUNITY. Thruway Authority

U.S. CUSTOMARY STANDARD SHEET

LANE CLOSURE CHARTS
1,150 VEHICLES PER HOUR
BUFFALO DIVISION
(SHEET 20 OF 37)

APPROVED SEPTEMBER 1, 2018

/S/ PATRICK THOMPSON, P.E.
DIRECTOR DESIGN SUPPORT
SERVICES BUREAU

ISSUED UNDER DB 18-003

TA 619-33

NIAGARA: I-190 NORTHBOUND INTERCHANGES N0 TO N1 (1,150 VEH/HR/LANE)

LANES REQUIRED TO BE OPEN BY HOUR AND TIME OF DAY

SPRING SEASON MARCH 1 THRU MAY 20

HR/DAY	MON	TUES	WEDS	THUR	FRI	SAT	SUN
0	1	1	1	1	1	1	1
1	1	1	1	1	1	1	1
2	1	1	1	1	1	1	1
3	1	1	1	1	1	1	1
4	1	1	1	1	1	1	1
5	1	1	1	1	1	1	1
6	3	3	3	3	3	1	1
7	3	3	3	3	3	1	1
8	3	3	3	3	3	1	1
9	3	2	3	2	2	2	1
10	2	2	2	2	2	2	2
11	2	2	2	2	2	2	2
12	2	2	2	2	2	2	2
13	2	2	2	2	2	2	2
14	2	2	2	2	2	2	2
15	2	2	2	2	2	2	2
16	2	2	2	2	2	2	2
17	2	2	3	2	3	2	2
18	2	2	2	2	3	3	2
19	2	2	2	2	2	2	2
20	1	1	2	2	2	2	2
21	1	1	1	1	2	1	1
22	1	1	1	1	1	1	1
23	1	1	1	1	1	1	1

SUMMER SEASON MAY 21 THRU SEPTEMBER 15

HR/DAY	MON	TUES	WEDS	THUR	FRI	SAT	SUN
0	1	1	1	1	1	1	1
1	1	1	1	1	1	1	1
2	1	1	1	1	1	1	1
3	1	1	1	1	1	1	1
4	1	1	1	1	1	1	1
5	2	1	1	2	1	1	1
6	3	3	3	3	3	1	1
7	3	3	3	3	3	1	1
8	3	3	3	3	3	1	1
9	3	2	3	3	2	2	1
10	2	2	2	2	2	2	2
11	2	2	2	2	2	2	2
12	2	2	2	2	2	2	2
13	2	2	2	2	2	2	2
14	2	2	2	2	2	2	2
15	2	2	2	2	3	2	2
16	2	2	2	2	3	2	2
17	2	3	3	3	3	2	2
18	2	2	2	2	3	2	2
19	2	2	2	2	2	2	2
20	2	2	2	2	2	2	2
21	1	1	2	2	2	2	1
22	1	1	1	1	2	1	1
23	1	1	1	1	1	1	1

LANES REQUIRED TO BE OPEN BY HOUR AND TIME OF DAY

FALL SEASON SEPTEMBER 16 THRU November 30

HR/DAY	MON	TUES	WEDS	THUR	FRI	SAT	SUN
0	1	1	1	1	1	1	1
1	1	1	1	1	1	1	1
2	1	1	1	1	1	1	1
3	1	1	1	1	1	1	1
4	1	1	1	1	1	1	1
5	1	1	1	2	1	1	1
6	3	3	3	3	3	1	1
7	3	3	3	3	3	1	1
8	3	3	3	3	3	2	1
9	2	3	2	3	3	2	1
10	2	2	2	2	2	2	2
11	2	2	2	2	2	2	2
12	2	2	2	2	2	2	2
13	2	2	2	2	2	2	2
14	2	2	2	2	3	2	2
15	2	2	2	3	3	2	2
16	2	2	2	3	3	2	2
17	2	2	2	3	3	2	2
18	2	2	2	2	3	3	2
19	2	2	2	2	2	2	2
20	1	1	1	1	2	2	1
21	1	1	1	1	2	1	1
22	1	1	1	1	1	1	1
23	1	1	1	1	1	1	1

WINTER SEAS. DECEMBER 1 THRU February 28

HR/DAY	MON	TUES	WEDS	THUR	FRI	SAT	SUN
0	1	1	1	1	1	1	1
1	1	1	1	1	1	1	1
2	1	1	1	1	1	1	1
3	1	1	1	1	1	1	1
4	1	1	1	1	1	1	1
5	1	1	1	1	1	1	1
6	3	3	3	3	3	1	1
7	3	3	3	3	3	1	1
8	3	3	3	3	3	1	1
9	2	3	3	3	2	1	1
10	2	2	2	2	2	2	1
11	2	2	2	2	2	2	2
12	2	2	2	2	2	2	2
13	2	2	2	2	2	2	2
14	2	2	2	2	2	2	2
15	2	2	2	2	2	2	2
16	2	2	2	2	2	2	2
17	2	3	2	2	3	2	2
18	2	2	2	2	3	2	2
19	2	2	2	2	2	2	1
20	1	1	1	1	1	1	1
21	1	1	1	1	1	1	1
22	1	1	1	1	1	1	1
23	1	1	1	1	1	1	1

NIAGARA: I-190 SOUTHBOUND INTERCHANGES N1 TO N0 (1,150 VEH/HR/LANE)

LANES REQUIRED TO BE OPEN BY HOUR AND TIME OF DAY

SPRING SEASON MARCH 1 THRU MAY 20

HR/DAY	MON	TUES	WEDS	THUR	FRI	SAT	SUN
0	1	1	1	1	1	1	1
1	1	1	1	1	1	1	1
2	1	1	1	1	1	1	1
3	1	1	1	1	1	1	1
4	1	1	1	1	1	1	1
5	1	1	1	1	1	1	1
6	2	2	2	2	2	1	1
7	2	2	2	2	2	2	1
8	2	2	2	2	2	2	1
9	2	2	2	2	2	2	2
10	2	2	2	2	2	2	2
11	2	2	2	2	3	2	2
12	2	2	2	3	3	2	2
13	2	2	3	3	3	2	2
14	3	3	3	3	3	2	2
15	3	3	3	3	3	2	2
16	3	3	3	3	3	2	2
17	3	3	3	3	3	2	2
18	3	3	3	3	3	2	2
19	2	2	2	2	2	2	2
20	2	2	2	2	2	1	2
21	2	2	2	2	2	2	1
22	2	2	2	2	2	2	2
23	1	1	1	1	2	2	1

SUMMER SEASON MAY 21 THRU SEPTEMBER 15

HR/DAY	MON	TUES	WEDS	THUR	FRI	SAT	SUN
0	1	1	1	1	1	1	1
1	1	1	1	1	1	1	1
2	1	1	1	1	1	1	1
3	1	1	1	1	1	1	1
4	1	1	1	1	1	1	1
5	1	1	1	1	1	1	1
6	2	2	2	2	2	1	1
7	3	2	2	3	3	2	1
8	3	2	2	2	3	2	1
9	2	2	2	2	2	2	2
10	2	2	2	2	3	2	2
11	3	3	3	3	3	3	2
12	3	3	3	3	3	3	2
13	3	3	3	3	3	3	2
14	3	3	3	3	3	3	2
15	3	3	3	3	3	3	2
16	3	3	3	3	3	2	2
17	3	3	3	3	3	2	2
18	3	3	3	3	3	2	2
19	2	2	2	2	2	2	2
20	2	2	2	2	2	2	2
21	2	2	2	2	2	2	1
22	1	2	2	2	2	2	1
23	2	1	1	2	2	2	1

LANES REQUIRED TO BE OPEN BY HOUR AND TIME OF DAY

FALL SEASON SEPTEMBER 16 THRU November 30

HR/DAY	MON	TUES	WEDS	THUR	FRI	SAT	SUN
0	1	1	1	1	1	1	1
1	1	1	1	1	1	1	1
2	1	1	1	1	1	1	1
3	1	1	1	1	1	1	1
4	1	1	1	1	1	1	1
5	1	1	1	1	1	1	1
6	2	2	2	2	2	1	1
7	2	2	2	3	3	1	1
8	2	2	2	3	3	2	2
9	2	2	2	2	2	2	2
10	2	2	2	2	2	2	2
11	2	2	2	2	3	3	2
12	2	2	2	3	3	3	2
13	2	3	3	3	3	2	2
14	3	3	3	3	3	2	2
15	3	3	3	3	3	2	2
16	3	3	3	3	3	2	2
17	3	3	3	3	3	2	2
18	3	3	3	3	3	2	2
19	2	2	2	2	2	2	2
20	2	2	2	2	2	1	2
21	2	2	2	2	2	2	1
22	2	2	2	2	2	2	1
23	1	1	1	1	2	1	1

WINTER SEAS. DECEMBER 1 THRU February 28

HR/DAY	MON	TUES	WEDS	THUR	FRI	SAT	SUN
0	1	1	1	1	1	1	1
1	1	1	1	1	1	1	1
2	1	1	1	1	1	1	1
3	1	1	1	1	1	1	1
4	1	1	1	1	1	1	1
5	1	1	1	1	1	1	1
6	2	2	2	2	2	1	1
7	2	2	2	2	2	1	1
8	2	2	2	2	2	2	1
9	2	2	2	2	2	2	2
10	2	2	2	2	2	2	2
11	2	2	2	2	2	2	2
12	2	3	3	3	3	2	2
13	2	3	3	3	3	2	2
14	3	3	3	3	3	2	2
15	3	3	3	3	3	2	3
16	3	3	3	3	3	2	2
17	3	3	3	3	3	2	2
18	3	3	3	3	3	2	2
19	2	2	2	2	2	1	1
20	2	2	2	2	2	1	1
21	2	2	2	2	2	2	1
22	2	2	2	2	3	2	1
23	1	1	1	1	2	1	1

NOTES:

1) THE NEW YORK STATE THRUWAY IS A LIMITED ACCESS, HIGH-SPEED, HIGH-VOLUME HIGHWAY. TRAFFIC SHALL BE MAINTAINED IN ACCORDANCE WITH THE *MANUAL ON UNIFORM TRAFFIC CONTROL DEVICES (MUTCD)*, THE *WORK ZONE TRAFFIC CONTROL PLANS*, AND THE *STANDARD SPECIFICATIONS* SECTION 619 AS AMENDED BY THE AUTHORITY.

2) LANE CLOSURES ON THE THRUWAY SHALL ONLY BE ALLOWED IN ACCORDANCE WITH THESE TRAFFIC MANAGEMENT TABLE(S), UNLESS INDICATED OTHERWISE IN THE CONTRACT PLANS OR PROPOSAL DOCUMENTS.

3) LANE CLOSURE CHARTS SHALL APPLY AS FOLLOWS:

- 1,150 VEH/HR/LANE: APPLIES TO ALL WORK REQUIRING LANE CLOSURE(S) EXCEPT AS PERMITTED BELOW.

- 1,300 VEH/HR/LANE: APPLIES TO NON-EVASIVE WORK WHERE WORKERS AND/OR EQUIPMENT ARE LOCATED 4 FT. OR MORE FROM TRAVEL (SPACE) LANE, OR AS APPROVED BY THE THRUWAY PROJECT ENGINEER. WORK SHOULD BE ABLE TO BE IMMEDIATELY STOPPED AND LANE CLOSURE(S) REMOVED IN THE EVENT QUEUES, GREATER THAN 1 MILE, DEVELOP.

NEW YORK STATE OF OPPORTUNITY. Thruway Authority

U.S. CUSTOMARY STANDARD SHEET

LANE CLOSURE CHARTS
1,150 VEHICLES PER HOUR
BUFFALO DIVISION
(SHEET 21 OF 37)

APPROVED SEPTEMBER 1, 2018

/S/ PATRICK THOMPSON, P.E.
DIRECTOR DESIGN SUPPORT SERVICES BUREAU

ISSUED UNDER DB 18-003

TA 619-33

NIAGARA: I-190 NORTHBOUND INTERCHANGES N1 TO N2 (1,150 VEH/HR/LANE)

LANES REQUIRED TO BE OPEN BY HOUR AND TIME OF DAY

SPRING SEASON MARCH 1 THRU MAY 20

HR/DAY	MON	TUES	WEDS	THUR	FRI	SAT	SUN
0	1	1	1	1	1	1	1
1	1	1	1	1	1	1	1
2	1	1	1	1	1	1	1
3	1	1	1	1	1	1	1
4	1	1	1	1	1	1	1
5	1	1	1	1	1	1	1
6	3	3	3	3	3	1	1
7	3	3	3	3	3	1	1
8	3	3	3	3	3	2	1
9	3	3	3	3	3	2	1
10	2	2	2	2	2	2	2
11	2	2	2	2	2	2	2
12	2	2	2	2	2	2	2
13	2	2	2	2	2	2	3
14	2	2	2	2	2	2	2
15	3	2	2	2	3	2	2
16	2	2	2	2	2	2	3
17	2	2	3	2	3	3	2
18	2	2	3	2	3	3	2
19	2	2	2	2	2	2	2
20	2	1	1	1	2	2	2
21	1	1	1	1	2	1	1
22	1	1	1	1	1	1	1
23	1	1	1	1	1	1	1

SUMMER SEASON MAY 21 THRU SEPTEMBER 15

HR/DAY	MON	TUES	WEDS	THUR	FRI	SAT	SUN
0	1	1	1	1	1	1	1
1	1	1	1	1	1	1	1
2	1	1	1	1	1	1	1
3	1	1	1	1	1	1	1
4	1	1	1	1	1	1	1
5	2	2	1	1	2	1	1
6	3	3	3	3	3	1	1
7	3	3	3	3	3	1	1
8	3	3	3	3	3	2	1
9	3	3	3	3	3	2	1
10	2	2	2	2	2	2	2
11	2	2	2	2	3	2	2
12	2	2	2	3	3	2	2
13	2	2	2	2	3	2	2
14	3	2	2	3	3	2	2
15	3	3	3	3	3	2	2
16	3	3	3	3	3	2	2
17	3	3	3	3	3	2	2
18	2	3	2	3	3	2	2
19	2	2	2	2	2	2	2
20	2	2	2	2	2	2	2
21	2	1	2	2	2	2	2
22	1	1	1	2	2	1	1
23	1	1	1	1	1	1	1

LANES REQUIRED TO BE OPEN BY HOUR AND TIME OF DAY

FALL SEASON SEPTEMBER 16 THRU November 30

HR/DAY	MON	TUES	WEDS	THUR	FRI	SAT	SUN
0	1	1	1	1	1	1	1
1	1	1	1	1	1	1	1
2	1	1	1	1	1	1	1
3	1	1	1	1	1	1	1
4	1	1	1	1	1	1	1
5	1	2	2	2	2	1	1
6	3	3	3	3	3	1	1
7	3	3	3	3	3	1	1
8	3	3	3	3	3	2	1
9	3	3	3	3	3	2	1
10	2	3	3	2	2	2	2
11	2	3	3	2	2	2	2
12	2	3	3	2	2	2	2
13	3	3	3	2	2	2	2
14	3	3	3	3	3	2	2
15	3	3	3	3	3	2	2
16	2	3	3	3	3	2	3
17	2	3	3	3	3	3	2
18	2	3	3	3	3	3	2
19	2	2	2	2	2	2	2
20	1	2	2	2	2	2	2
21	1	1	1	1	2	1	1
22	1	1	1	1	1	1	1
23	1	1	1	1	1	1	1

WINTER SEAS. DECEMBER 1 THRU February 28

HR/DAY	MON	TUES	WEDS	THUR	FRI	SAT	SUN
0	1	1	1	1	1	1	1
1	1	1	1	1	1	1	1
2	1	1	1	1	1	1	1
3	1	1	1	1	1	1	1
4	1	1	1	1	1	1	1
5	1	1	1	1	1	1	1
6	3	3	3	3	3	1	1
7	3	3	3	3	3	1	1
8	3	3	3	3	3	1	1
9	3	3	3	3	3	2	1
10	2	2	2	2	2	2	1
11	2	2	2	2	2	2	2
12	2	2	2	2	2	2	2
13	2	2	2	2	2	2	2
14	2	3	2	2	2	2	2
15	2	2	2	2	2	2	2
16	2	2	2	2	2	2	2
17	2	2	3	3	3	3	2
18	2	3	3	2	3	3	2
19	2	2	2	2	2	2	2
20	1	1	1	1	2	1	1
21	1	1	1	1	1	1	1
22	1	1	1	1	1	1	1
23	1	1	1	1	1	1	1

NIAGARA: I-190 SOUTHBOUND INTERCHANGES N2 TO N1 (1,150 VEH/HR/LANE)

LANES REQUIRED TO BE OPEN BY HOUR AND TIME OF DAY

SPRING SEASON MARCH 1 THRU MAY 20

HR/DAY	MON	TUES	WEDS	THUR	FRI	SAT	SUN
0	1	1	1	1	1	1	1
1	1	1	1	1	1	1	1
2	1	1	1	1	1	1	1
3	1	1	1	1	1	1	1
4	1	1	1	1	1	1	1
5	1	1	1	1	1	1	1
6	2	2	2	2	2	1	1
7	2	2	2	2	2	2	1
8	2	2	2	2	2	2	1
9	2	2	2	2	2	2	2
10	2	2	2	2	2	2	2
11	2	2	2	2	3	2	2
12	2	2	2	2	3	2	2
13	2	3	3	3	3	2	2
14	3	3	3	3	3	2	2
15	3	3	3	3	3	2	2
16	3	3	3	3	3	2	2
17	3	3	3	3	3	2	2
18	3	3	3	3	3	2	2
19	2	2	2	2	2	2	2
20	2	2	2	2	2	1	2
21	2	2	2	2	2	2	1
22	2	2	2	1	3	3	1
23	1	1	1	1	2	2	1

SUMMER SEASON MAY 21 THRU SEPTEMBER 15

HR/DAY	MON	TUES	WEDS	THUR	FRI	SAT	SUN
0	1	1	1	1	1	1	1
1	1	1	1	1	1	1	1
2	1	1	1	1	1	1	1
3	1	1	1	1	1	1	1
4	1	1	1	1	1	1	1
5	1	1	1	1	1	1	1
6	2	2	2	2	2	1	1
7	2	2	2	2	2	1	1
8	2	2	2	2	2	2	1
9	2	2	2	2	2	2	2
10	2	2	2	2	2	2	2
11	2	2	3	3	3	2	2
12	3	3	3	3	3	2	2
13	3	3	3	3	3	2	2
14	3	3	3	3	3	2	2
15	3	3	3	3	3	3	2
16	3	3	3	3	3	2	2
17	3	3	3	3	3	2	2
18	3	3	3	3	3	2	2
19	2	2	2	2	2	2	2
20	2	2	2	2	2	2	2
21	2	2	2	2	2	2	2
22	1	2	2	2	2	2	1
23	2	2	2	2	2	2	1

LANES REQUIRED TO BE OPEN BY HOUR AND TIME OF DAY

FALL SEASON SEPTEMBER 16 THRU November 30

HR/DAY	MON	TUES	WEDS	THUR	FRI	SAT	SUN
0	1	1	1	1	1	1	1
1	1	1	1	1	1	1	1
2	1	1	1	1	1	1	1
3	1	1	1	1	1	1	1
4	1	1	1	1	1	1	1
5	1	1	1	1	1	1	1
6	2	2	2	2	2	1	1
7	2	3	3	3	2	1	1
8	2	2	2	3	2	2	2
9	2	2	2	2	2	2	2
10	2	2	2	2	2	2	2
11	2	3	3	3	3	2	2
12	2	3	3	3	3	3	2
13	2	3	3	3	3	2	2
14	3	3	3	3	3	2	2
15	3	3	3	3	3	2	2
16	3	3	3	3	3	2	2
17	3	3	3	3	3	2	2
18	3	3	3	3	3	2	2
19	2	2	2	2	2	2	2
20	2	2	2	2	2	2	2
21	2	2	2	2	2	2	1
22	1	2	3	2	2	2	1
23	1	1	1	1	2	1	1

WINTER SEAS. DECEMBER 1 THRU February 28

HR/DAY	MON	TUES	WEDS	THUR	FRI	SAT	SUN
0	1	1	1	1	1	1	1
1	1	1	1	1	1	1	1
2	1	1	1	1	1	1	1
3	1	1	1	1	1	1	1
4	1	1	1	1	1	1	1
5	1	1	1	1	1	1	1
6	2	2	2	2	1	1	1
7	2	2	2	2	2	1	1
8	2	2	2	2	2	2	1
9	2	2	2	2	2	2	2
10	2	2	2	2	2	2	2
11	2	2	2	2	3	2	2
12	2	2	3	2	3	2	2
13	2	2	3	2	3	2	2
14	3	3	3	3	3	2	2
15	3	3	3	3	3	2	3
16	3	3	3	3	3	2	2
17	3	3	3	3	3	2	2
18	3	3	3	3	3	2	2
19	2	2	2	2	2	1	1
20	2	2	2	2	2	1	1
21	2	2	2	2	2	2	1
22	1	2	3	2	3	2	1
23	1	1	1	1	2	1	1

NOTES:

1) THE NEW YORK STATE THRUWAY IS A LIMITED ACCESS, HIGH-SPEED, HIGH-VOLUME HIGHWAY. TRAFFIC SHALL BE MAINTAINED IN ACCORDANCE WITH THE *MANUAL ON UNIFORM TRAFFIC CONTROL DEVICES (MUTCD)*, THE *WORK ZONE TRAFFIC CONTROL PLANS*, AND THE *STANDARD SPECIFICATIONS* SECTION 619 AS AMENDED BY THE AUTHORITY.

2) LANE CLOSURES ON THE THRUWAY SHALL ONLY BE ALLOWED IN ACCORDANCE WITH THESE TRAFFIC MANAGEMENT TABLE(S), UNLESS INDICATED OTHERWISE IN THE CONTRACT PLANS OR PROPOSAL DOCUMENTS.

3) LANE CLOSURE CHARTS SHALL APPLY AS FOLLOWS:

- 1,150 VEH/HR/LANE: APPLIES TO ALL WORK REQUIRING LANE CLOSURE(S) EXCEPT AS PERMITTED BELOW.

- 1,300 VEH/HR/LANE: APPLIES TO NON-EVASIVE WORK WHERE WORKERS AND/OR EQUIPMENT ARE LOCATED 4 FT. OR MORE FROM TRAVEL (SPACE) LANE, OR AS APPROVED BY THE THRUWAY PROJECT ENGINEER. WORK SHOULD BE ABLE TO BE IMMEDIATELY STOPPED AND LANE CLOSURE(S) REMOVED IN THE EVENT QUEUES, GREATER THAN 1 MILE, DEVELOP.

NEW YORK STATE OF OPPORTUNITY. Thruway Authority

U.S. CUSTOMARY STANDARD SHEET

LANE CLOSURE CHARTS
1,150 VEHICLES PER HOUR
BUFFALO DIVISION
(SHEET 22 OF 37)

APPROVED SEPTEMBER 1, 2018

/S/ PATRICK THOMPSON, P.E.
DIRECTOR DESIGN SUPPORT SERVICES BUREAU

ISSUED UNDER DB 18-003

TA 619-33

NIAGARA: I-190 NORTHBOUND INTERCHANGES N2 TO N3 (1,150 VEH/HR/LANE)

LANES REQUIRED TO BE OPEN BY HOUR AND TIME OF DAY

SPRING SEASON MARCH 1 THRU MAY 20

HR/DAY	MON	TUES	WEDS	THUR	FRI	SAT	SUN
0	1	1	1	1	1	1	1
1	1	1	1	1	1	1	1
2	1	1	1	1	1	1	1
3	1	1	1	1	1	1	1
4	1	1	1	1	1	1	1
5	1	1	1	1	1	1	1
6	3	3	3	3	3	1	1
7	3	3	3	3	3	1	1
8	3	3	3	3	3	2	1
9	3	3	3	3	3	2	1
10	2	2	2	2	2	2	2
11	2	2	2	2	2	2	2
12	2	2	2	2	2	2	2
13	2	2	2	2	2	2	2
14	2	2	2	2	2	3	2
15	2	2	3	2	3	2	2
16	2	2	3	2	3	2	2
17	2	3	3	2	3	2	2
18	2	3	2	2	3	3	2
19	2	2	2	2	2	2	2
20	1	1	1	1	2	2	2
21	1	1	1	1	1	1	1
22	1	1	1	1	1	1	1
23	1	1	1	1	1	1	1

SUMMER SEASON MAY 21 THRU SEPTEMBER 15

HR/DAY	MON	TUES	WEDS	THUR	FRI	SAT	SUN
0	1	1	1	1	1	1	1
1	1	1	1	1	1	1	1
2	1	1	1	1	1	1	1
3	1	1	1	1	1	1	1
4	1	1	1	1	1	1	1
5	2	1	1	1	1	1	1
6	3	3	3	3	3	1	1
7	3	3	3	3	3	1	1
8	3	3	3	3	3	2	1
9	3	3	3	3	3	2	1
10	2	2	2	2	2	2	2
11	2	2	2	2	2	2	2
12	2	2	2	2	2	2	2
13	2	2	2	2	2	2	2
14	2	2	2	2	3	2	2
15	3	2	2	3	3	2	2
16	2	3	3	3	3	2	2
17	3	3	3	3	3	2	2
18	2	2	2	3	3	2	2
19	2	2	2	2	2	2	2
20	2	2	2	2	2	2	2
21	1	1	1	2	2	2	1
22	1	1	1	2	2	1	1
23	1	1	1	1	1	1	1

LANES REQUIRED TO BE OPEN BY HOUR AND TIME OF DAY

FALL SEASON SEPTEMBER 16 THRU November 30

HR/DAY	MON	TUES	WEDS	THUR	FRI	SAT	SUN
0	1	1	1	1	1	1	1
1	1	1	1	1	1	1	1
2	1	1	1	1	1	1	1
3	1	1	1	1	1	1	1
4	1	1	1	1	1	1	1
5	1	1	1	2	1	1	1
6	3	3	3	3	3	1	1
7	3	3	3	3	3	1	1
8	3	3	3	3	3	2	1
9	3	3	3	3	3	2	1
10	2	2	2	2	2	2	2
11	2	2	2	2	2	2	2
12	2	2	2	2	2	2	2
13	2	2	2	2	2	2	2
14	3	3	3	2	3	2	2
15	2	3	3	3	3	2	2
16	2	3	3	3	3	2	2
17	2	3	3	3	3	2	2
18	2	3	3	3	3	3	2
19	2	2	2	2	2	2	2
20	1	1	2	1	2	2	2
21	1	1	1	1	2	1	1
22	1	1	1	1	1	1	1
23	1	1	1	1	1	1	1

WINTER SEAS. DECEMBER 1 THRU February 28

HR/DAY	MON	TUES	WEDS	THUR	FRI	SAT	SUN
0	1	1	1	1	1	1	1
1	1	1	1	1	1	1	1
2	1	1	1	1	1	1	1
3	1	1	1	1	1	1	1
4	1	1	1	1	1	1	1
5	1	1	1	1	1	1	1
6	3	3	3	3	3	1	1
7	3	3	3	3	3	1	1
8	3	3	3	3	3	1	1
9	3	3	3	3	3	2	1
10	2	2	2	2	2	2	1
11	2	2	2	2	2	2	2
12	2	2	2	2	2	2	2
13	2	2	2	2	2	2	2
14	2	2	2	2	2	2	2
15	2	2	2	2	2	2	2
16	2	2	2	2	2	2	2
17	2	3	2	3	3	2	2
18	2	3	2	3	3	3	2
19	2	2	2	2	2	2	2
20	1	1	1	1	1	1	1
21	1	1	1	1	1	1	1
22	1	1	1	1	1	1	1
23	1	1	1	1	1	1	1

NIAGARA: I-190 SOUTHBOUND INTERCHANGES N3 TO N2 (1,150 VEH/HR/LANE)

LANES REQUIRED TO BE OPEN BY HOUR AND TIME OF DAY

SPRING SEASON MARCH 1 THRU MAY 20

HR/DAY	MON	TUES	WEDS	THUR	FRI	SAT	SUN
0	1	1	1	1	1	1	1
1	1	1	1	1	1	1	1
2	1	1	1	1	1	1	1
3	1	1	1	1	1	1	1
4	1	1	1	1	1	1	1
5	1	1	1	1	1	1	1
6	1	1	1	1	1	1	1
7	2	2	2	2	2	1	1
8	2	2	2	2	2	2	1
9	2	2	2	2	2	2	1
10	2	2	2	2	2	2	2
11	2	2	2	2	2	2	2
12	2	2	2	2	3	2	2
13	2	2	2	2	3	2	2
14	3	3	3	3	3	2	2
15	3	3	3	3	3	2	2
16	3	3	3	3	3	2	2
17	3	3	3	3	3	2	2
18	3	3	3	3	3	2	2
19	2	2	2	2	2	2	2
20	1	2	2	2	2	1	2
21	2	2	2	2	2	2	1
22	2	2	2	2	2	3	2
23	1	1	1	1	2	2	1

SUMMER SEASON MAY 21 THRU SEPTEMBER 15

HR/DAY	MON	TUES	WEDS	THUR	FRI	SAT	SUN
0	1	1	1	1	1	1	1
1	1	1	1	1	1	1	1
2	1	1	1	1	1	1	1
3	1	1	1	1	1	1	1
4	1	1	1	1	1	1	1
5	1	1	1	1	1	1	1
6	2	1	1	2	2	1	1
7	2	2	2	2	2	1	1
8	2	2	2	2	2	2	1
9	2	2	2	2	2	2	2
10	2	2	2	2	2	2	2
11	2	2	2	3	3	2	2
12	3	2	3	3	3	2	2
13	3	3	3	3	3	2	2
14	3	3	3	3	3	2	2
15	3	3	3	3	3	2	2
16	3	3	3	3	3	2	2
17	3	3	3	3	3	2	2
18	3	3	3	3	3	2	2
19	2	2	2	2	2	2	2
20	2	2	2	2	2	2	2
21	2	2	2	2	2	2	2
22	1	2	2	2	2	2	1
23	2	2	2	2	2	2	1

LANES REQUIRED TO BE OPEN BY HOUR AND TIME OF DAY

FALL SEASON SEPTEMBER 16 THRU November 30

HR/DAY	MON	TUES	WEDS	THUR	FRI	SAT	SUN
0	1	1	1	1	1	1	1
1	1	1	1	1	1	1	1
2	1	1	1	1	1	1	1
3	1	1	1	1	1	1	1
4	1	1	1	1	1	1	1
5	1	1	1	1	1	1	1
6	1	2	1	2	2	1	1
7	2	2	2	2	2	1	1
8	2	2	2	2	2	2	1
9	2	2	2	2	2	2	2
10	2	2	2	2	2	2	2
11	2	2	2	2	3	2	2
12	2	3	2	2	3	2	2
13	2	3	2	3	3	2	2
14	3	3	3	3	3	2	2
15	3	3	3	3	3	2	2
16	3	3	3	3	3	2	2
17	3	3	3	3	3	2	2
18	3	3	3	3	3	2	2
19	2	2	2	2	2	2	2
20	2	2	2	2	2	1	2
21	2	2	2	2	2	2	1
22	2	2	2	2	2	2	1
23	1	1	1	1	2	2	1

WINTER SEAS. DECEMBER 1 THRU February 28

HR/DAY	MON	TUES	WEDS	THUR	FRI	SAT	SUN
0	1	1	1	1	1	1	1
1	1	1	1	1	1	1	1
2	1	1	1	1	1	1	1
3	1	1	1	1	1	1	1
4	1	1	1	1	1	1	1
5	1	1	1	1	1	1	1
6	1	1	1	1	1	1	1
7	2	2	2	2	2	1	1
8	2	2	2	2	2	1	1
9	2	2	2	2	2	2	1
10	2	2	2	2	2	2	2
11	2	2	2	2	2	2	2
12	2	2	2	2	3	2	2
13	2	2	3	2	3	2	2
14	3	3	3	3	3	2	2
15	3	3	3	3	3	2	3
16	3	3	3	3	3	2	2
17	3	3	3	3	3	2	2
18	3	3	3	3	3	2	2
19	2	2	2	2	2	1	1
20	2	2	2	2	2	1	2
21	2	2	2	2	2	2	1
22	2	2	2	2	3	2	1
23	1	1	1	1	2	1	1

NOTES:

1) THE NEW YORK STATE THRUWAY IS A LIMITED ACCESS, HIGH-SPEED, HIGH-VOLUME HIGHWAY. TRAFFIC SHALL BE MAINTAINED IN ACCORDANCE WITH THE *MANUAL ON UNIFORM TRAFFIC CONTROL DEVICES (MUTCD)*, THE *WORK ZONE TRAFFIC CONTROL PLANS*, AND THE *STANDARD SPECIFICATIONS* SECTION 619 AS AMENDED BY THE AUTHORITY.

2) LANE CLOSURES ON THE THRUWAY SHALL ONLY BE ALLOWED IN ACCORDANCE WITH THESE TRAFFIC MANAGEMENT TABLE(S), UNLESS INDICATED OTHERWISE IN THE CONTRACT PLANS OR PROPOSAL DOCUMENTS.

3) LANE CLOSURE CHARTS SHALL APPLY AS FOLLOWS:

- 1,150 VEH/HR/LANE: APPLIES TO ALL WORK REQUIRING LANE CLOSURE(S) EXCEPT AS PERMITTED BELOW.

- 1,300 VEH/HR/LANE: APPLIES TO NON-EVASIVE WORK WHERE WORKERS AND/OR EQUIPMENT ARE LOCATED 4 FT. OR MORE FROM TRAVEL (SPACE) LANE, OR AS APPROVED BY THE THRUWAY PROJECT ENGINEER. WORK SHOULD BE ABLE TO BE IMMEDIATELY STOPPED AND LANE CLOSURE(S) REMOVED IN THE EVENT QUEUES, GREATER THAN 1 MILE, DEVELOP.

NEW YORK STATE OF OPPORTUNITY. Thruway Authority

U.S. CUSTOMARY STANDARD SHEET

LANE CLOSURE CHARTS
1,150 VEHICLES PER HOUR
BUFFALO DIVISION
(SHEET 23 OF 37)

APPROVED SEPTEMBER 1, 2018

/S/ PATRICK THOMPSON, P.E.
DIRECTOR DESIGN SUPPORT SERVICES BUREAU

ISSUED UNDER DB 18-003

TA 619-33

NIAGARA: I-190 NORTHBOUND INTERCHANGES N3 TO N4 (1,150 VEH/HR/LANE)

LANES REQUIRED TO BE OPEN BY HOUR AND TIME OF DAY

SPRING SEASON MARCH 1 THRU MAY 20

HR/DAY	MON	TUES	WEDS	THUR	FRI	SAT	SUN
0	1	1	1	1	1	1	1
1	1	1	1	1	1	1	1
2	1	1	1	1	1	1	1
3	1	1	1	1	1	1	1
4	1	1	1	1	1	1	1
5	2	1	1	1	1	1	1
6	3	3	3	3	3	1	1
7	3	3	3	3	3	2	1
8	3	3	3	3	3	2	1
9	3	3	3	3	3	2	1
10	2	2	2	2	2	2	2
11	2	2	2	2	2	2	2
12	2	2	2	2	3	2	2
13	2	2	3	3	3	2	3
14	3	3	3	3	3	3	3
15	3	3	3	3	3	2	2
16	3	3	3	3	3	2	3
17	3	3	3	3	3	3	2
18	2	3	3	3	3	3	2
19	2	2	2	2	2	2	2
20	2	2	2	2	2	2	2
21	1	1	1	2	2	2	1
22	1	1	1	1	2	2	1
23	1	1	1	1	1	1	1

SUMMER SEASON MAY 21 THRU SEPTEMBER 15

HR/DAY	MON	TUES	WEDS	THUR	FRI	SAT	SUN
0	1	1	1	1	1	1	1
1	1	1	1	1	1	1	1
2	1	1	1	1	1	1	1
3	1	1	1	1	1	1	1
4	1	1	1	1	1	1	1
5	2	2	2	2	2	1	1
6	3	3	3	3	3	2	1
7	3	3	3	3	3	2	1
8	3	3	3	3	3	2	1
9	3	3	3	3	3	2	2
10	2	2	2	3	3	2	2
11	3	2	3	3	3	2	2
12	3	3	3	3	3	3	3
13	3	3	3	3	3	2	3
14	3	3	3	3	3	2	3
15	3	3	3	3	3	2	2
16	3	3	3	3	3	2	2
17	3	3	3	3	3	3	2
18	3	3	3	3	3	2	2
19	2	2	2	2	2	2	2
20	2	2	2	2	2	2	2
21	2	2	2	2	2	2	2
22	1	1	1	2	2	2	1
23	1	1	1	1	1	1	1

LANES REQUIRED TO BE OPEN BY HOUR AND TIME OF DAY

FALL SEASON SEPTEMBER 16 THRU November 30

HR/DAY	MON	TUES	WEDS	THUR	FRI	SAT	SUN
0	1	1	1	1	1	1	1
1	1	1	1	1	1	1	1
2	1	1	1	1	1	1	1
3	1	1	1	1	1	1	1
4	1	1	1	1	1	1	1
5	1	2	2	2	1	1	1
6	3	3	3	3	3	1	1
7	3	3	3	3	3	2	1
8	3	3	3	3	3	2	1
9	3	3	3	3	3	2	1
10	2	3	2	3	2	2	2
11	2	3	2	3	3	2	2
12	2	3	2	3	3	2	2
13	3	3	2	3	3	2	2
14	3	3	3	3	3	2	2
15	3	3	3	3	3	2	2
16	3	3	3	3	3	2	3
17	3	3	3	3	3	3	3
18	3	3	3	3	3	3	3
19	2	2	2	2	2	2	2
20	2	2	2	2	2	2	2
21	1	1	1	2	2	2	1
22	1	1	1	1	2	1	1
23	1	1	1	1	1	1	1

WINTER SEAS. DECEMBER 1 THRU February 28

HR/DAY	MON	TUES	WEDS	THUR	FRI	SAT	SUN
0	1	1	1	1	1	1	1
1	1	1	1	1	1	1	1
2	1	1	1	1	1	1	1
3	1	1	1	1	1	1	1
4	1	1	1	1	1	1	1
5	1	2	2	2	1	1	1
6	3	3	3	3	3	1	1
7	3	3	3	3	3	1	1
8	3	3	3	3	3	2	1
9	3	3	3	3	3	2	1
10	2	2	2	2	2	2	2
11	2	2	2	2	2	2	2
12	2	2	2	2	2	2	2
13	2	2	2	2	2	2	2
14	3	3	3	3	3	2	2
15	3	3	3	3	3	2	2
16	3	3	3	3	3	2	2
17	3	3	3	3	3	3	2
18	2	3	3	3	3	3	2
19	2	2	2	2	2	2	2
20	1	1	2	2	2	2	1
21	1	1	1	1	2	2	1
22	1	1	1	1	2	1	1
23	1	1	1	1	1	1	1

NIAGARA: I-190 SOUTHBOUND INTERCHANGES N4 TO N3 (1,150 VEH/HR/LANE)

LANES REQUIRED TO BE OPEN BY HOUR AND TIME OF DAY

SPRING SEASON MARCH 1 THRU MAY 20

HR/DAY	MON	TUES	WEDS	THUR	FRI	SAT	SUN
0	1	1	1	1	1	1	1
1	1	1	1	1	1	1	1
2	1	1	1	1	1	1	1
3	1	1	1	1	1	1	1
4	1	1	1	1	1	1	1
5	1	1	1	1	1	1	1
6	2	2	2	2	2	1	1
7	3	2	2	2	2	1	1
8	2	2	2	2	2	2	1
9	2	2	2	2	2	2	2
10	2	2	2	2	2	2	2
11	2	2	2	2	3	2	2
12	2	2	3	3	3	2	2
13	3	3	3	3	3	2	2
14	3	3	3	3	3	2	2
15	3	3	3	3	3	2	2
16	3	3	3	3	3	2	2
17	3	3	3	3	3	2	2
18	3	3	3	3	3	2	2
19	2	2	2	2	2	2	2
20	2	2	2	2	2	2	2
21	2	2	2	2	2	2	2
22	2	2	2	2	2	3	2
23	1	1	1	1	2	2	1

SUMMER SEASON MAY 21 THRU SEPTEMBER 15

HR/DAY	MON	TUES	WEDS	THUR	FRI	SAT	SUN
0	1	1	1	1	1	1	1
1	1	1	1	1	1	1	1
2	1	1	1	1	1	1	1
3	1	1	1	1	1	1	1
4	1	1	1	1	1	1	1
5	1	1	1	1	1	1	1
6	2	2	2	2	2	1	1
7	3	2	2	2	2	1	1
8	2	2	2	2	2	2	1
9	2	2	2	2	2	2	2
10	2	2	2	2	2	2	2
11	3	3	3	3	3	2	2
12	3	3	3	3	3	2	2
13	3	3	3	3	3	2	2
14	3	3	3	3	3	2	2
15	3	3	3	3	3	3	3
16	3	3	3	3	3	2	2
17	3	3	3	3	3	2	2
18	3	3	3	3	3	2	2
19	2	2	2	2	2	2	2
20	2	2	2	2	2	2	2
21	2	2	2	2	2	2	2
22	2	2	2	2	2	2	1
23	2	2	2	2	2	2	1

LANES REQUIRED TO BE OPEN BY HOUR AND TIME OF DAY

FALL SEASON SEPTEMBER 16 THRU November 30

HR/DAY	MON	TUES	WEDS	THUR	FRI	SAT	SUN
0	1	1	1	1	1	1	1
1	1	1	1	1	1	1	1
2	1	1	1	1	1	1	1
3	1	1	1	1	1	1	1
4	1	1	1	1	1	1	1
5	1	1	1	1	1	1	1
6	2	2	2	2	2	1	1
7	2	3	2	3	3	1	1
8	2	2	2	3	3	2	2
9	2	2	2	2	2	2	2
10	2	2	2	2	2	2	2
11	2	3	2	3	3	2	2
12	3	3	3	3	3	3	2
13	3	3	3	3	3	2	2
14	3	3	3	3	3	2	2
15	3	3	3	3	3	2	2
16	3	3	3	3	3	2	2
17	3	3	3	3	3	2	2
18	3	3	3	3	3	2	2
19	2	2	2	2	2	2	2
20	2	2	2	2	2	2	2
21	2	2	2	2	2	2	1
22	2	2	2	2	3	2	1
23	1	1	1	1	2	2	1

WINTER SEAS. DECEMBER 1 THRU February 28

HR/DAY	MON	TUES	WEDS	THUR	FRI	SAT	SUN
0	1	1	1	1	1	1	1
1	1	1	1	1	1	1	1
2	1	1	1	1	1	1	1
3	1	1	1	1	1	1	1
4	1	1	1	1	1	1	1
5	1	1	1	1	1	1	1
6	2	2	2	2	1	1	1
7	2	2	2	2	2	1	1
8	2	2	2	2	2	2	1
9	2	2	2	2	2	2	1
10	2	2	2	2	2	2	2
11	2	2	2	2	3	2	2
12	2	3	3	3	3	2	2
13	3	3	3	3	3	2	2
14	3	3	3	3	3	2	2
15	3	3	3	3	3	2	3
16	3	3	3	3	3	2	2
17	3	3	3	3	3	2	2
18	3	3	3	3	3	2	2
19	2	2	2	2	2	2	2
20	2	2	2	2	2	1	2
21	2	2	2	2	2	2	1
22	2	2	2	2	3	3	1
23	1	1	1	1	2	1	1

NOTES:

1) THE NEW YORK STATE THRUWAY IS A LIMITED ACCESS, HIGH-SPEED, HIGH-VOLUME HIGHWAY. TRAFFIC SHALL BE MAINTAINED IN ACCORDANCE WITH THE *MANUAL ON UNIFORM TRAFFIC CONTROL DEVICES (MUTCD)*, THE *WORK ZONE TRAFFIC CONTROL PLANS*, AND THE *STANDARD SPECIFICATIONS* SECTION 619 AS AMENDED BY THE AUTHORITY.

2) LANE CLOSURES ON THE THRUWAY SHALL ONLY BE ALLOWED IN ACCORDANCE WITH THESE TRAFFIC MANAGEMENT TABLE(S), UNLESS INDICATED OTHERWISE IN THE CONTRACT PLANS OR PROPOSAL DOCUMENTS.

3) LANE CLOSURE CHARTS SHALL APPLY AS FOLLOWS:

- 1,150 VEH/HR/LANE: APPLIES TO ALL WORK REQUIRING LANE CLOSURE(S) EXCEPT AS PERMITTED BELOW.

- 1,300 VEH/HR/LANE: APPLIES TO NON-EVASIVE WORK WHERE WORKERS AND/OR EQUIPMENT ARE LOCATED 4 FT. OR MORE FROM TRAVEL (SPACE) LANE, OR AS APPROVED BY THE THRUWAY PROJECT ENGINEER. WORK SHOULD BE ABLE TO BE IMMEDIATELY STOPPED AND LANE CLOSURE(S) REMOVED IN THE EVENT QUEUES, GREATER THAN 1 MILE, DEVELOP.

NEW YORK STATE OF OPPORTUNITY. Thruway Authority

U.S. CUSTOMARY STANDARD SHEET

LANE CLOSURE CHARTS
1,150 VEHICLES PER HOUR
BUFFALO DIVISION
(SHEET 24 OF 37)

APPROVED SEPTEMBER 1, 2018

/S/ PATRICK THOMPSON, P.E.
DIRECTOR DESIGN SUPPORT SERVICES BUREAU

ISSUED UNDER DB 18-003

TA 619-33

NIAGARA: I-190 NORTHBOUND INTERCHANGES N4 TO N5 (1,150 VEH/HR/LANE)

LANES REQUIRED TO BE OPEN BY HOUR AND TIME OF DAY

SPRING SEASON MARCH 1 THRU MAY 20

HR/DAY	MON	TUES	WEDS	THUR	FRI	SAT	SUN
0	1	1	1	1	1	1	1
1	1	1	1	1	1	1	1
2	1	1	1	1	1	1	1
3	1	1	1	1	1	1	1
4	1	1	1	1	1	1	1
5	2	1	1	1	1	1	1
6	3	3	3	3	3	1	1
7	3	3	3	3	3	2	1
8	3	3	3	3	3	2	1
9	3	3	3	3	3	2	1
10	2	2	2	2	2	2	2
11	2	2	2	2	2	2	2
12	2	2	2	2	3	2	3
13	3	2	3	3	3	2	3
14	3	3	3	3	3	3	3
15	3	3	3	3	3	2	2
16	3	3	3	3	3	2	3
17	3	3	3	3	3	3	2
18	2	3	3	3	3	3	2
19	2	2	2	2	2	2	2
20	2	2	2	2	2	2	2
21	1	1	2	2	2	2	1
22	1	1	1	1	2	2	1
23	1	1	1	1	1	1	1

SUMMER SEASON MAY 21 THRU SEPTEMBER 15

HR/DAY	MON	TUES	WEDS	THUR	FRI	SAT	SUN
0	1	1	1	1	1	1	1
1	1	1	1	1	1	1	1
2	1	1	1	1	1	1	1
3	1	1	1	1	1	1	1
4	1	1	1	1	1	1	1
5	2	2	2	2	2	1	1
6	3	3	3	3	3	2	1
7	3	3	3	3	3	2	1
8	3	3	3	3	3	2	1
9	3	3	3	3	3	2	2
10	2	2	2	3	3	2	2
11	3	3	3	3	3	2	2
12	3	3	3	3	3	3	3
13	3	3	3	3	3	3	3
14	3	3	3	3	3	3	3
15	3	3	3	3	3	2	2
16	3	3	3	3	3	2	2
17	3	3	3	3	3	3	2
18	3	3	3	3	3	2	2
19	2	2	2	2	2	2	2
20	2	2	2	2	2	2	2
21	2	2	2	2	2	2	2
22	1	1	2	2	2	2	1
23	1	1	1	1	1	1	1

LANES REQUIRED TO BE OPEN BY HOUR AND TIME OF DAY

FALL SEASON SEPTEMBER 16 THRU November 30

HR/DAY	MON	TUES	WEDS	THUR	FRI	SAT	SUN
0	1	1	1	1	1	1	1
1	1	1	1	1	1	1	1
2	1	1	1	1	1	1	1
3	1	1	1	1	1	1	1
4	1	1	1	1	1	1	1
5	1	2	2	2	2	1	1
6	3	3	3	3	3	1	1
7	3	3	3	3	3	2	1
8	3	3	3	3	3	2	1
9	3	3	3	3	3	2	1
10	2	3	3	3	3	2	2
11	2	3	3	3	3	2	2
12	2	3	3	3	3	2	2
13	3	3	3	3	3	2	2
14	3	3	3	3	3	2	2
15	3	3	3	3	3	2	2
16	3	3	3	3	3	2	3
17	3	3	3	3	3	3	3
18	3	3	3	3	3	3	3
19	2	2	2	2	2	2	2
20	2	2	2	2	2	2	2
21	1	1	1	2	2	2	1
22	1	1	1	1	2	1	1
23	1	1	1	1	1	1	1

WINTER SEAS. DECEMBER 1 THRU February 28

HR/DAY	MON	TUES	WEDS	THUR	FRI	SAT	SUN
0	1	1	1	1	1	1	1
1	1	1	1	1	1	1	1
2	1	1	1	1	1	1	1
3	1	1	1	1	1	1	1
4	1	1	1	1	1	1	1
5	1	2	2	1	1	1	1
6	3	3	3	3	3	1	1
7	3	3	3	3	3	1	1
8	3	3	3	3	3	2	1
9	3	3	3	3	3	2	1
10	2	3	2	2	2	2	2
11	2	2	2	2	2	2	2
12	2	3	2	2	2	2	2
13	2	3	2	2	2	2	2
14	3	3	3	3	3	2	2
15	3	3	3	3	3	2	2
16	3	3	3	3	3	2	2
17	3	3	3	3	3	3	2
18	2	3	3	3	3	3	2
19	2	2	2	2	2	2	2
20	2	2	2	2	2	2	1
21	1	1	1	1	2	2	1
22	1	1	1	1	2	1	1
23	1	1	1	1	1	1	1

NIAGARA: I-190 SOUTHBOUND INTERCHANGES N5 TO N4 (1,150 VEH/HR/LANE)

LANES REQUIRED TO BE OPEN BY HOUR AND TIME OF DAY

SPRING SEASON MARCH 1 THRU MAY 20

HR/DAY	MON	TUES	WEDS	THUR	FRI	SAT	SUN
0	1	1	1	1	1	1	1
1	1	1	1	1	1	1	1
2	1	1	1	1	1	1	1
3	1	1	1	1	1	1	1
4	1	1	1	1	1	1	1
5	1	1	1	1	1	1	1
6	2	2	2	2	2	1	1
7	3	3	3	3	3	2	1
8	3	3	3	3	3	2	1
9	2	2	2	2	2	2	2
10	2	2	2	2	2	2	2
11	2	2	3	3	3	2	2
12	3	3	3	3	3	3	2
13	3	3	3	3	3	2	2
14	3	3	3	3	3	2	2
15	3	3	3	3	3	3	3
16	3	3	3	3	3	2	3
17	3	3	3	3	3	2	2
18	3	3	3	3	3	2	2
19	2	2	2	2	2	2	2
20	2	2	2	2	2	2	2
21	2	2	2	2	2	2	2
22	2	2	2	2	2	3	2
23	1	1	1	1	2	2	1

SUMMER SEASON MAY 21 THRU SEPTEMBER 15

HR/DAY	MON	TUES	WEDS	THUR	FRI	SAT	SUN
0	1	1	1	1	1	1	1
1	1	1	1	1	1	1	1
2	1	1	1	1	1	1	1
3	1	1	1	1	1	1	1
4	1	1	1	1	1	1	1
5	1	1	1	1	1	1	1
6	2	2	2	2	2	1	1
7	3	3	3	3	3	2	1
8	3	2	3	3	3	2	1
9	2	2	2	2	2	2	2
10	2	2	2	2	3	2	2
11	3	3	3	3	3	2	2
12	3	3	3	3	3	3	2
13	3	3	3	3	3	3	2
14	3	3	3	3	3	3	3
15	3	3	3	3	3	3	3
16	3	3	3	3	3	3	3
17	3	3	3	3	3	2	2
18	3	3	3	3	3	2	2
19	2	2	2	2	2	2	2
20	2	2	2	2	2	2	2
21	2	2	2	2	2	2	2
22	2	2	2	2	2	2	1
23	2	2	2	2	2	2	1

LANES REQUIRED TO BE OPEN BY HOUR AND TIME OF DAY

FALL SEASON SEPTEMBER 16 THRU November 30

HR/DAY	MON	TUES	WEDS	THUR	FRI	SAT	SUN
0	1	1	1	1	1	1	1
1	1	1	1	1	1	1	1
2	1	1	1	1	1	1	1
3	1	1	1	1	1	1	1
4	1	1	1	1	1	1	1
5	1	1	1	1	1	1	1
6	2	2	2	2	2	1	1
7	3	3	3	3	3	2	1
8	3	3	3	3	3	2	2
9	2	2	2	2	2	2	2
10	2	2	2	2	3	2	2
11	3	3	3	3	3	3	2
12	3	3	3	3	3	3	2
13	3	3	3	3	3	3	2
14	3	3	3	3	3	3	2
15	3	3	3	3	3	3	2
16	3	3	3	3	3	2	2
17	3	3	3	3	3	2	2
18	3	3	3	3	3	2	2
19	2	2	2	2	2	2	2
20	2	2	2	2	2	2	2
21	2	2	2	2	2	2	1
22	2	2	2	2	3	2	1
23	1	1	1	1	2	2	1

WINTER SEAS. DECEMBER 1 THRU February 28

HR/DAY	MON	TUES	WEDS	THUR	FRI	SAT	SUN
0	1	1	1	1	1	1	1
1	1	1	1	1	1	1	1
2	1	1	1	1	1	1	1
3	1	1	1	1	1	1	1
4	1	1	1	1	1	1	1
5	1	1	1	1	1	1	1
6	2	2	2	2	2	1	1
7	3	3	3	3	3	1	1
8	3	3	3	3	3	2	1
9	2	2	2	2	2	2	2
10	2	2	2	2	2	2	2
11	2	2	3	3	3	2	2
12	3	3	3	3	3	2	2
13	3	3	3	3	3	2	2
14	3	3	3	3	3	2	2
15	3	3	3	3	3	2	3
16	3	3	3	3	3	2	2
17	3	3	3	3	3	2	2
18	3	3	3	3	3	2	2
19	2	2	2	2	2	2	2
20	2	2	2	2	2	1	2
21	2	2	2	2	2	2	1
22	2	2	2	2	3	3	1
23	1	1	1	1	2	1	1

NOTES:

1) THE NEW YORK STATE THRUWAY IS A LIMITED ACCESS, HIGH-SPEED, HIGH-VOLUME HIGHWAY. TRAFFIC SHALL BE MAINTAINED IN ACCORDANCE WITH THE *MANUAL ON UNIFORM TRAFFIC CONTROL DEVICES (MUTCD)*, THE *WORK ZONE TRAFFIC CONTROL PLANS*, AND THE *STANDARD SPECIFICATIONS* SECTION 619 AS AMENDED BY THE AUTHORITY.

2) LANE CLOSURES ON THE THRUWAY SHALL ONLY BE ALLOWED IN ACCORDANCE WITH THESE TRAFFIC MANAGEMENT TABLE(S), UNLESS INDICATED OTHERWISE IN THE CONTRACT PLANS OR PROPOSAL DOCUMENTS.

3) LANE CLOSURE CHARTS SHALL APPLY AS FOLLOWS:

- 1,150 VEH/HR/LANE: APPLIES TO ALL WORK REQUIRING LANE CLOSURE(S) EXCEPT AS PERMITTED BELOW.

- 1,300 VEH/HR/LANE: APPLIES TO NON-EVASIVE WORK WHERE WORKERS AND/OR EQUIPMENT ARE LOCATED 4 FT. OR MORE FROM TRAVEL (SPACE) LANE, OR AS APPROVED BY THE THRUWAY PROJECT ENGINEER. WORK SHOULD BE ABLE TO BE IMMEDIATELY STOPPED AND LANE CLOSURE(S) REMOVED IN THE EVENT QUEUES, GREATER THAN 1 MILE, DEVELOP.

NEW YORK STATE OF OPPORTUNITY. Thruway Authority

U.S. CUSTOMARY STANDARD SHEET

LANE CLOSURE CHARTS
1,150 VEHICLES PER HOUR
BUFFALO DIVISION
(SHEET 25 OF 37)

APPROVED SEPTEMBER 1, 2018

/S/ PATRICK THOMPSON, P.E.
DIRECTOR DESIGN SUPPORT SERVICES BUREAU

ISSUED UNDER DB 18-003

TA 619-33

NIAGARA: I-190 NORTHBOUND INTERCHANGES N5 TO N6 (1,150 VEH/HR/LANE)

LANES REQUIRED TO BE OPEN BY HOUR AND TIME OF DAY

SPRING SEASON MARCH 1 THRU MAY 20

HR/DAY	MON	TUES	WEDS	THUR	FRI	SAT	SUN
0	1	1	1	1	1	1	1
1	1	1	1	1	1	1	1
2	1	1	1	1	1	1	1
3	1	1	1	1	1	1	1
4	1	1	1	1	1	1	1
5	2	1	1	1	1	1	1
6	3	3	3	3	3	1	1
7	3	3	3	3	3	2	1
8	3	3	3	3	3	2	1
9	3	3	3	3	3	2	1
10	2	2	2	2	2	2	2
11	2	2	2	2	2	2	2
12	2	2	3	3	3	2	3
13	3	2	3	3	3	3	3
14	3	3	3	3	3	3	2
15	3	3	3	3	3	2	2
16	3	3	3	3	3	2	3
17	3	3	3	3	3	3	2
18	2	3	3	3	3	3	2
19	2	2	2	2	2	2	2
20	2	2	2	2	2	2	2
21	2	2	2	2	2	2	2
22	1	1	1	2	2	2	1
23	1	1	1	1	1	1	1

SUMMER SEASON MAY 21 THRU SEPTEMBER 15

HR/DAY	MON	TUES	WEDS	THUR	FRI	SAT	SUN
0	1	1	1	1	1	1	1
1	1	1	1	1	1	1	1
2	1	1	1	1	1	1	1
3	1	1	1	1	1	1	1
4	1	1	1	1	1	1	1
5	2	2	2	2	2	1	1
6	3	3	3	3	3	2	1
7	3	3	3	3	3	2	1
8	3	3	3	3	3	2	1
9	3	3	3	3	3	2	2
10	2	2	2	3	3	2	2
11	3	3	3	3	3	2	2
12	3	3	3	3	3	3	3
13	3	3	3	3	3	3	3
14	3	3	3	3	3	3	3
15	3	3	3	3	3	3	3
16	3	3	3	3	3	2	2
17	3	3	3	3	3	3	2
18	3	3	3	3	3	3	2
19	2	2	2	2	2	2	2
20	2	2	2	2	2	2	2
21	2	2	2	2	2	2	2
22	1	1	2	2	2	2	1
23	1	1	1	1	2	1	1

LANES REQUIRED TO BE OPEN BY HOUR AND TIME OF DAY

FALL SEASON SEPTEMBER 16 THRU November 30

HR/DAY	MON	TUES	WEDS	THUR	FRI	SAT	SUN
0	1	1	1	1	1	1	1
1	1	1	1	1	1	1	1
2	1	1	1	1	1	1	1
3	1	1	1	1	1	1	1
4	1	1	1	1	1	1	1
5	1	2	2	2	2	1	1
6	3	3	3	3	3	1	1
7	3	3	3	3	3	2	1
8	3	3	3	3	3	2	1
9	3	3	3	3	3	2	1
10	2	3	3	3	3	2	2
11	2	3	3	3	3	2	2
12	2	3	3	3	3	2	2
13	3	3	3	3	3	2	2
14	3	3	3	3	3	2	2
15	3	3	3	3	3	3	2
16	3	3	3	3	3	2	3
17	3	3	3	3	3	3	3
18	3	3	3	3	3	3	3
19	2	2	2	2	2	2	2
20	2	2	2	2	2	2	2
21	1	2	2	2	2	2	1
22	1	2	2	1	2	2	1
23	1	1	1	1	1	1	1

WINTER SEAS. DECEMBER 1 THRU February 28

HR/DAY	MON	TUES	WEDS	THUR	FRI	SAT	SUN
0	1	1	1	1	1	1	1
1	1	1	1	1	1	1	1
2	1	1	1	1	1	1	1
3	1	1	1	1	1	1	1
4	1	1	1	1	1	1	1
5	1	2	1	1	1	1	1
6	3	3	3	3	3	1	1
7	3	3	3	3	3	1	1
8	3	3	3	3	3	2	1
9	3	3	3	3	3	2	1
10	2	3	2	2	2	2	2
11	2	2	2	2	2	2	2
12	2	3	2	2	3	2	2
13	2	3	2	2	3	2	2
14	3	3	3	3	3	2	2
15	3	3	3	3	3	2	2
16	3	3	3	3	3	2	2
17	3	3	3	3	3	3	2
18	2	3	3	3	3	3	2
19	2	2	2	2	2	2	2
20	2	2	2	2	2	2	2
21	1	2	2	2	2	2	1
22	1	2	2	1	2	2	1
23	1	1	1	1	1	1	1

NIAGARA: I-190 SOUTHBOUND INTERCHANGES N6 TO N5 (1,150 VEH/HR/LANE)

LANES REQUIRED TO BE OPEN BY HOUR AND TIME OF DAY

SPRING SEASON MARCH 1 THRU MAY 20

HR/DAY	MON	TUES	WEDS	THUR	FRI	SAT	SUN
0	1	1	1	1	1	1	1
1	1	1	1	1	1	1	1
2	1	1	1	1	1	1	1
3	1	1	1	1	1	1	1
4	1	1	1	1	1	1	1
5	1	1	1	1	1	1	1
6	2	2	2	2	2	1	1
7	3	3	3	3	3	2	1
8	3	3	3	3	3	2	1
9	2	2	2	2	2	2	2
10	2	2	2	2	2	2	2
11	2	2	2	2	3	2	2
12	3	3	3	3	3	2	2
13	3	3	3	3	3	2	2
14	3	3	3	3	3	2	2
15	3	3	3	3	3	3	3
16	3	3	3	3	3	2	3
17	3	3	3	3	3	2	2
18	3	3	3	3	3	2	2
19	2	2	2	2	2	2	2
20	2	2	2	2	2	2	2
21	2	2	2	2	2	2	1
22	1	2	2	2	2	2	1
23	1	1	1	1	2	2	1

SUMMER SEASON MAY 21 THRU SEPTEMBER 15

HR/DAY	MON	TUES	WEDS	THUR	FRI	SAT	SUN
0	1	1	1	1	1	1	1
1	1	1	1	1	1	1	1
2	1	1	1	1	1	1	1
3	1	1	1	1	1	1	1
4	1	1	1	1	1	1	1
5	1	1	1	1	1	1	1
6	2	2	2	2	2	1	1
7	3	3	3	3	3	2	1
8	3	3	3	3	3	2	1
9	2	2	2	2	2	2	2
10	2	2	2	2	3	2	2
11	3	3	3	3	3	2	2
12	3	3	3	3	3	3	2
13	3	3	3	3	3	3	2
14	3	3	3	3	3	3	2
15	3	3	3	3	3	3	3
16	3	3	3	3	3	2	3
17	3	3	3	3	3	2	2
18	3	3	3	3	3	2	2
19	2	2	2	2	2	2	2
20	2	2	2	2	2	2	2
21	2	2	2	2	2	2	2
22	1	2	2	2	2	2	1
23	2	1	2	2	2	2	1

LANES REQUIRED TO BE OPEN BY HOUR AND TIME OF DAY

FALL SEASON SEPTEMBER 16 THRU November 30

HR/DAY	MON	TUES	WEDS	THUR	FRI	SAT	SUN
0	1	1	1	1	1	1	1
1	1	1	1	1	1	1	1
2	1	1	1	1	1	1	1
3	1	1	1	1	1	1	1
4	1	1	1	1	1	1	1
5	1	1	1	1	1	1	1
6	2	2	2	2	2	1	1
7	3	3	3	3	3	2	1
8	3	3	3	3	3	2	2
9	2	2	2	2	3	2	2
10	2	2	2	3	3	2	2
11	2	3	3	3	3	3	2
12	3	3	3	3	3	3	2
13	3	3	3	3	3	3	2
14	3	3	3	3	3	2	2
15	3	3	3	3	3	3	2
16	3	3	3	3	3	2	2
17	3	3	3	3	3	2	2
18	3	3	3	3	3	2	2
19	2	2	2	2	2	2	2
20	2	2	2	2	2	2	1
21	1	2	2	2	2	2	1
22	1	2	2	2	2	2	1
23	1	1	1	1	2	1	1

WINTER SEAS. DECEMBER 1 THRU February 28

HR/DAY	MON	TUES	WEDS	THUR	FRI	SAT	SUN
0	1	1	1	1	1	1	1
1	1	1	1	1	1	1	1
2	1	1	1	1	1	1	1
3	1	1	1	1	1	1	1
4	1	1	1	1	1	1	1
5	1	1	1	1	1	1	1
6	2	2	2	2	2	1	1
7	3	3	3	3	3	1	1
8	3	3	3	3	3	2	1
9	2	2	2	2	2	2	2
10	2	2	2	2	2	2	2
11	2	2	3	2	3	2	2
12	2	3	3	3	3	2	2
13	3	3	3	3	3	2	2
14	3	3	3	3	3	2	2
15	3	3	3	3	3	2	2
16	3	3	3	3	3	2	2
17	3	3	3	3	3	2	2
18	3	3	3	3	3	2	2
19	2	2	2	2	2	2	2
20	2	2	2	2	2	1	1
21	1	2	2	2	2	2	1
22	1	2	2	2	2	2	1
23	1	1	1	1	2	1	1

NOTES:

1) THE NEW YORK STATE THRUWAY IS A LIMITED ACCESS, HIGH-SPEED, HIGH-VOLUME HIGHWAY. TRAFFIC SHALL BE MAINTAINED IN ACCORDANCE WITH THE *MANUAL ON UNIFORM TRAFFIC CONTROL DEVICES (MUTCD)*, THE *WORK ZONE TRAFFIC CONTROL PLANS*, AND THE *STANDARD SPECIFICATIONS* SECTION 619 AS AMENDED BY THE AUTHORITY.

2) LANE CLOSURES ON THE THRUWAY SHALL ONLY BE ALLOWED IN ACCORDANCE WITH THESE TRAFFIC MANAGEMENT TABLE(S), UNLESS INDICATED OTHERWISE IN THE CONTRACT PLANS OR PROPOSAL DOCUMENTS.

3) LANE CLOSURE CHARTS SHALL APPLY AS FOLLOWS:

- 1,150 VEH/HR/LANE: APPLIES TO ALL WORK REQUIRING LANE CLOSURE(S) EXCEPT AS PERMITTED BELOW.

- 1,300 VEH/HR/LANE: APPLIES TO NON-EVASIVE WORK WHERE WORKERS AND/OR EQUIPMENT ARE LOCATED 4 FT. OR MORE FROM TRAVEL (SPACE) LANE, OR AS APPROVED BY THE THRUWAY PROJECT ENGINEER. WORK SHOULD BE ABLE TO BE IMMEDIATELY STOPPED AND LANE CLOSURE(S) REMOVED IN THE EVENT QUEUES, GREATER THAN 1 MILE, DEVELOP.

NEW YORK STATE OF OPPORTUNITY. Thruway Authority

U.S. CUSTOMARY STANDARD SHEET

LANE CLOSURE CHARTS
1,150 VEHICLES PER HOUR
BUFFALO DIVISION
(SHEET 26 OF 37)

APPROVED SEPTEMBER 1, 2018

/S/ PATRICK THOMPSON, P.E.
DIRECTOR DESIGN SUPPORT SERVICES BUREAU

ISSUED UNDER DB 18-003

TA 619-33

NIAGARA: I-190 NORTHBOUND INTERCHANGES N8 TO N9 (1,150 VEH/HR/LANE)

LANES REQUIRED TO BE OPEN BY HOUR AND TIME OF DAY

SPRING SEASON MARCH 1 THRU MAY 20

HR/DAY	MON	TUES	WEDS	THUR	FRI	SAT	SUN
0	1	1	1	1	1	1	1
1	1	1	1	1	1	1	1
2	1	1	1	1	1	1	1
3	1	1	1	1	1	1	1
4	1	1	1	1	1	1	1
5	1	1	1	1	1	1	1
6	3	3	3	3	3	1	1
7	3	3	3	3	3	1	1
8	3	3	3	3	3	2	1
9	2	2	2	2	2	2	2
10	2	2	2	2	2	2	2
11	2	2	2	2	3	2	2
12	3	3	3	3	3	3	3
13	3	2	3	3	3	3	3
14	3	3	3	3	3	3	3
15	3	3	3	3	3	3	3
16	3	3	3	3	3	3	3
17	3	3	3	3	3	3	2
18	3	3	3	3	3	3	2
19	2	2	2	2	2	2	2
20	2	2	2	2	2	2	2
21	2	2	2	2	2	2	2
22	2	2	2	2	2	3	2
23	1	1	1	1	2	2	1

SUMMER SEASON MAY 21 THRU SEPTEMBER 15

HR/DAY	MON	TUES	WEDS	THUR	FRI	SAT	SUN
0	1	1	1	1	1	1	1
1	1	1	1	1	1	1	1
2	1	1	1	1	1	1	1
3	1	1	1	1	1	1	1
4	1	1	1	1	1	1	1
5	1	1	1	1	1	1	1
6	3	3	3	3	3	1	1
7	3	3	3	3	3	2	1
8	3	3	3	3	3	2	1
9	2	2	2	2	2	2	2
10	2	2	2	2	3	2	2
11	3	3	3	3	3	3	2
12	3	3	3	3	3	3	3
13	3	3	3	3	3	3	3
14	3	3	3	3	3	3	3
15	3	3	3	3	3	3	3
16	3	3	3	3	3	3	3
17	3	3	3	3	3	3	3
18	3	3	3	3	3	3	3
19	2	2	2	2	2	2	2
20	2	2	2	2	2	2	2
21	2	2	2	2	2	2	2
22	2	2	2	2	2	2	2
23	2	1	2	2	2	2	1

LANES REQUIRED TO BE OPEN BY HOUR AND TIME OF DAY

FALL SEASON SEPTEMBER 16 THRU November 30

HR/DAY	MON	TUES	WEDS	THUR	FRI	SAT	SUN
0	1	1	1	1	1	1	1
1	1	1	1	1	1	1	1
2	1	1	1	1	1	1	1
3	1	1	1	1	1	1	1
4	1	1	1	1	1	1	1
5	1	1	1	1	1	1	1
6	3	3	3	3	3	1	1
7	3	3	3	3	3	2	1
8	3	3	3	3	3	2	1
9	2	3	3	3	3	2	1
10	2	2	3	3	3	2	2
11	2	3	3	3	3	3	2
12	3	3	3	3	3	3	2
13	3	3	3	3	3	3	2
14	3	3	3	3	3	3	2
15	3	3	3	3	3	3	3
16	3	3	3	3	3	3	3
17	3	3	3	3	3	3	3
18	3	3	3	3	3	2	3
19	2	2	2	2	2	2	2
20	2	2	2	2	2	2	2
21	2	2	2	2	2	3	2
22	2	2	2	2	3	2	1
23	1	1	2	1	2	2	1

WINTER SEAS. DECEMBER 1 THRU February 28

HR/DAY	MON	TUES	WEDS	THUR	FRI	SAT	SUN
0	1	1	1	1	1	1	1
1	1	1	1	1	1	1	1
2	1	1	1	1	1	1	1
3	1	1	1	1	1	1	1
4	1	1	1	1	1	1	1
5	1	1	1	1	1	1	1
6	3	3	3	3	3	1	1
7	3	3	3	3	3	1	1
8	3	3	3	3	3	1	1
9	2	3	2	2	2	2	1
10	2	2	2	2	2	2	2
11	2	2	2	2	2	2	2
12	2	3	3	3	3	2	2
13	2	3	3	3	3	2	2
14	3	3	3	3	3	2	2
15	3	3	3	3	3	3	3
16	3	3	3	3	3	3	3
17	3	3	3	3	3	2	3
18	3	3	3	3	3	2	2
19	2	2	2	2	2	2	2
20	2	2	2	2	2	2	2
21	2	2	2	2	2	2	2
22	2	2	2	2	3	3	1
23	1	1	1	1	2	1	1

NIAGARA: I-190 SOUTHBOUND INTERCHANGES N9 TO N8 (1,150 VEH/HR/LANE)

LANES REQUIRED TO BE OPEN BY HOUR AND TIME OF DAY

SPRING SEASON MARCH 1 THRU MAY 20

HR/DAY	MON	TUES	WEDS	THUR	FRI	SAT	SUN
0	1	1	1	1	1	1	1
1	1	1	1	1	1	1	1
2	1	1	1	1	1	1	1
3	1	1	1	1	1	1	1
4	1	1	1	1	1	1	1
5	1	1	1	1	1	1	1
6	3	3	3	3	3	1	1
7	3	3	3	3	3	2	1
8	3	3	3	3	3	2	1
9	3	3	3	3	3	2	2
10	2	2	2	2	3	2	2
11	2	2	2	3	3	3	2
12	3	3	3	3	3	3	2
13	3	3	3	3	3	3	3
14	3	3	3	3	3	3	3
15	3	3	3	3	3	3	3
16	3	3	3	3	3	3	3
17	3	3	3	3	3	3	2
18	3	3	3	3	3	3	2
19	2	2	2	2	2	2	2
20	2	2	2	2	2	2	2
21	1	2	2	2	2	2	1
22	1	1	1	1	2	2	1
23	1	1	1	1	2	1	1

SUMMER SEASON MAY 21 THRU SEPTEMBER 15

HR/DAY	MON	TUES	WEDS	THUR	FRI	SAT	SUN
0	1	1	1	1	1	1	1
1	1	1	1	1	1	1	1
2	1	1	1	1	1	1	1
3	1	1	1	1	1	1	1
4	1	1	1	1	1	1	1
5	1	1	1	1	1	1	1
6	3	3	3	3	3	1	1
7	3	3	3	3	3	2	1
8	3	3	3	3	3	2	2
9	3	3	3	3	3	2	2
10	3	2	3	3	3	2	2
11	3	3	3	3	3	3	3
12	3	3	3	3	3	3	3
13	3	3	3	3	3	3	3
14	3	3	3	3	3	3	3
15	3	3	3	3	3	3	3
16	3	3	3	3	3	3	3
17	3	3	3	3	3	3	3
18	3	3	3	3	3	3	2
19	2	2	2	2	2	2	2
20	2	2	2	2	2	2	2
21	2	2	2	2	2	2	2
22	1	2	2	2	2	2	1
23	1	2	2	2	2	2	1

LANES REQUIRED TO BE OPEN BY HOUR AND TIME OF DAY

FALL SEASON SEPTEMBER 16 THRU November 30

HR/DAY	MON	TUES	WEDS	THUR	FRI	SAT	SUN
0	1	1	1	1	1	1	1
1	1	1	1	1	1	1	1
2	1	1	1	1	1	1	1
3	1	1	1	1	1	1	1
4	1	1	1	1	1	1	1
5	1	1	1	1	1	1	1
6	3	3	3	3	3	1	1
7	3	3	3	3	3	2	1
8	3	3	3	3	3	2	2
9	3	3	3	3	3	2	3
10	2	3	2	3	3	2	3
11	2	3	2	3	3	3	3
12	3	3	3	3	3	3	3
13	3	3	3	3	3	3	2
14	3	3	3	3	3	3	2
15	3	3	3	3	3	3	2
16	3	3	3	3	3	3	2
17	3	3	3	3	3	3	2
18	3	3	3	3	3	3	2
19	2	2	2	2	2	2	2
20	2	2	2	2	2	2	2
21	1	2	2	2	2	2	1
22	1	1	1	1	2	1	1
23	1	1	1	1	1	1	1

WINTER SEAS. DECEMBER 1 THRU February 28

HR/DAY	MON	TUES	WEDS	THUR	FRI	SAT	SUN
0	1	1	1	1	1	1	1
1	1	1	1	1	1	1	1
2	1	1	1	1	1	1	1
3	1	1	1	1	1	1	1
4	1	1	1	1	1	1	1
5	1	1	1	1	1	1	1
6	3	3	3	3	2	1	1
7	3	3	3	3	3	1	1
8	3	3	3	3	3	2	1
9	3	3	3	3	3	2	2
10	2	2	2	2	2	2	2
11	2	2	2	2	3	2	3
12	2	3	3	3	3	2	2
13	3	3	3	3	3	2	2
14	3	3	3	3	3	2	2
15	3	3	3	3	3	3	2
16	3	3	3	3	3	2	2
17	3	3	3	3	3	3	2
18	3	3	3	3	3	3	2
19	2	2	2	2	2	2	2
20	2	2	2	2	2	1	1
21	1	2	2	2	2	1	1
22	1	1	1	1	2	1	1
23	1	1	1	1	1	1	1

NOTES:

1) THE NEW YORK STATE THRUWAY IS A LIMITED ACCESS, HIGH-SPEED, HIGH-VOLUME HIGHWAY. TRAFFIC SHALL BE MAINTAINED IN ACCORDANCE WITH THE *MANUAL ON UNIFORM TRAFFIC CONTROL DEVICES (MUTCD)*, THE *WORK ZONE TRAFFIC CONTROL PLANS*, AND THE *STANDARD SPECIFICATIONS* SECTION 619 AS AMENDED BY THE AUTHORITY.

2) LANE CLOSURES ON THE THRUWAY SHALL ONLY BE ALLOWED IN ACCORDANCE WITH THESE TRAFFIC MANAGEMENT TABLE(S), UNLESS INDICATED OTHERWISE IN THE CONTRACT PLANS OR PROPOSAL DOCUMENTS.

3) LANE CLOSURE CHARTS SHALL APPLY AS FOLLOWS:

- 1,150 VEH/HR/LANE: APPLIES TO ALL WORK REQUIRING LANE CLOSURE(S) EXCEPT AS PERMITTED BELOW.

- 1,300 VEH/HR/LANE: APPLIES TO NON-EVASIVE WORK WHERE WORKERS AND/OR EQUIPMENT ARE LOCATED 4 FT. OR MORE FROM TRAVEL (SPACE) LANE, OR AS APPROVED BY THE THRUWAY PROJECT ENGINEER. WORK SHOULD BE ABLE TO BE IMMEDIATELY STOPPED AND LANE CLOSURE(S) REMOVED IN THE EVENT QUEUES, GREATER THAN 1 MILE, DEVELOP.

NEW YORK STATE OF OPPORTUNITY. Thruway Authority

U.S. CUSTOMARY STANDARD SHEET

LANE CLOSURE CHARTS
1,150 VEHICLES PER HOUR
BUFFALO DIVISION
(SHEET 27 OF 37)

APPROVED SEPTEMBER 1, 2018

/S/ PATRICK THOMPSON, P.E.
DIRECTOR DESIGN SUPPORT SERVICES BUREAU

ISSUED UNDER DB 18-003

TA 619-33

NIAGARA: I-190 NORTHBOUND INTERCHANGES N9 TO N11 (1,150 VEH/HR/LANE)

LANES REQUIRED TO BE OPEN BY HOUR AND TIME OF DAY

SPRING SEASON MARCH 1 THRU MAY 20

HR/DAY	MON	TUES	WEDS	THUR	FRI	SAT	SUN
0	1	1	1	1	1	1	1
1	1	1	1	1	1	1	1
2	1	1	1	1	1	1	1
3	1	1	1	1	1	1	1
4	1	1	1	1	1	1	1
5	1	1	1	1	1	1	1
6	2	2	2	2	2	1	1
7	2	2	2	2	2	1	1
8	2	2	2	2	2	2	1
9	2	2	2	2	2	2	1
10	2	2	2	2	2	2	2
11	2	2	2	2	2	2	2
12	2	2	2	2	2	2	2
13	2	2	2	2	2	2	2
14	2	2	2	2	2	2	2
15	2	2	2	2	2	2	2
16	2	2	2	2	2	2	2
17	2	2	2	2	2	2	2
18	2	2	2	2	2	2	2
19	2	2	2	2	2	2	2
20	2	2	2	2	2	2	2
21	2	2	2	2	2	2	1
22	2	2	2	2	2	2	2
23	1	1	1	1	1	2	1

SUMMER SEASON MAY 21 THRU SEPTEMBER 15

HR/DAY	MON	TUES	WEDS	THUR	FRI	SAT	SUN
0	1	1	1	1	1	1	1
1	1	1	1	1	1	1	1
2	1	1	1	1	1	1	1
3	1	1	1	1	1	1	1
4	1	1	1	1	1	1	1
5	1	1	1	1	1	1	1
6	2	2	2	2	2	1	1
7	2	2	2	2	2	1	1
8	2	2	2	2	2	2	1
9	2	2	2	2	2	2	1
10	2	2	2	2	2	2	2
11	2	2	2	2	2	2	2
12	2	2	2	2	2	2	2
13	2	2	2	2	2	2	2
14	2	2	2	2	2	2	2
15	2	2	2	2	2	2	2
16	2	2	2	2	2	2	2
17	2	2	2	2	2	2	2
18	2	2	2	2	2	2	2
19	2	2	2	2	2	2	2
20	2	2	2	2	2	2	2
21	2	2	2	2	2	2	2
22	1	2	2	2	2	2	1
23	1	1	1	1	1	2	1

LANES REQUIRED TO BE OPEN BY HOUR AND TIME OF DAY

FALL SEASON SEPTEMBER 16 THRU November 30

HR/DAY	MON	TUES	WEDS	THUR	FRI	SAT	SUN
0	1	1	1	1	1	1	1
1	1	1	1	1	1	1	1
2	1	1	1	1	1	1	1
3	1	1	1	1	1	1	1
4	1	1	1	1	1	1	1
5	1	1	1	1	1	1	1
6	2	2	2	2	2	1	1
7	2	2	2	2	2	1	1
8	2	2	2	2	2	2	1
9	2	2	2	2	2	2	1
10	2	2	2	2	2	2	2
11	2	2	2	2	2	2	2
12	2	2	2	2	2	2	2
13	2	2	2	2	2	2	2
14	2	2	2	2	2	2	2
15	2	2	2	2	2	2	2
16	2	2	2	2	2	2	2
17	2	2	2	2	2	2	2
18	2	2	2	2	2	2	2
19	2	2	2	2	2	2	2
20	2	2	2	2	2	2	2
21	2	2	2	2	2	2	1
22	1	2	2	2	2	2	1
23	1	1	1	1	1	1	1

WINTER SEAS. DECEMBER 1 THRU February 28

HR/DAY	MON	TUES	WEDS	THUR	FRI	SAT	SUN
0	1	1	1	1	1	1	1
1	1	1	1	1	1	1	1
2	1	1	1	1	1	1	1
3	1	1	1	1	1	1	1
4	1	1	1	1	1	1	1
5	1	1	1	1	1	1	1
6	2	2	2	2	2	1	1
7	2	2	2	2	2	1	1
8	2	2	2	2	2	1	1
9	2	2	2	2	2	2	1
10	2	2	2	2	2	2	1
11	2	2	2	2	2	2	2
12	2	2	2	2	2	2	2
13	2	2	2	2	2	2	2
14	2	2	2	2	2	2	2
15	2	2	2	2	2	2	2
16	2	2	2	2	2	2	2
17	2	2	2	2	2	2	2
18	2	2	2	2	2	2	2
19	2	2	2	2	2	2	2
20	1	2	2	2	2	1	1
21	1	2	2	2	2	2	1
22	2	2	2	2	2	2	1
23	1	1	1	1	2	1	1

NIAGARA: I-190 SOUTHBOUND INTERCHANGES N11 TO N9 (1,150 VEH/HR/LANE)

LANES REQUIRED TO BE OPEN BY HOUR AND TIME OF DAY

SPRING SEASON MARCH 1 THRU MAY 20

HR/DAY	MON	TUES	WEDS	THUR	FRI	SAT	SUN
0	1	1	1	1	1	1	1
1	1	1	1	1	1	1	1
2	1	1	1	1	1	1	1
3	1	1	1	1	1	1	1
4	1	1	1	1	1	1	1
5	1	1	1	1	1	1	1
6	2	2	2	2	2	1	1
7	2	2	2	2	2	2	1
8	2	2	2	2	2	2	1
9	2	2	2	2	2	2	1
10	2	2	2	2	2	2	2
11	2	2	2	2	2	2	2
12	2	2	2	2	2	2	2
13	2	2	2	2	2	2	2
14	2	2	2	2	2	2	2
15	2	2	2	2	2	2	2
16	2	2	2	2	2	2	2
17	2	2	2	2	2	2	2
18	2	2	2	2	2	2	2
19	2	2	2	2	2	2	2
20	2	2	2	2	2	2	2
21	1	1	2	2	2	2	1
22	1	1	1	1	2	1	1
23	1	1	1	1	1	1	1

SUMMER SEASON MAY 21 THRU SEPTEMBER 15

HR/DAY	MON	TUES	WEDS	THUR	FRI	SAT	SUN
0	1	1	1	1	1	1	1
1	1	1	1	1	1	1	1
2	1	1	1	1	1	1	1
3	1	1	1	1	1	1	1
4	1	1	1	1	1	1	1
5	1	1	1	1	1	1	1
6	2	2	2	2	2	1	1
7	2	2	2	2	2	2	1
8	2	2	2	2	2	2	1
9	2	2	2	2	2	2	2
10	2	2	2	2	2	2	2
11	2	2	2	2	2	2	2
12	2	2	2	2	2	2	2
13	2	2	2	2	2	2	2
14	2	2	2	2	2	2	2
15	2	2	2	2	2	2	2
16	2	2	2	2	2	2	2
17	2	2	2	2	2	2	2
18	2	2	2	2	2	2	2
19	2	2	2	2	2	2	2
20	2	2	2	2	2	2	2
21	2	2	2	2	2	2	2
22	1	2	2	2	2	2	1
23	1	1	1	1	2	1	1

LANES REQUIRED TO BE OPEN BY HOUR AND TIME OF DAY

FALL SEASON SEPTEMBER 16 THRU November 30

HR/DAY	MON	TUES	WEDS	THUR	FRI	SAT	SUN
0	1	1	1	1	1	1	1
1	1	1	1	1	1	1	1
2	1	1	1	1	1	1	1
3	1	1	1	1	1	1	1
4	1	1	1	1	1	1	1
5	1	1	1	1	1	1	1
6	2	2	2	2	2	1	1
7	2	2	2	2	2	2	1
8	2	2	2	2	2	2	2
9	2	2	2	2	2	2	2
10	2	2	2	2	2	2	2
11	2	2	2	2	2	2	2
12	2	2	2	2	2	2	2
13	2	2	2	2	2	2	2
14	2	2	2	2	2	2	2
15	2	2	2	2	2	2	2
16	2	2	2	2	2	2	2
17	2	2	2	2	2	2	2
18	2	2	2	2	2	2	2
19	2	2	2	2	2	2	2
20	2	2	2	2	2	2	1
21	1	1	1	2	2	1	1
22	1	1	1	1	1	1	1
23	1	1	1	1	1	1	1

WINTER SEAS. DECEMBER 1 THRU February 28

HR/DAY	MON	TUES	WEDS	THUR	FRI	SAT	SUN
0	1	1	1	1	1	1	1
1	1	1	1	1	1	1	1
2	1	1	1	1	1	1	1
3	1	1	1	1	1	1	1
4	1	1	1	1	1	1	1
5	1	1	1	1	1	1	1
6	2	2	2	2	2	1	1
7	2	2	2	2	2	1	1
8	2	2	2	2	2	2	1
9	2	2	2	2	2	2	1
10	2	2	2	2	2	2	2
11	2	2	2	2	2	2	2
12	2	2	2	2	2	2	2
13	2	2	2	2	2	2	2
14	2	2	2	2	2	2	2
15	2	2	2	2	2	2	2
16	2	2	2	2	2	2	2
17	2	2	2	2	2	2	2
18	2	2	2	2	2	2	2
19	2	2	2	2	2	2	1
20	1	2	2	2	2	1	1
21	1	1	1	1	2	1	1
22	1	1	1	1	1	1	1
23	1	1	1	1	1	1	1

NOTES:

1) THE NEW YORK STATE THRUWAY IS A LIMITED ACCESS, HIGH-SPEED, HIGH-VOLUME HIGHWAY. TRAFFIC SHALL BE MAINTAINED IN ACCORDANCE WITH THE *MANUAL ON UNIFORM TRAFFIC CONTROL DEVICES (MUTCD)*, THE *WORK ZONE TRAFFIC CONTROL PLANS*, AND THE *STANDARD SPECIFICATIONS* SECTION 619 AS AMENDED BY THE AUTHORITY.

2) LANE CLOSURES ON THE THRUWAY SHALL ONLY BE ALLOWED IN ACCORDANCE WITH THESE TRAFFIC MANAGEMENT TABLE(S), UNLESS INDICATED OTHERWISE IN THE CONTRACT PLANS OR PROPOSAL DOCUMENTS.

3) LANE CLOSURE CHARTS SHALL APPLY AS FOLLOWS:

- 1,150 VEH/HR/LANE: APPLIES TO ALL WORK REQUIRING LANE CLOSURE(S) EXCEPT AS PERMITTED BELOW.

- 1,300 VEH/HR/LANE: APPLIES TO NON-EVASIVE WORK WHERE WORKERS AND/OR EQUIPMENT ARE LOCATED 4 FT. OR MORE FROM TRAVEL (SPACE) LANE, OR AS APPROVED BY THE THRUWAY PROJECT ENGINEER. WORK SHOULD BE ABLE TO BE IMMEDIATELY STOPPED AND LANE CLOSURE(S) REMOVED IN THE EVENT QUEUES, GREATER THAN 1 MILE, DEVELOP.

NEW YORK STATE OF OPPORTUNITY. Thruway Authority

U.S. CUSTOMARY STANDARD SHEET

LANE CLOSURE CHARTS
1,150 VEHICLES PER HOUR
BUFFALO DIVISION
(SHEET 28 OF 37)

APPROVED SEPTEMBER 1, 2018

/S/ PATRICK THOMPSON, P.E.
DIRECTOR DESIGN SUPPORT SERVICES BUREAU

ISSUED UNDER DB 18-003

TA 619-33

NIAGARA: I-190 NORTHBOUND INTERCHANGES N11 TO N12 (1,150 VEH/HR/LANE)

LANES REQUIRED TO BE OPEN BY HOUR AND TIME OF DAY

SPRING SEASON MARCH 1 THRU MAY 20

HR/DAY	MON	TUES	WEDS	THUR	FRI	SAT	SUN
0	1	1	1	1	1	1	1
1	1	1	1	1	1	1	1
2	1	1	1	1	1	1	1
3	1	1	1	1	1	1	1
4	1	1	1	1	1	1	1
5	1	1	1	1	1	1	1
6	2	2	2	2	2	1	1
7	2	2	2	2	2	1	1
8	2	2	2	2	2	1	1
9	2	2	2	2	2	2	1
10	2	2	2	2	2	2	2
11	2	2	2	2	2	2	2
12	2	2	2	2	2	2	2
13	2	2	2	2	2	2	2
14	2	2	2	2	2	2	2
15	2	2	2	2	2	2	2
16	2	2	2	2	2	2	2
17	2	2	2	2	2	2	2
18	2	2	2	2	2	2	2
19	2	2	2	2	2	2	2
20	2	2	2	2	2	2	2
21	2	2	2	2	2	2	1
22	2	2	2	2	2	2	2
23	1	1	1	1	2	2	1

SUMMER SEASON MAY 21 THRU SEPTEMBER 15

HR/DAY	MON	TUES	WEDS	THUR	FRI	SAT	SUN
0	1	1	1	1	1	1	1
1	1	1	1	1	1	1	1
2	1	1	1	1	1	1	1
3	1	1	1	1	1	1	1
4	1	1	1	1	1	1	1
5	1	1	1	1	1	1	1
6	2	2	2	2	2	1	1
7	2	2	2	2	2	1	1
8	2	2	2	2	2	1	1
9	2	2	2	2	2	2	1
10	2	2	2	2	2	2	2
11	2	2	2	2	2	2	2
12	2	2	2	2	2	2	2
13	2	2	2	2	2	2	2
14	2	2	2	2	2	2	2
15	2	2	2	2	2	2	2
16	2	2	2	2	2	2	2
17	2	2	2	2	2	2	2
18	2	2	2	2	2	2	2
19	2	2	2	2	2	2	2
20	2	2	2	2	2	2	2
21	2	2	2	2	2	2	2
22	1	2	2	2	2	2	1
23	1	1	1	1	2	2	1

LANES REQUIRED TO BE OPEN BY HOUR AND TIME OF DAY

FALL SEASON SEPTEMBER 16 THRU November 30

HR/DAY	MON	TUES	WEDS	THUR	FRI	SAT	SUN
0	1	1	1	1	1	1	1
1	1	1	1	1	1	1	1
2	1	1	1	1	1	1	1
3	1	1	1	1	1	1	1
4	1	1	1	1	1	1	1
5	1	1	1	1	1	1	1
6	2	2	2	2	2	1	1
7	2	2	2	2	2	1	1
8	2	2	2	2	2	1	1
9	2	2	2	2	2	2	1
10	2	2	2	2	2	2	2
11	2	2	2	2	2	2	2
12	2	2	2	2	2	2	2
13	2	2	2	2	2	2	2
14	2	2	2	2	2	2	2
15	2	2	2	2	2	2	2
16	2	2	2	2	2	2	2
17	2	2	2	2	2	2	2
18	2	2	2	2	2	2	2
19	2	2	2	2	2	2	2
20	2	2	2	2	2	2	2
21	1	2	2	2	2	2	1
22	1	2	2	2	2	2	1
23	1	1	1	1	1	1	1

WINTER SEAS. DECEMBER 1 THRU February 28

HR/DAY	MON	TUES	WEDS	THUR	FRI	SAT	SUN
0	1	1	1	1	1	1	1
1	1	1	1	1	1	1	1
2	1	1	1	1	1	1	1
3	1	1	1	1	1	1	1
4	1	1	1	1	1	1	1
5	1	1	1	1	1	1	1
6	2	2	2	2	2	1	1
7	2	2	2	2	2	1	1
8	2	2	2	2	2	1	1
9	2	2	2	2	2	1	1
10	2	2	2	2	2	2	1
11	2	2	2	2	2	2	2
12	2	2	2	2	2	2	2
13	2	2	2	2	2	2	2
14	2	2	2	2	2	2	2
15	2	2	2	2	2	2	2
16	2	2	2	2	2	2	2
17	2	2	2	2	2	2	2
18	2	2	2	2	2	2	2
19	2	2	2	2	2	2	2
20	2	2	2	2	2	1	1
21	1	2	2	2	2	2	1
22	2	2	2	2	2	2	1
23	1	1	1	1	2	1	1

NIAGARA: I-190 SOUTHBOUND INTERCHANGES N12 TO N11 (1,150 VEH/HR/LANE)

LANES REQUIRED TO BE OPEN BY HOUR AND TIME OF DAY

SPRING SEASON MARCH 1 THRU MAY 20

HR/DAY	MON	TUES	WEDS	THUR	FRI	SAT	SUN
0	1	1	1	1	1	1	1
1	1	1	1	1	1	1	1
2	1	1	1	1	1	1	1
3	1	1	1	1	1	1	1
4	1	1	1	1	1	1	1
5	1	1	1	1	1	1	1
6	2	2	2	2	2	1	1
7	2	2	2	2	2	1	1
8	2	2	2	2	2	1	1
9	2	2	2	2	2	2	1
10	2	2	2	2	2	2	2
11	2	2	2	2	2	2	2
12	2	2	2	2	2	2	2
13	2	2	2	2	2	2	2
14	2	2	2	2	2	2	2
15	2	2	2	2	2	2	2
16	2	2	2	2	2	2	2
17	2	2	2	2	2	2	2
18	2	2	2	2	2	2	2
19	2	2	2	2	2	2	2
20	2	2	2	2	2	2	2
21	2	2	2	2	2	2	1
22	2	2	2	2	2	2	2
23	1	1	1	1	2	2	1

SUMMER SEASON MAY 21 THRU SEPTEMBER 15

HR/DAY	MON	TUES	WEDS	THUR	FRI	SAT	SUN
0	1	1	1	1	1	1	1
1	1	1	1	1	1	1	1
2	1	1	1	1	1	1	1
3	1	1	1	1	1	1	1
4	1	1	1	1	1	1	1
5	1	1	1	1	1	1	1
6	2	2	2	2	2	1	1
7	2	2	2	2	2	1	1
8	2	2	2	2	2	1	1
9	2	2	2	2	2	2	1
10	2	2	2	2	2	2	2
11	2	2	2	2	2	2	2
12	2	2	2	2	2	2	2
13	2	2	2	2	2	2	2
14	2	2	2	2	2	2	2
15	2	2	2	2	2	2	2
16	2	2	2	2	2	2	2
17	2	2	2	2	2	2	2
18	2	2	2	2	2	2	2
19	2	2	2	2	2	2	2
20	2	2	2	2	2	2	2
21	2	2	2	2	2	2	2
22	1	2	2	2	2	2	1
23	1	1	1	1	2	2	1

LANES REQUIRED TO BE OPEN BY HOUR AND TIME OF DAY

FALL SEASON SEPTEMBER 16 THRU November 30

HR/DAY	MON	TUES	WEDS	THUR	FRI	SAT	SUN
0	1	1	1	1	1	1	1
1	1	1	1	1	1	1	1
2	1	1	1	1	1	1	1
3	1	1	1	1	1	1	1
4	1	1	1	1	1	1	1
5	1	1	1	1	1	1	1
6	2	2	2	2	2	1	1
7	2	2	2	2	2	1	1
8	2	2	2	2	2	1	1
9	2	2	2	2	2	2	1
10	2	2	2	2	2	2	2
11	2	2	2	2	2	2	2
12	2	2	2	2	2	2	2
13	2	2	2	2	2	2	2
14	2	2	2	2	2	2	2
15	2	2	2	2	2	2	2
16	2	2	2	2	2	2	2
17	2	2	2	2	2	2	2
18	2	2	2	2	2	2	2
19	2	2	2	2	2	2	2
20	2	2	2	2	2	2	2
21	1	2	2	2	2	2	1
22	1	2	2	2	2	2	1
23	1	1	1	1	1	1	1

WINTER SEAS. DECEMBER 1 THRU February 28

HR/DAY	MON	TUES	WEDS	THUR	FRI	SAT	SUN
0	1	1	1	1	1	1	1
1	1	1	1	1	1	1	1
2	1	1	1	1	1	1	1
3	1	1	1	1	1	1	1
4	1	1	1	1	1	1	1
5	1	1	1	1	1	1	1
6	2	2	2	2	2	1	1
7	2	2	2	2	2	1	1
8	2	2	2	2	2	1	1
9	2	2	2	2	2	1	1
10	2	2	2	2	2	2	1
11	2	2	2	2	2	2	2
12	2	2	2	2	2	2	2
13	2	2	2	2	2	2	2
14	2	2	2	2	2	2	2
15	2	2	2	2	2	2	2
16	2	2	2	2	2	2	2
17	2	2	2	2	2	2	2
18	2	2	2	2	2	2	2
19	2	2	2	2	2	2	2
20	2	2	2	2	2	1	1
21	1	2	2	2	2	2	1
22	2	2	2	2	2	2	1
23	1	1	1	1	2	1	1

NOTES:

1) THE NEW YORK STATE THRUWAY IS A LIMITED ACCESS, HIGH-SPEED, HIGH-VOLUME HIGHWAY. TRAFFIC SHALL BE MAINTAINED IN ACCORDANCE WITH THE *MANUAL ON UNIFORM TRAFFIC CONTROL DEVICES (MUTCD)*, THE *WORK ZONE TRAFFIC CONTROL PLANS*, AND THE *STANDARD SPECIFICATIONS* SECTION 619 AS AMENDED BY THE AUTHORITY.

2) LANE CLOSURES ON THE THRUWAY SHALL ONLY BE ALLOWED IN ACCORDANCE WITH THESE TRAFFIC MANAGEMENT TABLE(S), UNLESS INDICATED OTHERWISE IN THE CONTRACT PLANS OR PROPOSAL DOCUMENTS.

3) LANE CLOSURE CHARTS SHALL APPLY AS FOLLOWS:

- 1,150 VEH/HR/LANE: APPLIES TO ALL WORK REQUIRING LANE CLOSURE(S) EXCEPT AS PERMITTED BELOW.

- 1,300 VEH/HR/LANE: APPLIES TO NON-EVASIVE WORK WHERE WORKERS AND/OR EQUIPMENT ARE LOCATED 4 FT. OR MORE FROM TRAVEL (SPACE) LANE, OR AS APPROVED BY THE THRUWAY PROJECT ENGINEER. WORK SHOULD BE ABLE TO BE IMMEDIATELY STOPPED AND LANE CLOSURE(S) REMOVED IN THE EVENT QUEUES, GREATER THAN 1 MILE, DEVELOP.

NEW YORK STATE OF OPPORTUNITY. Thruway Authority

U.S. CUSTOMARY STANDARD SHEET

LANE CLOSURE CHARTS
1,150 VEHICLES PER HOUR
BUFFALO DIVISION
(SHEET 29 OF 37)

APPROVED SEPTEMBER 1, 2018

/S/ PATRICK THOMPSON, P.E.
DIRECTOR DESIGN SUPPORT SERVICES BUREAU

ISSUED UNDER DB 18-003

TA 619-33

NIAGARA: I-190 NORTHBOUND INTERCHANGES N12 TO N13 (1,150 VEH/HR/LANE)

LANES REQUIRED TO BE OPEN BY HOUR AND TIME OF DAY

SPRING SEASON MARCH 1 THRU MAY 20

HR/DAY	MON	TUES	WEDS	THUR	FRI	SAT	SUN
0	1	1	1	1	1	1	1
1	1	1	1	1	1	1	1
2	1	1	1	1	1	1	1
3	1	1	1	1	1	1	1
4	1	1	1	1	1	1	1
5	1	1	1	1	1	1	1
6	2	2	2	2	2	1	1
7	2	2	2	2	2	1	1
8	2	2	2	2	2	1	1
9	2	2	2	2	2	2	1
10	2	2	2	2	2	2	2
11	2	2	2	2	2	2	2
12	2	2	2	2	2	2	2
13	2	2	2	2	2	2	2
14	2	2	2	2	2	2	2
15	2	2	2	2	2	2	2
16	2	2	2	2	2	2	2
17	2	2	2	2	2	2	2
18	2	2	2	2	2	2	2
19	2	2	2	2	2	2	2
20	2	2	2	2	2	2	2
21	1	2	2	2	2	2	1
22	2	2	2	2	2	2	1
23	1	1	1	1	2	2	1

SUMMER SEASON MAY 21 THRU SEPTEMBER 15

HR/DAY	MON	TUES	WEDS	THUR	FRI	SAT	SUN
0	1	1	1	1	1	1	1
1	1	1	1	1	1	1	1
2	1	1	1	1	1	1	1
3	1	1	1	1	1	1	1
4	1	1	1	1	1	1	1
5	1	1	1	1	1	1	1
6	2	2	2	2	2	1	1
7	2	2	2	2	2	1	1
8	2	2	2	2	2	1	1
9	2	2	2	2	2	2	1
10	2	2	2	2	2	2	2
11	2	2	2	2	2	2	2
12	2	2	2	2	2	2	2
13	2	2	2	2	2	2	2
14	2	2	2	2	2	2	2
15	2	2	2	2	2	2	2
16	2	2	2	2	2	2	2
17	2	2	2	2	2	2	2
18	2	2	2	2	2	2	2
19	2	2	2	2	2	2	2
20	2	2	2	2	2	2	2
21	2	2	2	2	2	2	2
22	1	2	2	2	2	2	1
23	1	1	1	1	2	2	1

LANES REQUIRED TO BE OPEN BY HOUR AND TIME OF DAY

FALL SEASON SEPTEMBER 16 THRU November 30

HR/DAY	MON	TUES	WEDS	THUR	FRI	SAT	SUN
0	1	1	1	1	1	1	1
1	1	1	1	1	1	1	1
2	1	1	1	1	1	1	1
3	1	1	1	1	1	1	1
4	1	1	1	1	1	1	1
5	1	1	1	1	1	1	1
6	2	2	2	2	2	1	1
7	2	2	2	2	2	1	1
8	2	2	2	2	2	1	1
9	2	2	2	2	2	2	1
10	2	2	2	2	2	2	2
11	2	2	2	2	2	2	2
12	2	2	2	2	2	2	2
13	2	2	2	2	2	2	2
14	2	2	2	2	2	2	2
15	2	2	2	2	2	2	2
16	2	2	2	2	2	2	2
17	2	2	2	2	2	2	2
18	2	2	2	2	2	2	2
19	2	2	2	2	2	2	2
20	2	2	2	2	2	1	1
21	1	2	2	2	2	2	1
22	1	2	2	2	2	2	1
23	1	1	1	1	1	1	1

WINTER SEAS. DECEMBER 1 THRU February 28

HR/DAY	MON	TUES	WEDS	THUR	FRI	SAT	SUN
0	1	1	1	1	1	1	1
1	1	1	1	1	1	1	1
2	1	1	1	1	1	1	1
3	1	1	1	1	1	1	1
4	1	1	1	1	1	1	1
5	1	1	1	1	1	1	1
6	2	2	2	2	2	1	1
7	2	2	2	2	2	1	1
8	2	2	2	2	2	1	1
9	2	2	2	2	2	1	1
10	2	2	2	2	2	2	1
11	2	2	2	2	2	2	2
12	2	2	2	2	2	2	2
13	2	2	2	2	2	2	2
14	2	2	2	2	2	2	2
15	2	2	2	2	2	2	2
16	2	2	2	2	2	2	2
17	2	2	2	2	2	2	2
18	2	2	2	2	2	2	2
19	2	2	2	2	2	2	1
20	1	2	2	2	2	1	1
21	1	2	2	2	2	2	1
22	1	2	2	2	2	2	1
23	1	1	1	1	1	1	1

NIAGARA: I-190 SOUTHBOUND INTERCHANGES N13 TO N12 (1,150 VEH/HR/LANE)

LANES REQUIRED TO BE OPEN BY HOUR AND TIME OF DAY

SPRING SEASON MARCH 1 THRU MAY 20

HR/DAY	MON	TUES	WEDS	THUR	FRI	SAT	SUN
0	1	1	1	1	1	1	1
1	1	1	1	1	1	1	1
2	1	1	1	1	1	1	1
3	1	1	1	1	1	1	1
4	1	1	1	1	1	1	1
5	1	1	1	1	1	1	1
6	2	2	2	2	2	1	1
7	2	2	2	2	2	1	1
8	2	2	2	2	2	1	1
9	2	2	2	2	2	2	1
10	2	2	2	2	2	2	2
11	2	2	2	2	2	2	2
12	2	2	2	2	2	2	2
13	2	2	2	2	2	2	2
14	2	2	2	2	2	2	2
15	2	2	2	2	2	2	2
16	2	2	2	2	2	2	2
17	2	2	2	2	2	2	2
18	2	2	2	2	2	2	2
19	2	2	2	2	2	2	2
20	2	2	2	2	2	2	2
21	1	2	2	2	2	2	1
22	2	2	2	2	2	2	1
23	1	1	1	1	2	2	1

SUMMER SEASON MAY 21 THRU SEPTEMBER 15

HR/DAY	MON	TUES	WEDS	THUR	FRI	SAT	SUN
0	1	1	1	1	1	1	1
1	1	1	1	1	1	1	1
2	1	1	1	1	1	1	1
3	1	1	1	1	1	1	1
4	1	1	1	1	1	1	1
5	1	1	1	1	1	1	1
6	2	2	2	2	2	1	1
7	2	2	2	2	2	1	1
8	2	2	2	2	2	1	1
9	2	2	2	2	2	2	1
10	2	2	2	2	2	2	2
11	2	2	2	2	2	2	2
12	2	2	2	2	2	2	2
13	2	2	2	2	2	2	2
14	2	2	2	2	2	2	2
15	2	2	2	2	2	2	2
16	2	2	2	2	2	2	2
17	2	2	2	2	2	2	2
18	2	2	2	2	2	2	2
19	2	2	2	2	2	2	2
20	2	2	2	2	2	2	2
21	2	2	2	2	2	2	2
22	1	2	2	2	2	2	1
23	1	1	1	1	2	2	1

LANES REQUIRED TO BE OPEN BY HOUR AND TIME OF DAY

FALL SEASON SEPTEMBER 16 THRU November 30

HR/DAY	MON	TUES	WEDS	THUR	FRI	SAT	SUN
0	1	1	1	1	1	1	1
1	1	1	1	1	1	1	1
2	1	1	1	1	1	1	1
3	1	1	1	1	1	1	1
4	1	1	1	1	1	1	1
5	1	1	1	1	1	1	1
6	2	2	2	2	2	1	1
7	2	2	2	2	2	1	1
8	2	2	2	2	2	1	1
9	2	2	2	2	2	2	1
10	2	2	2	2	2	2	2
11	2	2	2	2	2	2	2
12	2	2	2	2	2	2	2
13	2	2	2	2	2	2	2
14	2	2	2	2	2	2	2
15	2	2	2	2	2	2	2
16	2	2	2	2	2	2	2
17	2	2	2	2	2	2	2
18	2	2	2	2	2	2	2
19	2	2	2	2	2	2	2
20	2	2	2	2	2	1	1
21	1	2	2	2	2	2	1
22	1	2	2	2	2	2	1
23	1	1	1	1	1	1	1

WINTER SEAS. DECEMBER 1 THRU February 28

HR/DAY	MON	TUES	WEDS	THUR	FRI	SAT	SUN
0	1	1	1	1	1	1	1
1	1	1	1	1	1	1	1
2	1	1	1	1	1	1	1
3	1	1	1	1	1	1	1
4	1	1	1	1	1	1	1
5	1	1	1	1	1	1	1
6	2	2	2	2	2	1	1
7	2	2	2	2	2	1	1
8	2	2	2	2	2	1	1
9	2	2	2	2	2	1	1
10	2	2	2	2	2	2	1
11	2	2	2	2	2	2	2
12	2	2	2	2	2	2	2
13	2	2	2	2	2	2	2
14	2	2	2	2	2	2	2
15	2	2	2	2	2	2	2
16	2	2	2	2	2	2	2
17	2	2	2	2	2	2	2
18	2	2	2	2	2	2	2
19	2	2	2	2	2	2	1
20	1	2	2	2	2	1	1
21	1	2	2	2	2	2	1
22	1	2	2	2	2	2	1
23	1	1	1	1	1	1	1

NOTES:

1) THE NEW YORK STATE THRUWAY IS A LIMITED ACCESS, HIGH-SPEED, HIGH-VOLUME HIGHWAY. TRAFFIC SHALL BE MAINTAINED IN ACCORDANCE WITH THE *MANUAL ON UNIFORM TRAFFIC CONTROL DEVICES (MUTCD)*, THE *WORK ZONE TRAFFIC CONTROL PLANS*, AND THE *STANDARD SPECIFICATIONS* SECTION 619 AS AMENDED BY THE AUTHORITY.

2) LANE CLOSURES ON THE THRUWAY SHALL ONLY BE ALLOWED IN ACCORDANCE WITH THESE TRAFFIC MANAGEMENT TABLE(S), UNLESS INDICATED OTHERWISE IN THE CONTRACT PLANS OR PROPOSAL DOCUMENTS.

3) LANE CLOSURE CHARTS SHALL APPLY AS FOLLOWS:

- 1,150 VEH/HR/LANE: APPLIES TO ALL WORK REQUIRING LANE CLOSURE(S) EXCEPT AS PERMITTED BELOW.

- 1,300 VEH/HR/LANE: APPLIES TO NON-EVASIVE WORK WHERE WORKERS AND/OR EQUIPMENT ARE LOCATED 4 FT. OR MORE FROM TRAVEL (SPACE) LANE, OR AS APPROVED BY THE THRUWAY PROJECT ENGINEER. WORK SHOULD BE ABLE TO BE IMMEDIATELY STOPPED AND LANE CLOSURE(S) REMOVED IN THE EVENT QUEUES, GREATER THAN 1 MILE, DEVELOP.

NEW YORK STATE OF OPPORTUNITY. Thruway Authority

U.S. CUSTOMARY STANDARD SHEET

LANE CLOSURE CHARTS
1,150 VEHICLES PER HOUR
BUFFALO DIVISION
(SHEET 30 OF 37)

APPROVED SEPTEMBER 1, 2018

/S/ PATRICK THOMPSON, P.E.
DIRECTOR DESIGN SUPPORT SERVICES BUREAU

ISSUED UNDER DB 18-003

TA 619-33

NIAGARA: I-190 NORTHBOUND INTERCHANGES N14 TO N15 (1,150 VEH/HR/LANE)

LANES REQUIRED TO BE OPEN BY HOUR AND TIME OF DAY

SPRING SEASON MARCH 1 THRU MAY 20

HR/DAY	MON	TUES	WEDS	THUR	FRI	SAT	SUN
0	1	1	1	1	1	1	1
1	1	1	1	1	1	1	1
2	1	1	1	1	1	1	1
3	1	1	1	1	1	1	1
4	1	1	1	1	1	1	1
5	1	1	1	1	1	1	1
6	2	2	2	2	2	1	1
7	2	2	2	2	2	1	1
8	2	2	2	2	2	1	1
9	2	2	2	2	2	2	1
10	2	2	2	2	2	2	2
11	2	2	2	2	2	2	2
12	2	2	2	2	2	2	2
13	2	2	2	2	2	2	2
14	2	2	2	2	2	2	2
15	2	2	2	2	2	2	2
16	2	2	2	2	2	2	2
17	2	2	2	2	2	2	2
18	2	2	2	2	2	2	2
19	2	2	2	2	2	2	2
20	2	2	2	2	2	2	2
21	1	2	2	2	2	2	1
22	1	2	2	2	2	2	1
23	1	1	1	1	1	2	1

SUMMER SEASON MAY 21 THRU SEPTEMBER 15

HR/DAY	MON	TUES	WEDS	THUR	FRI	SAT	SUN
0	1	1	1	1	1	1	1
1	1	1	1	1	1	1	1
2	1	1	1	1	1	1	1
3	1	1	1	1	1	1	1
4	1	1	1	1	1	1	1
5	1	1	1	1	1	1	1
6	2	2	2	2	2	1	1
7	2	2	2	2	2	1	1
8	2	2	2	2	2	1	1
9	2	2	2	2	2	2	1
10	2	2	2	2	2	2	2
11	2	2	2	2	2	2	2
12	2	2	2	2	2	2	2
13	2	2	2	2	2	2	2
14	2	2	2	2	2	2	2
15	2	2	2	2	2	2	2
16	2	2	2	2	2	2	2
17	2	2	2	2	2	2	2
18	2	2	2	2	2	2	2
19	2	2	2	2	2	2	2
20	2	2	2	2	2	2	2
21	2	2	2	2	2	2	2
22	1	2	2	2	2	2	1
23	1	1	1	1	1	2	2	1

LANES REQUIRED TO BE OPEN BY HOUR AND TIME OF DAY

FALL SEASON SEPTEMBER 16 THRU November 30

HR/DAY	MON	TUES	WEDS	THUR	FRI	SAT	SUN
0	1	1	1	1	1	1	1
1	1	1	1	1	1	1	1
2	1	1	1	1	1	1	1
3	1	1	1	1	1	1	1
4	1	1	1	1	1	1	1
5	1	1	1	1	1	1	1
6	2	2	2	2	2	1	1
7	2	2	2	2	2	1	1
8	2	2	2	2	2	1	1
9	2	2	2	2	2	2	1
10	2	2	2	2	2	2	2
11	2	2	2	2	2	2	2
12	2	2	2	2	2	2	2
13	2	2	2	2	2	2	2
14	2	2	2	2	2	2	2
15	2	2	2	2	2	2	2
16	2	2	2	2	2	2	2
17	2	2	2	2	2	2	2
18	2	2	2	2	2	2	2
19	2	2	2	2	2	2	2
20	2	2	2	2	2	2	2
21	1	2	2	2	2	2	1
22	1	2	2	2	2	2	1
23	1	1	1	1	1	1	1

WINTER SEAS. DECEMBER 1 THRU February 28

HR/DAY	MON	TUES	WEDS	THUR	FRI	SAT	SUN
0	1	1	1	1	1	1	1
1	1	1	1	1	1	1	1
2	1	1	1	1	1	1	1
3	1	1	1	1	1	1	1
4	1	1	1	1	1	1	1
5	1	1	1	1	1	1	1
6	2	2	2	2	2	1	1
7	2	2	2	2	2	1	1
8	2	2	2	2	2	1	1
9	2	2	2	2	2	1	1
10	2	2	2	2	2	2	1
11	2	2	2	2	2	2	2
12	2	2	2	2	2	2	2
13	2	2	2	2	2	2	2
14	2	2	2	2	2	2	2
15	2	2	2	2	2	2	2
16	2	2	2	2	2	2	2
17	2	2	2	2	2	2	2
18	2	2	2	2	2	2	2
19	2	2	2	2	2	2	1
20	1	2	2	2	2	1	1
21	1	2	2	2	2	2	1
22	2	2	2	2	2	2	1
23	1	1	1	1	1	1	1

NIAGARA: I-190 SOUTHBOUND INTERCHANGES N15 TO N14 (1,150 VEH/HR/LANE)

LANES REQUIRED TO BE OPEN BY HOUR AND TIME OF DAY

SPRING SEASON MARCH 1 THRU MAY 20

HR/DAY	MON	TUES	WEDS	THUR	FRI	SAT	SUN
0	1	1	1	1	1	1	1
1	1	1	1	1	1	1	1
2	1	1	1	1	1	1	1
3	1	1	1	1	1	1	1
4	1	1	1	1	1	1	1
5	1	1	1	1	1	1	1
6	2	2	2	2	2	1	1
7	2	2	2	2	2	1	1
8	2	2	2	2	2	2	1
9	2	2	2	2	2	2	1
10	2	2	2	2	2	2	2
11	2	2	2	2	2	2	2
12	2	2	2	2	2	2	2
13	2	2	2	2	2	2	2
14	2	2	2	2	2	2	2
15	2	2	2	2	2	2	2
16	2	2	2	2	2	2	2
17	2	2	2	2	2	2	2
18	2	2	2	2	2	2	2
19	2	2	2	2	2	2	2
20	1	1	2	1	2	2	2
21	1	1	1	1	2	1	1
22	1	1	1	1	1	1	1
23	1	1	1	1	1	1	1

SUMMER SEASON MAY 21 THRU SEPTEMBER 15

HR/DAY	MON	TUES	WEDS	THUR	FRI	SAT	SUN
0	1	1	1	1	1	1	1
1	1	1	1	1	1	1	1
2	1	1	1	1	1	1	1
3	1	1	1	1	1	1	1
4	1	1	1	1	1	1	1
5	1	1	1	1	1	1	1
6	2	2	2	2	2	1	1
7	2	2	2	2	2	1	1
8	2	2	2	2	2	2	1
9	2	2	2	2	2	2	2
10	2	2	2	2	2	2	2
11	2	2	2	2	2	2	2
12	2	2	2	2	2	2	2
13	2	2	2	2	2	2	2
14	2	2	2	2	2	2	2
15	2	2	2	2	2	2	2
16	2	2	2	2	2	2	2
17	2	2	2	2	2	2	2
18	2	2	2	2	2	2	2
19	2	2	2	2	2	2	2
20	2	2	2	2	2	2	2
21	1	2	2	2	2	2	1
22	1	2	2	1	2	2	1
23	1	1	1	1	2	1	1

LANES REQUIRED TO BE OPEN BY HOUR AND TIME OF DAY

FALL SEASON SEPTEMBER 16 THRU November 30

HR/DAY	MON	TUES	WEDS	THUR	FRI	SAT	SUN
0	1	1	1	1	1	1	1
1	1	1	1	1	1	1	1
2	1	1	1	1	1	1	1
3	1	1	1	1	1	1	1
4	1	1	1	1	1	1	1
5	1	1	1	1	1	1	1
6	2	2	2	2	2	1	1
7	2	2	2	2	2	1	1
8	2	2	2	2	2	2	1
9	2	2	2	2	2	2	2
10	2	2	2	2	2	2	2
11	2	2	2	2	2	2	2
12	2	2	2	2	2	2	2
13	2	2	2	2	2	2	2
14	2	2	2	2	2	2	2
15	2	2	2	2	2	2	2
16	2	2	2	2	2	2	2
17	2	2	2	2	2	2	2
18	2	2	2	2	2	2	2
19	2	2	2	2	2	2	2
20	1	1	1	1	2	2	1
21	1	1	1	1	1	1	1
22	1	1	1	1	1	1	1
23	1	1	1	1	1	1	1

WINTER SEAS. DECEMBER 1 THRU February 28

HR/DAY	MON	TUES	WEDS	THUR	FRI	SAT	SUN
0	1	1	1	1	1	1	1
1	1	1	1	1	1	1	1
2	1	1	1	1	1	1	1
3	1	1	1	1	1	1	1
4	1	1	1	1	1	1	1
5	1	1	1	1	1	1	1
6	2	2	2	2	2	1	1
7	2	2	2	2	2	1	1
8	2	2	2	2	2	1	1
9	2	2	2	2	2	1	1
10	2	2	2	2	2	2	2
11	2	2	2	2	2	2	2
12	2	2	2	2	2	2	2
13	2	2	2	2	2	2	2
14	2	2	2	2	2	2	2
15	2	2	2	2	2	2	2
16	2	2	2	2	2	2	2
17	2	2	2	2	2	2	2
18	2	2	2	2	2	2	2
19	2	2	2	2	2	2	1
20	1	1	1	1	1	1	1
21	1	1	1	1	1	1	1
22	1	1	1	1	1	1	1
23	1	1	1	1	1	1	1

NOTES:

1) THE NEW YORK STATE THRUWAY IS A LIMITED ACCESS, HIGH-SPEED, HIGH-VOLUME HIGHWAY. TRAFFIC SHALL BE MAINTAINED IN ACCORDANCE WITH THE *MANUAL ON UNIFORM TRAFFIC CONTROL DEVICES (MUTCD)*, THE *WORK ZONE TRAFFIC CONTROL PLANS*, AND THE *STANDARD SPECIFICATIONS* SECTION 619 AS AMENDED BY THE AUTHORITY.

2) LANE CLOSURES ON THE THRUWAY SHALL ONLY BE ALLOWED IN ACCORDANCE WITH THESE TRAFFIC MANAGEMENT TABLE(S), UNLESS INDICATED OTHERWISE IN THE CONTRACT PLANS OR PROPOSAL DOCUMENTS.

3) LANE CLOSURE CHARTS SHALL APPLY AS FOLLOWS:

- 1,150 VEH/HR/LANE: APPLIES TO ALL WORK REQUIRING LANE CLOSURE(S) EXCEPT AS PERMITTED BELOW.

- 1,300 VEH/HR/LANE: APPLIES TO NON-EVASIVE WORK WHERE WORKERS AND/OR EQUIPMENT ARE LOCATED 4 FT. OR MORE FROM TRAVEL (SPACE) LANE, OR AS APPROVED BY THE THRUWAY PROJECT ENGINEER. WORK SHOULD BE ABLE TO BE IMMEDIATELY STOPPED AND LANE CLOSURE(S) REMOVED IN THE EVENT QUEUES, GREATER THAN 1 MILE, DEVELOP.

NEW YORK STATE OF OPPORTUNITY. Thruway Authority

U.S. CUSTOMARY STANDARD SHEET

LANE CLOSURE CHARTS
1,150 VEHICLES PER HOUR
BUFFALO DIVISION
(SHEET 31 OF 37)

APPROVED SEPTEMBER 1, 2018

/S/ PATRICK THOMPSON, P.E.
DIRECTOR DESIGN SUPPORT SERVICES BUREAU

ISSUED UNDER DB 18-003

TA 619-33

NIAGARA: I-190 NORTHBOUND INTERCHANGES N15 TO N16 (1,150 VEH/HR/LANE)

LANES REQUIRED TO BE OPEN BY HOUR AND TIME OF DAY

SPRING SEASON MARCH 1 THRU MAY 20

HR/DAY	MON	TUES	WEDS	THUR	FRI	SAT	SUN
0	1	1	1	1	1	1	1
1	1	1	1	1	1	1	1
2	1	1	1	1	1	1	1
3	1	1	1	1	1	1	1
4	1	1	1	1	1	1	1
5	1	1	1	1	1	1	1
6	2	2	2	2	2	1	1
7	2	2	2	2	2	1	1
8	2	2	2	2	2	1	1
9	2	2	2	2	2	2	1
10	2	2	2	2	2	2	2
11	2	2	2	2	2	2	2
12	2	2	2	2	2	2	2
13	2	2	2	2	2	2	2
14	2	2	2	2	2	2	2
15	2	2	2	2	2	2	2
16	2	2	2	2	2	2	2
17	2	2	2	2	2	2	2
18	2	2	2	2	2	2	2
19	2	2	2	2	2	2	2
20	1	2	2	2	2	1	2
21	1	2	2	1	2	2	1
22	1	2	2	1	2	2	1
23	1	1	1	1	1	1	1

SUMMER SEASON MAY 21 THRU SEPTEMBER 15

HR/DAY	MON	TUES	WEDS	THUR	FRI	SAT	SUN
0	1	1	1	1	1	1	1
1	1	1	1	1	1	1	1
2	1	1	1	1	1	1	1
3	1	1	1	1	1	1	1
4	1	1	1	1	1	1	1
5	1	1	1	1	1	1	1
6	2	2	2	2	2	1	1
7	2	2	2	2	2	1	1
8	2	2	2	2	2	1	1
9	2	2	2	2	2	2	1
10	2	2	2	2	2	2	2
11	2	2	2	2	2	2	2
12	2	2	2	2	2	2	2
13	2	2	2	2	2	2	2
14	2	2	2	2	2	2	2
15	2	2	2	2	2	2	2
16	2	2	2	2	2	2	2
17	2	2	2	2	2	2	2
18	2	2	2	2	2	2	2
19	2	2	2	2	2	2	2
20	2	2	2	2	2	2	2
21	1	2	2	2	2	2	1
22	1	1	1	2	2	2	1
23	1	1	1	1	2	1	1

LANES REQUIRED TO BE OPEN BY HOUR AND TIME OF DAY

FALL SEASON SEPTEMBER 16 THRU November 30

HR/DAY	MON	TUES	WEDS	THUR	FRI	SAT	SUN
0	1	1	1	1	1	1	1
1	1	1	1	1	1	1	1
2	1	1	1	1	1	1	1
3	1	1	1	1	1	1	1
4	1	1	1	1	1	1	1
5	1	1	1	1	1	1	1
6	2	2	2	2	2	1	1
7	2	2	2	2	2	1	1
8	2	2	2	2	2	1	1
9	2	2	2	2	2	2	1
10	2	2	2	2	2	2	1
11	2	2	2	2	2	2	2
12	2	2	2	2	2	2	2
13	2	2	2	2	2	2	2
14	2	2	2	2	2	2	2
15	2	2	2	2	2	2	2
16	2	2	2	2	2	2	2
17	2	2	2	2	2	2	2
18	2	2	2	2	2	2	2
19	2	2	2	2	2	2	2
20	1	2	2	2	2	1	1
21	1	1	2	2	2	2	1
22	1	2	2	2	2	2	1
23	1	1	1	1	1	1	1

WINTER SEAS. DECEMBER 1 THRU February 28

HR/DAY	MON	TUES	WEDS	THUR	FRI	SAT	SUN
0	1	1	1	1	1	1	1
1	1	1	1	1	1	1	1
2	1	1	1	1	1	1	1
3	1	1	1	1	1	1	1
4	1	1	1	1	1	1	1
5	1	1	1	1	1	1	1
6	2	2	2	2	2	1	1
7	2	2	2	2	2	1	1
8	2	2	2	2	2	1	1
9	2	2	2	2	2	1	1
10	2	2	2	2	2	2	1
11	2	2	2	2	2	2	1
12	2	2	2	2	2	2	2
13	2	2	2	2	2	2	2
14	2	2	2	2	2	2	2
15	2	2	2	2	2	2	2
16	2	2	2	2	2	2	2
17	2	2	2	2	2	2	2
18	2	2	2	2	2	2	2
19	2	2	2	2	2	1	1
20	1	1	2	2	1	1	1
21	1	2	1	2	2	2	1
22	1	2	2	1	2	2	1
23	1	1	1	1	1	1	1

NIAGARA: I-190 SOUTHBOUND INTERCHANGES N16 TO N15 (1,150 VEH/HR/LANE)

LANES REQUIRED TO BE OPEN BY HOUR AND TIME OF DAY

SPRING SEASON MARCH 1 THRU MAY 20

HR/DAY	MON	TUES	WEDS	THUR	FRI	SAT	SUN
0	1	1	1	1	1	1	1
1	1	1	1	1	1	1	1
2	1	1	1	1	1	1	1
3	1	1	1	1	1	1	1
4	1	1	1	1	1	1	1
5	1	1	1	1	1	1	1
6	2	2	2	2	2	1	1
7	2	2	2	2	2	1	1
8	2	2	2	2	2	2	1
9	2	2	2	2	2	2	1
10	2	2	2	2	2	2	2
11	2	2	2	2	2	2	2
12	2	2	2	2	2	2	2
13	2	2	2	2	2	2	2
14	2	2	2	2	2	2	2
15	2	2	2	2	2	2	2
16	2	2	2	2	2	2	2
17	2	2	2	2	2	2	2
18	2	2	2	2	2	2	2
19	2	2	2	2	2	2	2
20	2	2	2	2	2	2	2
21	1	1	1	2	2	2	1
22	1	1	1	1	1	1	1
23	1	1	1	1	1	1	1

SUMMER SEASON MAY 21 THRU SEPTEMBER 15

HR/DAY	MON	TUES	WEDS	THUR	FRI	SAT	SUN
0	1	1	1	1	1	1	1
1	1	1	1	1	1	1	1
2	1	1	1	1	1	1	1
3	1	1	1	1	1	1	1
4	1	1	1	1	1	1	1
5	1	1	1	1	1	1	1
6	2	2	2	2	2	1	1
7	2	2	2	2	2	1	1
8	2	2	2	2	2	2	1
9	2	2	2	2	2	2	2
10	2	2	2	2	2	2	2
11	2	2	2	2	2	2	2
12	2	2	2	2	2	2	2
13	2	2	2	2	2	2	2
14	2	2	2	2	2	2	2
15	2	2	2	2	2	2	2
16	2	2	2	2	2	2	2
17	2	2	2	2	2	2	2
18	2	2	2	2	2	2	2
19	2	2	2	2	2	2	2
20	2	2	2	2	2	2	2
21	1	2	2	2	2	2	1
22	1	2	2	2	2	2	1
23	1	1	1	1	1	1	1

LANES REQUIRED TO BE OPEN BY HOUR AND TIME OF DAY

FALL SEASON SEPTEMBER 16 THRU November 30

HR/DAY	MON	TUES	WEDS	THUR	FRI	SAT	SUN
0	1	1	1	1	1	1	1
1	1	1	1	1	1	1	1
2	1	1	1	1	1	1	1
3	1	1	1	1	1	1	1
4	1	1	1	1	1	1	1
5	1	1	1	1	1	1	1
6	2	2	2	2	2	1	1
7	2	2	2	2	2	1	1
8	2	2	2	2	2	2	1
9	2	2	2	2	2	2	2
10	2	2	2	2	2	2	2
11	2	2	2	2	2	2	2
12	2	2	2	2	2	2	2
13	2	2	2	2	2	2	2
14	2	2	2	2	2	2	2
15	2	2	2	2	2	2	2
16	2	2	2	2	2	2	2
17	2	2	2	2	2	2	2
18	2	2	2	2	2	2	2
19	2	2	2	2	2	2	1
20	1	1	1	2	2	2	1
21	1	1	1	1	2	1	1
22	1	1	1	1	2	1	1
23	1	1	1	1	1	1	1

WINTER SEAS. DECEMBER 1 THRU February 28

HR/DAY	MON	TUES	WEDS	THUR	FRI	SAT	SUN
0	1	1	1	1	1	1	1
1	1	1	1	1	1	1	1
2	1	1	1	1	1	1	1
3	1	1	1	1	1	1	1
4	1	1	1	1	1	1	1
5	1	1	1	1	1	1	1
6	2	2	2	2	2	1	1
7	2	2	2	2	2	1	1
8	2	2	2	2	2	1	1
9	2	2	2	2	2	2	1
10	2	2	2	2	2	2	2
11	2	2	2	2	2	2	2
12	2	2	2	2	2	2	2
13	2	2	2	2	2	2	2
14	2	2	2	2	2	2	2
15	2	2	2	2	2	2	2
16	2	2	2	2	2	2	2
17	2	2	2	2	2	2	2
18	2	2	2	2	2	2	2
19	2	2	2	2	2	2	1
20	1	1	1	1	1	1	1
21	1	1	1	1	1	1	1
22	1	1	1	1	1	1	1
23	1	1	1	1	1	1	1

NOTES:

1) THE NEW YORK STATE THRUWAY IS A LIMITED ACCESS, HIGH-SPEED, HIGH-VOLUME HIGHWAY. TRAFFIC SHALL BE MAINTAINED IN ACCORDANCE WITH THE *MANUAL ON UNIFORM TRAFFIC CONTROL DEVICES (MUTCD)*, THE *WORK ZONE TRAFFIC CONTROL PLANS*, AND THE *STANDARD SPECIFICATIONS* SECTION 619 AS AMENDED BY THE AUTHORITY.

2) LANE CLOSURES ON THE THRUWAY SHALL ONLY BE ALLOWED IN ACCORDANCE WITH THESE TRAFFIC MANAGEMENT TABLE(S), UNLESS INDICATED OTHERWISE IN THE CONTRACT PLANS OR PROPOSAL DOCUMENTS.

3) LANE CLOSURE CHARTS SHALL APPLY AS FOLLOWS:

- 1,150 VEH/HR/LANE: APPLIES TO ALL WORK REQUIRING LANE CLOSURE(S) EXCEPT AS PERMITTED BELOW.

- 1,300 VEH/HR/LANE: APPLIES TO NON-EVASIVE WORK WHERE WORKERS AND/OR EQUIPMENT ARE LOCATED 4 FT. OR MORE FROM TRAVEL (SPACE) LANE, OR AS APPROVED BY THE THRUWAY PROJECT ENGINEER. WORK SHOULD BE ABLE TO BE IMMEDIATELY STOPPED AND LANE CLOSURE(S) REMOVED IN THE EVENT QUEUES, GREATER THAN 1 MILE, DEVELOP.

NEW YORK STATE OF OPPORTUNITY. Thruway Authority

U.S. CUSTOMARY STANDARD SHEET

LANE CLOSURE CHARTS
1,150 VEHICLES PER HOUR
BUFFALO DIVISION
(SHEET 32 OF 37)

APPROVED SEPTEMBER 1, 2018

/S/ PATRICK THOMPSON, P.E.
DIRECTOR DESIGN SUPPORT SERVICES BUREAU

ISSUED UNDER DB 18-003

TA 619-33

NIAGARA: I-190 NORTHBOUND INTERCHANGES N16 TO N17 (1,150 VEH/HR/LANE)

LANES REQUIRED TO BE OPEN BY HOUR AND TIME OF DAY

SPRING SEASON MARCH 1 THRU MAY 20

HR/DAY	MON	TUES	WEDS	THUR	FRI	SAT	SUN
0	1	1	1	1	1	1	1
1	1	1	1	1	1	1	1
2	1	1	1	1	1	1	1
3	1	1	1	1	1	1	1
4	1	1	1	1	1	1	1
5	1	1	1	1	1	1	1
6	3	3	3	3	3	1	1
7	3	3	3	3	3	1	1
8	3	3	3	3	3	2	1
9	2	2	2	2	2	2	2
10	2	2	2	2	2	2	2
11	2	2	2	2	2	3	3
12	3	2	2	2	3	3	3
13	3	2	2	2	3	3	3
14	3	3	3	3	3	3	3
15	3	3	3	3	3	3	3
16	3	3	3	3	3	3	3
17	3	3	3	3	3	3	3
18	3	3	3	3	3	3	2
19	2	2	2	2	2	2	2
20	2	2	2	2	2	2	2
21	2	2	2	2	2	2	2
22	1	1	2	2	2	2	1
23	1	1	1	1	1	1	1

SUMMER SEASON MAY 21 THRU SEPTEMBER 15

HR/DAY	MON	TUES	WEDS	THUR	FRI	SAT	SUN
0	1	1	1	1	1	1	1
1	1	1	1	1	1	1	1
2	1	1	1	1	1	1	1
3	1	1	1	1	1	1	1
4	1	1	1	1	1	1	1
5	1	1	1	1	1	1	1
6	3	3	3	3	3	1	1
7	3	3	3	3	3	1	1
8	3	3	3	3	3	2	1
9	2	2	2	2	2	2	2
10	2	2	2	3	3	3	2
11	3	3	3	3	3	3	3
12	3	3	3	3	3	3	3
13	3	3	3	3	3	3	3
14	3	3	3	3	3	3	3
15	3	3	3	3	3	3	3
16	3	3	3	3	3	3	3
17	3	3	3	3	3	3	3
18	3	3	3	3	3	3	2
19	2	2	2	3	3	3	2
20	2	2	2	2	2	2	2
21	2	2	2	2	2	2	2
22	1	1	1	2	2	2	1
23	1	1	1	1	2	2	1

LANES REQUIRED TO BE OPEN BY HOUR AND TIME OF DAY

FALL SEASON SEPTEMBER 16 THRU November 30

HR/DAY	MON	TUES	WEDS	THUR	FRI	SAT	SUN
0	1	1	1	1	1	1	1
1	1	1	1	1	1	1	1
2	1	1	1	1	1	1	1
3	1	1	1	1	1	1	1
4	1	1	1	1	1	1	1
5	1	1	1	1	1	1	1
6	3	3	3	3	3	1	1
7	3	3	3	3	3	1	1
8	3	3	3	3	3	2	1
9	2	2	2	2	2	2	2
10	2	2	2	2	2	2	2
11	2	2	2	2	2	3	2
12	2	2	2	2	3	3	3
13	3	2	2	2	3	3	3
14	3	3	3	3	3	3	3
15	3	3	3	3	3	3	3
16	3	3	3	3	3	3	3
17	3	3	3	3	3	3	3
18	3	3	3	3	3	3	3
19	2	2	2	2	3	2	2
20	2	2	2	2	2	2	2
21	2	2	2	2	2	2	1
22	1	1	2	2	2	2	1
23	1	1	1	1	1	1	1

WINTER SEAS. DECEMBER 1 THRU February 28

HR/DAY	MON	TUES	WEDS	THUR	FRI	SAT	SUN
0	1	1	1	1	1	1	1
1	1	1	1	1	1	1	1
2	1	1	1	1	1	1	1
3	1	1	1	1	1	1	1
4	1	1	1	1	1	1	1
5	1	1	1	1	1	1	1
6	3	3	3	3	3	1	1
7	3	3	3	3	3	1	1
8	3	3	3	3	3	1	1
9	2	2	2	2	2	2	1
10	2	2	2	2	2	2	2
11	2	2	2	2	2	2	2
12	2	2	2	2	3	3	2
13	2	2	2	2	3	3	2
14	3	3	3	3	3	3	2
15	3	3	3	3	3	3	3
16	3	3	3	3	3	3	3
17	3	3	3	3	3	3	2
18	3	3	3	3	3	2	2
19	2	2	2	2	2	2	2
20	2	2	2	2	2	2	2
21	2	2	2	2	2	2	1
22	1	2	1	2	2	2	1
23	1	1	1	1	2	1	1

NIAGARA: I-190 SOUTHBOUND INTERCHANGES N17 TO N16 (1,150 VEH/HR/LANE)

LANES REQUIRED TO BE OPEN BY HOUR AND TIME OF DAY

SPRING SEASON MARCH 1 THRU MAY 20

HR/DAY	MON	TUES	WEDS	THUR	FRI	SAT	SUN
0	1	1	1	1	1	1	1
1	1	1	1	1	1	1	1
2	1	1	1	1	1	1	1
3	1	1	1	1	1	1	1
4	1	1	1	1	1	1	1
5	1	1	1	1	1	1	1
6	3	3	3	3	3	1	1
7	3	3	3	3	3	2	1
8	3	3	3	3	3	2	1
9	2	2	2	2	2	2	2
10	2	2	2	2	2	2	2
11	2	2	2	2	3	2	2
12	2	2	2	2	3	3	2
13	2	2	2	2	3	3	3
14	3	2	3	3	3	3	3
15	3	3	3	3	3	3	3
16	3	3	3	3	3	3	3
17	3	3	3	3	3	3	2
18	2	2	2	2	3	3	2
19	2	2	2	2	2	2	2
20	2	2	2	2	2	2	2
21	1	1	1	2	2	2	2
22	1	1	1	1	2	2	1
23	1	1	1	1	1	1	1

SUMMER SEASON MAY 21 THRU SEPTEMBER 15

HR/DAY	MON	TUES	WEDS	THUR	FRI	SAT	SUN
0	1	1	1	1	1	1	1
1	1	1	1	1	1	1	1
2	1	1	1	1	1	1	1
3	1	1	1	1	1	1	1
4	1	1	1	1	1	1	1
5	1	1	1	1	1	1	1
6	3	3	3	3	3	1	1
7	3	3	3	3	3	2	1
8	3	3	3	3	3	2	2
9	3	2	3	3	3	2	2
10	2	2	2	3	3	3	2
11	3	3	3	3	3	3	3
12	3	3	3	3	3	3	3
13	3	3	3	3	3	3	3
14	3	3	3	3	3	3	3
15	3	3	3	3	3	3	3
16	3	3	3	3	3	3	3
17	3	3	3	3	3	3	3
18	2	2	3	3	3	3	3
19	2	2	2	2	2	3	3
20	2	2	2	2	2	3	2
21	2	2	2	2	2	2	2
22	1	2	2	2	2	2	2
23	1	2	2	2	2	2	1

LANES REQUIRED TO BE OPEN BY HOUR AND TIME OF DAY

FALL SEASON SEPTEMBER 16 THRU November 30

HR/DAY	MON	TUES	WEDS	THUR	FRI	SAT	SUN
0	1	1	1	1	1	1	1
1	1	1	1	1	1	1	1
2	1	1	1	1	1	1	1
3	1	1	1	1	1	1	1
4	1	1	1	1	1	1	1
5	1	1	1	1	1	1	1
6	3	3	3	3	3	1	1
7	3	3	3	3	3	2	1
8	3	3	3	3	3	2	2
9	2	2	3	3	3	2	2
10	2	2	2	2	3	2	2
11	2	2	2	2	3	2	2
12	2	2	2	2	3	3	3
13	2	2	2	2	3	3	2
14	3	3	3	3	3	3	2
15	3	3	3	3	3	3	2
16	3	3	3	3	3	3	2
17	3	3	3	3	3	3	2
18	2	2	3	3	3	3	2
19	2	2	2	2	2	2	2
20	1	1	2	2	2	2	1
21	1	1	1	2	2	2	1
22	1	1	1	1	2	2	1
23	1	1	1	1	1	1	1

WINTER SEAS. DECEMBER 1 THRU February 28

HR/DAY	MON	TUES	WEDS	THUR	FRI	SAT	SUN
0	1	1	1	1	1	1	1
1	1	1	1	1	1	1	1
2	1	1	1	1	1	1	1
3	1	1	1	1	1	1	1
4	1	1	1	1	1	1	1
5	1	1	1	1	1	1	1
6	3	3	3	3	3	1	1
7	3	3	3	3	3	1	1
8	3	3	3	3	3	2	1
9	2	2	2	2	2	2	2
10	2	2	2	2	2	2	2
11	2	2	2	2	2	2	2
12	2	2	2	2	2	2	2
13	2	2	2	2	2	2	2
14	2	2	2	2	3	2	2
15	3	3	3	3	3	3	2
16	3	3	3	3	3	3	2
17	3	3	3	3	3	2	2
18	2	2	2	2	2	2	2
19	2	2	2	2	2	2	2
20	1	1	1	2	2	2	1
21	1	1	1	1	2	2	1
22	1	1	1	1	1	1	1
23	1	1	1	1	1	1	1

NOTES:

1) THE NEW YORK STATE THRUWAY IS A LIMITED ACCESS, HIGH-SPEED, HIGH-VOLUME HIGHWAY. TRAFFIC SHALL BE MAINTAINED IN ACCORDANCE WITH THE *MANUAL ON UNIFORM TRAFFIC CONTROL DEVICES (MUTCD)*, THE *WORK ZONE TRAFFIC CONTROL PLANS*, AND THE *STANDARD SPECIFICATIONS* SECTION 619 AS AMENDED BY THE AUTHORITY.

2) LANE CLOSURES ON THE THRUWAY SHALL ONLY BE ALLOWED IN ACCORDANCE WITH THESE TRAFFIC MANAGEMENT TABLE(S), UNLESS INDICATED OTHERWISE IN THE CONTRACT PLANS OR PROPOSAL DOCUMENTS.

3) LANE CLOSURE CHARTS SHALL APPLY AS FOLLOWS:

- 1,150 VEH/HR/LANE: APPLIES TO ALL WORK REQUIRING LANE CLOSURE(S) EXCEPT AS PERMITTED BELOW.

- 1,300 VEH/HR/LANE: APPLIES TO NON-EVASIVE WORK WHERE WORKERS AND/OR EQUIPMENT ARE LOCATED 4 FT. OR MORE FROM TRAVEL (SPACE) LANE, OR AS APPROVED BY THE THRUWAY PROJECT ENGINEER. WORK SHOULD BE ABLE TO BE IMMEDIATELY STOPPED AND LANE CLOSURE(S) REMOVED IN THE EVENT QUEUES, GREATER THAN 1 MILE, DEVELOP.

NEW YORK STATE OF OPPORTUNITY. Thruway Authority

U.S. CUSTOMARY STANDARD SHEET

LANE CLOSURE CHARTS
1,150 VEHICLES PER HOUR
BUFFALO DIVISION
(SHEET 33 OF 37)

APPROVED SEPTEMBER 1, 2018

/S/ PATRICK THOMPSON, P.E.
DIRECTOR DESIGN SUPPORT SERVICES BUREAU

ISSUED UNDER DB 18-003

TA 619-33

NIAGARA: I-190 NORTHBOUND INTERCHANGES N17 TO N18A (1,150 VEH/HR/LANE)

LANES REQUIRED TO BE OPEN BY HOUR AND TIME OF DAY

SPRING SEASON MARCH 1 THRU MAY 20

HR/DAY	MON	TUES	WEDS	THUR	FRI	SAT	SUN
0	1	1	1	1	1	1	1
1	1	1	1	1	1	1	1
2	1	1	1	1	1	1	1
3	1	1	1	1	1	1	1
4	1	1	1	1	1	1	1
5	1	1	1	1	1	1	1
6	2	2	2	2	2	1	1
7	2	2	2	2	2	1	1
8	2	2	2	2	2	2	1
9	2	2	2	2	2	2	2
10	2	2	2	2	2	2	2
11	2	2	2	2	2	2	2
12	2	2	2	2	2	2	2
13	2	2	2	2	2	2	2
14	2	2	2	2	2	2	2
15	2	2	2	2	2	2	2
16	2	2	2	2	2	2	2
17	2	2	2	2	2	2	2
18	2	2	2	2	2	2	2
19	2	2	2	2	2	2	2
20	2	2	2	2	2	2	2
21	2	2	2	2	2	2	2
22	1	1	1	2	2	2	1
23	1	1	1	1	1	1	1

SUMMER SEASON MAY 21 THRU SEPTEMBER 15

HR/DAY	MON	TUES	WEDS	THUR	FRI	SAT	SUN
0	1	1	1	1	1	1	1
1	1	1	1	1	1	1	1
2	1	1	1	1	1	1	1
3	1	1	1	1	1	1	1
4	1	1	1	1	1	1	1
5	1	1	1	1	1	1	1
6	2	2	2	2	2	1	1
7	2	2	2	2	2	1	1
8	2	2	2	2	2	2	1
9	2	2	2	2	2	2	2
10	2	2	2	2	2	2	2
11	2	2	2	2	2	2	2
12	2	2	2	2	2	2	2
13	2	2	2	2	2	2	2
14	2	2	2	2	2	2	2
15	2	2	2	2	2	2	2
16	2	2	2	2	2	2	2
17	2	2	2	2	2	2	2
18	2	2	2	2	2	2	2
19	2	2	2	2	2	2	2
20	2	2	2	2	2	2	2
21	2	2	2	2	2	2	2
22	1	1	2	2	2	2	1
23	1	1	1	1	2	2	1

LANES REQUIRED TO BE OPEN BY HOUR AND TIME OF DAY

FALL SEASON SEPTEMBER 16 THRU November 30

HR/DAY	MON	TUES	WEDS	THUR	FRI	SAT	SUN
0	1	1	1	1	1	1	1
1	1	1	1	1	1	1	1
2	1	1	1	1	1	1	1
3	1	1	1	1	1	1	1
4	1	1	1	1	1	1	1
5	1	1	1	1	1	1	1
6	2	2	2	2	2	1	1
7	2	2	2	2	2	1	1
8	2	2	2	2	2	2	1
9	2	2	2	2	2	2	2
10	2	2	2	2	2	2	2
11	2	2	2	2	2	2	2
12	2	2	2	2	2	2	2
13	2	2	2	2	2	2	2
14	2	2	2	2	2	2	2
15	2	2	2	2	2	2	2
16	2	2	2	2	2	2	2
17	2	2	2	2	2	2	2
18	2	2	2	2	2	2	2
19	2	2	2	2	2	2	2
20	2	2	2	2	2	2	2
21	2	2	2	2	2	2	1
22	1	1	2	2	2	2	1
23	1	1	1	1	1	1	1

WINTER SEAS. DECEMBER 1 THRU February 28

HR/DAY	MON	TUES	WEDS	THUR	FRI	SAT	SUN
0	1	1	1	1	1	1	1
1	1	1	1	1	1	1	1
2	1	1	1	1	1	1	1
3	1	1	1	1	1	1	1
4	1	1	1	1	1	1	1
5	1	1	1	1	1	1	1
6	2	2	2	2	2	1	1
7	2	2	2	2	2	1	1
8	2	2	2	2	2	1	1
9	2	2	2	2	2	2	1
10	2	2	2	2	2	2	2
11	2	2	2	2	2	2	2
12	2	2	2	2	2	2	2
13	2	2	2	2	2	2	2
14	2	2	2	2	2	2	2
15	2	2	2	2	2	2	2
16	2	2	2	2	2	2	2
17	2	2	2	2	2	2	2
18	2	2	2	2	2	2	2
19	2	2	2	2	2	2	2
20	2	2	2	2	2	2	2
21	2	2	2	2	2	2	1
22	1	1	1	1	2	2	1
23	1	1	1	1	2	1	1

NIAGARA: I-190 SOUTHBOUND INTERCHANGES N18A TO N17 (1,150 VEH/HR/LANE)

LANES REQUIRED TO BE OPEN BY HOUR AND TIME OF DAY

SPRING SEASON MARCH 1 THRU MAY 20

HR/DAY	MON	TUES	WEDS	THUR	FRI	SAT	SUN
0	1	1	1	1	1	1	1
1	1	1	1	1	1	1	1
2	1	1	1	1	1	1	1
3	1	1	1	1	1	1	1
4	1	1	1	1	1	1	1
5	1	1	1	1	1	1	1
6	2	2	2	2	2	1	1
7	2	2	2	2	2	2	1
8	2	2	2	2	2	2	1
9	2	2	2	2	2	2	2
10	2	2	2	2	2	2	2
11	2	2	2	2	2	2	2
12	2	2	2	2	2	2	2
13	2	2	2	2	2	2	2
14	2	2	2	2	2	2	2
15	2	2	2	2	2	2	2
16	2	2	2	2	2	2	2
17	2	2	2	2	2	2	2
18	2	2	2	2	2	2	2
19	2	2	2	2	2	2	2
20	2	1	2	2	2	2	2
21	1	1	1	1	2	2	2
22	1	1	1	1	2	2	1
23	1	1	1	1	1	2	1

SUMMER SEASON MAY 21 THRU SEPTEMBER 15

HR/DAY	MON	TUES	WEDS	THUR	FRI	SAT	SUN
0	1	1	1	1	1	2	1
1	1	1	1	1	1	1	1
2	1	1	1	1	1	1	1
3	1	1	1	1	1	1	1
4	1	1	1	1	1	1	1
5	1	1	1	1	1	1	1
6	2	2	2	2	2	1	1
7	2	2	2	2	2	2	1
8	2	2	2	2	2	2	2
9	2	2	2	2	2	2	2
10	2	2	2	2	2	2	2
11	2	2	2	2	2	2	2
12	2	2	2	2	2	2	2
13	2	2	2	2	2	2	2
14	2	2	2	2	2	2	2
15	2	2	2	2	2	2	2
16	2	2	2	2	2	2	2
17	2	2	2	2	2	2	2
18	2	2	2	2	2	2	2
19	2	2	2	2	2	2	2
20	2	2	2	2	2	2	2
21	2	2	2	2	2	2	2
22	1	2	2	2	2	2	2
23	1	1	2	2	2	2	1

LANES REQUIRED TO BE OPEN BY HOUR AND TIME OF DAY

FALL SEASON SEPTEMBER 16 THRU November 30

HR/DAY	MON	TUES	WEDS	THUR	FRI	SAT	SUN
0	1	1	1	1	1	1	1
1	1	1	1	1	1	1	1
2	1	1	1	1	1	1	1
3	1	1	1	1	1	1	1
4	1	1	1	1	1	1	1
5	1	1	1	1	1	1	1
6	2	2	2	2	2	1	1
7	2	2	2	2	2	2	1
8	2	2	2	2	2	2	2
9	2	2	2	2	2	2	2
10	2	2	2	2	2	2	2
11	2	2	2	2	2	2	2
12	2	2	2	2	2	2	2
13	2	2	2	2	2	2	2
14	2	2	2	2	2	2	2
15	2	2	2	2	2	2	2
16	2	2	2	2	2	2	2
17	2	2	2	2	2	2	2
18	2	2	2	2	2	2	2
19	2	2	2	2	2	2	2
20	1	1	2	2	2	2	2
21	1	1	1	2	2	2	1
22	1	1	1	1	2	2	1
23	1	1	1	1	1	1	1

WINTER SEAS. DECEMBER 1 THRU February 28

HR/DAY	MON	TUES	WEDS	THUR	FRI	SAT	SUN
0	1	1	1	1	1	1	1
1	1	1	1	1	1	1	1
2	1	1	1	1	1	1	1
3	1	1	1	1	1	1	1
4	1	1	1	1	1	1	1
5	1	1	1	1	1	1	1
6	2	2	2	2	2	1	1
7	2	2	2	2	2	1	1
8	2	2	2	2	2	2	1
9	2	2	2	2	2	2	2
10	2	2	2	2	2	2	2
11	2	2	2	2	2	2	2
12	2	2	2	2	2	2	2
13	2	2	2	2	2	2	2
14	2	2	2	2	2	2	2
15	2	2	2	2	2	2	2
16	2	2	2	2	2	2	2
17	2	2	2	2	2	2	2
18	2	2	2	2	2	2	2
19	2	2	2	2	2	2	2
20	1	1	1	1	2	2	1
21	1	1	1	1	2	2	1
22	1	1	1	1	2	2	1
23	1	1	1	1	1	1	1

NOTES:

1) THE NEW YORK STATE THRUWAY IS A LIMITED ACCESS, HIGH-SPEED, HIGH-VOLUME HIGHWAY. TRAFFIC SHALL BE MAINTAINED IN ACCORDANCE WITH THE *MANUAL ON UNIFORM TRAFFIC CONTROL DEVICES (MUTCD)*, THE *WORK ZONE TRAFFIC CONTROL PLANS*, AND THE *STANDARD SPECIFICATIONS* SECTION 619 AS AMENDED BY THE AUTHORITY.

2) LANE CLOSURES ON THE THRUWAY SHALL ONLY BE ALLOWED IN ACCORDANCE WITH THESE TRAFFIC MANAGEMENT TABLE(S), UNLESS INDICATED OTHERWISE IN THE CONTRACT PLANS OR PROPOSAL DOCUMENTS.

3) LANE CLOSURE CHARTS SHALL APPLY AS FOLLOWS:

- 1,150 VEH/HR/LANE: APPLIES TO ALL WORK REQUIRING LANE CLOSURE(S) EXCEPT AS PERMITTED BELOW.

- 1,300 VEH/HR/LANE: APPLIES TO NON-EVASIVE WORK WHERE WORKERS AND/OR EQUIPMENT ARE LOCATED 4 FT. OR MORE FROM TRAVEL (SPACE) LANE, OR AS APPROVED BY THE THRUWAY PROJECT ENGINEER. WORK SHOULD BE ABLE TO BE IMMEDIATELY STOPPED AND LANE CLOSURE(S) REMOVED IN THE EVENT QUEUES, GREATER THAN 1 MILE, DEVELOP.

NEW YORK STATE OF OPPORTUNITY. Thruway Authority

U.S. CUSTOMARY STANDARD SHEET

LANE CLOSURE CHARTS
1,150 VEHICLES PER HOUR
BUFFALO DIVISION
(SHEET 34 OF 37)

APPROVED SEPTEMBER 1, 2018

/S/ PATRICK THOMPSON, P.E.
DIRECTOR DESIGN SUPPORT SERVICES BUREAU

ISSUED UNDER DB 18-003

TA 619-33

NIAGARA: I-190 NORTHBOUND INTERCHANGES N18B TO N19 (1,150 VEH/HR/LANE)

LANES REQUIRED TO BE OPEN BY HOUR AND TIME OF DAY

SPRING SEASON MARCH 1 THRU MAY 20

HR/DAY	MON	TUES	WEDS	THUR	FRI	SAT	SUN
0	1	1	1	1	1	1	1
1	1	1	1	1	1	1	1
2	1	1	1	1	1	1	1
3	1	1	1	1	1	1	1
4	1	1	1	1	1	1	1
5	1	1	1	1	1	1	1
6	2	1	1	1	1	1	1
7	2	2	2	2	2	1	1
8	2	2	2	2	2	1	1
9	2	2	2	2	2	2	1
10	2	2	2	2	2	2	2
11	2	2	2	2	2	2	2
12	2	2	2	2	2	2	2
13	2	2	2	2	2	2	2
14	2	2	2	2	2	2	2
15	2	2	2	2	2	2	2
16	2	2	2	2	2	2	2
17	2	2	2	2	2	2	2
18	2	2	2	2	2	2	2
19	2	2	2	2	2	2	2
20	1	1	1	2	2	2	1
21	1	1	1	1	2	2	1
22	1	1	1	1	1	2	1
23	1	1	1	1	1	1	1

SUMMER SEASON MAY 21 THRU SEPTEMBER 15

HR/DAY	MON	TUES	WEDS	THUR	FRI	SAT	SUN
0	1	1	1	1	1	1	1
1	1	1	1	1	1	1	1
2	1	1	1	1	1	1	1
3	1	1	1	1	1	1	1
4	1	1	1	1	1	1	1
5	1	1	1	1	1	1	1
6	2	2	2	2	2	1	1
7	2	2	2	2	2	1	1
8	2	2	2	2	2	1	1
9	2	2	2	2	2	2	2
10	2	2	2	2	2	2	2
11	2	2	2	2	2	2	2
12	2	2	2	2	2	2	2
13	2	2	2	2	2	2	2
14	2	2	2	2	2	2	2
15	2	2	2	2	2	2	2
16	2	2	2	2	2	2	2
17	2	2	2	2	2	2	2
18	2	2	2	2	2	2	2
19	2	2	2	2	2	2	2
20	2	2	2	2	2	2	2
21	1	1	1	2	2	2	1
22	1	1	1	1	1	1	1
23	1	1	1	1	1	1	1

LANES REQUIRED TO BE OPEN BY HOUR AND TIME OF DAY

FALL SEASON SEPTEMBER 16 THRU November 30

HR/DAY	MON	TUES	WEDS	THUR	FRI	SAT	SUN
0	1	1	1	1	1	1	1
1	1	1	1	1	1	1	1
2	1	1	1	1	1	1	1
3	1	1	1	1	1	1	1
4	1	1	1	1	1	1	1
5	1	1	1	1	1	1	1
6	2	2	2	2	2	1	1
7	2	2	2	2	2	1	1
8	2	2	2	2	2	1	1
9	2	2	2	2	2	2	1
10	2	2	2	2	2	2	2
11	2	2	2	2	2	2	2
12	2	2	2	2	2	2	2
13	2	2	2	2	2	2	2
14	2	2	2	2	2	2	2
15	2	2	2	2	2	2	2
16	2	2	2	2	2	2	2
17	2	2	2	2	2	2	2
18	2	2	2	2	2	2	2
19	2	2	2	2	2	2	2
20	1	1	1	2	2	2	1
21	1	1	1	1	2	1	1
22	1	1	1	1	1	1	1
23	1	1	1	1	1	1	1

WINTER SEAS. DECEMBER 1 THRU February 28

HR/DAY	MON	TUES	WEDS	THUR	FRI	SAT	SUN
0	1	1	1	1	1	1	1
1	1	1	1	1	1	1	1
2	1	1	1	1	1	1	1
3	1	1	1	1	1	1	1
4	1	1	1	1	1	1	1
5	1	1	1	1	1	1	1
6	1	1	1	1	1	1	1
7	2	2	2	2	2	1	1
8	2	2	2	2	2	1	1
9	2	2	2	2	2	1	1
10	2	2	2	2	2	2	1
11	2	2	2	2	2	2	2
12	2	2	2	2	2	2	2
13	2	2	2	2	2	2	2
14	2	2	2	2	2	2	2
15	2	2	2	2	2	2	2
16	2	2	2	2	2	2	2
17	2	2	2	2	2	2	2
18	2	2	2	2	2	2	2
19	2	2	2	2	2	2	2
20	1	1	1	1	2	1	1
21	1	1	1	1	1	1	1
22	1	1	1	1	1	1	1
23	1	1	1	1	1	1	1

NIAGARA: I-190 SOUTHBOUND INTERCHANGES N19 TO N18B (1,150 VEH/HR/LANE)

LANES REQUIRED TO BE OPEN BY HOUR AND TIME OF DAY

SPRING SEASON MARCH 1 THRU MAY 20

HR/DAY	MON	TUES	WEDS	THUR	FRI	SAT	SUN
0	1	1	1	1	1	1	1
1	1	1	1	1	1	1	1
2	1	1	1	1	1	1	1
3	1	1	1	1	1	1	1
4	1	1	1	1	1	1	1
5	1	1	1	1	1	1	1
6	2	2	2	2	2	1	1
7	2	2	2	2	2	1	1
8	2	2	2	2	2	2	1
9	2	2	2	2	2	2	2
10	2	2	2	2	2	2	2
11	2	2	2	2	2	2	2
12	2	2	2	2	2	2	2
13	2	2	2	2	2	2	2
14	2	2	2	2	2	2	2
15	2	2	2	2	2	2	2
16	2	2	2	2	2	2	2
17	2	2	2	2	2	2	2
18	2	2	2	2	2	2	2
19	2	2	2	2	2	2	2
20	1	1	2	2	2	2	2
21	1	1	1	1	2	2	1
22	1	1	1	1	2	2	1
23	1	1	1	1	1	1	1

SUMMER SEASON MAY 21 THRU SEPTEMBER 15

HR/DAY	MON	TUES	WEDS	THUR	FRI	SAT	SUN
0	1	1	1	1	1	1	1
1	1	1	1	1	1	1	1
2	1	1	1	1	1	1	1
3	1	1	1	1	1	1	1
4	1	1	1	1	1	1	1
5	1	1	1	1	1	1	1
6	2	2	2	2	2	1	1
7	2	2	2	2	2	1	1
8	2	2	2	2	2	2	1
9	2	2	2	2	2	2	2
10	2	2	2	2	2	2	2
11	2	2	2	2	2	2	2
12	2	2	2	2	2	2	2
13	2	2	2	2	2	2	2
14	2	2	2	2	2	2	2
15	2	2	2	2	2	2	2
16	2	2	2	2	2	2	2
17	2	2	2	2	2	2	2
18	2	2	2	2	2	2	2
19	2	2	2	2	2	2	2
20	2	2	2	2	2	2	2
21	2	2	2	2	2	2	2
22	1	2	2	2	2	2	2
23	1	1	1	1	2	2	1

LANES REQUIRED TO BE OPEN BY HOUR AND TIME OF DAY

FALL SEASON SEPTEMBER 16 THRU November 30

HR/DAY	MON	TUES	WEDS	THUR	FRI	SAT	SUN
0	1	1	1	1	1	1	1
1	1	1	1	1	1	1	1
2	1	1	1	1	1	1	1
3	1	1	1	1	1	1	1
4	1	1	1	1	1	1	1
5	1	1	1	1	1	1	1
6	2	2	2	2	2	1	1
7	2	2	2	2	2	1	1
8	2	2	2	2	2	2	1
9	2	2	2	2	2	2	2
10	2	2	2	2	2	2	2
11	2	2	2	2	2	2	2
12	2	2	2	2	2	2	2
13	2	2	2	2	2	2	2
14	2	2	2	2	2	2	2
15	2	2	2	2	2	2	2
16	2	2	2	2	2	2	2
17	2	2	2	2	2	2	2
18	2	2	2	2	2	2	2
19	2	2	2	2	2	2	2
20	1	1	1	2	2	2	1
21	1	1	1	1	2	2	1
22	1	1	1	1	2	2	1
23	1	1	1	1	1	1	1

WINTER SEAS. DECEMBER 1 THRU February 28

HR/DAY	MON	TUES	WEDS	THUR	FRI	SAT	SUN
0	1	1	1	1	1	1	1
1	1	1	1	1	1	1	1
2	1	1	1	1	1	1	1
3	1	1	1	1	1	1	1
4	1	1	1	1	1	1	1
5	1	1	1	1	1	1	1
6	2	2	2	2	2	1	1
7	2	2	2	2	2	1	1
8	2	2	2	2	2	1	1
9	2	2	2	2	2	2	1
10	2	2	2	2	2	2	2
11	2	2	2	2	2	2	2
12	2	2	2	2	2	2	2
13	2	2	2	2	2	2	2
14	2	2	2	2	2	2	2
15	2	2	2	2	2	2	2
16	2	2	2	2	2	2	2
17	2	2	2	2	2	2	2
18	2	2	2	2	2	2	2
19	1	1	1	1	2	2	1
20	1	1	1	1	1	1	1
21	1	1	1	1	1	1	1
22	1	1	1	1	1	1	1
23	1	1	1	1	1	1	1

NOTES:

1) THE NEW YORK STATE THRUWAY IS A LIMITED ACCESS, HIGH-SPEED, HIGH-VOLUME HIGHWAY. TRAFFIC SHALL BE MAINTAINED IN ACCORDANCE WITH THE *MANUAL ON UNIFORM TRAFFIC CONTROL DEVICES (MUTCD)*, THE *WORK ZONE TRAFFIC CONTROL PLANS*, AND THE *STANDARD SPECIFICATIONS* SECTION 619 AS AMENDED BY THE AUTHORITY.

2) LANE CLOSURES ON THE THRUWAY SHALL ONLY BE ALLOWED IN ACCORDANCE WITH THESE TRAFFIC MANAGEMENT TABLE(S), UNLESS INDICATED OTHERWISE IN THE CONTRACT PLANS OR PROPOSAL DOCUMENTS.

3) LANE CLOSURE CHARTS SHALL APPLY AS FOLLOWS:

- 1,150 VEH/HR/LANE: APPLIES TO ALL WORK REQUIRING LANE CLOSURE(S) EXCEPT AS PERMITTED BELOW.

- 1,300 VEH/HR/LANE: APPLIES TO NON-EVASIVE WORK WHERE WORKERS AND/OR EQUIPMENT ARE LOCATED 4 FT. OR MORE FROM TRAVEL (SPACE) LANE, OR AS APPROVED BY THE THRUWAY PROJECT ENGINEER. WORK SHOULD BE ABLE TO BE IMMEDIATELY STOPPED AND LANE CLOSURE(S) REMOVED IN THE EVENT QUEUES, GREATER THAN 1 MILE, DEVELOP.

NEW YORK STATE OF OPPORTUNITY. Thruway Authority

U.S. CUSTOMARY STANDARD SHEET

LANE CLOSURE CHARTS
1,150 VEHICLES PER HOUR
BUFFALO DIVISION
(SHEET 35 OF 37)

APPROVED SEPTEMBER 1, 2018

/S/ PATRICK THOMPSON, P.E.
DIRECTOR DESIGN SUPPORT SERVICES BUREAU

ISSUED UNDER DB 18-003

TA 619-33

NIAGARA: I-190 NORTHBOUND INTERCHANGES N19 TO N20 (1,150 VEH/HR/LANE)

LANES REQUIRED TO BE OPEN BY HOUR AND TIME OF DAY

SPRING SEASON MARCH 1 THRU MAY 20

HR/DAY	MON	TUES	WEDS	THUR	FRI	SAT	SUN
0	1	1	1	1	1	1	1
1	1	1	1	1	1	1	1
2	1	1	1	1	1	1	1
3	1	1	1	1	1	1	1
4	1	1	1	1	1	1	1
5	1	1	1	1	1	1	1
6	2	2	2	2	2	1	1
7	2	2	2	2	2	1	1
8	2	2	2	2	2	1	1
9	2	2	2	2	2	2	1
10	2	2	2	2	2	2	2
11	2	2	2	2	2	2	2
12	2	2	2	2	2	2	2
13	2	2	2	2	2	2	2
14	2	2	2	2	2	2	2
15	2	2	2	2	2	2	2
16	2	2	2	2	2	2	2
17	2	2	2	2	2	2	2
18	2	2	2	2	2	2	2
19	2	2	2	2	2	2	2
20	2	1	1	2	2	2	1
21	1	1	1	1	2	2	1
22	1	1	1	1	1	2	1
23	1	1	1	1	1	1	1

SUMMER SEASON MAY 21 THRU SEPTEMBER 15

HR/DAY	MON	TUES	WEDS	THUR	FRI	SAT	SUN
0	1	1	1	1	1	1	1
1	1	1	1	1	1	1	1
2	1	1	1	1	1	1	1
3	1	1	1	1	1	1	1
4	1	1	1	1	1	1	1
5	1	1	1	1	1	1	1
6	2	2	2	2	2	1	1
7	2	2	2	2	2	1	1
8	2	2	2	2	2	2	1
9	2	2	2	2	2	2	2
10	2	2	2	2	2	2	2
11	2	2	2	2	2	2	2
12	2	2	2	2	2	2	2
13	2	2	2	2	2	2	2
14	2	2	2	2	2	2	2
15	2	2	2	2	2	2	2
16	2	2	2	2	2	2	2
17	2	2	2	2	2	2	2
18	2	2	2	2	2	2	2
19	2	2	2	2	2	2	2
20	2	2	2	2	2	2	2
21	1	1	1	2	2	2	1
22	1	1	1	1	1	1	1
23	1	1	1	1	1	1	1

LANES REQUIRED TO BE OPEN BY HOUR AND TIME OF DAY

FALL SEASON SEPTEMBER 16 THRU November 30

HR/DAY	MON	TUES	WEDS	THUR	FRI	SAT	SUN
0	1	1	1	1	1	1	1
1	1	1	1	1	1	1	1
2	1	1	1	1	1	1	1
3	1	1	1	1	1	1	1
4	1	1	1	1	1	1	1
5	1	1	1	1	1	1	1
6	2	2	2	2	2	1	1
7	2	2	2	2	2	1	1
8	2	2	2	2	2	1	1
9	2	2	2	2	2	2	1
10	2	2	2	2	2	2	2
11	2	2	2	2	2	2	2
12	2	2	2	2	2	2	2
13	2	2	2	2	2	2	2
14	2	2	2	2	2	2	2
15	2	2	2	2	2	2	2
16	2	2	2	2	2	2	2
17	2	2	2	2	2	2	2
18	2	2	2	2	2	2	2
19	2	2	2	2	2	2	2
20	1	1	1	2	2	2	1
21	1	1	1	1	2	1	1
22	1	1	1	1	1	1	1
23	1	1	1	1	1	1	1

WINTER SEAS. DECEMBER 1 THRU February 28

HR/DAY	MON	TUES	WEDS	THUR	FRI	SAT	SUN
0	1	1	1	1	1	1	1
1	1	1	1	1	1	1	1
2	1	1	1	1	1	1	1
3	1	1	1	1	1	1	1
4	1	1	1	1	1	1	1
5	1	1	1	1	1	1	1
6	2	2	2	2	2	1	1
7	2	2	2	2	2	1	1
8	2	2	2	2	2	1	1
9	2	2	2	2	2	1	1
10	2	2	2	2	2	2	2
11	2	2	2	2	2	2	2
12	2	2	2	2	2	2	2
13	2	2	2	2	2	2	2
14	2	2	2	2	2	2	2
15	2	2	2	2	2	2	2
16	2	2	2	2	2	2	2
17	2	2	2	2	2	2	2
18	2	2	2	2	2	2	2
19	2	2	2	2	2	2	2
20	1	1	1	1	2	1	1
21	1	1	1	1	1	1	1
22	1	1	1	1	1	1	1
23	1	1	1	1	1	1	1

NIAGARA: I-190 SOUTHBOUND INTERCHANGES N20 TO N19 (1,150 VEH/HR/LANE)

LANES REQUIRED TO BE OPEN BY HOUR AND TIME OF DAY

SPRING SEASON MARCH 1 THRU MAY 20

HR/DAY	MON	TUES	WEDS	THUR	FRI	SAT	SUN
0	1	1	1	1	1	1	1
1	1	1	1	1	1	1	1
2	1	1	1	1	1	1	1
3	1	1	1	1	1	1	1
4	1	1	1	1	1	1	1
5	1	1	1	1	1	1	1
6	2	2	2	2	2	1	1
7	2	2	2	2	2	1	1
8	2	2	2	2	2	2	1
9	2	2	2	2	2	2	2
10	2	2	2	2	2	2	2
11	2	2	2	2	2	2	2
12	2	2	2	2	2	2	2
13	2	2	2	2	2	2	2
14	2	2	2	2	2	2	2
15	2	2	2	2	2	2	2
16	2	2	2	2	2	2	2
17	2	2	2	2	2	2	2
18	2	2	2	2	2	2	2
19	2	1	2	2	2	2	2
20	1	1	1	1	2	2	2
21	1	1	1	1	2	2	1
22	1	1	1	1	2	2	1
23	1	1	1	1	1	1	1

SUMMER SEASON MAY 21 THRU SEPTEMBER 15

HR/DAY	MON	TUES	WEDS	THUR	FRI	SAT	SUN
0	1	1	1	1	1	1	1
1	1	1	1	1	1	1	1
2	1	1	1	1	1	1	1
3	1	1	1	1	1	1	1
4	1	1	1	1	1	1	1
5	1	1	1	1	1	1	1
6	2	2	2	2	2	1	1
7	2	2	2	2	2	1	1
8	2	2	2	2	2	2	1
9	2	2	2	2	2	2	2
10	2	2	2	2	2	2	2
11	2	2	2	2	2	2	2
12	2	2	2	2	2	2	2
13	2	2	2	2	2	2	2
14	2	2	2	2	2	2	2
15	2	2	2	2	2	2	2
16	2	2	2	2	2	2	2
17	2	2	2	2	2	2	2
18	2	2	2	2	2	2	2
19	2	2	2	2	2	2	2
20	2	2	2	2	2	2	2
21	1	2	2	2	2	2	2
22	1	2	2	1	2	2	1
23	1	1	1	1	2	2	1

LANES REQUIRED TO BE OPEN BY HOUR AND TIME OF DAY

FALL SEASON SEPTEMBER 16 THRU November 30

HR/DAY	MON	TUES	WEDS	THUR	FRI	SAT	SUN
0	1	1	1	1	1	1	1
1	1	1	1	1	1	1	1
2	1	1	1	1	1	1	1
3	1	1	1	1	1	1	1
4	1	1	1	1	1	1	1
5	1	1	1	1	1	1	1
6	2	2	2	2	2	1	1
7	2	2	2	2	2	1	1
8	2	2	2	2	2	1	1
9	2	2	2	2	2	2	2
10	2	2	2	2	2	2	2
11	2	2	2	2	2	2	2
12	2	2	2	2	2	2	2
13	2	2	2	2	2	2	2
14	2	2	2	2	2	2	2
15	2	2	2	2	2	2	2
16	2	2	2	2	2	2	2
17	2	2	2	2	2	2	2
18	2	2	2	2	2	2	2
19	1	1	2	2	2	2	2
20	1	1	1	1	2	2	1
21	1	1	1	1	2	2	1
22	1	1	1	1	1	2	1
23	1	1	1	1	1	1	1

WINTER SEAS. DECEMBER 1 THRU February 28

HR/DAY	MON	TUES	WEDS	THUR	FRI	SAT	SUN
0	1	1	1	1	1	1	1
1	1	1	1	1	1	1	1
2	1	1	1	1	1	1	1
3	1	1	1	1	1	1	1
4	1	1	1	1	1	1	1
5	1	1	1	1	1	1	1
6	2	2	2	2	2	1	1
7	2	2	2	2	2	1	1
8	2	2	2	2	2	1	1
9	2	2	2	2	2	2	1
10	2	2	2	2	2	2	2
11	2	2	2	2	2	2	2
12	2	2	2	2	2	2	2
13	2	2	2	2	2	2	2
14	2	2	2	2	2	2	2
15	2	2	2	2	2	2	2
16	2	2	2	2	2	2	2
17	2	2	2	2	2	2	2
18	2	2	2	2	2	2	2
19	1	1	1	1	2	2	1
20	1	1	1	1	1	1	1
21	1	1	1	1	2	2	1
22	1	1	1	1	1	1	1
23	1	1	1	1	1	1	1

NOTES:

1) THE NEW YORK STATE THRUWAY IS A LIMITED ACCESS, HIGH-SPEED, HIGH-VOLUME HIGHWAY. TRAFFIC SHALL BE MAINTAINED IN ACCORDANCE WITH THE *MANUAL ON UNIFORM TRAFFIC CONTROL DEVICES (MUTCD)*, THE *WORK ZONE TRAFFIC CONTROL PLANS*, AND THE *STANDARD SPECIFICATIONS* SECTION 619 AS AMENDED BY THE AUTHORITY.

2) LANE CLOSURES ON THE THRUWAY SHALL ONLY BE ALLOWED IN ACCORDANCE WITH THESE TRAFFIC MANAGEMENT TABLE(S), UNLESS INDICATED OTHERWISE IN THE CONTRACT PLANS OR PROPOSAL DOCUMENTS.

3) LANE CLOSURE CHARTS SHALL APPLY AS FOLLOWS:

- 1,150 VEH/HR/LANE: APPLIES TO ALL WORK REQUIRING LANE CLOSURE(S) EXCEPT AS PERMITTED BELOW.

- 1,300 VEH/HR/LANE: APPLIES TO NON-EVASIVE WORK WHERE WORKERS AND/OR EQUIPMENT ARE LOCATED 4 FT. OR MORE FROM TRAVEL (SPACE) LANE, OR AS APPROVED BY THE THRUWAY PROJECT ENGINEER. WORK SHOULD BE ABLE TO BE IMMEDIATELY STOPPED AND LANE CLOSURE(S) REMOVED IN THE EVENT QUEUES, GREATER THAN 1 MILE, DEVELOP.

NEW YORK STATE OF OPPORTUNITY. Thruway Authority

U.S. CUSTOMARY STANDARD SHEET

LANE CLOSURE CHARTS
1,150 VEHICLES PER HOUR
BUFFALO DIVISION
(SHEET 36 OF 37)

APPROVED SEPTEMBER 1, 2018

/S/ PATRICK THOMPSON, P.E.
DIRECTOR DESIGN SUPPORT SERVICES BUREAU

ISSUED UNDER DB 18-003

TA 619-33

NIAGARA: I-190 NORTHBOUND INTERCHANGES N20 TO N21 (1,150 VEH/HR/LANE)

LANES REQUIRED TO BE OPEN BY HOUR AND TIME OF DAY

SPRING SEASON MARCH 1 THRU MAY 20

HR/DAY	MON	TUES	WEDS	THUR	FRI	SAT	SUN
0	1	1	1	1	1	1	1
1	1	1	1	1	1	1	1
2	1	1	1	1	1	1	1
3	1	1	1	1	1	1	1
4	1	1	1	1	1	1	1
5	1	1	1	1	1	1	1
6	2	2	2	2	2	1	1
7	2	2	2	2	2	1	1
8	2	2	2	2	2	2	1
9	2	2	2	2	2	2	2
10	2	2	2	2	2	2	2
11	2	2	2	2	2	2	2
12	2	2	2	2	2	2	2
13	2	2	2	2	2	2	2
14	2	2	2	2	2	2	2
15	2	2	2	2	2	2	2
16	2	2	2	2	2	2	2
17	2	2	2	2	2	2	2
18	2	2	2	2	2	2	2
19	2	2	2	2	2	2	2
20	2	1	2	2	2	2	2
21	1	1	1	1	2	2	1
22	1	1	1	1	1	2	1
23	1	1	1	1	1	1	1

SUMMER SEASON MAY 21 THRU SEPTEMBER 15

HR/DAY	MON	TUES	WEDS	THUR	FRI	SAT	SUN
0	1	1	1	1	1	1	1
1	1	1	1	1	1	1	1
2	1	1	1	1	1	1	1
3	1	1	1	1	1	1	1
4	1	1	1	1	1	1	1
5	1	1	1	1	1	1	1
6	2	2	2	2	2	1	1
7	2	2	2	2	2	1	1
8	2	2	2	2	2	2	1
9	2	2	2	2	2	2	2
10	2	2	2	2	2	2	2
11	2	2	2	2	2	2	2
12	2	2	2	2	2	2	2
13	2	2	2	2	2	2	2
14	2	2	2	2	2	2	2
15	2	2	2	2	2	2	2
16	2	2	2	2	2	2	2
17	2	2	2	2	2	2	2
18	2	2	2	2	2	2	2
19	2	2	2	2	2	2	2
20	2	2	2	2	2	2	2
21	1	1	1	2	2	2	2
22	1	1	1	1	2	1	1
23	1	1	1	1	1	1	1

LANES REQUIRED TO BE OPEN BY HOUR AND TIME OF DAY

FALL SEASON SEPTEMBER 16 THRU November 30

HR/DAY	MON	TUES	WEDS	THUR	FRI	SAT	SUN
0	1	1	1	1	1	1	1
1	1	1	1	1	1	1	1
2	1	1	1	1	1	1	1
3	1	1	1	1	1	1	1
4	1	1	1	1	1	1	1
5	1	1	1	1	1	1	1
6	2	2	2	2	2	1	1
7	2	2	2	2	2	1	1
8	2	2	2	2	2	2	1
9	2	2	2	2	2	2	2
10	2	2	2	2	2	2	2
11	2	2	2	2	2	2	2
12	2	2	2	2	2	2	2
13	2	2	2	2	2	2	2
14	2	2	2	2	2	2	2
15	2	2	2	2	2	2	2
16	2	2	2	2	2	2	2
17	2	2	2	2	2	2	2
18	2	2	2	2	2	2	2
19	2	2	2	2	2	2	2
20	1	1	1	2	2	2	1
21	1	1	1	1	2	1	1
22	1	1	1	1	1	1	1
23	1	1	1	1	1	1	1

WINTER SEAS. DECEMBER 1 THRU February 28

HR/DAY	MON	TUES	WEDS	THUR	FRI	SAT	SUN
0	1	1	1	1	1	1	1
1	1	1	1	1	1	1	1
2	1	1	1	1	1	1	1
3	1	1	1	1	1	1	1
4	1	1	1	1	1	1	1
5	1	1	1	1	1	1	1
6	2	2	2	2	2	1	1
7	2	2	2	2	2	1	1
8	2	2	2	2	2	1	1
9	2	2	2	2	2	2	1
10	2	2	2	2	2	2	2
11	2	2	2	2	2	2	2
12	2	2	2	2	2	2	2
13	2	2	2	2	2	2	2
14	2	2	2	2	2	2	2
15	2	2	2	2	2	2	2
16	2	2	2	2	2	2	2
17	2	2	2	2	2	2	2
18	2	2	2	2	2	2	2
19	2	2	2	2	2	2	2
20	1	1	1	1	2	1	1
21	1	1	1	1	1	1	1
22	1	1	1	1	1	1	1
23	1	1	1	1	1	1	1

NIAGARA: I-190 SOUTHBOUND INTERCHANGES N21 TO N20 (1,150 VEH/HR/LANE)

LANES REQUIRED TO BE OPEN BY HOUR AND TIME OF DAY

SPRING SEASON MARCH 1 THRU MAY 20

HR/DAY	MON	TUES	WEDS	THUR	FRI	SAT	SUN
0	1	1	1	1	1	1	1
1	1	1	1	1	1	1	1
2	1	1	1	1	1	1	1
3	1	1	1	1	1	1	1
4	1	1	1	1	1	1	1
5	1	1	1	1	1	1	1
6	2	2	2	2	2	1	1
7	2	2	2	2	2	1	1
8	2	2	2	2	2	2	1
9	2	2	2	2	2	2	2
10	2	2	2	2	2	2	2
11	2	2	2	2	2	2	2
12	2	2	2	2	2	2	2
13	2	2	2	2	2	2	2
14	2	2	2	2	2	2	2
15	2	2	2	2	2	2	2
16	2	2	2	2	2	2	2
17	2	2	2	2	2	2	2
18	2	2	2	2	2	2	2
19	2	2	2	2	2	2	2
20	1	1	2	2	2	2	2
21	1	1	1	1	2	2	1
22	1	1	1	1	2	2	1
23	1	1	1	1	1	1	1

SUMMER SEASON MAY 21 THRU SEPTEMBER 15

HR/DAY	MON	TUES	WEDS	THUR	FRI	SAT	SUN
0	1	1	1	1	1	1	1
1	1	1	1	1	1	1	1
2	1	1	1	1	1	1	1
3	1	1	1	1	1	1	1
4	1	1	1	1	1	1	1
5	1	1	1	1	1	1	1
6	2	2	2	2	2	1	1
7	2	2	2	2	2	1	1
8	2	2	2	2	2	2	1
9	2	2	2	2	2	2	2
10	2	2	2	2	2	2	2
11	2	2	2	2	2	2	2
12	2	2	2	2	2	2	2
13	2	2	2	2	2	2	2
14	2	2	2	2	2	2	2
15	2	2	2	2	2	2	2
16	2	2	2	2	2	2	2
17	2	2	2	2	2	2	2
18	2	2	2	2	2	2	2
19	2	2	2	2	2	2	2
20	2	2	2	2	2	2	2
21	2	2	2	2	2	2	2
22	1	2	2	2	2	2	2
23	1	1	1	1	2	2	1

LANES REQUIRED TO BE OPEN BY HOUR AND TIME OF DAY

FALL SEASON SEPTEMBER 16 THRU November 30

HR/DAY	MON	TUES	WEDS	THUR	FRI	SAT	SUN
0	1	1	1	1	1	1	1
1	1	1	1	1	1	1	1
2	1	1	1	1	1	1	1
3	1	1	1	1	1	1	1
4	1	1	1	1	1	1	1
5	1	1	1	1	1	1	1
6	2	2	2	2	2	1	1
7	2	2	2	2	2	1	1
8	2	2	2	2	2	2	1
9	2	2	2	2	2	2	2
10	2	2	2	2	2	2	2
11	2	2	2	2	2	2	2
12	2	2	2	2	2	2	2
13	2	2	2	2	2	2	2
14	2	2	2	2	2	2	2
15	2	2	2	2	2	2	2
16	2	2	2	2	2	2	2
17	2	2	2	2	2	2	2
18	2	2	2	2	2	2	2
19	2	2	2	2	2	2	2
20	1	1	1	2	2	2	1
21	1	1	1	1	2	2	1
22	1	1	1	1	2	2	1
23	1	1	1	1	1	1	1

WINTER SEAS. DECEMBER 1 THRU February 28

HR/DAY	MON	TUES	WEDS	THUR	FRI	SAT	SUN
0	1	1	1	1	1	1	1
1	1	1	1	1	1	1	1
2	1	1	1	1	1	1	1
3	1	1	1	1	1	1	1
4	1	1	1	1	1	1	1
5	1	1	1	1	1	1	1
6	2	2	2	2	2	1	1
7	2	2	2	2	2	1	1
8	2	2	2	2	2	1	1
9	2	2	2	2	2	2	1
10	2	2	2	2	2	2	2
11	2	2	2	2	2	2	2
12	2	2	2	2	2	2	2
13	2	2	2	2	2	2	2
14	2	2	2	2	2	2	2
15	2	2	2	2	2	2	2
16	2	2	2	2	2	2	2
17	2	2	2	2	2	2	2
18	2	2	2	2	2	2	2
19	2	2	2	2	2	2	2
20	1	1	1	1	2	2	1
21	1	1	1	1	2	2	1
22	1	1	1	1	1	1	1
23	1	1	1	1	1	1	1

NOTES:

1) THE NEW YORK STATE THRUWAY IS A LIMITED ACCESS, HIGH-SPEED, HIGH-VOLUME HIGHWAY. TRAFFIC SHALL BE MAINTAINED IN ACCORDANCE WITH THE *MANUAL ON UNIFORM TRAFFIC CONTROL DEVICES (MUTCD)*, THE *WORK ZONE TRAFFIC CONTROL PLANS*, AND THE *STANDARD SPECIFICATIONS* SECTION 619 AS AMENDED BY THE AUTHORITY.

2) LANE CLOSURES ON THE THRUWAY SHALL ONLY BE ALLOWED IN ACCORDANCE WITH THESE TRAFFIC MANAGEMENT TABLE(S), UNLESS INDICATED OTHERWISE IN THE CONTRACT PLANS OR PROPOSAL DOCUMENTS.

3) LANE CLOSURE CHARTS SHALL APPLY AS FOLLOWS:

- 1,150 VEH/HR/LANE: APPLIES TO ALL WORK REQUIRING LANE CLOSURE(S) EXCEPT AS PERMITTED BELOW.

- 1,300 VEH/HR/LANE: APPLIES TO NON-EVASIVE WORK WHERE WORKERS AND/OR EQUIPMENT ARE LOCATED 4 FT. OR MORE FROM TRAVEL (SPACE) LANE, OR AS APPROVED BY THE THRUWAY PROJECT ENGINEER. WORK SHOULD BE ABLE TO BE IMMEDIATELY STOPPED AND LANE CLOSURE(S) REMOVED IN THE EVENT QUEUES, GREATER THAN 1 MILE, DEVELOP.

NEW YORK STATE OF OPPORTUNITY. Thruway Authority

U.S. CUSTOMARY STANDARD SHEET

LANE CLOSURE CHARTS
1,150 VEHICLES PER HOUR
BUFFALO DIVISION
(SHEET 37 OF 37)

APPROVED SEPTEMBER 1, 2018

/S/ PATRICK THOMPSON, P.E.
DIRECTOR DESIGN SUPPORT SERVICES BUREAU

ISSUED UNDER DB 18-003

TA 619-33

I-87 NORTHBOUND INTERCHANGES 18 TO 19 (1,300 VEH/HR/LANE)

LANES REQUIRED TO BE OPEN BY HOUR AND TIME OF DAY

SPRING SEASON MARCH 1 THRU MAY 20

HR/DAY	MON	TUES	WEDS	THUR	FRI	SAT	SUN
0	1	1	1	1	1	1	1
1	1	1	1	1	1	1	1
2	1	1	1	1	1	1	1
3	1	1	1	1	1	1	1
4	1	1	1	1	1	1	1
5	1	1	1	1	1	1	1
6	1	1	1	1	1	1	1
7	1	1	1	1	1	1	1
8	1	1	1	1	2	2	1
9	1	1	1	1	2	2	1
10	2	1	1	1	2	2	1
11	2	1	1	1	2	2	2
12	2	1	1	2	2	2	2
13	2	1	1	2	2	2	2
14	2	1	1	2	2	2	2
15	2	2	2	2	2	2	2
16	2	2	2	2	2	2	2
17	2	1	2	2	2	2	2
18	1	1	1	1	2	1	2
19	1	1	1	1	2	1	2
20	1	1	1	1	2	1	2
21	1	1	1	1	2	1	1
22	1	1	1	1	1	1	1
23	1	1	1	1	1	1	1

SUMMER SEASON MAY 21 THRU SEPTEMBER 15

HR/DAY	MON	TUES	WEDS	THUR	FRI	SAT	SUN
0	1	1	1	1	1	1	1
1	1	1	1	1	1	1	1
2	1	1	1	1	1	1	1
3	1	1	1	1	1	1	1
4	1	1	1	1	1	1	1
5	1	1	1	1	1	1	1
6	1	1	1	1	1	1	1
7	2	1	1	1	2	2	1
8	2	1	1	2	2	2	1
9	2	1	2	2	2	2	2
10	2	2	2	2	2	2	2
11	2	2	2	2	2	2	2
12	2	2	2	2	2	2	2
13	2	2	2	2	2	2	2
14	2	2	2	2	2	2	2
15	2	2	2	2	2	2	2
16	2	2	2	2	2	2	2
17	2	2	2	2	2	2	2
18	1	1	2	2	2	2	2
19	1	1	1	2	2	1	2
20	1	1	1	2	2	1	2
21	1	1	1	1	2	1	1
22	1	1	1	1	2	1	1
23	1	1	1	1	1	1	1

LANES REQUIRED TO BE OPEN BY HOUR AND TIME OF DAY

FALL SEASON SEPTEMBER 16 THRU November 30

HR/DAY	MON	TUES	WEDS	THUR	FRI	SAT	SUN
0	1	1	1	1	1	1	1
1	1	1	1	1	1	1	1
2	1	1	1	1	1	1	1
3	1	1	1	1	1	1	1
4	1	1	1	1	1	1	1
5	1	1	1	1	1	1	1
6	1	1	1	1	1	1	1
7	1	1	1	1	1	1	1
8	1	1	1	1	1	2	1
9	1	1	1	2	2	2	1
10	2	1	1	2	2	2	2
11	2	1	2	2	2	2	2
12	2	2	2	2	2	2	2
13	2	1	2	2	2	2	2
14	2	2	2	2	2	2	2
15	2	2	2	2	2	2	2
16	2	2	2	2	2	2	2
17	2	2	2	2	2	2	2
18	1	1	2	1	2	1	2
19	1	1	1	1	2	1	2
20	1	1	1	1	2	1	1
21	1	1	1	1	2	1	1
22	1	1	1	1	2	1	1
23	1	1	1	1	1	1	1

WINTER SEAS. DECEMBER 1 THRU February 28

HR/DAY	MON	TUES	WEDS	THUR	FRI	SAT	SUN
0	1	1	1	1	1	1	1
1	1	1	1	1	1	1	1
2	1	1	1	1	1	1	1
3	1	1	1	1	1	1	1
4	1	1	1	1	1	1	1
5	1	1	1	1	1	1	1
6	1	1	1	1	1	1	1
7	1	1	1	1	1	1	1
8	1	1	2	2	2	2	1
9	1	1	1	1	2	2	1
10	1	1	2	1	2	2	2
11	2	1	2	2	2	2	2
12	2	1	2	2	2	2	2
13	2	2	2	2	2	2	2
14	2	2	2	2	2	2	2
15	2	2	2	2	2	2	2
16	2	2	2	2	2	2	2
17	2	1	2	2	2	1	2
18	1	1	1	2	2	1	1
19	1	1	1	1	2	1	1
20	1	1	1	1	2	1	1
21	1	1	1	1	2	1	1
22	1	1	1	1	2	1	1
23	1	1	1	1	1	1	1

I-87 SOUTHBOUND INTERCHANGES 19 TO 18 (1,300 VEH/HR/LANE)

LANES REQUIRED TO BE OPEN BY HOUR AND TIME OF DAY

SPRING SEASON MARCH 1 THRU MAY 20

HR/DAY	MON	TUES	WEDS	THUR	FRI	SAT	SUN
0	1	1	1	1	1	1	1
1	1	1	1	1	1	1	1
2	1	1	1	1	1	1	1
3	1	1	1	1	1	1	1
4	1	1	1	1	1	1	1
5	1	1	1	1	1	1	1
6	1	1	1	1	1	1	1
7	1	1	1	1	1	1	1
8	1	1	1	1	1	1	1
9	1	1	1	1	2	2	1
10	2	1	1	1	2	2	2
11	2	1	1	1	2	2	2
12	2	1	1	1	2	2	2
13	2	1	1	1	2	2	2
14	2	1	1	2	2	2	2
15	2	1	2	2	2	2	2
16	2	2	2	2	2	2	2
17	2	2	2	2	2	2	2
18	1	1	1	1	2	1	2
19	1	1	1	1	1	1	2
20	1	1	1	1	1	1	2
21	1	1	1	1	1	1	1
22	1	1	1	1	1	1	1
23	1	1	1	1	1	1	1

SUMMER SEASON MAY 21 THRU SEPTEMBER 15

HR/DAY	MON	TUES	WEDS	THUR	FRI	SAT	SUN
0	1	1	1	1	1	1	1
1	1	1	1	1	1	1	1
2	1	1	1	1	1	1	1
3	1	1	1	1	1	1	1
4	1	1	1	1	1	1	1
5	1	1	1	1	1	1	1
6	1	1	1	1	1	1	1
7	2	1	1	1	1	1	1
8	2	1	1	1	1	2	1
9	2	2	1	2	2	2	2
10	2	2	2	2	2	2	2
11	2	2	2	2	2	2	2
12	2	2	2	2	2	2	2
13	2	2	2	2	2	2	2
14	2	2	2	2	2	2	2
15	2	2	2	2	2	2	2
16	2	2	2	2	2	2	2
17	2	2	2	2	2	2	2
18	2	1	2	2	2	2	2
19	2	1	1	1	2	2	2
20	2	1	1	1	1	1	2
21	1	1	1	1	1	1	2
22	1	1	1	1	1	1	1
23	1	1	1	1	1	1	1

LANES REQUIRED TO BE OPEN BY HOUR AND TIME OF DAY

FALL SEASON SEPTEMBER 16 THRU November 30

HR/DAY	MON	TUES	WEDS	THUR	FRI	SAT	SUN
0	1	1	1	1	1	1	1
1	1	1	1	1	1	1	1
2	1	1	1	1	1	1	1
3	1	1	1	1	1	1	1
4	1	1	1	1	1	1	1
5	1	1	1	1	1	1	1
6	1	1	1	1	1	1	1
7	1	1	1	1	1	1	1
8	1	1	1	1	1	1	1
9	2	1	1	1	1	2	2
10	2	2	1	2	2	2	2
11	2	2	2	2	2	2	2
12	2	2	2	2	2	2	2
13	2	2	2	2	2	2	2
14	2	2	2	2	2	2	2
15	2	2	2	2	2	2	2
16	2	2	2	2	2	2	2
17	2	2	2	2	2	2	2
18	2	2	1	1	2	2	2
19	1	1	1	1	1	1	2
20	1	1	1	1	1	1	2
21	1	1	1	1	1	1	1
22	1	1	1	1	1	1	1
23	1	1	1	1	1	1	1

WINTER SEAS. DECEMBER 1 THRU February 28

HR/DAY	MON	TUES	WEDS	THUR	FRI	SAT	SUN
0	1	1	1	1	1	1	1
1	1	1	1	1	1	1	1
2	1	1	1	1	1	1	1
3	1	1	1	1	1	1	1
4	1	1	1	1	1	1	1
5	1	1	1	1	1	1	1
6	1	1	1	1	1	1	1
7	1	1	1	1	1	1	1
8	1	1	1	1	1	1	1
9	1	1	1	1	1	1	1
10	2	1	2	1	2	2	2
11	2	2	2	2	2	2	2
12	2	2	2	2	2	2	2
13	2	2	2	2	2	2	2
14	2	2	2	2	2	2	2
15	2	2	2	2	2	2	2
16	2	2	2	2	2	2	2
17	2	2	2	2	2	2	2
18	2	1	1	1	2	1	2
19	2	1	1	1	1	1	2
20	1	1	1	1	1	1	1
21	1	1	1	1	1	1	1
22	1	1	1	1	1	1	1
23	1	1	1	1	1	1	1

NOTES:

1) THE NEW YORK STATE THRUWAY IS A LIMITED ACCESS, HIGH-SPEED, HIGH-VOLUME HIGHWAY. TRAFFIC SHALL BE MAINTAINED IN ACCORDANCE WITH THE *MANUAL ON UNIFORM TRAFFIC CONTROL DEVICES (MUTCD)*, THE *WORK ZONE TRAFFIC CONTROL PLANS*, AND THE *STANDARD SPECIFICATIONS* SECTION 619 AS AMENDED BY THE AUTHORITY.

2) LANE CLOSURES ON THE THRUWAY SHALL ONLY BE ALLOWED IN ACCORDANCE WITH THESE TRAFFIC MANAGEMENT TABLE(S), UNLESS INDICATED OTHERWISE IN THE CONTRACT PLANS OR PROPOSAL DOCUMENTS.

3) LANE CLOSURE CHARTS SHALL APPLY AS FOLLOWS:

- 1,150 VEH/HR/LANE: APPLIES TO ALL WORK REQUIRING LANE CLOSURE(S) EXCEPT AS PERMITTED BELOW.

- 1,300 VEH/HR/LANE: APPLIES TO NON-EVASIVE WORK WHERE WORKERS AND/OR EQUIPMENT ARE LOCATED 4 FT. OR MORE FROM TRAVEL (SPACE) LANE, OR AS APPROVED BY THE THRUWAY PROJECT ENGINEER. WORK SHOULD BE ABLE TO BE IMMEDIATELY STOPPED AND LANE CLOSURE(S) REMOVED IN THE EVENT QUEUES, GREATER THAN 1 MILE, DEVELOP.

NEW YORK STATE OF OPPORTUNITY. Thruway Authority

U.S. CUSTOMARY STANDARD SHEET

LANE CLOSURE CHARTS
1300 VEHICLES PER HOUR
ALBANY DIVISION
(SHEET 1 OF 18)

APPROVED SEPTEMBER 1, 2018

/S/ PATRICK THOMPSON, P.E.
DIRECTOR DESIGN SUPPORT
SERVICES BUREAU

ISSUED UNDER DB 18-003

TA 619-35

I-87 NORTHBOUND INTERCHANGES 19 TO 20 (1,300 VEH/HR/LANE)

LANES REQUIRED TO BE OPEN BY HOUR AND TIME OF DAY

SPRING SEASON MARCH 1 THRU MAY 20

HR/DAY	MON	TUES	WEDS	THUR	FRI	SAT	SUN
0	1	1	1	1	1	1	1
1	1	1	1	1	1	1	1
2	1	1	1	1	1	1	1
3	1	1	1	1	1	1	1
4	1	1	1	1	1	1	1
5	1	1	1	1	1	1	1
6	1	1	1	1	1	1	1
7	1	1	1	1	1	1	1
8	1	1	1	1	1	1	1
9	1	1	1	1	1	2	1
10	1	1	1	1	2	2	1
11	2	1	1	1	2	2	2
12	2	1	1	1	2	2	2
13	2	1	1	1	2	2	2
14	2	1	1	2	2	2	2
15	2	1	2	2	2	2	2
16	2	2	2	2	2	1	2
17	2	1	1	2	2	1	2
18	1	1	1	1	2	1	2
19	1	1	1	1	2	1	2
20	1	1	1	1	2	1	2
21	1	1	1	1	1	1	1
22	1	1	1	1	1	1	1
23	1	1	1	1	1	1	1

SUMMER SEASON MAY 21 THRU SEPTEMBER 15

HR/DAY	MON	TUES	WEDS	THUR	FRI	SAT	SUN
0	1	1	1	1	1	1	1
1	1	1	1	1	1	1	1
2	1	1	1	1	1	1	1
3	1	1	1	1	1	1	1
4	1	1	1	1	1	1	1
5	1	1	1	1	1	1	1
6	1	1	1	1	1	1	1
7	1	1	1	1	1	1	1
8	2	1	1	2	2	2	1
9	1	1	1	2	2	2	2
10	2	1	2	2	2	2	2
11	2	2	2	2	2	2	2
12	2	2	2	2	2	2	2
13	2	2	2	2	2	2	2
14	2	2	2	2	2	2	2
15	2	2	2	2	2	2	2
16	2	2	2	2	2	2	2
17	2	2	2	2	2	2	2
18	1	1	1	2	2	2	2
19	1	1	1	2	2	1	2
20	1	1	1	2	2	1	2
21	1	1	1	1	2	1	1
22	1	1	1	1	2	1	1
23	1	1	1	1	1	1	1

LANES REQUIRED TO BE OPEN BY HOUR AND TIME OF DAY

FALL SEASON SEPTEMBER 16 THRU November 30

HR/DAY	MON	TUES	WEDS	THUR	FRI	SAT	SUN
0	1	1	1	1	1	1	1
1	1	1	1	1	1	1	1
2	1	1	1	1	1	1	1
3	1	1	1	1	1	1	1
4	1	1	1	1	1	1	1
5	1	1	1	1	1	1	1
6	1	1	1	1	1	1	1
7	1	1	1	1	1	1	1
8	1	1	1	1	1	1	1
9	1	1	1	1	1	2	1
10	1	1	1	2	2	2	2
11	2	1	1	2	2	2	2
12	2	1	2	2	2	2	2
13	2	1	2	2	2	2	2
14	2	2	2	2	2	2	2
15	2	2	2	2	2	2	2
16	2	2	2	2	2	2	2
17	2	2	2	2	2	2	2
18	1	1	1	1	2	1	2
19	1	1	1	1	2	1	2
20	1	1	1	1	2	1	1
21	1	1	1	1	2	1	1
22	1	1	1	1	1	1	1
23	1	1	1	1	1	1	1

WINTER SEAS. DECEMBER 1 THRU February 28

HR/DAY	MON	TUES	WEDS	THUR	FRI	SAT	SUN
0	1	1	1	1	1	1	1
1	1	1	1	1	1	1	1
2	1	1	1	1	1	1	1
3	1	1	1	1	1	1	1
4	1	1	1	1	1	1	1
5	1	1	1	1	1	1	1
6	1	1	1	1	1	1	1
7	1	1	1	1	1	1	1
8	1	1	1	1	1	2	1
9	1	1	1	1	1	2	1
10	1	1	1	1	2	2	1
11	2	1	2	2	2	2	2
12	2	1	2	2	2	2	2
13	2	1	2	2	2	2	2
14	2	2	2	2	2	2	2
15	2	2	2	2	2	2	2
16	2	2	2	2	2	2	2
17	2	1	2	2	2	1	2
18	1	1	1	1	2	1	1
19	1	1	1	1	2	1	1
20	1	1	1	1	2	1	1
21	1	1	1	1	2	1	1
22	1	1	1	1	2	1	1
23	1	1	1	1	1	1	1

I-87 SOUTHBOUND INTERCHANGES 20 TO 19 (1,300 VEH/HR/LANE)

LANES REQUIRED TO BE OPEN BY HOUR AND TIME OF DAY

SPRING SEASON MARCH 1 THRU MAY 20

HR/DAY	MON	TUES	WEDS	THUR	FRI	SAT	SUN
0	1	1	1	1	1	1	1
1	1	1	1	1	1	1	1
2	1	1	1	1	1	1	1
3	1	1	1	1	1	1	1
4	1	1	1	1	1	1	1
5	1	1	1	1	1	1	1
6	1	1	1	1	1	1	1
7	1	1	1	1	1	1	1
8	1	1	1	1	1	1	1
9	1	1	1	1	2	2	1
10	2	1	1	1	2	2	2
11	1	1	1	1	2	2	2
12	1	1	1	1	2	2	2
13	1	1	1	1	2	2	2
14	1	1	1	2	2	2	2
15	1	1	2	2	2	2	2
16	1	1	2	2	2	2	2
17	1	1	1	2	2	2	2
18	1	1	1	1	2	1	2
19	1	1	1	1	1	1	2
20	1	1	1	1	1	1	2
21	1	1	1	1	1	1	1
22	1	1	1	1	1	1	1
23	1	1	1	1	1	1	1

SUMMER SEASON MAY 21 THRU SEPTEMBER 15

HR/DAY	MON	TUES	WEDS	THUR	FRI	SAT	SUN
0	1	1	1	1	1	1	1
1	1	1	1	1	1	1	1
2	1	1	1	1	1	1	1
3	1	1	1	1	1	1	1
4	1	1	1	1	1	1	1
5	1	1	1	1	1	1	1
6	1	1	1	1	1	1	1
7	2	1	1	1	1	1	1
8	2	2	2	2	2	1	1
9	2	1	1	2	2	2	2
10	2	2	2	2	2	2	2
11	2	2	2	2	2	2	2
12	2	2	2	2	2	2	2
13	2	2	2	2	2	2	2
14	2	2	2	2	2	2	2
15	2	2	2	2	2	2	2
16	2	2	2	2	2	2	2
17	2	2	2	2	2	2	2
18	2	1	2	2	2	2	2
19	2	1	1	1	2	2	2
20	2	1	1	1	1	1	2
21	1	1	1	1	1	1	2
22	1	1	1	1	1	1	1
23	1	1	1	1	1	1	1

LANES REQUIRED TO BE OPEN BY HOUR AND TIME OF DAY

FALL SEASON SEPTEMBER 16 THRU November 30

HR/DAY	MON	TUES	WEDS	THUR	FRI	SAT	SUN
0	1	1	1	1	1	1	1
1	1	1	1	1	1	1	1
2	1	1	1	1	1	1	1
3	1	1	1	1	1	1	1
4	1	1	1	1	1	1	1
5	1	1	1	1	1	1	1
6	1	1	1	1	1	1	1
7	1	1	1	1	1	1	1
8	1	1	1	1	1	1	1
9	2	1	1	2	1	2	2
10	2	1	1	2	2	2	2
11	2	1	1	2	2	2	2
12	2	1	2	2	2	2	2
13	2	1	2	2	2	2	2
14	2	2	2	2	2	2	2
15	2	2	2	2	2	2	2
16	2	2	2	2	2	2	2
17	2	2	2	2	2	2	2
18	2	1	1	1	2	2	2
19	1	1	1	1	2	1	2
20	1	1	1	1	1	1	2
21	1	1	1	1	1	1	1
22	1	1	1	1	1	1	1
23	1	1	1	1	1	1	1

WINTER SEAS. DECEMBER 1 THRU February 28

HR/DAY	MON	TUES	WEDS	THUR	FRI	SAT	SUN
0	1	1	1	1	1	1	1
1	1	1	1	1	1	1	1
2	1	1	1	1	1	1	1
3	1	1	1	1	1	1	1
4	1	1	1	1	1	1	1
5	1	1	1	1	1	1	1
6	1	1	1	1	1	1	1
7	1	1	1	1	1	1	1
8	1	1	1	1	1	1	1
9	1	1	1	1	1	2	1
10	2	1	2	1	2	2	2
11	2	2	2	1	2	2	2
12	2	2	2	1	2	2	2
13	2	2	2	1	2	2	2
14	2	2	2	1	2	2	2
15	2	2	2	2	2	2	2
16	2	2	2	2	2	2	2
17	2	2	2	2	2	2	2
18	2	1	1	1	2	1	2
19	1	1	1	1	1	1	2
20	1	1	1	1	1	1	1
21	1	1	1	1	1	1	1
22	1	1	1	1	1	1	1
23	1	1	1	1	1	1	1

NOTES:

1) THE NEW YORK STATE THRUWAY IS A LIMITED ACCESS, HIGH-SPEED, HIGH-VOLUME HIGHWAY. TRAFFIC SHALL BE MAINTAINED IN ACCORDANCE WITH THE *MANUAL ON UNIFORM TRAFFIC CONTROL DEVICES (MUTCD)*, THE *WORK ZONE TRAFFIC CONTROL PLANS*, AND THE *STANDARD SPECIFICATIONS* SECTION 619 AS AMENDED BY THE AUTHORITY.

2) LANE CLOSURES ON THE THRUWAY SHALL ONLY BE ALLOWED IN ACCORDANCE WITH THESE TRAFFIC MANAGEMENT TABLE(S), UNLESS INDICATED OTHERWISE IN THE CONTRACT PLANS OR PROPOSAL DOCUMENTS.

3) LANE CLOSURE CHARTS SHALL APPLY AS FOLLOWS:

- 1,150 VEH/HR/LANE: APPLIES TO ALL WORK REQUIRING LANE CLOSURE(S) EXCEPT AS PERMITTED BELOW.

- 1,300 VEH/HR/LANE: APPLIES TO NON-EVASIVE WORK WHERE WORKERS AND/OR EQUIPMENT ARE LOCATED 4 FT. OR MORE FROM TRAVEL (SPACE) LANE, OR AS APPROVED BY THE THRUWAY PROJECT ENGINEER. WORK SHOULD BE ABLE TO BE IMMEDIATELY STOPPED AND LANE CLOSURE(S) REMOVED IN THE EVENT QUEUES, GREATER THAN 1 MILE, DEVELOP.

NEW YORK STATE OF OPPORTUNITY. Thruway Authority

U.S. CUSTOMARY STANDARD SHEET

LANE CLOSURE CHARTS
1,300 VEHICLES PER HOUR
ALBANY DIVISION
(SHEET 2 OF 18)

APPROVED SEPTEMBER 1, 2018

/S/ PATRICK THOMPSON, P.E.
DIRECTOR DESIGN SUPPORT
SERVICES BUREAU

ISSUED UNDER DB 18-003

TA 619-35

I-87 NORTHBOUND INTERCHANGES 20 TO 21 (1,300 VEH/HR/LANE)

LANES REQUIRED TO BE OPEN BY HOUR AND TIME OF DAY

SPRING SEASON MARCH 1 THRU MAY 20

HR/DAY	MON	TUES	WEDS	THUR	FRI	SAT	SUN
0	1	1	1	1	1	1	1
1	1	1	1	1	1	1	1
2	1	1	1	1	1	1	1
3	1	1	1	1	1	1	1
4	1	1	1	1	1	1	1
5	1	1	1	1	1	1	1
6	2	2	2	2	2	1	1
7	2	2	2	2	2	1	1
8	2	2	2	2	2	2	1
9	2	2	2	2	2	2	2
10	2	2	2	2	2	2	2
11	2	2	2	2	2	2	2
12	2	2	2	2	2	2	2
13	2	2	2	2	2	2	2
14	2	2	2	2	2	2	2
15	2	2	2	2	2	2	2
16	2	2	2	2	2	2	2
17	2	2	2	2	2	2	2
18	2	2	2	2	2	2	2
19	2	2	2	2	2	2	2
20	2	1	2	2	2	2	2
21	1	1	1	1	2	2	1
22	1	1	1	1	1	2	1
23	1	1	1	1	1	1	1

SUMMER SEASON MAY 21 THRU SEPTEMBER 15

HR/DAY	MON	TUES	WEDS	THUR	FRI	SAT	SUN
0	1	1	1	1	1	1	1
1	1	1	1	1	1	1	1
2	1	1	1	1	1	1	1
3	1	1	1	1	1	1	1
4	1	1	1	1	1	1	1
5	1	1	1	1	1	1	1
6	2	2	2	2	2	1	1
7	2	2	2	2	2	1	1
8	2	2	2	2	2	2	1
9	2	2	2	2	2	2	2
10	2	2	2	2	2	2	2
11	2	2	2	2	2	2	2
12	2	2	2	2	2	2	2
13	2	2	2	2	2	2	2
14	2	2	2	2	2	2	2
15	2	2	2	2	2	2	2
16	2	2	2	2	2	2	2
17	2	2	2	2	2	2	2
18	2	2	2	2	2	2	2
19	2	2	2	2	2	2	2
20	2	2	2	2	2	2	2
21	1	1	1	2	2	2	2
22	1	1	1	1	2	1	1
23	1	1	1	1	1	1	1

LANES REQUIRED TO BE OPEN BY HOUR AND TIME OF DAY

FALL SEASON SEPTEMBER 16 THRU November 30

HR/DAY	MON	TUES	WEDS	THUR	FRI	SAT	SUN
0	1	1	1	1	1	1	1
1	1	1	1	1	1	1	1
2	1	1	1	1	1	1	1
3	1	1	1	1	1	1	1
4	1	1	1	1	1	1	1
5	1	1	1	1	1	1	1
6	2	2	2	2	2	1	1
7	2	2	2	2	2	1	1
8	2	2	2	2	2	2	1
9	2	2	2	2	2	2	2
10	2	2	2	2	2	2	2
11	2	2	2	2	2	2	2
12	2	2	2	2	2	2	2
13	2	2	2	2	2	2	2
14	2	2	2	2	2	2	2
15	2	2	2	2	2	2	2
16	2	2	2	2	2	2	2
17	2	2	2	2	2	2	2
18	2	2	2	2	2	2	2
19	2	2	2	2	2	2	2
20	1	1	1	2	2	2	1
21	1	1	1	1	2	1	1
22	1	1	1	1	1	1	1
23	1	1	1	1	1	1	1

WINTER SEAS. DECEMBER 1 THRU February 28

HR/DAY	MON	TUES	WEDS	THUR	FRI	SAT	SUN
0	1	1	1	1	1	1	1
1	1	1	1	1	1	1	1
2	1	1	1	1	1	1	1
3	1	1	1	1	1	1	1
4	1	1	1	1	1	1	1
5	1	1	1	1	1	1	1
6	2	2	2	2	2	1	1
7	2	2	2	2	2	1	1
8	2	2	2	2	2	1	1
9	2	2	2	2	2	2	1
10	2	2	2	2	2	2	2
11	2	2	2	2	2	2	2
12	2	2	2	2	2	2	2
13	2	2	2	2	2	2	2
14	2	2	2	2	2	2	2
15	2	2	2	2	2	2	2
16	2	2	2	2	2	2	2
17	2	2	2	2	2	2	2
18	2	2	2	2	2	2	2
19	2	2	2	2	2	2	2
20	1	1	1	1	2	1	1
21	1	1	1	1	1	1	1
22	1	1	1	1	1	1	1
23	1	1	1	1	1	1	1

I-87 SOUTHBOUND INTERCHANGES 21 TO 20 (1,300 VEH/HR/LANE)

LANES REQUIRED TO BE OPEN BY HOUR AND TIME OF DAY

SPRING SEASON MARCH 1 THRU MAY 20

HR/DAY	MON	TUES	WEDS	THUR	FRI	SAT	SUN
0	1	1	1	1	1	1	1
1	1	1	1	1	1	1	1
2	1	1	1	1	1	1	1
3	1	1	1	1	1	1	1
4	1	1	1	1	1	1	1
5	1	1	1	1	1	1	1
6	2	2	2	2	2	1	1
7	2	2	2	2	2	1	1
8	2	2	2	2	2	2	1
9	2	2	2	2	2	2	2
10	2	2	2	2	2	2	2
11	2	2	2	2	2	2	2
12	2	2	2	2	2	2	2
13	2	2	2	2	2	2	2
14	2	2	2	2	2	2	2
15	2	2	2	2	2	2	2
16	2	2	2	2	2	2	2
17	2	2	2	2	2	2	2
18	2	2	2	2	2	2	2
19	2	2	2	2	2	2	2
20	1	1	2	2	2	2	2
21	1	1	1	1	2	2	1
22	1	1	1	1	2	2	1
23	1	1	1	1	1	1	1

SUMMER SEASON MAY 21 THRU SEPTEMBER 15

HR/DAY	MON	TUES	WEDS	THUR	FRI	SAT	SUN
0	1	1	1	1	1	1	1
1	1	1	1	1	1	1	1
2	1	1	1	1	1	1	1
3	1	1	1	1	1	1	1
4	1	1	1	1	1	1	1
5	1	1	1	1	1	1	1
6	2	2	2	2	2	1	1
7	2	2	2	2	2	1	1
8	2	2	2	2	2	2	1
9	2	2	2	2	2	2	2
10	2	2	2	2	2	2	2
11	2	2	2	2	2	2	2
12	2	2	2	2	2	2	2
13	2	2	2	2	2	2	2
14	2	2	2	2	2	2	2
15	2	2	2	2	2	2	2
16	2	2	2	2	2	2	2
17	2	2	2	2	2	2	2
18	2	2	2	2	2	2	2
19	2	2	2	2	2	2	2
20	2	2	2	2	2	2	2
21	2	2	2	2	2	2	2
22	1	2	2	2	2	2	2
23	1	1	1	1	2	2	1

LANES REQUIRED TO BE OPEN BY HOUR AND TIME OF DAY

FALL SEASON SEPTEMBER 16 THRU November 30

HR/DAY	MON	TUES	WEDS	THUR	FRI	SAT	SUN
0	1	1	1	1	1	1	1
1	1	1	1	1	1	1	1
2	1	1	1	1	1	1	1
3	1	1	1	1	1	1	1
4	1	1	1	1	1	1	1
5	1	1	1	1	1	1	1
6	2	2	2	2	2	1	1
7	2	2	2	2	2	1	1
8	2	2	2	2	2	2	1
9	2	2	2	2	2	2	2
10	2	2	2	2	2	2	2
11	2	2	2	2	2	2	2
12	2	2	2	2	2	2	2
13	2	2	2	2	2	2	2
14	2	2	2	2	2	2	2
15	2	2	2	2	2	2	2
16	2	2	2	2	2	2	2
17	2	2	2	2	2	2	2
18	2	2	2	2	2	2	2
19	2	2	2	2	2	2	2
20	1	1	1	2	2	2	1
21	1	1	1	1	2	2	1
22	1	1	1	1	2	2	1
23	1	1	1	1	1	1	1

WINTER SEAS. DECEMBER 1 THRU February 28

HR/DAY	MON	TUES	WEDS	THUR	FRI	SAT	SUN
0	1	1	1	1	1	1	1
1	1	1	1	1	1	1	1
2	1	1	1	1	1	1	1
3	1	1	1	1	1	1	1
4	1	1	1	1	1	1	1
5	1	1	1	1	1	1	1
6	2	2	2	2	2	1	1
7	2	2	2	2	2	1	1
8	2	2	2	2	2	1	1
9	2	2	2	2	2	2	1
10	2	2	2	2	2	2	2
11	2	2	2	2	2	2	2
12	2	2	2	2	2	2	2
13	2	2	2	2	2	2	2
14	2	2	2	2	2	2	2
15	2	2	2	2	2	2	2
16	2	2	2	2	2	2	2
17	2	2	2	2	2	2	2
18	2	2	2	2	2	2	2
19	2	2	2	2	2	2	2
20	1	1	1	1	2	2	1
21	1	1	1	1	2	2	1
22	1	1	1	1	1	1	1
23	1	1	1	1	1	1	1

NOTES:

1) THE NEW YORK STATE THRUWAY IS A LIMITED ACCESS, HIGH-SPEED, HIGH-VOLUME HIGHWAY. TRAFFIC SHALL BE MAINTAINED IN ACCORDANCE WITH THE *MANUAL ON UNIFORM TRAFFIC CONTROL DEVICES (MUTCD)*, THE *WORK ZONE TRAFFIC CONTROL PLANS*, AND THE *STANDARD SPECIFICATIONS* SECTION 619 AS AMENDED BY THE AUTHORITY.

2) LANE CLOSURES ON THE THRUWAY SHALL ONLY BE ALLOWED IN ACCORDANCE WITH THESE TRAFFIC MANAGEMENT TABLE(S), UNLESS INDICATED OTHERWISE IN THE CONTRACT PLANS OR PROPOSAL DOCUMENTS.

3) LANE CLOSURE CHARTS SHALL APPLY AS FOLLOWS:

- 1,150 VEH/HR/LANE: APPLIES TO ALL WORK REQUIRING LANE CLOSURE(S) EXCEPT AS PERMITTED BELOW.

- 1,300 VEH/HR/LANE: APPLIES TO NON-EVASIVE WORK WHERE WORKERS AND/OR EQUIPMENT ARE LOCATED 4 FT. OR MORE FROM TRAVEL (SPACE) LANE, OR AS APPROVED BY THE THRUWAY PROJECT ENGINEER. WORK SHOULD BE ABLE TO BE IMMEDIATELY STOPPED AND LANE CLOSURE(S) REMOVED IN THE EVENT QUEUES, GREATER THAN 1 MILE, DEVELOP.

NEW YORK STATE OF OPPORTUNITY. Thruway Authority

U.S. CUSTOMARY STANDARD SHEET

LANE CLOSURE CHARTS
1,300 VEHICLES PER HOUR
ALBANY DIVISION
(SHEET 3 OF 18)

APPROVED SEPTEMBER 1, 2018

/S/ PATRICK THOMPSON, P.E.
DIRECTOR DESIGN SUPPORT
SERVICES BUREAU

ISSUED UNDER DB 18-003

TA 619-35

I-87 NORTHBOUND INTERCHANGES 21 TO 21B (1,300 VEH/HR/LANE)

LANES REQUIRED TO BE OPEN BY HOUR AND TIME OF DAY

SPRING SEASON MARCH 1 THRU MAY 20

HR/DAY	MON	TUES	WEDS	THUR	FRI	SAT	SUN
0	1	1	1	1	1	1	1
1	1	1	1	1	1	1	1
2	1	1	1	1	1	1	1
3	1	1	1	1	1	1	1
4	1	1	1	1	1	1	1
5	1	1	1	1	1	1	1
6	1	1	1	1	1	1	1
7	1	1	1	1	1	1	1
8	1	1	1	1	1	1	1
9	1	1	1	1	1	1	1
10	1	1	1	1	1	2	1
11	1	1	1	1	2	2	1
12	2	1	1	1	2	2	2
13	2	1	1	1	2	1	2
14	2	1	1	2	2	1	2
15	2	1	1	2	2	1	2
16	2	1	1	2	2	1	2
17	2	1	1	2	2	1	2
18	1	1	1	1	2	1	2
19	1	1	1	1	2	1	2
20	1	1	1	1	2	1	2
21	1	1	1	1	1	1	1
22	1	1	1	1	1	1	1
23	1	1	1	1	1	1	1

SUMMER SEASON MAY 21 THRU SEPTEMBER 15

HR/DAY	MON	TUES	WEDS	THUR	FRI	SAT	SUN
0	1	1	1	1	1	1	1
1	1	1	1	1	1	1	1
2	1	1	1	1	1	1	1
3	1	1	1	1	1	1	1
4	1	1	1	1	1	1	1
5	1	1	1	1	1	1	1
6	1	1	1	1	1	1	1
7	2	1	1	1	1	1	1
8	2	1	1	2	2	2	1
9	1	1	1	2	2	2	1
10	2	1	2	2	2	2	2
11	2	1	2	2	2	2	2
12	2	2	2	2	2	2	2
13	2	2	2	2	2	2	2
14	2	2	2	2	2	2	2
15	2	2	2	2	2	2	2
16	2	2	2	2	2	2	2
17	2	1	2	2	2	2	2
18	1	1	1	2	2	1	2
19	1	1	1	1	2	1	2
20	1	1	1	1	2	1	2
21	1	1	1	1	2	1	1
22	1	1	1	1	1	1	1
23	1	1	1	1	1	1	1

LANES REQUIRED TO BE OPEN BY HOUR AND TIME OF DAY

FALL SEASON SEPTEMBER 16 THRU November 30

HR/DAY	MON	TUES	WEDS	THUR	FRI	SAT	SUN
0	1	1	1	1	1	1	1
1	1	1	1	1	1	1	1
2	1	1	1	1	1	1	1
3	1	1	1	1	1	1	1
4	1	1	1	1	1	1	1
5	1	1	1	1	1	1	1
6	1	1	1	1	1	1	1
7	1	1	1	1	1	1	1
8	1	1	1	1	1	1	1
9	1	1	1	1	1	1	1
10	1	1	1	2	2	2	1
11	2	1	1	2	2	2	2
12	2	1	1	2	2	2	2
13	2	1	1	2	2	2	2
14	2	1	2	2	2	2	2
15	2	2	2	2	2	2	2
16	2	2	2	2	2	2	2
17	2	1	1	2	2	1	2
18	1	1	1	1	2	1	2
19	1	1	1	1	2	1	2
20	1	1	1	1	2	1	1
21	1	1	1	1	1	1	1
22	1	1	1	1	1	1	1
23	1	1	1	1	1	1	1

WINTER SEAS. DECEMBER 1 THRU February 28

HR/DAY	MON	TUES	WEDS	THUR	FRI	SAT	SUN
0	1	1	1	1	1	1	1
1	1	1	1	1	1	1	1
2	1	1	1	1	1	1	1
3	1	1	1	1	1	1	1
4	1	1	1	1	1	1	1
5	1	1	1	1	1	1	1
6	1	1	1	1	1	1	1
7	1	1	1	1	1	1	1
8	1	1	1	1	1	1	1
9	1	1	1	1	1	1	1
10	1	1	1	1	1	2	1
11	1	1	1	1	2	2	1
12	2	1	2	2	2	2	2
13	2	1	2	2	2	2	2
14	2	1	2	2	2	2	2
15	2	1	2	2	2	2	2
16	2	1	2	2	2	1	2
17	1	1	1	2	2	1	1
18	1	1	1	1	2	1	1
19	1	1	1	1	2	1	1
20	1	1	1	1	2	1	1
21	1	1	1	1	2	1	1
22	1	1	1	1	1	1	1
23	1	1	1	1	1	1	1

I-87: SOUTHBOUND INTERCHANGES 21B TO 21 (1,300 VEH/HR/LANE)

LANES REQUIRED TO BE OPEN BY HOUR AND TIME OF DAY

SPRING SEASON MARCH 1 THRU MAY 20

HR/DAY	MON	TUES	WEDS	THUR	FRI	SAT	SUN
0	1	1	1	1	1	1	1
1	1	1	1	1	1	1	1
2	1	1	1	1	1	1	1
3	1	1	1	1	1	1	1
4	1	1	1	1	1	1	1
5	1	1	1	1	1	1	1
6	1	1	1	1	1	1	1
7	1	1	1	1	1	1	1
8	1	1	1	1	1	1	1
9	1	1	1	1	1	1	1
10	1	1	1	1	2	2	1
11	1	1	1	1	2	2	2
12	1	1	1	1	2	2	2
13	1	1	1	1	2	2	2
14	1	1	1	2	2	2	2
15	1	1	1	2	2	2	2
16	2	2	2	2	2	1	2
17	1	1	1	2	2	1	2
18	1	1	1	1	2	1	2
19	1	1	1	1	1	1	2
20	1	1	1	1	1	1	1
21	1	1	1	1	1	1	1
22	1	1	1	1	1	1	1
23	1	1	1	1	1	1	1

SUMMER SEASON MAY 21 THRU SEPTEMBER 15

HR/DAY	MON	TUES	WEDS	THUR	FRI	SAT	SUN
0	1	1	1	1	1	1	1
1	1	1	1	1	1	1	1
2	1	1	1	1	1	1	1
3	1	1	1	1	1	1	1
4	1	1	1	1	1	1	1
5	1	1	1	1	1	1	1
6	1	1	1	1	1	1	1
7	1	1	1	1	1	1	1
8	1	1	1	1	1	2	1
9	2	1	1	1	2	2	2
10	2	2	1	2	2	2	2
11	2	2	1	2	2	2	2
12	2	2	1	2	2	2	2
13	2	2	2	2	2	2	2
14	2	2	2	2	2	2	2
15	2	2	2	2	2	2	2
16	2	2	2	2	2	2	2
17	2	2	2	2	2	2	2
18	2	1	1	2	2	1	2
19	2	1	1	1	2	1	2
20	1	1	1	1	1	1	2
21	1	1	1	1	1	1	1
22	1	1	1	1	1	1	1
23	1	1	1	1	1	1	1

LANES REQUIRED TO BE OPEN BY HOUR AND TIME OF DAY

FALL SEASON SEPTEMBER 16 THRU November 30

HR/DAY	MON	TUES	WEDS	THUR	FRI	SAT	SUN
0	1	1	1	1	1	1	1
1	1	1	1	1	1	1	1
2	1	1	1	1	1	1	1
3	1	1	1	1	1	1	1
4	1	1	1	1	1	1	1
5	1	1	1	1	1	1	1
6	1	1	1	1	1	1	1
7	1	1	1	1	1	1	1
8	1	1	1	1	1	1	1
9	1	1	1	1	1	2	1
10	2	1	1	2	2	2	2
11	2	1	1	2	2	2	2
12	2	1	1	2	2	2	2
13	2	1	2	1	2	2	2
14	2	2	2	1	2	2	2
15	2	2	2	2	2	2	2
16	2	2	2	2	2	2	2
17	2	2	2	2	2	2	2
18	1	1	1	1	2	1	2
19	1	1	1	1	1	1	2
20	1	1	1	1	1	1	1
21	1	1	1	1	1	1	1
22	1	1	1	1	1	1	1
23	1	1	1	1	1	1	1

WINTER SEAS. DECEMBER 1 THRU February 28

HR/DAY	MON	TUES	WEDS	THUR	FRI	SAT	SUN
0	1	1	1	1	1	1	1
1	1	1	1	1	1	1	1
2	1	1	1	1	1	1	1
3	1	1	1	1	1	1	1
4	1	1	1	1	1	1	1
5	1	1	1	1	1	1	1
6	1	1	1	1	1	1	1
7	1	1	1	1	1	1	1
8	1	1	1	1	1	1	1
9	1	1	1	1	1	1	1
10	2	1	1	1	1	2	1
11	2	1	2	1	2	2	2
12	2	2	2	1	2	2	2
13	2	2	2	1	2	2	2
14	2	2	2	2	2	2	2
15	2	2	2	2	2	2	2
16	2	2	2	2	2	1	2
17	2	2	2	2	2	1	2
18	2	1	1	1	2	1	2
19	1	1	1	1	1	1	1
20	1	1	1	1	1	1	1
21	1	1	1	1	1	1	1
22	1	1	1	1	1	1	1
23	1	1	1	1	1	1	1

NOTES:

1) THE NEW YORK STATE THRUWAY IS A LIMITED ACCESS, HIGH-SPEED, HIGH-VOLUME HIGHWAY. TRAFFIC SHALL BE MAINTAINED IN ACCORDANCE WITH THE *MANUAL ON UNIFORM TRAFFIC CONTROL DEVICES (MUTCD)*, THE *WORK ZONE TRAFFIC CONTROL PLANS*, AND THE *STANDARD SPECIFICATIONS* SECTION 619 AS AMENDED BY THE AUTHORITY.

2) LANE CLOSURES ON THE THRUWAY SHALL ONLY BE ALLOWED IN ACCORDANCE WITH THESE TRAFFIC MANAGEMENT TABLE(S), UNLESS INDICATED OTHERWISE IN THE CONTRACT PLANS OR PROPOSAL DOCUMENTS.

3) LANE CLOSURE CHARTS SHALL APPLY AS FOLLOWS:

- 1,150 VEH/HR/LANE: APPLIES TO ALL WORK REQUIRING LANE CLOSURE(S) EXCEPT AS PERMITTED BELOW.

- 1,300 VEH/HR/LANE: APPLIES TO NON-EVASIVE WORK WHERE WORKERS AND/OR EQUIPMENT ARE LOCATED 4 FT. OR MORE FROM TRAVEL (SPACE) LANE, OR AS APPROVED BY THE THRUWAY PROJECT ENGINEER. WORK SHOULD BE ABLE TO BE IMMEDIATELY STOPPED AND LANE CLOSURE(S) REMOVED IN THE EVENT QUEUES, GREATER THAN 1 MILE, DEVELOP.

NEW YORK STATE OF OPPORTUNITY. Thruway Authority

U.S. CUSTOMARY STANDARD SHEET

LANE CLOSURE CHARTS
1,300 VEHICLES PER HOUR
ALBANY DIVISION
(SHEET 4 OF 18)

APPROVED SEPTEMBER 1, 2018

/S/ PATRICK THOMPSON, P.E.
DIRECTOR DESIGN SUPPORT
SERVICES BUREAU

ISSUED UNDER DB 18-003

TA 619-35

I-87 NORTHBOUND INTERCHANGES 21B TO 21A (1,300 VEH/HR/LANE)

LANES REQUIRED TO BE OPEN BY HOUR AND TIME OF DAY

SPRING SEASON MARCH 1 THRU MAY 20

HR/DAY	MON	TUES	WEDS	THUR	FRI	SAT	SUN
0	1	1	1	1	1	1	1
1	1	1	1	1	1	1	1
2	1	1	1	1	1	1	1
3	1	1	1	1	1	1	1
4	1	1	1	1	1	1	1
5	1	1	1	1	1	1	1
6	1	1	1	1	1	1	1
7	2	2	2	2	2	1	1
8	2	1	1	1	1	1	1
9	1	1	1	1	1	1	1
10	1	1	1	1	1	2	1
11	1	1	1	1	2	2	1
12	2	1	1	1	2	2	2
13	2	1	1	1	2	2	2
14	2	1	1	2	2	1	2
15	2	1	2	2	2	1	2
16	2	1	1	2	2	1	2
17	2	1	1	2	2	1	2
18	1	1	1	1	2	1	2
19	1	1	1	1	2	1	2
20	1	1	1	1	1	1	2
21	1	1	1	1	1	1	1
22	1	1	1	1	1	1	1
23	1	1	1	1	1	1	1

SUMMER SEASON MAY 21 THRU SEPTEMBER 15

HR/DAY	MON	TUES	WEDS	THUR	FRI	SAT	SUN
0	1	1	1	1	1	1	1
1	1	1	1	1	1	1	1
2	1	1	1	1	1	1	1
3	1	1	1	1	1	1	1
4	1	1	1	1	1	1	1
5	1	1	1	1	1	1	1
6	1	1	1	1	1	1	1
7	2	2	2	2	2	1	1
8	2	1	2	2	2	1	1
9	2	1	1	2	2	2	1
10	2	1	1	2	2	2	2
11	2	1	2	2	2	2	2
12	2	2	2	2	2	2	2
13	2	2	2	2	2	2	2
14	2	2	2	2	2	2	2
15	2	2	2	2	2	2	2
16	2	2	2	2	2	2	2
17	2	1	2	2	2	2	2
18	1	1	1	2	2	1	2
19	1	1	1	1	2	1	2
20	1	1	1	1	2	1	1
21	1	1	1	1	2	1	1
22	1	1	1	1	1	1	1
23	1	1	1	1	1	1	1

LANES REQUIRED TO BE OPEN BY HOUR AND TIME OF DAY

FALL SEASON SEPTEMBER 16 THRU November 30

HR/DAY	MON	TUES	WEDS	THUR	FRI	SAT	SUN
0	1	1	1	1	1	1	1
1	1	1	1	1	1	1	1
2	1	1	1	1	1	1	1
3	1	1	1	1	1	1	1
4	1	1	1	1	1	1	1
5	1	1	1	1	1	1	1
6	1	1	1	1	1	1	1
7	2	2	1	2	1	1	1
8	1	1	1	1	1	1	1
9	1	1	1	1	1	1	1
10	1	1	1	1	1	2	1
11	1	1	1	2	2	2	2
12	2	1	1	2	2	2	2
13	2	1	2	2	2	2	2
14	2	1	2	2	2	2	2
15	2	2	2	2	2	2	2
16	2	2	2	2	2	1	2
17	1	1	2	2	2	1	2
18	1	1	1	1	2	1	2
19	1	1	1	1	2	1	2
20	1	1	1	1	1	1	1
21	1	1	1	1	1	1	1
22	1	1	1	1	1	1	1
23	1	1	1	1	1	1	1

WINTER SEAS. DECEMBER 1 THRU February 28

HR/DAY	MON	TUES	WEDS	THUR	FRI	SAT	SUN
0	1	1	1	1	1	1	1
1	1	1	1	1	1	1	1
2	1	1	1	1	1	1	1
3	1	1	1	1	1	1	1
4	1	1	1	1	1	1	1
5	1	1	1	1	1	1	1
6	1	1	1	1	1	1	1
7	2	2	2	2	1	1	1
8	1	1	1	1	1	1	1
9	1	1	1	1	1	1	1
10	1	1	1	1	1	1	1
11	1	1	1	1	2	2	1
12	2	1	1	1	2	2	2
13	2	1	2	2	2	2	2
14	2	1	2	2	2	2	2
15	2	2	2	2	2	2	2
16	2	2	2	2	2	1	2
17	1	1	1	2	2	1	1
18	1	1	1	1	2	1	1
19	1	1	1	1	2	1	1
20	1	1	1	1	2	1	1
21	1	1	1	1	2	1	1
22	1	1	1	1	1	1	1
23	1	1	1	1	1	1	1

I-87 SOUTHBOUND INTERCHANGES 21A TO 21B (1,300 VEH/HR/LANE)

LANES REQUIRED TO BE OPEN BY HOUR AND TIME OF DAY

SPRING SEASON MARCH 1 THRU MAY 20

HR/DAY	MON	TUES	WEDS	THUR	FRI	SAT	SUN
0	1	1	1	1	1	1	1
1	1	1	1	1	1	1	1
2	1	1	1	1	1	1	1
3	1	1	1	1	1	1	1
4	1	1	1	1	1	1	1
5	1	1	1	1	1	1	1
6	1	1	1	1	1	1	1
7	1	1	1	1	1	1	1
8	1	1	1	1	1	1	1
9	1	1	1	1	2	2	1
10	1	1	1	1	2	2	2
11	1	1	1	1	2	2	2
12	1	1	1	1	2	2	2
13	1	1	1	1	2	2	2
14	1	1	1	2	2	2	2
15	1	2	2	2	2	2	2
16	2	2	2	2	2	2	2
17	2	2	2	2	2	1	2
18	1	1	1	1	2	1	2
19	1	1	1	1	1	1	2
20	1	1	1	1	1	1	1
21	1	1	1	1	1	1	1
22	1	1	1	1	1	1	1
23	1	1	1	1	1	1	1

SUMMER SEASON MAY 21 THRU SEPTEMBER 15

HR/DAY	MON	TUES	WEDS	THUR	FRI	SAT	SUN
0	1	1	1	1	1	1	1
1	1	1	1	1	1	1	1
2	1	1	1	1	1	1	1
3	1	1	1	1	1	1	1
4	1	1	1	1	1	1	1
5	1	1	1	1	1	1	1
6	1	1	1	1	1	1	1
7	1	1	1	1	1	1	1
8	1	1	1	1	1	2	1
9	2	1	1	1	2	2	2
10	2	2	1	2	2	2	2
11	2	2	2	2	2	2	2
12	2	2	2	2	2	2	2
13	2	2	2	2	2	2	2
14	2	2	2	2	2	2	2
15	2	2	2	2	2	2	2
16	2	2	2	2	2	2	2
17	2	2	2	2	2	2	2
18	2	1	1	2	2	1	2
19	2	1	1	1	2	1	2
20	1	1	1	1	1	1	2
21	1	1	1	1	1	1	1
22	1	1	1	1	1	1	1
23	1	1	1	1	1	1	1

LANES REQUIRED TO BE OPEN BY HOUR AND TIME OF DAY

FALL SEASON SEPTEMBER 16 THRU November 30

HR/DAY	MON	TUES	WEDS	THUR	FRI	SAT	SUN
0	1	1	1	1	1	1	1
1	1	1	1	1	1	1	1
2	1	1	1	1	1	1	1
3	1	1	1	1	1	1	1
4	1	1	1	1	1	1	1
5	1	1	1	1	1	1	1
6	1	1	1	1	1	1	1
7	1	1	1	1	1	1	1
8	1	1	1	1	1	1	1
9	1	1	1	1	1	2	2
10	2	1	1	2	2	2	2
11	2	1	1	2	2	2	2
12	2	2	2	2	2	2	2
13	2	2	2	1	2	2	2
14	2	2	2	1	2	2	2
15	2	2	2	2	2	2	2
16	2	2	2	2	2	2	2
17	2	2	2	2	2	2	2
18	1	2	1	1	2	1	2
19	1	1	1	1	1	1	2
20	1	1	1	1	1	1	1
21	1	1	1	1	1	1	1
22	1	1	1	1	1	1	1
23	1	1	1	1	1	1	1

WINTER SEAS. DECEMBER 1 THRU February 28

HR/DAY	MON	TUES	WEDS	THUR	FRI	SAT	SUN
0	1	1	1	1	1	1	1
1	1	1	1	1	1	1	1
2	1	1	1	1	1	1	1
3	1	1	1	1	1	1	1
4	1	1	1	1	1	1	1
5	1	1	1	1	1	1	1
6	1	1	1	1	1	1	1
7	1	1	1	1	1	1	1
8	1	1	1	1	1	1	1
9	1	1	1	1	1	1	1
10	2	1	1	1	1	2	1
11	2	1	2	1	2	2	2
12	2	2	2	1	2	2	2
13	2	2	2	2	2	2	2
14	2	2	2	2	2	2	2
15	2	2	2	2	2	2	2
16	2	2	2	2	2	1	2
17	2	2	2	2	2	1	2
18	2	1	1	1	2	1	2
19	1	1	1	1	1	1	1
20	1	1	1	1	1	1	1
21	1	1	1	1	1	1	1
22	1	1	1	1	1	1	1
23	1	1	1	1	1	1	1

NOTES:

1) THE NEW YORK STATE THRUWAY IS A LIMITED ACCESS, HIGH-SPEED, HIGH-VOLUME HIGHWAY. TRAFFIC SHALL BE MAINTAINED IN ACCORDANCE WITH THE *MANUAL ON UNIFORM TRAFFIC CONTROL DEVICES (MUTCD)*, THE *WORK ZONE TRAFFIC CONTROL PLANS*, AND THE *STANDARD SPECIFICATIONS* SECTION 619 AS AMENDED BY THE AUTHORITY.

2) LANE CLOSURES ON THE THRUWAY SHALL ONLY BE ALLOWED IN ACCORDANCE WITH THESE TRAFFIC MANAGEMENT TABLE(S), UNLESS INDICATED OTHERWISE IN THE CONTRACT PLANS OR PROPOSAL DOCUMENTS.

3) LANE CLOSURE CHARTS SHALL APPLY AS FOLLOWS:

- 1,150 VEH/HR/LANE: APPLIES TO ALL WORK REQUIRING LANE CLOSURE(S) EXCEPT AS PERMITTED BELOW.

- 1,300 VEH/HR/LANE: APPLIES TO NON-EVASIVE WORK WHERE WORKERS AND/OR EQUIPMENT ARE LOCATED 4 FT. OR MORE FROM TRAVEL (SPACE) LANE, OR AS APPROVED BY THE THRUWAY PROJECT ENGINEER. WORK SHOULD BE ABLE TO BE IMMEDIATELY STOPPED AND LANE CLOSURE(S) REMOVED IN THE EVENT QUEUES, GREATER THAN 1 MILE, DEVELOP.

NEW YORK STATE OF OPPORTUNITY. Thruway Authority

U.S. CUSTOMARY STANDARD SHEET

LANE CLOSURE CHARTS
1,300 VEHICLES PER HOUR
ALBANY DIVISION
(SHEET 5 OF 18)

APPROVED SEPTEMBER 1, 2018

/S/ PATRICK THOMPSON, P.E.
DIRECTOR DESIGN SUPPORT
SERVICES BUREAU

ISSUED UNDER DB 18-003

TA 619-35

I-87 NORTHBOUND INTERCHANGES 21A TO 22 (1,300 VEH/HR/LANE)

LANES REQUIRED TO BE OPEN BY HOUR AND TIME OF DAY

SPRING SEASON MARCH 1 THRU MAY 20

HR/DAY	MON	TUES	WEDS	THUR	FRI	SAT	SUN
0	1	1	1	1	1	1	1
1	1	1	1	1	1	1	1
2	1	1	1	1	1	1	1
3	1	1	1	1	1	1	1
4	1	1	1	1	1	1	1
5	1	1	1	1	1	1	1
6	1	1	1	1	1	1	1
7	2	2	2	2	2	1	1
8	2	2	2	2	2	1	1
9	2	1	1	2	2	2	1
10	2	1	1	1	2	2	1
11	2	2	1	2	2	2	2
12	2	2	2	2	2	2	2
13	2	2	2	2	2	2	2
14	2	2	2	2	2	2	2
15	2	2	2	2	2	2	2
16	2	2	2	2	2	2	2
17	2	2	2	2	2	2	2
18	2	1	1	2	2	1	2
19	1	1	1	1	2	1	2
20	1	1	1	1	2	1	2
21	1	1	1	1	1	1	1
22	1	1	1	1	1	1	1
23	1	1	1	1	1	1	1

SUMMER SEASON MAY 21 THRU SEPTEMBER 15

HR/DAY	MON	TUES	WEDS	THUR	FRI	SAT	SUN
0	1	1	1	1	1	1	1
1	1	1	1	1	1	1	1
2	1	1	1	1	1	1	1
3	1	1	1	1	1	1	1
4	1	1	1	1	1	1	1
5	1	1	1	1	1	1	1
6	1	1	1	1	1	1	1
7	2	2	2	2	2	1	1
8	2	2	2	2	2	2	1
9	2	2	2	2	2	2	2
10	2	2	2	2	2	2	2
11	2	2	2	2	2	2	2
12	2	2	2	2	2	2	2
13	2	2	2	2	2	2	2
14	2	2	2	2	2	2	2
15	2	2	2	2	2	2	2
16	2	2	2	2	2	2	2
17	2	2	2	2	2	2	2
18	2	1	2	2	2	2	2
19	1	1	1	2	2	2	2
20	1	1	1	1	2	1	2
21	1	1	1	1	2	1	1
22	1	1	1	1	2	1	1
23	1	1	1	1	1	1	1

LANES REQUIRED TO BE OPEN BY HOUR AND TIME OF DAY

FALL SEASON SEPTEMBER 16 THRU November 30

HR/DAY	MON	TUES	WEDS	THUR	FRI	SAT	SUN
0	1	1	1	1	1	1	1
1	1	1	1	1	1	1	1
2	1	1	1	1	1	1	1
3	1	1	1	1	1	1	1
4	1	1	1	1	1	1	1
5	1	1	1	1	1	1	1
6	1	1	1	1	1	1	1
7	2	2	2	2	2	1	1
8	2	2	2	2	2	1	1
9	2	1	2	2	2	2	1
10	2	1	2	2	2	2	2
11	2	2	2	2	2	2	2
12	2	2	2	2	2	2	2
13	2	2	2	2	2	2	2
14	2	2	2	2	2	2	2
15	2	2	2	2	2	2	2
16	2	2	2	2	2	2	2
17	2	2	2	2	2	2	2
18	2	2	2	2	2	2	2
19	1	1	1	1	2	1	2
20	1	1	1	1	2	1	2
21	1	1	1	1	2	1	1
22	1	1	1	1	1	1	1
23	1	1	1	1	1	1	1

WINTER SEAS. DECEMBER 1 THRU February 28

HR/DAY	MON	TUES	WEDS	THUR	FRI	SAT	SUN
0	1	1	1	1	1	1	1
1	1	1	1	1	1	1	1
2	1	1	1	1	1	1	1
3	1	1	1	1	1	1	1
4	1	1	1	1	1	1	1
5	1	1	1	1	1	1	1
6	1	1	1	1	1	1	1
7	2	2	2	2	2	1	1
8	2	2	2	2	2	1	1
9	1	1	2	1	2	2	1
10	2	1	2	1	2	2	1
11	2	2	2	2	2	2	2
12	2	2	2	2	2	2	2
13	2	2	2	2	2	2	2
14	2	2	2	2	2	2	2
15	2	2	2	2	2	2	2
16	2	2	2	2	2	2	2
17	2	2	2	2	2	2	2
18	1	1	1	2	2	1	2
19	1	1	1	1	2	1	1
20	1	1	1	1	2	1	1
21	1	1	1	1	2	1	1
22	1	1	1	1	1	1	1
23	1	1	1	1	1	1	1

I-87 SOUTHBOUND INTERCHANGES 22 TO 21A (1,300 VEH/HR/LANE)

LANES REQUIRED TO BE OPEN BY HOUR AND TIME OF DAY

SPRING SEASON MARCH 1 THRU MAY 20

HR/DAY	MON	TUES	WEDS	THUR	FRI	SAT	SUN
0	1	1	1	1	1	1	1
1	1	1	1	1	1	1	1
2	1	1	1	1	1	1	1
3	1	1	1	1	1	1	1
4	1	1	1	1	1	1	1
5	1	1	1	1	1	1	1
6	1	1	1	1	1	1	1
7	1	1	1	1	1	1	1
8	1	1	1	1	1	1	1
9	1	1	1	1	2	2	1
10	2	1	1	1	2	2	2
11	2	1	1	2	2	2	2
12	2	1	1	2	2	2	2
13	2	1	2	2	2	2	2
14	2	2	2	2	2	2	2
15	2	2	2	2	2	2	2
16	2	2	2	2	2	2	2
17	2	2	2	2	2	2	2
18	1	1	1	2	2	1	2
19	1	1	1	1	1	1	2
20	1	1	1	1	1	1	1
21	1	1	1	1	1	1	1
22	1	1	1	1	1	1	1
23	1	1	1	1	1	1	1

SUMMER SEASON MAY 21 THRU SEPTEMBER 15

HR/DAY	MON	TUES	WEDS	THUR	FRI	SAT	SUN
0	1	1	1	1	1	1	1
1	1	1	1	1	1	1	1
2	1	1	1	1	1	1	1
3	1	1	1	1	1	1	1
4	1	1	1	1	1	1	1
5	1	1	1	1	1	1	1
6	1	1	1	1	1	1	1
7	2	1	1	1	1	1	1
8	2	1	1	2	2	2	2
9	2	2	2	2	2	2	2
10	2	2	2	2	2	2	2
11	2	2	2	2	2	2	2
12	2	2	2	2	2	2	2
13	2	2	2	2	2	2	2
14	2	2	2	2	2	2	2
15	2	2	2	2	2	2	2
16	2	2	2	2	2	2	2
17	2	2	2	2	2	2	2
18	2	2	2	2	2	2	2
19	2	1	1	1	2	2	2
20	2	1	1	1	1	1	2
21	1	1	1	1	1	1	2
22	1	1	1	1	1	1	1
23	1	1	1	1	1	1	1

LANES REQUIRED TO BE OPEN BY HOUR AND TIME OF DAY

FALL SEASON SEPTEMBER 16 THRU November 30

HR/DAY	MON	TUES	WEDS	THUR	FRI	SAT	SUN
0	1	1	1	1	1	1	1
1	1	1	1	1	1	1	1
2	1	1	1	1	1	1	1
3	1	1	1	1	1	1	1
4	1	1	1	1	1	1	1
5	1	1	1	1	1	1	1
6	1	1	1	1	1	1	1
7	1	1	1	1	1	1	1
8	1	1	1	1	1	1	1
9	2	1	1	2	2	2	2
10	2	1	2	2	2	2	2
11	2	2	2	2	2	2	2
12	2	2	2	2	2	2	2
13	2	2	2	2	2	2	2
14	2	2	2	2	2	2	2
15	2	2	2	2	2	2	2
16	2	2	2	2	2	2	2
17	2	2	2	2	2	2	2
18	2	2	2	2	2	1	2
19	1	2	1	1	2	1	2
20	1	1	1	1	1	1	2
21	1	1	1	1	1	1	1
22	1	1	1	1	1	1	1
23	1	1	1	1	1	1	1

WINTER SEAS. DECEMBER 1 THRU February 28

HR/DAY	MON	TUES	WEDS	THUR	FRI	SAT	SUN
0	1	1	1	1	1	1	1
1	1	1	1	1	1	1	1
2	1	1	1	1	1	1	1
3	1	1	1	1	1	1	1
4	1	1	1	1	1	1	1
5	1	1	1	1	1	1	1
6	1	1	1	1	1	1	1
7	1	1	1	1	1	1	1
8	1	1	1	1	1	1	1
9	1	1	1	1	1	2	1
10	2	1	2	1	2	2	2
11	2	2	2	2	2	2	2
12	2	2	2	2	2	2	2
13	2	2	2	2	2	2	2
14	2	2	2	2	2	2	2
15	2	2	2	2	2	2	2
16	2	2	2	2	2	2	2
17	2	2	2	2	2	1	2
18	2	1	1	1	2	1	2
19	1	1	1	1	1	1	2
20	1	1	1	1	1	1	1
21	1	1	1	1	1	1	1
22	1	1	1	1	1	1	1
23	1	1	1	1	1	1	1

NOTES:

1) THE NEW YORK STATE THRUWAY IS A LIMITED ACCESS, HIGH-SPEED, HIGH-VOLUME HIGHWAY. TRAFFIC SHALL BE MAINTAINED IN ACCORDANCE WITH THE *MANUAL ON UNIFORM TRAFFIC CONTROL DEVICES (MUTCD)*, THE *WORK ZONE TRAFFIC CONTROL PLANS*, AND THE *STANDARD SPECIFICATIONS* SECTION 619 AS AMENDED BY THE AUTHORITY.

2) LANE CLOSURES ON THE THRUWAY SHALL ONLY BE ALLOWED IN ACCORDANCE WITH THESE TRAFFIC MANAGEMENT TABLE(S), UNLESS INDICATED OTHERWISE IN THE CONTRACT PLANS OR PROPOSAL DOCUMENTS.

3) LANE CLOSURE CHARTS SHALL APPLY AS FOLLOWS:

- 1,150 VEH/HR/LANE: APPLIES TO ALL WORK REQUIRING LANE CLOSURE(S) EXCEPT AS PERMITTED BELOW.

- 1,300 VEH/HR/LANE: APPLIES TO NON-EVASIVE WORK WHERE WORKERS AND/OR EQUIPMENT ARE LOCATED 4 FT. OR MORE FROM TRAVEL (SPACE) LANE, OR AS APPROVED BY THE THRUWAY PROJECT ENGINEER. WORK SHOULD BE ABLE TO BE IMMEDIATELY STOPPED AND LANE CLOSURE(S) REMOVED IN THE EVENT QUEUES, GREATER THAN 1 MILE, DEVELOP.

NEW YORK STATE OF OPPORTUNITY. Thruway Authority

U.S. CUSTOMARY STANDARD SHEET

LANE CLOSURE CHARTS
1,300 VEHICLES PER HOUR
ALBANY DIVISION
(SHEET 6 OF 18)

APPROVED SEPTEMBER 1, 2018

/S/ PATRICK THOMPSON, P.E.
DIRECTOR DESIGN SUPPORT SERVICES BUREAU

ISSUED UNDER DB 18-003

TA 619-35

I-87 NORTHBOUND INTERCHANGES 22 TO 23 (1,300 VEH/HR/LANE)

LANES REQUIRED TO BE OPEN BY HOUR AND TIME OF DAY

SPRING SEASON MARCH 1 THRU MAY 20

HR/DAY	MON	TUES	WEDS	THUR	FRI	SAT	SUN
0	1	1	1	1	1	1	1
1	1	1	1	1	1	1	1
2	1	1	1	1	1	1	1
3	1	1	1	1	1	1	1
4	1	1	1	1	1	1	1
5	1	1	1	1	1	1	1
6	1	1	1	1	1	1	1
7	2	2	2	2	2	1	1
8	2	2	2	2	2	1	1
9	2	2	1	2	2	2	1
10	2	1	1	1	2	2	1
11	2	2	1	2	2	2	2
12	2	2	2	2	2	2	2
13	2	2	2	2	2	2	2
14	2	2	2	2	2	2	2
15	2	2	2	2	2	2	2
16	2	2	2	2	2	2	2
17	2	2	2	2	2	2	2
18	1	1	1	2	2	1	2
19	1	1	1	1	2	1	2
20	1	1	1	1	2	1	2
21	1	1	1	1	1	1	1
22	1	1	1	1	1	1	1
23	1	1	1	1	1	1	1

SUMMER SEASON MAY 21 THRU SEPTEMBER 15

HR/DAY	MON	TUES	WEDS	THUR	FRI	SAT	SUN
0	1	1	1	1	1	1	1
1	1	1	1	1	1	1	1
2	1	1	1	1	1	1	1
3	1	1	1	1	1	1	1
4	1	1	1	1	1	1	1
5	1	1	1	1	1	1	1
6	1	1	1	1	1	1	1
7	2	2	2	2	2	1	1
8	2	2	2	2	2	2	1
9	2	1	1	2	2	2	1
10	2	1	1	2	2	2	2
11	2	2	1	2	2	2	2
12	2	2	2	2	2	2	2
13	2	2	2	2	2	2	2
14	2	2	2	2	2	2	2
15	2	2	2	2	2	2	2
16	2	2	2	2	2	2	2
17	2	1	2	2	2	2	2
18	1	1	1	2	2	1	2
19	1	1	1	1	2	1	2
20	1	1	1	1	2	1	1
21	1	1	1	1	2	1	1
22	1	1	1	1	1	1	1
23	1	1	1	1	1	1	1

LANES REQUIRED TO BE OPEN BY HOUR AND TIME OF DAY

FALL SEASON SEPTEMBER 16 THRU November 30

HR/DAY	MON	TUES	WEDS	THUR	FRI	SAT	SUN
0	1	1	1	1	1	1	1
1	1	1	1	1	1	1	1
2	1	1	1	1	1	1	1
3	1	1	1	1	1	1	1
4	1	1	1	1	1	1	1
5	1	1	1	1	1	1	1
6	1	1	1	1	1	1	1
7	2	2	2	2	2	1	1
8	2	2	2	2	2	1	1
9	2	1	2	2	2	2	1
10	2	1	2	2	2	2	2
11	2	2	2	2	2	2	2
12	2	2	2	2	2	2	2
13	2	2	2	2	2	2	2
14	2	2	2	2	2	2	2
15	2	2	2	2	2	2	2
16	2	2	2	2	2	2	2
17	2	2	2	2	2	2	2
18	2	1	2	2	2	2	2
19	1	1	2	1	2	1	2
20	1	1	1	1	2	1	2
21	1	1	1	1	2	1	1
22	1	1	1	1	1	1	1
23	1	1	1	1	1	1	1

WINTER SEAS. DECEMBER 1 THRU February 28

HR/DAY	MON	TUES	WEDS	THUR	FRI	SAT	SUN
0	1	1	1	1	1	1	1
1	1	1	1	1	1	1	1
2	1	1	1	1	1	1	1
3	1	1	1	1	1	1	1
4	1	1	1	1	1	1	1
5	1	1	1	1	1	1	1
6	1	1	1	1	1	1	1
7	2	2	2	2	2	1	1
8	2	2	2	2	2	1	1
9	1	1	1	1	1	1	1
10	1	1	1	1	1	2	1
11	1	1	1	1	1	2	1
12	1	1	1	1	2	2	2
13	1	1	1	1	2	2	2
14	1	1	1	2	2	2	2
15	2	1	2	2	2	1	2
16	1	1	1	2	2	1	2
17	1	1	1	2	2	1	2
18	1	1	1	1	2	1	1
19	1	1	1	1	2	1	1
20	1	1	1	1	2	1	1
21	1	1	1	1	2	1	1
22	1	1	1	1	1	1	1
23	1	1	1	1	1	1	1

I-87 SOUTHBOUND INTERCHANGES 22 TO 23 (1,300 VEH/HR/LANE)

LANES REQUIRED TO BE OPEN BY HOUR AND TIME OF DAY

SPRING SEASON MARCH 1 THRU MAY 20

HR/DAY	MON	TUES	WEDS	THUR	FRI	SAT	SUN
0	1	1	1	1	1	1	1
1	1	1	1	1	1	1	1
2	1	1	1	1	1	1	1
3	1	1	1	1	1	1	1
4	1	1	1	1	1	1	1
5	1	1	1	1	1	1	1
6	1	1	1	1	1	1	1
7	1	1	1	1	1	1	1
8	1	1	1	1	1	1	1
9	2	1	1	1	2	2	1
10	2	1	1	1	2	2	2
11	2	1	1	2	2	2	2
12	2	1	1	2	2	2	2
13	2	2	2	2	2	2	2
14	2	2	2	2	2	2	2
15	2	2	2	2	2	2	2
16	2	2	2	2	2	2	2
17	2	2	2	2	2	2	2
18	2	1	1	2	2	1	2
19	1	1	1	1	2	1	2
20	1	1	1	1	1	1	1
21	1	1	1	1	1	1	1
22	1	1	1	1	1	1	1
23	1	1	1	1	1	1	1

SUMMER SEASON MAY 21 THRU SEPTEMBER 15

HR/DAY	MON	TUES	WEDS	THUR	FRI	SAT	SUN
0	1	1	1	1	1	1	1
1	1	1	1	1	1	1	1
2	1	1	1	1	1	1	1
3	1	1	1	1	1	1	1
4	1	1	1	1	1	1	1
5	1	1	1	1	1	1	1
6	1	1	1	1	1	1	1
7	2	1	1	1	1	1	1
8	2	2	1	2	2	2	2
9	2	2	2	2	2	2	2
10	2	2	2	2	2	2	2
11	2	2	2	2	2	2	2
12	2	2	2	2	2	2	2
13	2	2	2	2	2	2	2
14	2	2	2	2	2	2	2
15	2	2	2	2	2	2	2
16	2	2	2	2	2	2	2
17	2	2	2	2	2	2	2
18	2	2	2	2	2	2	2
19	2	1	1	2	2	2	2
20	2	1	1	1	1	1	2
21	1	1	1	1	1	1	2
22	1	1	1	1	1	1	1
23	1	1	1	1	1	1	1

LANES REQUIRED TO BE OPEN BY HOUR AND TIME OF DAY

FALL SEASON SEPTEMBER 16 THRU November 30

HR/DAY	MON	TUES	WEDS	THUR	FRI	SAT	SUN
0	1	1	1	1	1	1	1
1	1	1	1	1	1	1	1
2	1	1	1	1	1	1	1
3	1	1	1	1	1	1	1
4	1	1	1	1	1	1	1
5	1	1	1	1	1	1	1
6	1	1	1	1	1	1	1
7	1	1	1	1	1	1	1
8	1	1	1	1	1	2	1
9	2	1	2	2	2	2	2
10	2	2	2	2	2	2	2
11	2	2	2	2	2	2	2
12	2	2	2	2	2	2	2
13	2	2	2	2	2	2	2
14	2	2	2	2	2	2	2
15	2	2	2	2	2	2	2
16	2	2	2	2	2	2	2
17	2	2	2	2	2	2	2
18	2	2	2	2	2	2	2
19	1	1	1	1	2	1	2
20	1	1	1	1	1	1	2
21	1	1	1	1	1	1	1
22	1	1	1	1	1	1	1
23	1	1	1	1	1	1	1

WINTER SEAS. DECEMBER 1 THRU February 28

HR/DAY	MON	TUES	WEDS	THUR	FRI	SAT	SUN
0	1	1	1	1	1	1	1
1	1	1	1	1	1	1	1
2	1	1	1	1	1	1	1
3	1	1	1	1	1	1	1
4	1	1	1	1	1	1	1
5	1	1	1	1	1	1	1
6	1	1	1	1	1	1	1
7	1	1	1	1	1	1	1
8	1	1	1	1	1	1	1
9	1	1	2	1	2	2	1
10	2	2	2	2	2	2	2
11	2	2	2	2	2	2	2
12	2	2	2	2	2	2	2
13	2	2	2	2	2	2	2
14	2	2	2	2	2	2	2
15	2	2	2	2	2	2	2
16	2	2	2	2	2	2	2
17	2	2	2	2	2	2	2
18	2	2	1	2	2	1	2
19	1	1	1	1	1	1	2
20	1	1	1	1	1	1	1
21	1	1	1	1	1	1	1
22	1	1	1	1	1	1	1
23	1	1	1	1	1	1	1

NOTES:

1) THE NEW YORK STATE THRUWAY IS A LIMITED ACCESS, HIGH-SPEED, HIGH-VOLUME HIGHWAY. TRAFFIC SHALL BE MAINTAINED IN ACCORDANCE WITH THE *MANUAL ON UNIFORM TRAFFIC CONTROL DEVICES (MUTCD)*, THE *WORK ZONE TRAFFIC CONTROL PLANS*, AND THE *STANDARD SPECIFICATIONS* SECTION 619 AS AMENDED BY THE AUTHORITY.

2) LANE CLOSURES ON THE THRUWAY SHALL ONLY BE ALLOWED IN ACCORDANCE WITH THESE TRAFFIC MANAGEMENT TABLE(S), UNLESS INDICATED OTHERWISE IN THE CONTRACT PLANS OR PROPOSAL DOCUMENTS.

3) LANE CLOSURE CHARTS SHALL APPLY AS FOLLOWS:

- 1,150 VEH/HR/LANE: APPLIES TO ALL WORK REQUIRING LANE CLOSURE(S) EXCEPT AS PERMITTED BELOW.

- 1,300 VEH/HR/LANE: APPLIES TO NON-EVASIVE WORK WHERE WORKERS AND/OR EQUIPMENT ARE LOCATED 4 FT. OR MORE FROM TRAVEL (SPACE) LANE, OR AS APPROVED BY THE THRUWAY PROJECT ENGINEER. WORK SHOULD BE ABLE TO BE IMMEDIATELY STOPPED AND LANE CLOSURE(S) REMOVED IN THE EVENT QUEUES, GREATER THAN 1 MILE, DEVELOP.

NEW YORK STATE OF OPPORTUNITY. Thruway Authority

U.S. CUSTOMARY STANDARD SHEET

LANE CLOSURE CHARTS
1,300 VEHICLES PER HOUR
ALBANY DIVISION
(SHEET 7 OF 18)

APPROVED SEPTEMBER 1, 2018

/S/ PATRICK THOMPSON, P.E.
DIRECTOR DESIGN SUPPORT SERVICES BUREAU

ISSUED UNDER DB 18-003

TA 619-35

I-87 NORTHBOUND INTERCHANGES 23 TO 24 (1,300 VEH/HR/LANE)

LANES REQUIRED TO BE OPEN BY HOUR AND TIME OF DAY

SPRING SEASON MARCH 1 THRU MAY 20

HR/DAY	MON	TUES	WEDS	THUR	FRI	SAT	SUN
0	1	1	1	1	1	1	1
1	1	1	1	1	1	1	1
2	1	1	1	1	1	1	1
3	1	1	1	1	1	1	1
4	1	1	1	1	1	1	1
5	1	1	1	1	1	1	1
6	1	1	1	1	1	1	1
7	2	2	2	2	2	1	1
8	2	2	2	2	2	1	1
9	1	1	1	1	2	2	1
10	2	1	1	1	2	2	1
11	2	1	1	2	2	2	2
12	2	2	2	2	1	2	2
13	2	2	2	2	2	2	2
14	2	2	2	2	2	2	2
15	2	2	2	2	3	2	2
16	2	3	2	3	3	2	2
17	2	2	2	3	3	2	2
18	2	2	2	2	2	1	2
19	1	1	1	1	2	1	2
20	1	1	1	1	2	1	1
21	1	1	1	1	1	1	1
22	1	1	1	1	1	1	1
23	1	1	1	1	1	1	1

SUMMER SEASON MAY 21 THRU SEPTEMBER 15

HR/DAY	MON	TUES	WEDS	THUR	FRI	SAT	SUN
0	1	1	1	1	1	1	1
1	1	1	1	1	1	1	1
2	1	1	1	1	1	1	1
3	1	1	1	1	1	1	1
4	1	1	1	1	1	1	1
5	1	1	1	1	1	1	1
6	1	1	1	1	1	1	1
7	2	2	2	2	2	1	1
8	2	2	2	2	2	2	1
9	2	2	2	2	2	2	2
10	2	2	2	2	2	2	2
11	2	2	2	2	2	3	2
12	2	2	2	2	2	3	2
13	2	2	2	2	3	2	2
14	2	2	2	2	3	2	2
15	2	2	2	2	3	2	2
16	3	2	3	3	3	2	2
17	2	2	2	3	3	2	2
18	2	2	2	2	3	2	2
19	1	1	1	2	2	1	2
20	1	1	1	1	2	1	1
21	1	1	1	1	2	1	1
22	1	1	1	1	2	1	1
23	1	1	1	1	1	1	1

LANES REQUIRED TO BE OPEN BY HOUR AND TIME OF DAY

FALL SEASON SEPTEMBER 16 THRU November 30

HR/DAY	MON	TUES	WEDS	THUR	FRI	SAT	SUN
0	1	1	1	1	1	1	1
1	1	1	1	1	1	1	1
2	1	1	1	1	1	1	1
3	1	1	1	1	1	1	1
4	1	1	1	1	1	1	1
5	1	1	1	1	1	1	1
6	1	1	1	1	1	1	1
7	2	2	2	2	2	1	1
8	2	2	2	2	2	1	1
9	1	1	1	1	2	2	1
10	2	1	1	2	2	2	1
11	2	2	2	2	2	2	2
12	2	2	2	2	2	2	2
13	2	2	2	2	2	2	2
14	2	2	2	2	2	2	2
15	2	2	2	2	3	2	2
16	2	3	3	3	3	2	2
17	2	2	2	3	3	2	2
18	2	2	2	2	2	1	2
19	1	1	1	1	2	1	2
20	1	1	1	1	2	1	1
21	1	1	1	1	2	1	1
22	1	1	1	1	1	1	1
23	1	1	1	1	1	1	1

WINTER SEAS. DECEMBER 1 THRU February 28

HR/DAY	MON	TUES	WEDS	THUR	FRI	SAT	SUN
0	1	1	1	1	1	1	1
1	1	1	1	1	1	1	1
2	1	1	1	1	1	1	1
3	1	1	1	1	1	1	1
4	1	1	1	1	1	1	1
5	1	1	1	1	1	1	1
6	1	1	1	1	1	1	1
7	2	2	2	2	2	1	1
8	2	2	2	2	2	1	1
9	1	1	1	1	1	1	1
10	1	1	1	1	1	2	1
11	1	1	2	2	2	2	2
12	2	2	2	2	2	2	2
13	2	2	2	2	2	2	2
14	2	2	2	2	2	2	2
15	2	2	2	2	2	2	2
16	2	3	3	3	3	2	2
17	2	2	2	2	3	1	2
18	1	2	2	2	2	1	1
19	1	1	1	1	2	1	1
20	1	1	1	1	2	1	1
21	1	1	1	1	2	1	1
22	1	1	1	1	1	1	1
23	1	1	1	1	1	1	1

I-87 SOUTHBOUND INTERCHANGES 24 TO 23 (1,300 VEH/HR/LANE)

LANES REQUIRED TO BE OPEN BY HOUR AND TIME OF DAY

SPRING SEASON MARCH 1 THRU MAY 20

HR/DAY	MON	TUES	WEDS	THUR	FRI	SAT	SUN
0	1	1	1	1	1	1	1
1	1	1	1	1	1	1	1
2	1	1	1	1	1	1	1
3	1	1	1	1	1	1	1
4	1	1	1	1	1	1	1
5	1	1	1	1	1	1	1
6	2	2	2	2	2	1	1
7	2	2	2	2	2	1	1
8	2	2	2	2	2	1	1
9	2	2	2	2	2	1	1
10	2	2	2	2	2	2	2
11	2	2	2	2	2	2	2
12	2	2	2	2	2	2	2
13	2	2	2	2	2	2	2
14	2	2	2	2	2	2	2
15	2	2	2	2	2	2	2
16	2	2	2	2	2	2	2
17	2	2	2	2	2	2	2
18	2	1	1	2	2	1	2
19	1	1	1	1	2	1	2
20	1	1	1	1	1	1	1
21	1	1	1	1	1	1	1
22	1	1	1	1	1	1	1
23	1	1	1	1	1	1	1

SUMMER SEASON MAY 21 THRU SEPTEMBER 15

HR/DAY	MON	TUES	WEDS	THUR	FRI	SAT	SUN
0	1	1	1	1	1	1	1
1	1	1	1	1	1	1	1
2	1	1	1	1	1	1	1
3	1	1	1	1	1	1	1
4	1	1	1	1	1	1	1
5	1	1	1	1	1	1	1
6	2	2	2	2	1	1	1
7	2	2	2	2	2	1	1
8	2	2	2	2	2	2	1
9	2	2	2	2	2	2	2
10	2	2	2	2	2	2	2
11	2	2	2	2	2	2	3
12	2	2	2	2	2	2	2
13	2	2	2	2	2	2	3
14	2	2	2	2	2	2	3
15	2	2	2	2	2	2	3
16	2	2	2	2	2	2	3
17	2	2	2	2	2	2	3
18	2	2	2	2	2	2	2
19	2	1	1	2	2	2	2
20	1	1	1	1	1	1	2
21	1	1	1	1	1	1	2
22	1	1	1	1	1	1	1
23	1	1	1	1	1	1	1

LANES REQUIRED TO BE OPEN BY HOUR AND TIME OF DAY

FALL SEASON SEPTEMBER 16 THRU November 30

HR/DAY	MON	TUES	WEDS	THUR	FRI	SAT	SUN
0	1	1	1	1	1	1	1
1	1	1	1	1	1	1	1
2	1	1	1	1	1	1	1
3	1	1	1	1	1	1	1
4	1	1	1	1	1	1	1
5	1	1	1	1	1	1	1
6	2	2	2	2	1	1	1
7	2	2	2	2	2	1	1
8	2	2	2	2	2	1	1
9	2	2	2	2	2	2	1
10	2	2	2	2	2	2	2
11	2	2	2	2	2	2	2
12	2	2	2	2	2	2	2
13	2	2	2	2	2	2	2
14	2	2	2	2	2	2	2
15	2	2	2	2	2	2	2
16	2	2	2	2	2	2	2
17	2	2	2	2	2	2	2
18	2	2	1	2	2	1	2
19	1	1	1	1	2	1	2
20	1	1	1	1	1	1	2
21	1	1	1	1	1	1	1
22	1	1	1	1	1	1	1
23	1	1	1	1	1	1	1

WINTER SEAS. DECEMBER 1 THRU February 28

HR/DAY	MON	TUES	WEDS	THUR	FRI	SAT	SUN
0	1	1	1	1	1	1	1
1	1	1	1	1	1	1	1
2	1	1	1	1	1	1	1
3	1	1	1	1	1	1	1
4	1	1	1	1	1	1	1
5	1	1	1	1	1	1	1
6	2	2	2	2	1	1	1
7	2	2	2	2	2	1	1
8	2	2	2	2	2	1	1
9	2	2	2	2	2	1	1
10	2	2	1	1	2	2	1
11	2	2	1	2	2	2	2
12	2	2	2	2	2	2	2
13	2	2	2	2	2	2	2
14	2	2	2	2	2	2	2
15	2	2	2	2	2	2	2
16	2	2	2	2	2	2	2
17	2	2	2	2	2	1	2
18	2	1	2	2	2	1	2
19	1	1	1	1	1	1	2
20	1	1	1	1	1	1	1
21	1	1	1	1	1	1	1
22	1	1	1	1	1	1	1
23	1	1	1	1	1	1	1

NOTES:

1) THE NEW YORK STATE THRUWAY IS A LIMITED ACCESS, HIGH-SPEED, HIGH-VOLUME HIGHWAY. TRAFFIC SHALL BE MAINTAINED IN ACCORDANCE WITH THE *MANUAL ON UNIFORM TRAFFIC CONTROL DEVICES (MUTCD)*, THE *WORK ZONE TRAFFIC CONTROL PLANS*, AND THE *STANDARD SPECIFICATIONS* SECTION 619 AS AMENDED BY THE AUTHORITY.

2) LANE CLOSURES ON THE THRUWAY SHALL ONLY BE ALLOWED IN ACCORDANCE WITH THESE TRAFFIC MANAGEMENT TABLE(S), UNLESS INDICATED OTHERWISE IN THE CONTRACT PLANS OR PROPOSAL DOCUMENTS.

3) LANE CLOSURE CHARTS SHALL APPLY AS FOLLOWS:

- 1,150 VEH/HR/LANE: APPLIES TO ALL WORK REQUIRING LANE CLOSURE(S) EXCEPT AS PERMITTED BELOW.

- 1,300 VEH/HR/LANE: APPLIES TO NON-EVASIVE WORK WHERE WORKERS AND/OR EQUIPMENT ARE LOCATED 4 FT. OR MORE FROM TRAVEL (SPACE) LANE, OR AS APPROVED BY THE THRUWAY PROJECT ENGINEER. WORK SHOULD BE ABLE TO BE IMMEDIATELY STOPPED AND LANE CLOSURE(S) REMOVED IN THE EVENT QUEUES, GREATER THAN 1 MILE, DEVELOP.

NEW YORK STATE OF OPPORTUNITY. Thruway Authority

U.S. CUSTOMARY STANDARD SHEET

LANE CLOSURE CHARTS
1,300 VEHICLES PER HOUR
ALBANY DIVISION
(SHEET 8 OF 18)

APPROVED SEPTEMBER 1, 2018

/S/ PATRICK THOMPSON, P.E.
DIRECTOR DESIGN SUPPORT SERVICES BUREAU

ISSUED UNDER DB 18-003

TA 619-35

I-90 WESTBOUND INTERCHANGES 24 TO 25 (1,300 VEH/HR/LANE)

LANES REQUIRED TO BE OPEN BY HOUR AND TIME OF DAY

SPRING SEASON MARCH 1 THRU MAY 20

HR/DAY	MON	TUES	WEDS	THUR	FRI	SAT	SUN
0	1	1	1	1	1	1	1
1	1	1	1	1	1	1	1
2	1	1	1	1	1	1	1
3	1	1	1	1	1	1	1
4	1	1	1	1	1	1	1
5	1	1	1	1	1	1	1
6	2	2	1	2	1	1	1
7	2	2	2	2	2	1	1
8	2	2	2	2	2	2	1
9	2	2	2	2	2	2	1
10	2	2	2	2	2	2	2
11	2	2	2	2	2	2	2
12	2	2	2	2	3	2	2
13	2	2	2	2	3	2	2
14	3	2	2	3	3	2	2
15	3	3	3	3	3	2	2
16	3	3	3	3	3	2	2
17	3	3	3	3	3	2	2
18	2	2	2	2	3	2	2
19	2	2	2	2	2	2	2
20	1	2	2	2	2	1	2
21	1	1	1	2	2	1	1
22	1	1	1	1	1	1	1
23	1	1	1	1	1	1	1

SUMMER SEASON MAY 21 THRU SEPTEMBER 15

HR/DAY	MON	TUES	WEDS	THUR	FRI	SAT	SUN
0	1	1	1	1	1	1	1
1	1	1	1	1	1	1	1
2	1	1	1	1	1	1	1
3	1	1	1	1	1	1	1
4	1	1	1	1	1	1	1
5	1	1	1	1	1	1	1
6	2	2	2	2	2	1	1
7	2	2	2	2	2	1	1
8	2	2	2	2	2	2	1
9	2	2	2	2	2	2	2
10	2	2	2	2	2	2	2
11	2	2	2	2	3	3	2
12	2	2	2	2	3	3	2
13	2	2	2	3	3	2	2
14	3	3	3	3	3	2	2
15	3	3	3	3	3	2	2
16	3	3	3	3	3	2	2
17	3	3	3	3	3	2	2
18	2	2	2	3	3	2	2
19	2	2	2	2	2	2	2
20	2	2	2	2	2	2	2
21	1	1	2	2	2	1	1
22	1	1	1	1	2	1	1
23	1	1	1	1	1	1	1

LANES REQUIRED TO BE OPEN BY HOUR AND TIME OF DAY

FALL SEASON SEPTEMBER 16 THRU November 30

HR/DAY	MON	TUES	WEDS	THUR	FRI	SAT	SUN
0	1	1	1	1	1	1	1
1	1	1	1	1	1	1	1
2	1	1	1	1	1	1	1
3	1	1	1	1	1	1	1
4	1	1	1	1	1	1	1
5	1	1	1	1	1	1	1
6	2	2	2	2	2	1	1
7	2	2	2	3	2	1	1
8	2	2	2	2	2	2	1
9	2	2	2	2	2	2	2
10	2	2	2	2	2	2	2
11	2	2	2	2	2	2	2
12	2	2	2	2	3	2	2
13	2	2	2	2	3	2	3
14	3	3	3	3	3	2	3
15	3	3	3	3	3	2	3
16	3	3	3	3	3	2	3
17	3	3	3	3	3	2	2
18	2	3	3	3	3	2	2
19	2	2	2	2	2	2	2
20	2	2	2	2	2	1	1
21	1	1	1	1	2	1	1
22	1	1	1	1	1	1	1
23	1	1	1	1	1	1	1

WINTER SEAS. DECEMBER 1 THRU February 28

HR/DAY	MON	TUES	WEDS	THUR	FRI	SAT	SUN
0	1	1	1	1	1	1	1
1	1	1	1	1	1	1	1
2	1	1	1	1	1	1	1
3	1	1	1	1	1	1	1
4	1	1	1	1	1	1	1
5	1	1	1	1	1	1	1
6	1	2	2	2	1	1	1
7	2	2	2	2	2	1	1
8	2	2	2	2	2	1	1
9	2	2	2	2	2	2	1
10	2	2	2	2	2	2	2
11	2	2	2	2	2	2	2
12	2	2	2	2	2	2	2
13	2	2	2	2	2	2	2
14	2	2	3	2	3	2	2
15	3	3	3	3	3	2	2
16	3	3	3	3	3	2	2
17	3	3	3	3	3	2	2
18	2	2	2	2	3	2	2
19	2	2	2	2	2	2	2
20	1	2	2	2	2	1	1
21	1	1	1	1	2	1	1
22	1	1	1	1	1	1	1
23	1	1	1	1	1	1	1

I-90 EASTBOUND INTERCHANGES 25 TO 24 (1,300 VEH/HR/LANE)

LANES REQUIRED TO BE OPEN BY HOUR AND TIME OF DAY

SPRING SEASON MARCH 1 THRU MAY 20

HR/DAY	MON	TUES	WEDS	THUR	FRI	SAT	SUN
0	1	1	1	1	1	1	1
1	1	1	1	1	1	1	1
2	1	1	1	1	1	1	1
3	1	1	1	1	1	1	1
4	1	1	1	1	1	1	1
5	1	1	1	1	1	1	1
6	3	3	3	3	3	1	1
7	3	3	3	3	3	2	1
8	3	3	3	3	3	2	1
9	3	3	2	3	3	2	2
10	2	2	2	2	2	2	2
11	2	2	2	2	2	2	2
12	2	2	2	2	3	2	2
13	2	2	2	2	3	2	2
14	2	2	2	2	3	2	2
15	3	2	3	3	3	2	3
16	3	3	3	3	3	2	3
17	3	3	3	3	3	2	3
18	2	2	2	2	2	2	2
19	1	1	2	2	2	2	2
20	1	1	1	1	2	1	2
21	1	1	1	1	1	1	1
22	1	1	1	1	1	1	1
23	1	1	1	1	1	1	1

SUMMER SEASON MAY 21 THRU SEPTEMBER 15

HR/DAY	MON	TUES	WEDS	THUR	FRI	SAT	SUN
0	1	1	1	1	1	1	1
1	1	1	1	1	1	1	1
2	1	1	1	1	1	1	1
3	1	1	1	1	1	1	1
4	1	1	1	1	1	1	1
5	2	1	1	1	1	1	1
6	3	3	3	3	3	1	1
7	3	3	3	3	3	2	1
8	3	3	3	3	3	2	1
9	3	2	3	3	3	2	2
10	2	2	2	2	2	2	2
11	2	2	2	2	3	2	3
12	3	2	2	2	3	2	3
13	3	2	2	2	3	2	3
14	3	2	2	2	3	2	3
15	3	2	3	3	3	2	3
16	3	3	3	3	3	2	3
17	3	3	3	3	3	2	3
18	2	2	2	2	2	2	3
19	2	2	2	2	2	2	2
20	2	1	2	2	2	2	2
21	1	1	1	1	1	1	2
22	1	1	1	1	1	1	1
23	1	1	1	1	1	1	1

LANES REQUIRED TO BE OPEN BY HOUR AND TIME OF DAY

FALL SEASON SEPTEMBER 16 THRU November 30

HR/DAY	MON	TUES	WEDS	THUR	FRI	SAT	SUN
0	1	1	1	1	1	1	1
1	1	1	1	1	1	1	1
2	1	1	1	1	1	1	1
3	1	1	1	1	1	1	1
4	1	1	1	1	1	1	1
5	1	1	1	1	1	1	1
6	3	3	3	3	3	1	1
7	3	3	3	3	3	2	1
8	3	3	3	3	3	2	1
9	3	3	3	3	3	2	2
10	2	2	2	2	3	2	2
11	2	2	2	2	3	3	3
12	2	2	2	2	3	3	3
13	2	2	2	2	3	3	3
14	3	2	3	3	3	3	3
15	3	3	3	3	3	2	3
16	3	3	3	3	3	2	3
17	3	3	3	3	3	2	3
18	2	2	2	2	3	2	2
19	2	2	2	2	2	2	2
20	1	1	1	2	2	1	2
21	1	1	1	1	1	1	1
22	1	1	1	1	1	1	1
23	1	1	1	1	1	1	1

WINTER SEAS. DECEMBER 1 THRU February 28

HR/DAY	MON	TUES	WEDS	THUR	FRI	SAT	SUN
0	1	1	1	1	1	1	1
1	1	1	1	1	1	1	1
2	1	1	1	1	1	1	1
3	1	1	1	1	1	1	1
4	1	1	1	1	1	1	1
5	1	1	1	1	1	1	1
6	3	3	3	3	3	1	1
7	3	3	3	3	3	1	1
8	3	3	3	3	3	2	1
9	3	3	3	3	3	2	2
10	2	2	2	2	2	2	2
11	2	2	2	2	2	2	2
12	2	2	2	2	2	2	2
13	2	2	2	2	2	2	3
14	2	2	2	2	3	2	2
15	3	2	3	3	3	2	2
16	3	3	3	3	3	2	2
17	2	3	3	3	3	2	2
18	2	2	2	2	2	2	2
19	1	1	1	2	2	1	2
20	1	1	1	1	1	1	1
21	1	1	1	1	1	1	1
22	1	1	1	1	1	1	1
23	1	1	1	1	1	1	1

NOTES:

1) THE NEW YORK STATE THRUWAY IS A LIMITED ACCESS, HIGH-SPEED, HIGH-VOLUME HIGHWAY. TRAFFIC SHALL BE MAINTAINED IN ACCORDANCE WITH THE *MANUAL ON UNIFORM TRAFFIC CONTROL DEVICES (MUTCD)*, THE *WORK ZONE TRAFFIC CONTROL PLANS*, AND THE *STANDARD SPECIFICATIONS* SECTION 619 AS AMENDED BY THE AUTHORITY.

2) LANE CLOSURES ON THE THRUWAY SHALL ONLY BE ALLOWED IN ACCORDANCE WITH THESE TRAFFIC MANAGEMENT TABLE(S), UNLESS INDICATED OTHERWISE IN THE CONTRACT PLANS OR PROPOSAL DOCUMENTS.

3) LANE CLOSURE CHARTS SHALL APPLY AS FOLLOWS:

- 1,150 VEH/HR/LANE: APPLIES TO ALL WORK REQUIRING LANE CLOSURE(S) EXCEPT AS PERMITTED BELOW.
- 1,300 VEH/HR/LANE: APPLIES TO NON-EVASIVE WORK WHERE WORKERS AND/OR EQUIPMENT ARE LOCATED 4 FT. OR MORE FROM TRAVEL (SPACE) LANE, OR AS APPROVED BY THE THRUWAY PROJECT ENGINEER. WORK SHOULD BE ABLE TO BE IMMEDIATELY STOPPED AND LANE CLOSURE(S) REMOVED IN THE EVENT QUEUES, GREATER THAN 1 MILE, DEVELOP.

NEW YORK STATE OF OPPORTUNITY. Thruway Authority

U.S. CUSTOMARY STANDARD SHEET

LANE CLOSURE CHARTS
1,300 VEHICLES PER HOUR
ALBANY DIVISION
(SHEET 9 OF 18)

APPROVED SEPTEMBER 1, 2018

/S/ PATRICK THOMPSON, P.E.
DIRECTOR DESIGN SUPPORT SERVICES BUREAU

ISSUED UNDER DB 18-003

TA 619-35

I-90 WESTBOUND INTERCHANGES 25 TO 25A (1,300 VEH/HR/LANE)

LANES REQUIRED TO BE OPEN BY HOUR AND TIME OF DAY

SPRING SEASON MARCH 1 THRU MAY 20

HR/DAY	MON	TUES	WEDS	THUR	FRI	SAT	SUN
0	1	1	1	1	1	1	1
1	1	1	1	1	1	1	1
2	1	1	1	1	1	1	1
3	1	1	1	1	1	1	1
4	1	1	1	1	1	1	1
5	1	1	1	1	1	1	1
6	1	1	1	1	1	1	1
7	1	1	1	1	1	1	1
8	1	1	1	1	1	1	1
9	1	1	1	1	1	1	1
10	1	1	1	1	2	2	1
11	2	1	1	1	2	2	1
12	2	1	1	2	2	2	2
13	2	1	2	2	2	2	2
14	2	2	2	2	2	1	2
15	2	2	2	2	3	1	2
16	2	2	2	2	3	1	2
17	2	2	2	2	3	1	2
18	2	2	2	2	2	1	2
19	1	1	1	1	1	1	1
20	1	1	1	1	1	1	1
21	1	1	1	1	1	1	1
22	1	1	1	1	1	1	1
23	1	1	1	1	1	1	1

SUMMER SEASON MAY 21 THRU SEPTEMBER 15

HR/DAY	MON	TUES	WEDS	THUR	FRI	SAT	SUN
0	1	1	1	1	1	1	1
1	1	1	1	1	1	1	1
2	1	1	1	1	1	1	1
3	1	1	1	1	1	1	1
4	1	1	1	1	1	1	1
5	1	1	1	1	1	1	1
6	1	1	1	1	1	1	1
7	1	1	1	1	1	1	1
8	1	1	1	2	2	2	1
9	2	1	1	2	2	2	1
10	2	2	2	2	2	2	2
11	2	2	2	2	2	2	2
12	2	2	2	2	2	2	2
13	2	2	2	2	2	2	2
14	2	2	2	2	3	2	2
15	2	2	2	2	3	2	2
16	3	3	3	3	3	2	2
17	3	2	2	3	3	2	2
18	2	2	2	2	2	1	2
19	1	1	1	2	2	1	1
20	1	1	1	1	2	1	1
21	1	1	1	1	1	1	1
22	1	1	1	1	1	1	1
23	1	1	1	1	1	1	1

LANES REQUIRED TO BE OPEN BY HOUR AND TIME OF DAY

FALL SEASON SEPTEMBER 16 THRU November 30

HR/DAY	MON	TUES	WEDS	THUR	FRI	SAT	SUN
0	1	1	1	1	1	1	1
1	1	1	1	1	1	1	1
2	1	1	1	1	1	1	1
3	1	1	1	1	1	1	1
4	1	1	1	1	1	1	1
5	1	1	1	1	1	1	1
6	1	1	1	1	1	1	1
7	1	1	1	1	1	1	1
8	1	1	1	1	1	1	1
9	1	1	1	2	2	2	1
10	2	1	1	2	2	2	2
11	2	1	2	2	2	2	2
12	2	2	2	2	2	2	2
13	2	2	2	2	2	2	2
14	2	2	2	2	2	2	2
15	2	2	2	2	3	2	2
16	2	3	3	3	3	2	2
17	2	2	2	3	3	1	2
18	2	2	2	2	2	1	2
19	1	1	1	1	2	1	1
20	1	1	1	1	1	1	1
21	1	1	1	1	1	1	1
22	1	1	1	1	1	1	1
23	1	1	1	1	1	1	1

WINTER SEAS. DECEMBER 1 THRU February 28

HR/DAY	MON	TUES	WEDS	THUR	FRI	SAT	SUN
0	1	1	1	1	1	1	1
1	1	1	1	1	1	1	1
2	1	1	1	1	1	1	1
3	1	1	1	1	1	1	1
4	1	1	1	1	1	1	1
5	1	1	1	1	1	1	1
6	1	1	1	1	1	1	1
7	1	1	1	1	1	1	1
8	1	1	1	1	1	1	1
9	1	1	1	1	1	1	1
10	1	1	1	1	1	2	1
11	1	1	2	1	2	2	1
12	2	2	2	2	2	2	2
13	2	2	2	2	2	2	2
14	2	2	2	2	2	2	2
15	2	2	2	2	2	1	2
16	2	2	2	2	3	1	2
17	2	2	2	2	2	1	1
18	1	1	2	2	2	1	1
19	1	1	1	1	1	1	1
20	1	1	1	1	1	1	1
21	1	1	1	1	1	1	1
22	1	1	1	1	1	1	1
23	1	1	1	1	1	1	1

I-90 EASTBOUND INTERCHANGES 25A TO 25 (1,300 VEH/HR/LANE)

LANES REQUIRED TO BE OPEN BY HOUR AND TIME OF DAY

SPRING SEASON MARCH 1 THRU MAY 20

HR/DAY	MON	TUES	WEDS	THUR	FRI	SAT	SUN
0	1	1	1	1	1	1	1
1	1	1	1	1	1	1	1
2	1	1	1	1	1	1	1
3	1	1	1	1	1	1	1
4	1	1	1	1	1	1	1
5	1	1	1	1	1	1	1
6	2	2	2	2	2	1	1
7	3	3	3	3	2	1	1
8	2	2	2	2	2	1	1
9	2	2	2	2	2	1	1
10	2	1	1	1	2	2	1
11	2	1	1	2	2	2	2
12	2	1	1	2	2	2	2
13	2	1	1	2	2	2	2
14	2	1	2	2	2	2	2
15	2	2	2	2	2	2	2
16	2	2	2	2	2	2	2
17	2	1	2	2	2	1	2
18	1	1	1	1	2	1	2
19	1	1	1	1	1	1	2
20	1	1	1	1	1	1	1
21	1	1	1	1	1	1	1
22	1	1	1	1	1	1	1
23	1	1	1	1	1	1	1

SUMMER SEASON MAY 21 THRU SEPTEMBER 15

HR/DAY	MON	TUES	WEDS	THUR	FRI	SAT	SUN
0	1	1	1	1	1	1	1
1	1	1	1	1	1	1	1
2	1	1	1	1	1	1	1
3	1	1	1	1	1	1	1
4	1	1	1	1	1	1	1
5	1	1	1	1	1	1	1
6	2	2	2	2	2	1	1
7	3	3	3	3	2	1	1
8	2	2	2	2	2	1	1
9	2	2	2	2	2	2	1
10	2	2	2	2	2	2	2
11	2	2	2	2	2	2	2
12	2	2	2	2	2	2	2
13	2	2	2	2	2	2	2
14	2	2	2	2	2	2	2
15	2	2	2	2	2	2	2
16	2	2	2	2	2	2	2
17	2	2	2	2	2	2	2
18	2	1	1	2	2	2	2
19	2	1	1	1	2	1	2
20	1	1	1	1	1	1	2
21	1	1	1	1	1	1	1
22	1	1	1	1	1	1	1
23	1	1	1	1	1	1	1

LANES REQUIRED TO BE OPEN BY HOUR AND TIME OF DAY

FALL SEASON SEPTEMBER 16 THRU November 30

HR/DAY	MON	TUES	WEDS	THUR	FRI	SAT	SUN
0	1	1	1	1	1	1	1
1	1	1	1	1	1	1	1
2	1	1	1	1	1	1	1
3	1	1	1	1	1	1	1
4	1	1	1	1	1	1	1
5	1	1	1	1	1	1	1
6	2	2	2	2	2	1	1
7	3	3	3	3	3	1	1
8	2	2	2	2	2	1	1
9	2	2	2	2	2	1	1
10	2	2	2	2	2	2	2
11	2	2	2	2	2	2	2
12	2	2	2	2	2	2	2
13	2	2	2	2	2	2	2
14	2	2	2	2	2	2	2
15	2	2	2	2	2	2	2
16	2	2	2	2	2	2	2
17	2	2	2	2	2	2	2
18	1	2	1	1	2	1	2
19	1	1	1	1	1	1	2
20	1	1	1	1	1	1	1
21	1	1	1	1	1	1	1
22	1	1	1	1	1	1	1
23	1	1	1	1	1	1	1

WINTER SEAS. DECEMBER 1 THRU February 28

HR/DAY	MON	TUES	WEDS	THUR	FRI	SAT	SUN
0	1	1	1	1	1	1	1
1	1	1	1	1	1	1	1
2	1	1	1	1	1	1	1
3	1	1	1	1	1	1	1
4	1	1	1	1	1	1	1
5	1	1	1	1	1	1	1
6	2	2	2	2	2	1	1
7	3	3	3	3	2	1	1
8	2	2	2	2	2	1	1
9	2	2	2	2	2	1	1
10	2	1	1	2	2	2	1
11	2	2	1	2	2	2	2
12	2	2	2	2	2	2	2
13	2	2	2	2	2	2	2
14	2	2	2	2	2	2	2
15	2	2	2	2	2	2	2
16	2	2	2	2	2	1	2
17	2	1	1	2	2	1	2
18	1	1	1	1	2	1	1
19	1	1	1	1	1	1	1
20	1	1	1	1	1	1	1
21	1	1	1	1	1	1	1
22	1	1	1	1	1	1	1
23	1	1	1	1	1	1	1

NOTES:

1) THE NEW YORK STATE THRUWAY IS A LIMITED ACCESS, HIGH-SPEED, HIGH-VOLUME HIGHWAY. TRAFFIC SHALL BE MAINTAINED IN ACCORDANCE WITH THE *MANUAL ON UNIFORM TRAFFIC CONTROL DEVICES (MUTCD)*, THE *WORK ZONE TRAFFIC CONTROL PLANS*, AND THE *STANDARD SPECIFICATIONS* SECTION 619 AS AMENDED BY THE AUTHORITY.

2) LANE CLOSURES ON THE THRUWAY SHALL ONLY BE ALLOWED IN ACCORDANCE WITH THESE TRAFFIC MANAGEMENT TABLE(S), UNLESS INDICATED OTHERWISE IN THE CONTRACT PLANS OR PROPOSAL DOCUMENTS.

3) LANE CLOSURE CHARTS SHALL APPLY AS FOLLOWS:

- 1,150 VEH/HR/LANE: APPLIES TO ALL WORK REQUIRING LANE CLOSURE(S) EXCEPT AS PERMITTED BELOW.

- 1,300 VEH/HR/LANE: APPLIES TO NON-EVASIVE WORK WHERE WORKERS AND/OR EQUIPMENT ARE LOCATED 4 FT. OR MORE FROM TRAVEL (SPACE) LANE, OR AS APPROVED BY THE THRUWAY PROJECT ENGINEER. WORK SHOULD BE ABLE TO BE IMMEDIATELY STOPPED AND LANE CLOSURE(S) REMOVED IN THE EVENT QUEUES, GREATER THAN 1 MILE, DEVELOP.

NEW YORK STATE OF OPPORTUNITY. Thruway Authority

U.S. CUSTOMARY STANDARD SHEET

LANE CLOSURE CHARTS
1,300 VEHICLES PER HOUR
ALBANY DIVISION
(SHEET 10 OF 18)

APPROVED SEPTEMBER 1, 2018

/S/ PATRICK THOMPSON, P.E.
DIRECTOR DESIGN SUPPORT SERVICES BUREAU

ISSUED UNDER DB 18-003

TA 619-35

I-90 WESTBOUND INTERCHANGES 25A TO 26 (1,300 VEH/HR/LANE)

LANES REQUIRED TO BE OPEN BY HOUR AND TIME OF DAY

SPRING SEASON MARCH 1 THRU MAY 20

HR/DAY	MON	TUES	WEDS	THUR	FRI	SAT	SUN
0	1	1	1	1	1	1	1
1	1	1	1	1	1	1	1
2	1	1	1	1	1	1	1
3	1	1	1	1	1	1	1
4	1	1	1	1	1	1	1
5	1	1	1	1	1	1	1
6	1	1	1	1	1	1	1
7	1	1	1	1	1	1	1
8	1	1	1	1	1	1	1
9	1	1	1	1	1	1	1
10	1	1	1	1	1	1	1
11	1	1	1	1	1	1	1
12	1	1	1	1	2	1	1
13	1	1	1	1	2	1	1
14	1	1	1	1	2	1	1
15	2	1	1	2	2	1	1
16	2	2	2	2	2	1	1
17	2	2	2	2	2	1	1
18	1	1	1	1	2	1	1
19	1	1	1	1	1	1	1
20	1	1	1	1	1	1	1
21	1	1	1	1	1	1	1
22	1	1	1	1	1	1	1
23	1	1	1	1	1	1	1

SUMMER SEASON MAY 21 THRU SEPTEMBER 15

HR/DAY	MON	TUES	WEDS	THUR	FRI	SAT	SUN
0	1	1	1	1	1	1	1
1	1	1	1	1	1	1	1
2	1	1	1	1	1	1	1
3	1	1	1	1	1	1	1
4	1	1	1	1	1	1	1
5	1	1	1	1	1	1	1
6	1	1	1	1	1	1	1
7	1	1	1	1	1	1	1
8	1	1	1	1	1	1	1
9	1	1	1	1	1	1	1
10	1	1	1	1	2	2	1
11	1	1	1	1	2	2	2
12	1	1	1	1	2	2	2
13	1	1	1	2	2	2	2
14	1	1	2	2	2	2	2
15	2	2	2	2	2	1	2
16	2	2	2	2	2	1	1
17	2	2	2	2	2	1	1
18	1	1	1	1	2	1	1
19	1	1	1	1	1	1	1
20	1	1	1	1	1	1	1
21	1	1	1	1	1	1	1
22	1	1	1	1	1	1	1
23	1	1	1	1	1	1	1

LANES REQUIRED TO BE OPEN BY HOUR AND TIME OF DAY

FALL SEASON SEPTEMBER 16 THRU November 30

HR/DAY	MON	TUES	WEDS	THUR	FRI	SAT	SUN
0	1	1	1	1	1	1	1
1	1	1	1	1	1	1	1
2	1	1	1	1	1	1	1
3	1	1	1	1	1	1	1
4	1	1	1	1	1	1	1
5	1	1	1	1	1	1	1
6	1	1	1	1	1	1	1
7	1	1	1	1	1	1	1
8	1	1	1	1	1	1	1
9	1	1	1	1	1	1	1
10	1	1	1	1	1	1	1
11	1	1	1	1	1	1	1
12	1	1	1	1	2	1	2
13	1	1	1	1	2	1	2
14	1	1	2	1	2	1	2
15	2	2	2	2	2	1	2
16	2	2	2	2	2	1	2
17	2	2	2	2	2	1	1
18	1	1	1	1	2	1	1
19	1	1	1	1	1	1	1
20	1	1	1	1	1	1	1
21	1	1	1	1	1	1	1
22	1	1	1	1	1	1	1
23	1	1	1	1	1	1	1

WINTER SEAS. DECEMBER 1 THRU February 28

HR/DAY	MON	TUES	WEDS	THUR	FRI	SAT	SUN
0	1	1	1	1	1	1	1
1	1	1	1	1	1	1	1
2	1	1	1	1	1	1	1
3	1	1	1	1	1	1	1
4	1	1	1	1	1	1	1
5	1	1	1	1	1	1	1
6	1	1	1	1	1	1	1
7	1	1	1	1	1	1	1
8	1	1	1	1	1	1	1
9	1	1	1	1	1	1	1
10	1	1	1	1	1	1	1
11	1	1	1	1	1	1	1
12	1	1	1	1	1	1	1
13	1	1	1	1	1	1	1
14	1	1	1	1	2	1	1
15	1	2	2	2	2	1	1
16	2	2	2	2	2	1	1
17	2	2	1	2	2	1	1
18	1	1	1	1	1	1	1
19	1	1	1	1	1	1	1
20	1	1	1	1	1	1	1
21	1	1	1	1	1	1	1
22	1	1	1	1	1	1	1
23	1	1	1	1	1	1	1

I-90 EASTBOUND INTERCHANGES 26 TO 25A (1,300 VEH/HR/LANE)

LANES REQUIRED TO BE OPEN BY HOUR AND TIME OF DAY

SPRING SEASON MARCH 1 THRU MAY 20

HR/DAY	MON	TUES	WEDS	THUR	FRI	SAT	SUN
0	1	1	1	1	1	1	1
1	1	1	1	1	1	1	1
2	1	1	1	1	1	1	1
3	1	1	1	1	1	1	1
4	1	1	1	1	1	1	1
5	1	1	1	1	1	1	1
6	1	1	1	1	1	1	1
7	2	2	1	2	1	1	1
8	1	1	1	1	1	1	1
9	1	1	1	1	1	1	1
10	1	1	1	1	1	1	1
11	1	1	1	1	1	1	1
12	1	1	1	1	1	1	1
13	1	1	1	1	1	1	1
14	1	1	1	1	1	1	1
15	1	1	1	1	1	1	2
16	1	1	1	1	1	1	2
17	1	1	1	1	1	1	2
18	1	1	1	1	1	1	1
19	1	1	1	1	1	1	1
20	1	1	1	1	1	1	1
21	1	1	1	1	1	1	1
22	1	1	1	1	1	1	1
23	1	1	1	1	1	1	1

SUMMER SEASON MAY 21 THRU SEPTEMBER 15

HR/DAY	MON	TUES	WEDS	THUR	FRI	SAT	SUN
0	1	1	1	1	1	1	1
1	1	1	1	1	1	1	1
2	1	1	1	1	1	1	1
3	1	1	1	1	1	1	1
4	1	1	1	1	1	1	1
5	1	1	1	1	1	1	1
6	1	1	1	1	1	1	1
7	2	2	1	2	1	1	1
8	2	1	1	1	1	1	1
9	1	1	1	1	1	1	1
10	1	1	1	1	1	1	1
11	2	1	1	1	2	2	2
12	2	1	1	1	2	1	2
13	2	1	1	1	2	1	2
14	2	1	1	1	2	1	2
15	2	1	1	1	2	1	2
16	2	1	1	1	2	1	2
17	2	1	1	1	1	1	2
18	1	1	1	1	1	1	2
19	1	1	1	1	1	1	2
20	1	1	1	1	1	1	1
21	1	1	1	1	1	1	1
22	1	1	1	1	1	1	1
23	1	1	1	1	1	1	1

LANES REQUIRED TO BE OPEN BY HOUR AND TIME OF DAY

FALL SEASON SEPTEMBER 16 THRU November 30

HR/DAY	MON	TUES	WEDS	THUR	FRI	SAT	SUN
0	1	1	1	1	1	1	1
1	1	1	1	1	1	1	1
2	1	1	1	1	1	1	1
3	1	1	1	1	1	1	1
4	1	1	1	1	1	1	1
5	1	1	1	1	1	1	1
6	1	1	1	1	1	1	1
7	2	2	2	2	2	1	1
8	1	1	1	1	1	1	1
9	1	1	1	1	1	1	1
10	1	1	1	1	1	1	1
11	1	1	1	1	1	1	2
12	1	1	1	1	1	1	2
13	1	1	1	1	1	1	2
14	2	1	1	1	2	1	2
15	2	1	1	1	2	1	2
16	1	1	1	1	2	1	2
17	1	1	1	1	1	1	2
18	1	1	1	1	1	1	1
19	1	1	1	1	1	1	1
20	1	1	1	1	1	1	1
21	1	1	1	1	1	1	1
22	1	1	1	1	1	1	1
23	1	1	1	1	1	1	1

WINTER SEAS. DECEMBER 1 THRU February 28

HR/DAY	MON	TUES	WEDS	THUR	FRI	SAT	SUN
0	1	1	1	1	1	1	1
1	1	1	1	1	1	1	1
2	1	1	1	1	1	1	1
3	1	1	1	1	1	1	1
4	1	1	1	1	1	1	1
5	1	1	1	1	1	1	1
6	1	1	1	1	1	1	1
7	2	2	2	2	2	1	1
8	1	1	1	1	1	1	1
9	1	1	1	1	1	1	1
10	1	1	1	1	1	1	1
11	1	1	1	1	1	1	1
12	1	1	1	1	1	1	1
13	1	1	1	1	1	1	1
14	1	1	1	1	1	1	1
15	1	1	1	1	1	1	1
16	1	1	1	1	1	1	1
17	1	1	1	1	1	1	1
18	1	1	1	1	1	1	1
19	1	1	1	1	1	1	1
20	1	1	1	1	1	1	1
21	1	1	1	1	1	1	1
22	1	1	1	1	1	1	1
23	1	1	1	1	1	1	1

NOTES:

1) THE NEW YORK STATE THRUWAY IS A LIMITED ACCESS, HIGH-SPEED, HIGH-VOLUME HIGHWAY. TRAFFIC SHALL BE MAINTAINED IN ACCORDANCE WITH THE *MANUAL ON UNIFORM TRAFFIC CONTROL DEVICES (MUTCD)*, THE *WORK ZONE TRAFFIC CONTROL PLANS*, AND THE *STANDARD SPECIFICATIONS* SECTION 619 AS AMENDED BY THE AUTHORITY.

2) LANE CLOSURES ON THE THRUWAY SHALL ONLY BE ALLOWED IN ACCORDANCE WITH THESE TRAFFIC MANAGEMENT TABLE(S), UNLESS INDICATED OTHERWISE IN THE CONTRACT PLANS OR PROPOSAL DOCUMENTS.

3) LANE CLOSURE CHARTS SHALL APPLY AS FOLLOWS:

- 1,150 VEH/HR/LANE: APPLIES TO ALL WORK REQUIRING LANE CLOSURE(S) EXCEPT AS PERMITTED BELOW.

- 1,300 VEH/HR/LANE: APPLIES TO NON-EVASIVE WORK WHERE WORKERS AND/OR EQUIPMENT ARE LOCATED 4 FT. OR MORE FROM TRAVEL (SPACE) LANE, OR AS APPROVED BY THE THRUWAY PROJECT ENGINEER. WORK SHOULD BE ABLE TO BE IMMEDIATELY STOPPED AND LANE CLOSURE(S) REMOVED IN THE EVENT QUEUES, GREATER THAN 1 MILE, DEVELOP.

NEW YORK STATE OF OPPORTUNITY. Thruway Authority

U.S. CUSTOMARY STANDARD SHEET

LANE CLOSURE CHARTS
1,300 VEHICLES PER HOUR
ALBANY DIVISION
(SHEET 11 OF 18)

APPROVED SEPTEMBER 1, 2018

/S/ PATRICK THOMPSON, P.E.
DIRECTOR DESIGN SUPPORT SERVICES BUREAU

ISSUED UNDER DB 18-003

TA 619-35

I-90 WESTBOUND INTERCHANGES 26 TO 27 (1,300 VEH/HR/LANE)

LANES REQUIRED TO BE OPEN BY HOUR AND TIME OF DAY

SPRING SEASON MARCH 1 THRU MAY 20

HR/DAY	MON	TUES	WEDS	THUR	FRI	SAT	SUN
0	1	1	1	1	1	1	1
1	1	1	1	1	1	1	1
2	1	1	1	1	1	1	1
3	1	1	1	1	1	1	1
4	1	1	1	1	1	1	1
5	1	1	1	1	1	1	1
6	1	1	1	1	1	1	1
7	1	1	1	1	1	1	1
8	1	1	1	1	1	1	1
9	1	1	1	1	1	1	1
10	1	1	1	1	1	1	1
11	1	1	1	1	1	1	1
12	1	1	1	1	2	1	1
13	1	1	1	1	2	1	1
14	1	1	1	1	2	1	1
15	1	1	1	2	2	1	1
16	2	2	2	2	2	1	1
17	1	1	1	2	2	1	1
18	1	1	1	1	1	1	1
19	1	1	1	1	1	1	1
20	1	1	1	1	1	1	1
21	1	1	1	1	1	1	1
22	1	1	1	1	1	1	1
23	1	1	1	1	1	1	1

SUMMER SEASON MAY 21 THRU SEPTEMBER 15

HR/DAY	MON	TUES	WEDS	THUR	FRI	SAT	SUN
0	1	1	1	1	1	1	1
1	1	1	1	1	1	1	1
2	1	1	1	1	1	1	1
3	1	1	1	1	1	1	1
4	1	1	1	1	1	1	1
5	1	1	1	1	1	1	1
6	1	1	1	1	1	1	1
7	1	1	1	1	1	1	1
8	1	1	1	1	1	1	1
9	1	1	1	1	1	2	1
10	1	1	1	1	2	2	1
11	1	1	1	1	2	2	2
12	1	1	1	2	2	2	2
13	1	1	1	2	2	2	2
14	2	1	1	2	2	2	2
15	2	2	2	2	2	1	2
16	2	2	2	2	2	1	2
17	2	2	2	2	2	1	1
18	1	1	1	1	2	1	1
19	1	1	1	1	2	1	1
20	1	1	1	1	1	1	1
21	1	1	1	1	1	1	1
22	1	1	1	1	1	1	1
23	1	1	1	1	1	1	1

LANES REQUIRED TO BE OPEN BY HOUR AND TIME OF DAY

FALL SEASON SEPTEMBER 16 THRU November 30

HR/DAY	MON	TUES	WEDS	THUR	FRI	SAT	SUN
0	1	1	1	1	1	1	1
1	1	1	1	1	1	1	1
2	1	1	1	1	1	1	1
3	1	1	1	1	1	1	1
4	1	1	1	1	1	1	1
5	1	1	1	1	1	1	1
6	1	1	1	1	1	1	1
7	1	1	1	1	1	1	1
8	1	1	1	1	1	1	1
9	1	1	1	1	1	1	1
10	1	1	1	1	1	1	1
11	1	1	1	1	1	1	2
12	1	1	1	1	2	1	2
13	1	1	1	1	2	1	2
14	1	1	2	1	2	1	2
15	2	2	2	2	2	1	2
16	2	2	2	2	2	1	2
17	2	2	2	2	2	1	1
18	1	1	1	1	2	1	1
19	1	1	1	1	1	1	1
20	1	1	1	1	1	1	1
21	1	1	1	1	1	1	1
22	1	1	1	1	1	1	1
23	1	1	1	1	1	1	1

WINTER SEAS. DECEMBER 1 THRU February 28

HR/DAY	MON	TUES	WEDS	THUR	FRI	SAT	SUN
0	1	1	1	1	1	1	1
1	1	1	1	1	1	1	1
2	1	1	1	1	1	1	1
3	1	1	1	1	1	1	1
4	1	1	1	1	1	1	1
5	1	1	1	1	1	1	1
6	1	1	1	1	1	1	1
7	1	1	1	1	1	1	1
8	1	1	1	1	1	1	1
9	1	1	1	1	1	1	1
10	1	1	1	1	1	1	1
11	1	1	1	1	1	1	1
12	1	1	1	1	1	1	1
13	1	1	1	1	1	1	1
14	1	1	1	1	2	1	1
15	1	1	1	1	2	1	1
16	1	2	2	2	2	1	1
17	1	1	1	2	2	1	1
18	1	1	1	1	1	1	1
19	1	1	1	1	1	1	1
20	1	1	1	1	1	1	1
21	1	1	1	1	1	1	1
22	1	1	1	1	1	1	1
23	1	1	1	1	1	1	1

I-90 EASTBOUND INTERCHANGES 27 TO 26 (1,300 VEH/HR/LANE)

LANES REQUIRED TO BE OPEN BY HOUR AND TIME OF DAY

SPRING SEASON MARCH 1 THRU MAY 20

HR/DAY	MON	TUES	WEDS	THUR	FRI	SAT	SUN
0	1	1	1	1	1	1	1
1	1	1	1	1	1	1	1
2	1	1	1	1	1	1	1
3	1	1	1	1	1	1	1
4	1	1	1	1	1	1	1
5	1	1	1	1	1	1	1
6	1	1	1	1	1	1	1
7	1	1	1	1	1	1	1
8	1	1	1	1	1	1	1
9	1	1	1	1	1	1	1
10	1	1	1	1	1	1	1
11	1	1	1	1	1	1	1
12	1	1	1	1	1	1	1
13	1	1	1	1	1	1	1
14	1	1	1	1	1	1	2
15	1	1	1	1	2	1	2
16	1	1	1	1	2	1	2
17	1	1	1	1	1	1	2
18	1	1	1	1	1	1	2
19	1	1	1	1	1	1	1
20	1	1	1	1	1	1	1
21	1	1	1	1	1	1	1
22	1	1	1	1	1	1	1
23	1	1	1	1	1	1	1

SUMMER SEASON MAY 21 THRU SEPTEMBER 15

HR/DAY	MON	TUES	WEDS	THUR	FRI	SAT	SUN
0	1	1	1	1	1	1	1
1	1	1	1	1	1	1	1
2	1	1	1	1	1	1	1
3	1	1	1	1	1	1	1
4	1	1	1	1	1	1	1
5	1	1	1	1	1	1	1
6	1	1	1	1	1	1	1
7	2	1	1	1	1	1	1
8	1	1	1	1	1	1	1
9	1	1	1	1	1	1	1
10	1	1	1	1	1	1	1
11	2	1	1	1	2	2	2
12	2	1	1	1	2	2	2
13	2	1	1	1	2	1	2
14	2	1	1	1	2	1	2
15	2	1	1	1	2	1	2
16	2	1	1	1	2	1	2
17	2	1	1	1	2	1	2
18	1	1	1	1	1	1	2
19	1	1	1	1	1	1	2
20	1	1	1	1	1	1	1
21	1	1	1	1	1	1	1
22	1	1	1	1	1	1	1
23	1	1	1	1	1	1	1

LANES REQUIRED TO BE OPEN BY HOUR AND TIME OF DAY

FALL SEASON SEPTEMBER 16 THRU November 30

HR/DAY	MON	TUES	WEDS	THUR	FRI	SAT	SUN
0	1	1	1	1	1	1	1
1	1	1	1	1	1	1	1
2	1	1	1	1	1	1	1
3	1	1	1	1	1	1	1
4	1	1	1	1	1	1	1
5	1	1	1	1	1	1	1
6	1	1	1	1	1	1	1
7	1	1	1	2	1	1	1
8	1	1	1	1	1	1	1
9	1	1	1	1	1	1	1
10	1	1	1	1	1	1	1
11	1	1	1	1	1	1	2
12	2	1	1	1	2	1	2
13	2	1	1	1	2	1	2
14	2	1	1	1	2	1	2
15	2	1	1	1	2	1	2
16	2	1	1	1	2	1	2
17	1	1	1	1	2	1	2
18	1	1	1	1	1	1	2
19	1	1	1	1	1	1	1
20	1	1	1	1	1	1	1
21	1	1	1	1	1	1	1
22	1	1	1	1	1	1	1
23	1	1	1	1	1	1	1

WINTER SEAS. DECEMBER 1 THRU February 28

HR/DAY	MON	TUES	WEDS	THUR	FRI	SAT	SUN
0	1	1	1	1	1	1	1
1	1	1	1	1	1	1	1
2	1	1	1	1	1	1	1
3	1	1	1	1	1	1	1
4	1	1	1	1	1	1	1
5	1	1	1	1	1	1	1
6	1	1	1	1	1	1	1
7	1	1	1	1	1	1	1
8	1	1	1	1	1	1	1
9	1	1	1	1	1	1	1
10	1	1	1	1	1	1	1
11	1	1	1	1	1	1	1
12	1	1	1	1	1	1	1
13	1	1	1	1	1	1	1
14	1	1	1	1	1	1	1
15	1	1	1	1	1	1	1
16	1	1	1	1	1	1	1
17	1	1	1	1	1	1	1
18	1	1	1	1	1	1	1
19	1	1	1	1	1	1	1
20	1	1	1	1	1	1	1
21	1	1	1	1	1	1	1
22	1	1	1	1	1	1	1
23	1	1	1	1	1	1	1

NOTES:

1) THE NEW YORK STATE THRUWAY IS A LIMITED ACCESS, HIGH-SPEED, HIGH-VOLUME HIGHWAY. TRAFFIC SHALL BE MAINTAINED IN ACCORDANCE WITH THE *MANUAL ON UNIFORM TRAFFIC CONTROL DEVICES (MUTCD)*, THE *WORK ZONE TRAFFIC CONTROL PLANS*, AND THE *STANDARD SPECIFICATIONS* SECTION 619 AS AMENDED BY THE AUTHORITY.

2) LANE CLOSURES ON THE THRUWAY SHALL ONLY BE ALLOWED IN ACCORDANCE WITH THESE TRAFFIC MANAGEMENT TABLE(S), UNLESS INDICATED OTHERWISE IN THE CONTRACT PLANS OR PROPOSAL DOCUMENTS.

3) LANE CLOSURE CHARTS SHALL APPLY AS FOLLOWS:

- 1,150 VEH/HR/LANE: APPLIES TO ALL WORK REQUIRING LANE CLOSURE(S) EXCEPT AS PERMITTED BELOW.

- 1,300 VEH/HR/LANE: APPLIES TO NON-EVASIVE WORK WHERE WORKERS AND/OR EQUIPMENT ARE LOCATED 4 FT. OR MORE FROM TRAVEL (SPACE) LANE, OR AS APPROVED BY THE THRUWAY PROJECT ENGINEER. WORK SHOULD BE ABLE TO BE IMMEDIATELY STOPPED AND LANE CLOSURE(S) REMOVED IN THE EVENT QUEUES, GREATER THAN 1 MILE, DEVELOP.

NEW YORK STATE OF OPPORTUNITY. Thruway Authority

U.S. CUSTOMARY STANDARD SHEET

LANE CLOSURE CHARTS
1,300 VEHICLES PER HOUR
ALBANY DIVISION
(SHEET 12 OF 18)

APPROVED SEPTEMBER 1, 2018

/S/ PATRICK THOMPSON, P.E.
DIRECTOR DESIGN SUPPORT SERVICES BUREAU

ISSUED UNDER DB 18-003

TA 619-35

I-90 WESTBOUND INTERCHANGES 27 TO 28 (1,300 VEH/HR/LANE)

LANES REQUIRED TO BE OPEN BY HOUR AND TIME OF DAY

SPRING SEASON MARCH 1 THRU MAY 20

HR/DAY	MON	TUES	WEDS	THUR	FRI	SAT	SUN
0	1	1	1	1	1	1	1
1	1	1	1	1	1	1	1
2	1	1	1	1	1	1	1
3	1	1	1	1	1	1	1
4	1	1	1	1	1	1	1
5	1	1	1	1	1	1	1
6	1	1	1	1	1	1	1
7	1	1	1	1	1	1	1
8	1	1	1	1	1	1	1
9	1	1	1	1	1	1	1
10	1	1	1	1	1	1	1
11	1	1	1	1	1	1	1
12	1	1	1	1	1	1	1
13	1	1	1	1	2	1	1
14	1	1	1	1	2	1	1
15	1	1	1	1	2	1	1
16	1	1	1	1	2	1	1
17	1	1	1	1	2	1	1
18	1	1	1	1	1	1	1
19	1	1	1	1	1	1	1
20	1	1	1	1	1	1	1
21	1	1	1	1	1	1	1
22	1	1	1	1	1	1	1
23	1	1	1	1	1	1	1

SUMMER SEASON MAY 21 THRU SEPTEMBER 15

HR/DAY	MON	TUES	WEDS	THUR	FRI	SAT	SUN
0	1	1	1	1	1	1	1
1	1	1	1	1	1	1	1
2	1	1	1	1	1	1	1
3	1	1	1	1	1	1	1
4	1	1	1	1	1	1	1
5	1	1	1	1	1	1	1
6	1	1	1	1	1	1	1
7	1	1	1	1	1	1	1
8	1	1	1	1	1	1	1
9	1	1	1	1	1	1	1
10	1	1	1	1	2	2	1
11	1	1	1	1	2	2	2
12	1	1	1	1	2	2	2
13	1	1	1	1	2	2	2
14	2	1	1	1	2	1	2
15	1	1	1	2	2	1	2
16	1	1	1	2	2	1	2
17	1	1	1	1	2	1	1
18	1	1	1	1	2	1	1
19	1	1	1	1	1	1	1
20	1	1	1	1	1	1	1
21	1	1	1	1	1	1	1
22	1	1	1	1	1	1	1
23	1	1	1	1	1	1	1

LANES REQUIRED TO BE OPEN BY HOUR AND TIME OF DAY

FALL SEASON SEPTEMBER 16 THRU November 30

HR/DAY	MON	TUES	WEDS	THUR	FRI	SAT	SUN
0	1	1	1	1	1	1	1
1	1	1	1	1	1	1	1
2	1	1	1	1	1	1	1
3	1	1	1	1	1	1	1
4	1	1	1	1	1	1	1
5	1	1	1	1	1	1	1
6	1	1	1	1	1	1	1
7	1	1	1	1	1	1	1
8	1	1	1	1	1	1	1
9	1	1	1	1	1	1	1
10	1	1	1	1	1	1	1
11	1	1	1	1	1	1	2
12	1	1	1	1	1	1	2
13	1	1	1	1	2	1	2
14	1	1	2	1	2	1	2
15	1	1	2	1	2	1	2
16	1	1	2	1	2	1	2
17	1	1	1	1	2	1	1
18	1	1	1	1	1	1	1
19	1	1	1	1	1	1	1
20	1	1	1	1	1	1	1
21	1	1	1	1	1	1	1
22	1	1	1	1	1	1	1
23	1	1	1	1	1	1	1

WINTER SEAS. DECEMBER 1 THRU February 28

HR/DAY	MON	TUES	WEDS	THUR	FRI	SAT	SUN
0	1	1	1	1	1	1	1
1	1	1	1	1	1	1	1
2	1	1	1	1	1	1	1
3	1	1	1	1	1	1	1
4	1	1	1	1	1	1	1
5	1	1	1	1	1	1	1
6	1	1	1	1	1	1	1
7	1	1	1	1	1	1	1
8	1	1	1	1	1	1	1
9	1	1	1	1	1	1	1
10	1	1	1	1	1	1	1
11	1	1	1	1	1	1	1
12	1	1	1	1	1	1	1
13	1	1	1	1	1	1	1
14	1	1	1	1	1	1	1
15	1	1	1	1	2	1	1
16	1	1	1	1	2	1	1
17	1	1	1	1	1	1	1
18	1	1	1	1	1	1	1
19	1	1	1	1	1	1	1
20	1	1	1	1	1	1	1
21	1	1	1	1	1	1	1
22	1	1	1	1	1	1	1
23	1	1	1	1	1	1	1

I-90 EASTBOUND INTERCHANGES 28 TO 27 (1,300 VEH/HR/LANE)

LANES REQUIRED TO BE OPEN BY HOUR AND TIME OF DAY

SPRING SEASON MARCH 1 THRU MAY 20

HR/DAY	MON	TUES	WEDS	THUR	FRI	SAT	SUN
0	1	1	1	1	1	1	1
1	1	1	1	1	1	1	1
2	1	1	1	1	1	1	1
3	1	1	1	1	1	1	1
4	1	1	1	1	1	1	1
5	1	1	1	1	1	1	1
6	1	1	1	1	1	1	1
7	1	1	1	1	1	1	1
8	1	1	1	1	1	1	1
9	1	1	1	1	1	1	1
10	1	1	1	1	1	1	1
11	1	1	1	1	1	1	1
12	1	1	1	1	1	1	1
13	1	1	1	1	1	1	1
14	1	1	1	1	1	1	1
15	1	1	1	1	1	1	2
16	1	1	1	1	1	1	2
17	1	1	1	1	1	1	2
18	1	1	1	1	1	1	2
19	1	1	1	1	1	1	1
20	1	1	1	1	1	1	1
21	1	1	1	1	1	1	1
22	1	1	1	1	1	1	1
23	1	1	1	1	1	1	1

SUMMER SEASON MAY 21 THRU SEPTEMBER 15

HR/DAY	MON	TUES	WEDS	THUR	FRI	SAT	SUN
0	1	1	1	1	1	1	1
1	1	1	1	1	1	1	1
2	1	1	1	1	1	1	1
3	1	1	1	1	1	1	1
4	1	1	1	1	1	1	1
5	1	1	1	1	1	1	1
6	1	1	1	1	1	1	1
7	1	1	1	1	1	1	1
8	1	1	1	1	1	1	1
9	1	1	1	1	1	1	1
10	1	1	1	1	1	1	1
11	1	1	1	1	2	2	2
12	1	1	1	1	2	1	2
13	1	1	1	1	2	1	2
14	1	1	1	1	2	1	2
15	1	1	1	1	2	1	2
16	1	1	1	1	2	1	2
17	1	1	1	1	2	1	2
18	1	1	1	1	1	1	2
19	1	1	1	1	1	1	2
20	1	1	1	1	1	1	1
21	1	1	1	1	1	1	1
22	1	1	1	1	1	1	1
23	1	1	1	1	1	1	1

LANES REQUIRED TO BE OPEN BY HOUR AND TIME OF DAY

FALL SEASON SEPTEMBER 16 THRU November 30

HR/DAY	MON	TUES	WEDS	THUR	FRI	SAT	SUN
0	1	1	1	1	1	1	1
1	1	1	1	1	1	1	1
2	1	1	1	1	1	1	1
3	1	1	1	1	1	1	1
4	1	1	1	1	1	1	1
5	1	1	1	1	1	1	1
6	1	1	1	1	1	1	1
7	1	1	1	1	1	1	1
8	1	1	1	1	1	1	1
9	1	1	1	1	1	1	1
10	1	1	1	1	1	1	1
11	1	1	1	1	1	1	1
12	1	1	1	1	1	1	2
13	1	1	1	1	1	1	2
14	1	1	1	1	2	1	2
15	1	1	1	1	2	1	2
16	1	1	1	1	2	1	2
17	1	1	1	1	2	1	2
18	1	1	1	1	1	1	2
19	1	1	1	1	1	1	1
20	1	1	1	1	1	1	1
21	1	1	1	1	1	1	1
22	1	1	1	1	1	1	1
23	1	1	1	1	1	1	1

WINTER SEAS. DECEMBER 1 THRU February 28

HR/DAY	MON	TUES	WEDS	THUR	FRI	SAT	SUN
0	1	1	1	1	1	1	1
1	1	1	1	1	1	1	1
2	1	1	1	1	1	1	1
3	1	1	1	1	1	1	1
4	1	1	1	1	1	1	1
5	1	1	1	1	1	1	1
6	1	1	1	1	1	1	1
7	1	1	1	1	1	1	1
8	1	1	1	1	1	1	1
9	1	1	1	1	1	1	1
10	1	1	1	1	1	1	1
11	1	1	1	1	1	1	1
12	1	1	1	1	1	1	1
13	1	1	1	1	1	1	1
14	1	1	1	1	1	1	1
15	1	1	1	1	1	1	1
16	1	1	1	1	1	1	1
17	1	1	1	1	1	1	1
18	1	1	1	1	1	1	1
19	1	1	1	1	1	1	1
20	1	1	1	1	1	1	1
21	1	1	1	1	1	1	1
22	1	1	1	1	1	1	1
23	1	1	1	1	1	1	1

NOTES:

1) THE NEW YORK STATE THRUWAY IS A LIMITED ACCESS, HIGH-SPEED, HIGH-VOLUME HIGHWAY. TRAFFIC SHALL BE MAINTAINED IN ACCORDANCE WITH THE *MANUAL ON UNIFORM TRAFFIC CONTROL DEVICES (MUTCD)*, THE *WORK ZONE TRAFFIC CONTROL PLANS*, AND THE *STANDARD SPECIFICATIONS* SECTION 619 AS AMENDED BY THE AUTHORITY.

2) LANE CLOSURES ON THE THRUWAY SHALL ONLY BE ALLOWED IN ACCORDANCE WITH THESE TRAFFIC MANAGEMENT TABLE(S), UNLESS INDICATED OTHERWISE IN THE CONTRACT PLANS OR PROPOSAL DOCUMENTS.

3) LANE CLOSURE CHARTS SHALL APPLY AS FOLLOWS:

- 1,150 VEH/HR/LANE: APPLIES TO ALL WORK REQUIRING LANE CLOSURE(S) EXCEPT AS PERMITTED BELOW.

- 1,300 VEH/HR/LANE: APPLIES TO NON-EVASIVE WORK WHERE WORKERS AND/OR EQUIPMENT ARE LOCATED 4 FT. OR MORE FROM TRAVEL (SPACE) LANE, OR AS APPROVED BY THE THRUWAY PROJECT ENGINEER. WORK SHOULD BE ABLE TO BE IMMEDIATELY STOPPED AND LANE CLOSURE(S) REMOVED IN THE EVENT QUEUES, GREATER THAN 1 MILE, DEVELOP.

NEW YORK STATE OF OPPORTUNITY. Thruway Authority

U.S. CUSTOMARY STANDARD SHEET

LANE CLOSURE CHARTS
1,300 VEHICLES PER HOUR
ALBANY DIVISION
(SHEET 13 OF 18)

APPROVED SEPTEMBER 1, 2018

/S/ PATRICK THOMPSON, P.E.
DIRECTOR DESIGN SUPPORT SERVICES BUREAU

ISSUED UNDER DB 18-003

TA 619-35

I-90 WESTBOUND INTERCHANGES 28 TO 29 (1,300 VEH/HR/LANE)

LANES REQUIRED TO BE OPEN BY HOUR AND TIME OF DAY

SPRING SEASON MARCH 1 THRU MAY 20

HR/DAY	MON	TUES	WEDS	THUR	FRI	SAT	SUN
0	1	1	1	1	1	1	1
1	1	1	1	1	1	1	1
2	1	1	1	1	1	1	1
3	1	1	1	1	1	1	1
4	1	1	1	1	1	1	1
5	1	1	1	1	1	1	1
6	1	1	1	1	1	1	1
7	1	1	1	1	1	1	1
8	1	1	1	1	1	1	1
9	1	1	1	1	1	1	1
10	1	1	1	1	1	1	1
11	1	1	1	1	1	1	1
12	1	1	1	1	1	1	1
13	1	1	1	1	1	1	1
14	1	1	1	1	2	1	1
15	1	1	1	1	2	1	1
16	1	1	1	1	2	1	1
17	1	1	1	1	2	1	1
18	1	1	1	1	1	1	1
19	1	1	1	1	1	1	1
20	1	1	1	1	1	1	1
21	1	1	1	1	1	1	1
22	1	1	1	1	1	1	1
23	1	1	1	1	1	1	1

SUMMER SEASON MAY 21 THRU SEPTEMBER 15

HR/DAY	MON	TUES	WEDS	THUR	FRI	SAT	SUN
0	1	1	1	1	1	1	1
1	1	1	1	1	1	1	1
2	1	1	1	1	1	1	1
3	1	1	1	1	1	1	1
4	1	1	1	1	1	1	1
5	1	1	1	1	1	1	1
6	1	1	1	1	1	1	1
7	1	1	1	1	1	1	1
8	1	1	1	1	1	1	1
9	1	1	1	1	1	1	1
10	1	1	1	1	1	2	1
11	1	1	1	1	2	2	2
12	1	1	1	1	2	2	2
13	1	1	1	1	2	2	2
14	1	1	1	1	2	1	2
15	1	1	1	1	2	1	2
16	1	1	1	1	2	1	2
17	1	1	1	1	2	1	1
18	1	1	1	1	2	1	1
19	1	1	1	1	1	1	1
20	1	1	1	1	1	1	1
21	1	1	1	1	1	1	1
22	1	1	1	1	1	1	1
23	1	1	1	1	1	1	1

LANES REQUIRED TO BE OPEN BY HOUR AND TIME OF DAY

FALL SEASON SEPTEMBER 16 THRU November 30

HR/DAY	MON	TUES	WEDS	THUR	FRI	SAT	SUN
0	1	1	1	1	1	1	1
1	1	1	1	1	1	1	1
2	1	1	1	1	1	1	1
3	1	1	1	1	1	1	1
4	1	1	1	1	1	1	1
5	1	1	1	1	1	1	1
6	1	1	1	1	1	1	1
7	1	1	1	1	1	1	1
8	1	1	1	1	1	1	1
9	1	1	1	1	1	1	1
10	1	1	1	1	1	1	1
11	1	1	1	1	1	1	2
12	1	1	1	1	1	1	2
13	1	1	1	1	2	1	2
14	1	1	1	1	2	1	2
15	1	1	2	1	2	1	2
16	1	1	2	1	2	1	2
17	1	1	1	1	2	1	2
18	1	1	1	1	1	1	1
19	1	1	1	1	1	1	1
20	1	1	1	1	1	1	1
21	1	1	1	1	1	1	1
22	1	1	1	1	1	1	1
23	1	1	1	1	1	1	1

WINTER SEAS. DECEMBER 1 THRU February 28

HR/DAY	MON	TUES	WEDS	THUR	FRI	SAT	SUN
0	1	1	1	1	1	1	1
1	1	1	1	1	1	1	1
2	1	1	1	1	1	1	1
3	1	1	1	1	1	1	1
4	1	1	1	1	1	1	1
5	1	1	1	1	1	1	1
6	1	1	1	1	1	1	1
7	1	1	1	1	1	1	1
8	1	1	1	1	1	1	1
9	1	1	1	1	1	1	1
10	1	1	1	1	1	1	1
11	1	1	1	1	1	1	1
12	1	1	1	1	1	1	1
13	1	1	1	1	1	1	1
14	1	1	1	1	1	1	1
15	1	1	1	1	2	1	1
16	1	1	1	1	2	1	1
17	1	1	1	1	1	1	1
18	1	1	1	1	1	1	1
19	1	1	1	1	1	1	1
20	1	1	1	1	1	1	1
21	1	1	1	1	1	1	1
22	1	1	1	1	1	1	1
23	1	1	1	1	1	1	1

I-90 EASTBOUND INTERCHANGES 29 TO 28 (1,300 VEH/HR/LANE)

LANES REQUIRED TO BE OPEN BY HOUR AND TIME OF DAY

SPRING SEASON MARCH 1 THRU MAY 20

HR/DAY	MON	TUES	WEDS	THUR	FRI	SAT	SUN
0	1	1	1	1	1	1	1
1	1	1	1	1	1	1	1
2	1	1	1	1	1	1	1
3	1	1	1	1	1	1	1
4	1	1	1	1	1	1	1
5	1	1	1	1	1	1	1
6	1	1	1	1	1	1	1
7	1	1	1	1	1	1	1
8	1	1	1	1	1	1	1
9	1	1	1	1	1	1	1
10	1	1	1	1	1	1	1
11	1	1	1	1	1	1	1
12	1	1	1	1	1	1	1
13	1	1	1	1	1	1	1
14	1	1	1	1	1	1	1
15	1	1	1	1	1	1	2
16	1	1	1	1	1	1	2
17	1	1	1	1	1	1	2
18	1	1	1	1	1	1	1
19	1	1	1	1	1	1	1
20	1	1	1	1	1	1	1
21	1	1	1	1	1	1	1
22	1	1	1	1	1	1	1
23	1	1	1	1	1	1	1

SUMMER SEASON MAY 21 THRU SEPTEMBER 15

HR/DAY	MON	TUES	WEDS	THUR	FRI	SAT	SUN
0	1	1	1	1	1	1	1
1	1	1	1	1	1	1	1
2	1	1	1	1	1	1	1
3	1	1	1	1	1	1	1
4	1	1	1	1	1	1	1
5	1	1	1	1	1	1	1
6	1	1	1	1	1	1	1
7	1	1	1	1	1	1	1
8	1	1	1	1	1	1	1
9	1	1	1	1	1	1	1
10	1	1	1	1	1	1	1
11	1	1	1	1	2	1	2
12	2	1	1	1	1	1	2
13	2	1	1	1	1	1	2
14	2	1	1	1	2	1	2
15	1	1	1	1	2	1	2
16	1	1	1	1	2	1	2
17	1	1	1	1	1	1	2
18	1	1	1	1	1	1	2
19	1	1	1	1	1	1	1
20	1	1	1	1	1	1	1
21	1	1	1	1	1	1	1
22	1	1	1	1	1	1	1
23	1	1	1	1	1	1	1

LANES REQUIRED TO BE OPEN BY HOUR AND TIME OF DAY

FALL SEASON SEPTEMBER 16 THRU November 30

HR/DAY	MON	TUES	WEDS	THUR	FRI	SAT	SUN
0	1	1	1	1	1	1	1
1	1	1	1	1	1	1	1
2	1	1	1	1	1	1	1
3	1	1	1	1	1	1	1
4	1	1	1	1	1	1	1
5	1	1	1	1	1	1	1
6	1	1	1	1	1	1	1
7	1	1	1	1	1	1	1
8	1	1	1	1	1	1	1
9	1	1	1	1	1	1	1
10	1	1	1	1	1	1	1
11	1	1	1	1	1	1	2
12	1	1	1	1	1	1	2
13	1	1	1	1	1	1	2
14	1	1	1	1	1	1	2
15	1	1	1	1	1	1	2
16	1	1	1	1	1	1	2
17	1	1	1	1	1	1	2
18	1	1	1	1	1	1	1
19	1	1	1	1	1	1	1
20	1	1	1	1	1	1	1
21	1	1	1	1	1	1	1
22	1	1	1	1	1	1	1
23	1	1	1	1	1	1	1

WINTER SEAS. DECEMBER 1 THRU February 28

HR/DAY	MON	TUES	WEDS	THUR	FRI	SAT	SUN
0	1	1	1	1	1	1	1
1	1	1	1	1	1	1	1
2	1	1	1	1	1	1	1
3	1	1	1	1	1	1	1
4	1	1	1	1	1	1	1
5	1	1	1	1	1	1	1
6	1	1	1	1	1	1	1
7	1	1	1	1	1	1	1
8	1	1	1	1	1	1	1
9	1	1	1	1	1	1	1
10	1	1	1	1	1	1	1
11	1	1	1	1	1	1	1
12	1	1	1	1	1	1	1
13	1	1	1	1	1	1	1
14	1	1	1	1	1	1	1
15	1	1	1	1	1	1	1
16	1	1	1	1	1	1	1
17	1	1	1	1	1	1	1
18	1	1	1	1	1	1	1
19	1	1	1	1	1	1	1
20	1	1	1	1	1	1	1
21	1	1	1	1	1	1	1
22	1	1	1	1	1	1	1
23	1	1	1	1	1	1	1

NOTES:

1) THE NEW YORK STATE THRUWAY IS A LIMITED ACCESS, HIGH-SPEED, HIGH-VOLUME HIGHWAY. TRAFFIC SHALL BE MAINTAINED IN ACCORDANCE WITH THE *MANUAL ON UNIFORM TRAFFIC CONTROL DEVICES (MUTCD)*, THE *WORK ZONE TRAFFIC CONTROL PLANS*, AND THE *STANDARD SPECIFICATIONS* SECTION 619 AS AMENDED BY THE AUTHORITY.

2) LANE CLOSURES ON THE THRUWAY SHALL ONLY BE ALLOWED IN ACCORDANCE WITH THESE TRAFFIC MANAGEMENT TABLE(S), UNLESS INDICATED OTHERWISE IN THE CONTRACT PLANS OR PROPOSAL DOCUMENTS.

3) LANE CLOSURE CHARTS SHALL APPLY AS FOLLOWS:

- 1,150 VEH/HR/LANE: APPLIES TO ALL WORK REQUIRING LANE CLOSURE(S) EXCEPT AS PERMITTED BELOW.

- 1,300 VEH/HR/LANE: APPLIES TO NON-EVASIVE WORK WHERE WORKERS AND/OR EQUIPMENT ARE LOCATED 4 FT. OR MORE FROM TRAVEL (SPACE) LANE, OR AS APPROVED BY THE THRUWAY PROJECT ENGINEER. WORK SHOULD BE ABLE TO BE IMMEDIATELY STOPPED AND LANE CLOSURE(S) REMOVED IN THE EVENT QUEUES, GREATER THAN 1 MILE, DEVELOP.

NEW YORK STATE OF OPPORTUNITY. Thruway Authority

U.S. CUSTOMARY STANDARD SHEET

LANE CLOSURE CHARTS
1,300 VEHICLES PER HOUR
ALBANY DIVISION
(SHEET 14 OF 18)

APPROVED SEPTEMBER 1, 2018

/S/ PATRICK THOMPSON, P.E.
DIRECTOR DESIGN SUPPORT SERVICES BUREAU

ISSUED UNDER DB 18-003

TA 619-35

BERKSHIRE: NYS 912M WESTBOUND INTERCHANGES B1 TO 21A (1,300 VEH/HR/LANE)

LANES REQUIRED TO BE OPEN BY HOUR AND TIME OF DAY

SPRING SEASON MARCH 1 THRU MAY 20

HR/DAY	MON	TUES	WEDS	THUR	FRI	SAT	SUN
0	1	1	1	1	1	1	1
1	1	1	1	1	1	1	1
2	1	1	1	1	1	1	1
3	1	1	1	1	1	1	1
4	1	1	1	1	1	1	1
5	1	1	1	1	1	1	1
6	1	1	1	1	1	1	1
7	1	1	1	1	1	1	1
8	1	1	1	1	1	1	1
9	1	1	1	1	1	1	1
10	1	1	1	1	1	1	1
11	1	1	1	1	1	1	1
12	1	1	1	1	1	1	1
13	1	1	1	1	1	1	1
14	1	1	1	1	1	1	1
15	1	1	1	1	1	1	1
16	1	1	1	1	1	1	1
17	1	1	1	1	1	1	1
18	1	1	1	1	1	1	1
19	1	1	1	1	1	1	1
20	1	1	1	1	1	1	1
21	1	1	1	1	1	1	1
22	1	1	1	1	1	1	1
23	1	1	1	1	1	1	1

SUMMER SEASON MAY 21 THRU SEPTEMBER 15

HR/DAY	MON	TUES	WEDS	THUR	FRI	SAT	SUN
0	1	1	1	1	1	1	1
1	1	1	1	1	1	1	1
2	1	1	1	1	1	1	1
3	1	1	1	1	1	1	1
4	1	1	1	1	1	1	1
5	1	1	1	1	1	1	1
6	1	1	1	1	1	1	1
7	1	1	1	1	1	1	1
8	1	1	1	1	1	1	1
9	1	1	1	1	1	1	1
10	1	1	1	1	1	1	1
11	1	1	1	1	1	1	1
12	1	1	1	1	1	1	1
13	1	1	1	1	1	1	1
14	1	1	1	1	1	1	1
15	1	1	1	1	1	1	1
16	1	1	1	1	1	1	1
17	1	1	1	1	1	1	1
18	1	1	1	1	1	1	1
19	1	1	1	1	1	1	1
20	1	1	1	1	1	1	1
21	1	1	1	1	1	1	1
22	1	1	1	1	1	1	1
23	1	1	1	1	1	1	1

LANES REQUIRED TO BE OPEN BY HOUR AND TIME OF DAY

FALL SEASON SEPTEMBER 16 THRU November 30

HR/DAY	MON	TUES	WEDS	THUR	FRI	SAT	SUN
0	1	1	1	1	1	1	1
1	1	1	1	1	1	1	1
2	1	1	1	1	1	1	1
3	1	1	1	1	1	1	1
4	1	1	1	1	1	1	1
5	1	1	1	1	1	1	1
6	1	1	1	1	1	1	1
7	1	1	1	1	1	1	1
8	1	1	1	1	1	1	1
9	1	1	1	1	1	1	1
10	1	1	1	1	1	1	1
11	1	1	1	1	1	1	1
12	1	1	1	1	1	1	1
13	1	1	1	1	1	1	1
14	1	1	1	1	1	1	1
15	1	1	1	1	1	1	1
16	1	1	1	1	1	1	1
17	1	1	1	1	1	1	1
18	1	1	1	1	1	1	1
19	1	1	1	1	1	1	1
20	1	1	1	1	1	1	1
21	1	1	1	1	1	1	1
22	1	1	1	1	1	1	1
23	1	1	1	1	1	1	1

WINTER SEAS. DECEMBER 1 THRU February 28

HR/DAY	MON	TUES	WEDS	THUR	FRI	SAT	SUN
0	1	1	1	1	1	1	1
1	1	1	1	1	1	1	1
2	1	1	1	1	1	1	1
3	1	1	1	1	1	1	1
4	1	1	1	1	1	1	1
5	1	1	1	1	1	1	1
6	1	1	1	1	1	1	1
7	1	1	1	1	1	1	1
8	1	1	1	1	1	1	1
9	1	1	1	1	1	1	1
10	1	1	1	1	1	1	1
11	1	1	1	1	1	1	1
12	1	1	1	1	1	1	1
13	1	1	1	1	1	1	1
14	1	1	1	1	1	1	1
15	1	1	1	1	1	1	1
16	1	1	1	1	1	1	1
17	1	1	1	1	1	1	1
18	1	1	1	1	1	1	1
19	1	1	1	1	1	1	1
20	1	1	1	1	1	1	1
21	1	1	1	1	1	1	1
22	1	1	1	1	1	1	1
23	1	1	1	1	1	1	1

BERKSHIRE: NYS 912M EASTBOUND INTERCHANGES 21A TO B1 (1,300 VEH/HR/LANE)

LANES REQUIRED TO BE OPEN BY HOUR AND TIME OF DAY

SPRING SEASON MARCH 1 THRU MAY 20

HR/DAY	MON	TUES	WEDS	THUR	FRI	SAT	SUN
0	1	1	1	1	1	1	1
1	1	1	1	1	1	1	1
2	1	1	1	1	1	1	1
3	1	1	1	1	1	1	1
4	1	1	1	1	1	1	1
5	1	1	1	1	1	1	1
6	1	1	1	1	1	1	1
7	1	1	1	1	1	1	1
8	1	1	1	1	1	1	1
9	1	1	1	1	1	1	1
10	1	1	1	1	1	1	1
11	1	1	1	1	1	1	1
12	1	1	1	1	1	1	1
13	1	1	1	1	1	1	1
14	1	1	1	1	1	1	1
15	1	1	1	1	1	1	1
16	1	1	1	1	1	1	1
17	1	1	1	1	1	1	1
18	1	1	1	1	1	1	1
19	1	1	1	1	1	1	1
20	1	1	1	1	1	1	1
21	1	1	1	1	1	1	1
22	1	1	1	1	1	1	1
23	1	1	1	1	1	1	1

SUMMER SEASON MAY 21 THRU SEPTEMBER 15

HR/DAY	MON	TUES	WEDS	THUR	FRI	SAT	SUN
0	1	1	1	1	1	1	1
1	1	1	1	1	1	1	1
2	1	1	1	1	1	1	1
3	1	1	1	1	1	1	1
4	1	1	1	1	1	1	1
5	1	1	1	1	1	1	1
6	1	1	1	1	1	1	1
7	1	1	1	1	1	1	1
8	1	1	1	1	1	1	1
9	1	1	1	1	1	1	1
10	1	1	1	1	1	1	1
11	1	1	1	1	1	1	1
12	1	1	1	1	1	1	1
13	1	1	1	1	1	1	1
14	1	1	1	1	1	1	1
15	1	1	1	1	1	1	1
16	1	1	1	1	1	1	1
17	1	1	1	1	1	1	1
18	1	1	1	1	1	1	1
19	1	1	1	1	1	1	1
20	1	1	1	1	1	1	1
21	1	1	1	1	1	1	1
22	1	1	1	1	1	1	1
23	1	1	1	1	1	1	1

LANES REQUIRED TO BE OPEN BY HOUR AND TIME OF DAY

FALL SEASON SEPTEMBER 16 THRU November 30

HR/DAY	MON	TUES	WEDS	THUR	FRI	SAT	SUN
0	1	1	1	1	1	1	1
1	1	1	1	1	1	1	1
2	1	1	1	1	1	1	1
3	1	1	1	1	1	1	1
4	1	1	1	1	1	1	1
5	1	1	1	1	1	1	1
6	1	1	1	1	1	1	1
7	1	1	1	1	1	1	1
8	1	1	1	1	1	1	1
9	1	1	1	1	1	1	1
10	1	1	1	1	1	1	1
11	1	1	1	1	1	1	1
12	1	1	1	1	1	1	1
13	1	1	1	1	1	1	1
14	1	1	1	1	1	1	1
15	1	1	1	1	1	1	1
16	1	1	1	1	1	1	1
17	1	1	1	1	1	1	1
18	1	1	1	1	1	1	1
19	1	1	1	1	1	1	1
20	1	1	1	1	1	1	1
21	1	1	1	1	1	1	1
22	1	1	1	1	1	1	1
23	1	1	1	1	1	1	1

WINTER SEAS. DECEMBER 1 THRU February 28

HR/DAY	MON	TUES	WEDS	THUR	FRI	SAT	SUN
0	1	1	1	1	1	1	1
1	1	1	1	1	1	1	1
2	1	1	1	1	1	1	1
3	1	1	1	1	1	1	1
4	1	1	1	1	1	1	1
5	1	1	1	1	1	1	1
6	1	1	1	1	1	1	1
7	1	1	1	1	1	1	1
8	1	1	1	1	1	1	1
9	1	1	1	1	1	1	1
10	1	1	1	1	1	1	1
11	1	1	1	1	1	1	1
12	1	1	1	1	1	1	1
13	1	1	1	1	1	1	1
14	1	1	1	1	1	1	1
15	1	1	1	1	1	1	1
16	1	1	1	1	1	1	1
17	1	1	1	1	1	1	1
18	1	1	1	1	1	1	1
19	1	1	1	1	1	1	1
20	1	1	1	1	1	1	1
21	1	1	1	1	1	1	1
22	1	1	1	1	1	1	1
23	1	1	1	1	1	1	1

NOTES:

1) THE NEW YORK STATE THRUWAY IS A LIMITED ACCESS, HIGH-SPEED, HIGH-VOLUME HIGHWAY. TRAFFIC SHALL BE MAINTAINED IN ACCORDANCE WITH THE *MANUAL ON UNIFORM TRAFFIC CONTROL DEVICES (MUTCD)*, THE *WORK ZONE TRAFFIC CONTROL PLANS*, AND THE *STANDARD SPECIFICATIONS* SECTION 619 AS AMENDED BY THE AUTHORITY.

2) LANE CLOSURES ON THE THRUWAY SHALL ONLY BE ALLOWED IN ACCORDANCE WITH THESE TRAFFIC MANAGEMENT TABLE(S), UNLESS INDICATED OTHERWISE IN THE CONTRACT PLANS OR PROPOSAL DOCUMENTS.

3) LANE CLOSURE CHARTS SHALL APPLY AS FOLLOWS:

- 1,150 VEH/HR/LANE: APPLIES TO ALL WORK REQUIRING LANE CLOSURE(S) EXCEPT AS PERMITTED BELOW.

- 1,300 VEH/HR/LANE: APPLIES TO NON-EVASIVE WORK WHERE WORKERS AND/OR EQUIPMENT ARE LOCATED 4 FT. OR MORE FROM TRAVEL (SPACE) LANE, OR AS APPROVED BY THE THRUWAY PROJECT ENGINEER. WORK SHOULD BE ABLE TO BE IMMEDIATELY STOPPED AND LANE CLOSURE(S) REMOVED IN THE EVENT QUEUES, GREATER THAN 1 MILE, DEVELOP.

NEW YORK STATE OF OPPORTUNITY. Thruway Authority

U.S. CUSTOMARY STANDARD SHEET

LANE CLOSURE CHARTS
1,300 VEHICLES PER HOUR
ALBANY DIVISION
(SHEET 15 OF 18)

APPROVED SEPTEMBER 1, 2018

/S/ PATRICK THOMPSON, P.E.
DIRECTOR DESIGN SUPPORT SERVICES BUREAU

ISSUED UNDER DB 18-003

TA 619-35

BERKSHIRE: I-90 WESTBOUND INTERCHANGES B2 TO B1 (1,300 VEH/HR/LANE)

LANES REQUIRED TO BE OPEN BY HOUR AND TIME OF DAY

SPRING SEASON MARCH 1 THRU MAY 20

HR/DAY	MON	TUES	WEDS	THUR	FRI	SAT	SUN
0	1	1	1	1	1	1	1
1	1	1	1	1	1	1	1
2	1	1	1	1	1	1	1
3	1	1	1	1	1	1	1
4	1	1	1	1	1	1	1
5	1	1	1	1	1	1	1
6	1	1	1	1	1	1	1
7	1	1	1	1	1	1	1
8	1	1	1	1	1	1	1
9	1	1	1	1	1	1	1
10	1	1	1	1	1	1	1
11	1	1	1	1	1	1	1
12	1	1	1	1	1	1	1
13	1	1	1	1	2	1	1
14	1	1	1	1	2	1	1
15	1	1	1	1	2	1	2
16	1	1	1	1	2	1	2
17	1	1	1	1	2	1	2
18	1	1	1	1	1	1	1
19	1	1	1	1	1	1	1
20	1	1	1	1	1	1	1
21	1	1	1	1	1	1	1
22	1	1	1	1	1	1	1
23	1	1	1	1	1	1	1

SUMMER SEASON MAY 21 THRU SEPTEMBER 15

HR/DAY	MON	TUES	WEDS	THUR	FRI	SAT	SUN
0	1	1	1	1	1	1	1
1	1	1	1	1	1	1	1
2	1	1	1	1	1	1	1
3	1	1	1	1	1	1	1
4	1	1	1	1	1	1	1
5	1	1	1	1	1	1	1
6	1	1	1	1	1	1	1
7	1	1	1	1	1	1	1
8	1	1	1	1	1	1	1
9	1	1	1	1	1	2	1
10	1	1	1	1	2	2	2
11	2	1	1	2	2	2	2
12	2	1	1	2	2	2	2
13	2	1	1	2	2	2	2
14	2	1	1	2	2	2	2
15	2	1	1	2	2	2	2
16	1	1	1	2	2	2	2
17	1	1	1	2	2	1	2
18	1	1	1	1	2	1	2
19	1	1	1	1	2	1	1
20	1	1	1	1	2	1	1
21	1	1	1	1	1	1	1
22	1	1	1	1	1	1	1
23	1	1	1	1	1	1	1

LANES REQUIRED TO BE OPEN BY HOUR AND TIME OF DAY

FALL SEASON SEPTEMBER 16 THRU November 30

HR/DAY	MON	TUES	WEDS	THUR	FRI	SAT	SUN
0	1	1	1	1	1	1	1
1	1	1	1	1	1	1	1
2	1	1	1	1	1	1	1
3	1	1	1	1	1	1	1
4	1	1	1	1	1	1	1
5	1	1	1	1	1	1	1
6	1	1	1	1	1	1	1
7	1	1	1	1	1	1	1
8	1	1	1	1	1	1	1
9	1	1	1	1	1	1	1
10	1	1	1	1	1	1	1
11	1	1	1	1	2	2	2
12	1	1	1	1	2	1	2
13	1	1	1	1	2	1	2
14	1	1	1	1	2	1	2
15	1	1	1	1	2	1	2
16	1	1	1	1	2	1	2
17	1	1	1	1	2	1	2
18	1	1	1	1	2	1	2
19	1	1	1	1	2	1	1
20	1	1	1	1	1	1	1
21	1	1	1	1	1	1	1
22	1	1	1	1	1	1	1
23	1	1	1	1	1	1	1

WINTER SEAS. DECEMBER 1 THRU February 28

HR/DAY	MON	TUES	WEDS	THUR	FRI	SAT	SUN
0	1	1	1	1	1	1	1
1	1	1	1	1	1	1	1
2	1	1	1	1	1	1	1
3	1	1	1	1	1	1	1
4	1	1	1	1	1	1	1
5	1	1	1	1	1	1	1
6	1	1	1	1	1	1	1
7	1	1	1	1	1	1	1
8	1	1	1	1	1	1	1
9	1	1	1	1	1	1	1
10	1	1	1	1	1	1	1
11	1	1	1	1	1	1	1
12	1	1	1	1	1	1	1
13	1	1	1	1	1	1	1
14	1	1	1	1	1	1	1
15	1	1	1	1	2	1	1
16	1	1	1	1	2	1	1
17	1	1	1	1	1	1	1
18	1	1	1	1	1	1	1
19	1	1	1	1	1	1	1
20	1	1	1	1	1	1	1
21	1	1	1	1	1	1	1
22	1	1	1	1	1	1	1
23	1	1	1	1	1	1	1

BERKSHIRE: I-90 EASTBOUND INTERCHANGES B1 TO B2 (1,300 VEH/HR/LANE)

LANES REQUIRED TO BE OPEN BY HOUR AND TIME OF DAY

SPRING SEASON MARCH 1 THRU MAY 20

HR/DAY	MON	TUES	WEDS	THUR	FRI	SAT	SUN
0	1	1	1	1	1	1	1
1	1	1	1	1	1	1	1
2	1	1	1	1	1	1	1
3	1	1	1	1	1	1	1
4	1	1	1	1	1	1	1
5	1	1	1	1	1	1	1
6	1	1	1	1	1	1	1
7	1	1	1	1	1	1	1
8	1	1	1	1	1	1	1
9	1	1	1	1	1	1	1
10	1	1	1	1	1	1	1
11	1	1	1	1	1	1	1
12	1	1	1	1	1	1	1
13	1	1	1	1	2	1	2
14	1	1	1	1	2	1	2
15	1	1	1	1	2	1	2
16	1	1	1	1	2	1	2
17	1	1	1	1	1	1	2
18	1	1	1	1	1	1	2
19	1	1	1	1	1	1	1
20	1	1	1	1	1	1	1
21	1	1	1	1	1	1	1
22	1	1	1	1	1	1	1
23	1	1	1	1	1	1	1

SUMMER SEASON MAY 21 THRU SEPTEMBER 15

HR/DAY	MON	TUES	WEDS	THUR	FRI	SAT	SUN
0	1	1	1	1	1	1	1
1	1	1	1	1	1	1	1
2	1	1	1	1	1	1	1
3	1	1	1	1	1	1	1
4	1	1	1	1	1	1	1
5	1	1	1	1	1	1	1
6	1	1	1	1	1	1	1
7	1	1	1	1	1	1	1
8	1	1	1	1	1	1	1
9	1	1	1	1	1	2	1
10	2	1	1	1	2	2	2
11	2	1	1	1	2	2	2
12	2	1	1	1	2	2	2
13	2	1	1	1	2	2	2
14	2	1	1	1	2	2	2
15	2	1	1	1	2	1	2
16	2	1	1	1	2	1	2
17	2	1	1	1	2	1	2
18	2	1	1	1	2	1	2
19	1	1	1	1	1	1	2
20	1	1	1	1	1	1	1
21	1	1	1	1	1	1	1
22	1	1	1	1	1	1	1
23	1	1	1	1	1	1	1

LANES REQUIRED TO BE OPEN BY HOUR AND TIME OF DAY

FALL SEASON SEPTEMBER 16 THRU November 30

HR/DAY	MON	TUES	WEDS	THUR	FRI	SAT	SUN
0	1	1	1	1	1	1	1
1	1	1	1	1	1	1	1
2	1	1	1	1	1	1	1
3	1	1	1	1	1	1	1
4	1	1	1	1	1	1	1
5	1	1	1	1	1	1	1
6	1	1	1	1	1	1	1
7	1	1	1	1	1	1	1
8	1	1	1	1	1	1	1
9	1	1	1	1	1	1	1
10	1	1	1	1	1	2	2
11	1	1	1	1	1	2	2
12	1	1	1	1	2	2	2
13	2	1	1	1	2	2	2
14	2	1	1	1	2	2	2
15	2	1	1	1	2	1	2
16	2	1	1	1	2	1	2
17	1	1	1	1	2	1	2
18	1	1	1	1	1	1	2
19	1	1	1	1	1	1	1
20	1	1	1	1	1	1	1
21	1	1	1	1	1	1	1
22	1	1	1	1	1	1	1
23	1	1	1	1	1	1	1

WINTER SEAS. DECEMBER 1 THRU February 28

HR/DAY	MON	TUES	WEDS	THUR	FRI	SAT	SUN
0	1	1	1	1	1	1	1
1	1	1	1	1	1	1	1
2	1	1	1	1	1	1	1
3	1	1	1	1	1	1	1
4	1	1	1	1	1	1	1
5	1	1	1	1	1	1	1
6	1	1	1	1	1	1	1
7	1	1	1	1	1	1	1
8	1	1	1	1	1	1	1
9	1	1	1	1	1	1	1
10	1	1	1	1	1	1	1
11	1	1	1	1	1	1	1
12	1	1	1	1	1	1	1
13	1	1	1	1	1	1	2
14	1	1	1	1	1	1	2
15	1	1	1	1	1	1	1
16	1	1	1	1	1	1	1
17	1	1	1	1	1	1	1
18	1	1	1	1	1	1	1
19	1	1	1	1	1	1	1
20	1	1	1	1	1	1	1
21	1	1	1	1	1	1	1
22	1	1	1	1	1	1	1
23	1	1	1	1	1	1	1

NOTES:

1) THE NEW YORK STATE THRUWAY IS A LIMITED ACCESS, HIGH-SPEED, HIGH-VOLUME HIGHWAY. TRAFFIC SHALL BE MAINTAINED IN ACCORDANCE WITH THE *MANUAL ON UNIFORM TRAFFIC CONTROL DEVICES (MUTCD)*, THE *WORK ZONE TRAFFIC CONTROL PLANS*, AND THE *STANDARD SPECIFICATIONS* SECTION 619 AS AMENDED BY THE AUTHORITY.

2) LANE CLOSURES ON THE THRUWAY SHALL ONLY BE ALLOWED IN ACCORDANCE WITH THESE TRAFFIC MANAGEMENT TABLE(S), UNLESS INDICATED OTHERWISE IN THE CONTRACT PLANS OR PROPOSAL DOCUMENTS.

3) LANE CLOSURE CHARTS SHALL APPLY AS FOLLOWS:

- 1,150 VEH/HR/LANE: APPLIES TO ALL WORK REQUIRING LANE CLOSURE(S) EXCEPT AS PERMITTED BELOW.

- 1,300 VEH/HR/LANE: APPLIES TO NON-EVASIVE WORK WHERE WORKERS AND/OR EQUIPMENT ARE LOCATED 4 FT. OR MORE FROM TRAVEL (SPACE) LANE, OR AS APPROVED BY THE THRUWAY PROJECT ENGINEER. WORK SHOULD BE ABLE TO BE IMMEDIATELY STOPPED AND LANE CLOSURE(S) REMOVED IN THE EVENT QUEUES, GREATER THAN 1 MILE, DEVELOP.

NEW YORK STATE OF OPPORTUNITY. Thruway Authority

U.S. CUSTOMARY STANDARD SHEET

LANE CLOSURE CHARTS
1,300 VEHICLES PER HOUR
ALBANY DIVISION
(SHEET 16 OF 18)

APPROVED SEPTEMBER 1, 2018

/S/ PATRICK THOMPSON, P.E.
DIRECTOR DESIGN SUPPORT SERVICES BUREAU

ISSUED UNDER DB 18-003

TA 619-35

BERKSHIRE: I-90 WESTBOUND INTERCHANGES B3 TO B2 (1,300 VEH/HR/LANE)

LANES REQUIRED TO BE OPEN BY HOUR AND TIME OF DAY

SPRING SEASON MARCH 1 THRU MAY 20

HR/DAY	MON	TUES	WEDS	THUR	FRI	SAT	SUN
0	1	1	1	1	1	1	1
1	1	1	1	1	1	1	1
2	1	1	1	1	1	1	1
3	1	1	1	1	1	1	1
4	1	1	1	1	1	1	1
5	1	1	1	1	1	1	1
6	1	1	1	1	1	1	1
7	1	1	1	1	1	1	1
8	1	1	1	1	1	1	1
9	1	1	1	1	1	1	1
10	1	1	1	1	1	1	1
11	1	1	1	1	1	1	1
12	1	1	1	1	1	1	1
13	1	1	1	1	1	1	1
14	1	1	1	1	1	1	1
15	1	1	1	1	1	1	1
16	1	1	1	1	1	1	2
17	1	1	1	1	1	1	1
18	1	1	1	1	1	1	1
19	1	1	1	1	1	1	1
20	1	1	1	1	1	1	1
21	1	1	1	1	1	1	1
22	1	1	1	1	1	1	1
23	1	1	1	1	1	1	1

SUMMER SEASON MAY 21 THRU SEPTEMBER 15

HR/DAY	MON	TUES	WEDS	THUR	FRI	SAT	SUN
0	1	1	1	1	1	1	1
1	1	1	1	1	1	1	1
2	1	1	1	1	1	1	1
3	1	1	1	1	1	1	1
4	1	1	1	1	1	1	1
5	1	1	1	1	1	1	1
6	1	1	1	1	1	1	1
7	1	1	1	1	1	1	1
8	1	1	1	1	1	1	1
9	1	1	1	1	1	2	1
10	1	1	1	1	2	2	2
11	2	1	1	1	2	2	2
12	2	1	1	1	2	2	2
13	2	1	1	1	2	2	2
14	2	1	1	1	2	2	2
15	1	1	1	1	2	2	2
16	1	1	1	1	2	1	2
17	1	1	1	1	2	1	2
18	1	1	1	1	2	1	2
19	1	1	1	1	2	1	1
20	1	1	1	1	1	1	1
21	1	1	1	1	1	1	1
22	1	1	1	1	1	1	1
23	1	1	1	1	1	1	1

LANES REQUIRED TO BE OPEN BY HOUR AND TIME OF DAY

FALL SEASON SEPTEMBER 16 THRU November 30

HR/DAY	MON	TUES	WEDS	THUR	FRI	SAT	SUN
0	1	1	1	1	1	1	1
1	1	1	1	1	1	1	1
2	1	1	1	1	1	1	1
3	1	1	1	1	1	1	1
4	1	1	1	1	1	1	1
5	1	1	1	1	1	1	1
6	1	1	1	1	1	1	1
7	1	1	1	1	1	1	1
8	1	1	1	1	1	1	1
9	1	1	1	1	1	1	1
10	1	1	1	1	1	1	1
11	1	1	1	1	1	1	2
12	1	1	1	1	2	1	2
13	1	1	1	1	2	1	2
14	1	1	1	1	2	1	2
15	1	1	1	1	2	1	2
16	1	1	1	1	2	1	2
17	1	1	1	1	2	1	2
18	1	1	1	1	1	1	2
19	1	1	1	1	1	1	1
20	1	1	1	1	1	1	1
21	1	1	1	1	1	1	1
22	1	1	1	1	1	1	1
23	1	1	1	1	1	1	1

WINTER SEAS. DECEMBER 1 THRU February 28

HR/DAY	MON	TUES	WEDS	THUR	FRI	SAT	SUN
0	1	1	1	1	1	1	1
1	1	1	1	1	1	1	1
2	1	1	1	1	1	1	1
3	1	1	1	1	1	1	1
4	1	1	1	1	1	1	1
5	1	1	1	1	1	1	1
6	1	1	1	1	1	1	1
7	1	1	1	1	1	1	1
8	1	1	1	1	1	1	1
9	1	1	1	1	1	1	1
10	1	1	1	1	1	1	1
11	1	1	1	1	1	1	1
12	1	1	1	1	1	1	1
13	1	1	1	1	1	1	1
14	1	1	1	1	1	1	1
15	1	1	1	1	1	1	1
16	1	1	1	1	1	1	1
17	1	1	1	1	1	1	1
18	1	1	1	1	1	1	1
19	1	1	1	1	1	1	1
20	1	1	1	1	1	1	1
21	1	1	1	1	1	1	1
22	1	1	1	1	1	1	1
23	1	1	1	1	1	1	1

BERKSHIRE: I-90 EASTBOUND INTERCHANGES B2 TO B3 (1,300 VEH/HR/LANE)

LANES REQUIRED TO BE OPEN BY HOUR AND TIME OF DAY

SPRING SEASON MARCH 1 THRU MAY 20

HR/DAY	MON	TUES	WEDS	THUR	FRI	SAT	SUN
0	1	1	1	1	1	1	1
1	1	1	1	1	1	1	1
2	1	1	1	1	1	1	1
3	1	1	1	1	1	1	1
4	1	1	1	1	1	1	1
5	1	1	1	1	1	1	1
6	1	1	1	1	1	1	1
7	1	1	1	1	1	1	1
8	1	1	1	1	1	1	1
9	1	1	1	1	1	1	1
10	1	1	1	1	1	1	1
11	1	1	1	1	1	1	1
12	1	1	1	1	1	1	1
13	1	1	1	1	1	1	1
14	1	1	1	1	1	1	1
15	1	1	1	1	1	1	2
16	1	1	1	1	1	1	2
17	1	1	1	1	1	1	2
18	1	1	1	1	1	1	1
19	1	1	1	1	1	1	1
20	1	1	1	1	1	1	1
21	1	1	1	1	1	1	1
22	1	1	1	1	1	1	1
23	1	1	1	1	1	1	1

SUMMER SEASON MAY 21 THRU SEPTEMBER 15

HR/DAY	MON	TUES	WEDS	THUR	FRI	SAT	SUN
0	1	1	1	1	1	1	1
1	1	1	1	1	1	1	1
2	1	1	1	1	1	1	1
3	1	1	1	1	1	1	1
4	1	1	1	1	1	1	1
5	1	1	1	1	1	1	1
6	1	1	1	1	1	1	1
7	1	1	1	1	1	1	1
8	1	1	1	1	1	1	1
9	1	1	1	1	1	1	1
10	1	1	1	1	1	2	2
11	2	1	1	1	2	2	2
12	2	1	1	1	2	2	2
13	2	1	1	1	2	2	2
14	2	1	1	1	2	1	2
15	2	1	1	1	2	1	2
16	2	1	1	1	2	1	2
17	1	1	1	1	2	1	2
18	1	1	1	1	1	1	2
19	1	1	1	1	1	1	2
20	1	1	1	1	1	1	1
21	1	1	1	1	1	1	1
22	1	1	1	1	1	1	1
23	1	1	1	1	1	1	1

LANES REQUIRED TO BE OPEN BY HOUR AND TIME OF DAY

FALL SEASON SEPTEMBER 16 THRU November 30

HR/DAY	MON	TUES	WEDS	THUR	FRI	SAT	SUN
0	1	1	1	1	1	1	1
1	1	1	1	1	1	1	1
2	1	1	1	1	1	1	1
3	1	1	1	1	1	1	1
4	1	1	1	1	1	1	1
5	1	1	1	1	1	1	1
6	1	1	1	1	1	1	1
7	1	1	1	1	1	1	1
8	1	1	1	1	1	1	1
9	1	1	1	1	1	1	1
10	1	1	1	1	1	1	1
11	1	1	1	1	1	1	1
12	1	1	1	1	1	1	2
13	1	1	1	1	1	1	2
14	1	1	1	1	1	1	2
15	1	1	1	1	1	1	2
16	1	1	1	1	1	1	2
17	1	1	1	1	1	1	1
18	1	1	1	1	1	1	1
19	1	1	1	1	1	1	1
20	1	1	1	1	1	1	1
21	1	1	1	1	1	1	1
22	1	1	1	1	1	1	1
23	1	1	1	1	1	1	1

WINTER SEAS. DECEMBER 1 THRU February 28

HR/DAY	MON	TUES	WEDS	THUR	FRI	SAT	SUN
0	1	1	1	1	1	1	1
1	1	1	1	1	1	1	1
2	1	1	1	1	1	1	1
3	1	1	1	1	1	1	1
4	1	1	1	1	1	1	1
5	1	1	1	1	1	1	1
6	1	1	1	1	1	1	1
7	1	1	1	1	1	1	1
8	1	1	1	1	1	1	1
9	1	1	1	1	1	1	1
10	1	1	1	1	1	1	1
11	1	1	1	1	1	1	1
12	1	1	1	1	1	1	1
13	1	1	1	1	1	1	1
14	1	1	1	1	1	1	1
15	1	1	1	1	1	1	1
16	1	1	1	1	1	1	1
17	1	1	1	1	1	1	1
18	1	1	1	1	1	1	1
19	1	1	1	1	1	1	1
20	1	1	1	1	1	1	1
21	1	1	1	1	1	1	1
22	1	1	1	1	1	1	1
23	1	1	1	1	1	1	1

NOTES:

1) THE NEW YORK STATE THRUWAY IS A LIMITED ACCESS, HIGH-SPEED, HIGH-VOLUME HIGHWAY. TRAFFIC SHALL BE MAINTAINED IN ACCORDANCE WITH THE *MANUAL ON UNIFORM TRAFFIC CONTROL DEVICES (MUTCD)*, THE *WORK ZONE TRAFFIC CONTROL PLANS*, AND THE *STANDARD SPECIFICATIONS* SECTION 619 AS AMENDED BY THE AUTHORITY.

2) LANE CLOSURES ON THE THRUWAY SHALL ONLY BE ALLOWED IN ACCORDANCE WITH THESE TRAFFIC MANAGEMENT TABLE(S), UNLESS INDICATED OTHERWISE IN THE CONTRACT PLANS OR PROPOSAL DOCUMENTS.

3) LANE CLOSURE CHARTS SHALL APPLY AS FOLLOWS:

- 1,150 VEH/HR/LANE: APPLIES TO ALL WORK REQUIRING LANE CLOSURE(S) EXCEPT AS PERMITTED BELOW.

- 1,300 VEH/HR/LANE: APPLIES TO NON-EVASIVE WORK WHERE WORKERS AND/OR EQUIPMENT ARE LOCATED 4 FT. OR MORE FROM TRAVEL (SPACE) LANE, OR AS APPROVED BY THE THRUWAY PROJECT ENGINEER. WORK SHOULD BE ABLE TO BE IMMEDIATELY STOPPED AND LANE CLOSURE(S) REMOVED IN THE EVENT QUEUES, GREATER THAN 1 MILE, DEVELOP.

NEW YORK STATE OF OPPORTUNITY. Thruway Authority

U.S. CUSTOMARY STANDARD SHEET

LANE CLOSURE CHARTS
1,300 VEHICLES PER HOUR
ALBANY DIVISION
(SHEET 17 OF 18)

APPROVED SEPTEMBER 1, 2018

/S/ PATRICK THOMPSON, P.E.
DIRECTOR DESIGN SUPPORT SERVICES BUREAU

ISSUED UNDER DB 18-003

TA 619-36

BERKSHIRE: I-90 WESTBOUND INTERCHANGES MASS LINE TO B3 (1,300 VEH/HR/LANE)

LANES REQUIRED TO BE OPEN BY HOUR AND TIME OF DAY

SPRING SEASON MARCH 1 THRU MAY 20

HR/DAY	MON	TUES	WEDS	THUR	FRI	SAT	SUN
0	1	1	1	1	1	1	1
1	1	1	1	1	1	1	1
2	1	1	1	1	1	1	1
3	1	1	1	1	1	1	1
4	1	1	1	1	1	1	1
5	1	1	1	1	1	1	1
6	1	1	1	1	1	1	1
7	1	1	1	1	1	1	1
8	1	1	1	1	1	1	1
9	1	1	1	1	1	1	1
10	1	1	1	1	1	1	1
11	1	1	1	1	1	1	1
12	1	1	1	1	1	1	1
13	1	1	1	1	1	1	1
14	1	1	1	1	1	1	1
15	1	1	1	1	1	1	1
16	1	1	1	1	2	1	1
17	1	1	1	1	1	1	1
18	1	1	1	1	1	1	1
19	1	1	1	1	1	1	1
20	1	1	1	1	1	1	1
21	1	1	1	1	1	1	1
22	1	1	1	1	1	1	1
23	1	1	1	1	1	1	1

SUMMER SEASON MAY 21 THRU SEPTEMBER 15

HR/DAY	MON	TUES	WEDS	THUR	FRI	SAT	SUN
0	1	1	1	1	1	1	1
1	1	1	1	1	1	1	1
2	1	1	1	1	1	1	1
3	1	1	1	1	1	1	1
4	1	1	1	1	1	1	1
5	1	1	1	1	1	1	1
6	1	1	1	1	1	1	1
7	1	1	1	1	1	1	1
8	1	1	1	1	1	1	1
9	1	1	1	1	1	1	1
10	1	1	1	1	2	2	1
11	1	1	1	1	2	2	2
12	1	1	1	1	2	2	2
13	1	1	1	1	2	2	2
14	1	1	1	1	2	1	2
15	1	1	1	1	2	1	2
16	1	1	1	1	2	1	2
17	1	1	1	1	2	1	2
18	1	1	1	1	2	1	2
19	1	1	1	1	2	1	1
20	1	1	1	1	1	1	1
21	1	1	1	1	1	1	1
22	1	1	1	1	1	1	1
23	1	1	1	1	1	1	1

LANES REQUIRED TO BE OPEN BY HOUR AND TIME OF DAY

FALL SEASON SEPTEMBER 16 THRU November 30

HR/DAY	MON	TUES	WEDS	THUR	FRI	SAT	SUN
0	1	1	1	1	1	1	1
1	1	1	1	1	1	1	1
2	1	1	1	1	1	1	1
3	1	1	1	1	1	1	1
4	1	1	1	1	1	1	1
5	1	1	1	1	1	1	1
6	1	1	1	1	1	1	1
7	1	1	1	1	1	1	1
8	1	1	1	1	1	1	1
9	1	1	1	1	1	1	1
10	1	1	1	1	1	1	1
11	1	1	1	1	1	1	1
12	1	1	1	1	1	1	1
13	1	1	1	1	1	1	1
14	1	1	1	1	2	1	1
15	1	1	1	1	2	1	2
16	1	1	1	1	2	1	2
17	1	1	1	1	2	1	1
18	1	1	1	1	1	1	1
19	1	1	1	1	1	1	1
20	1	1	1	1	1	1	1
21	1	1	1	1	1	1	1
22	1	1	1	1	1	1	1
23	1	1	1	1	1	1	1

WINTER SEAS. DECEMBER 1 THRU February 28

HR/DAY	MON	TUES	WEDS	THUR	FRI	SAT	SUN
0	1	1	1	1	1	1	1
1	1	1	1	1	1	1	1
2	1	1	1	1	1	1	1
3	1	1	1	1	1	1	1
4	1	1	1	1	1	1	1
5	1	1	1	1	1	1	1
6	1	1	1	1	1	1	1
7	1	1	1	1	1	1	1
8	1	1	1	1	1	1	1
9	1	1	1	1	1	1	1
10	1	1	1	1	1	1	1
11	1	1	1	1	1	1	1
12	1	1	1	1	1	1	1
13	1	1	1	1	1	1	1
14	1	1	1	1	1	1	1
15	1	1	1	1	1	1	1
16	1	1	1	1	1	1	1
17	1	1	1	1	1	1	1
18	1	1	1	1	1	1	1
19	1	1	1	1	1	1	1
20	1	1	1	1	1	1	1
21	1	1	1	1	1	1	1
22	1	1	1	1	1	1	1
23	1	1	1	1	1	1	1

BERKSHIRE: I-90 EASTBOUND INTERCHANGES B3 TO MASS LINE (1,300 VEH/HR/LANE)

LANES REQUIRED TO BE OPEN BY HOUR AND TIME OF DAY

SPRING SEASON MARCH 1 THRU MAY 20

HR/DAY	MON	TUES	WEDS	THUR	FRI	SAT	SUN
0	1	1	1	1	1	1	1
1	1	1	1	1	1	1	1
2	1	1	1	1	1	1	1
3	1	1	1	1	1	1	1
4	1	1	1	1	1	1	1
5	1	1	1	1	1	1	1
6	1	1	1	1	1	1	1
7	1	1	1	1	1	1	1
8	1	1	1	1	1	1	1
9	1	1	1	1	1	1	1
10	1	1	1	1	1	1	1
11	1	1	1	1	1	1	1
12	1	1	1	1	1	1	1
13	1	1	1	1	1	1	1
14	1	1	1	1	1	1	1
15	1	1	1	1	1	1	1
16	1	1	1	1	1	1	1
17	1	1	1	1	1	1	1
18	1	1	1	1	1	1	1
19	1	1	1	1	1	1	1
20	1	1	1	1	1	1	1
21	1	1	1	1	1	1	1
22	1	1	1	1	1	1	1
23	1	1	1	1	1	1	1

SUMMER SEASON MAY 21 THRU SEPTEMBER 15

HR/DAY	MON	TUES	WEDS	THUR	FRI	SAT	SUN
0	1	1	1	1	1	1	1
1	1	1	1	1	1	1	1
2	1	1	1	1	1	1	1
3	1	1	1	1	1	1	1
4	1	1	1	1	1	1	1
5	1	1	1	1	1	1	1
6	1	1	1	1	1	1	1
7	1	1	1	1	1	1	1
8	1	1	1	1	1	1	1
9	1	1	1	1	1	1	1
10	1	1	1	1	1	2	1
11	1	1	1	1	1	2	2
12	1	1	1	1	1	2	2
13	1	1	1	1	2	1	2
14	1	1	1	1	1	1	2
15	1	1	1	1	1	1	2
16	1	1	1	1	1	1	2
17	1	1	1	1	1	1	2
18	1	1	1	1	1	1	2
19	1	1	1	1	1	1	1
20	1	1	1	1	1	1	1
21	1	1	1	1	1	1	1
22	1	1	1	1	1	1	1
23	1	1	1	1	1	1	1

LANES REQUIRED TO BE OPEN BY HOUR AND TIME OF DAY

FALL SEASON SEPTEMBER 16 THRU November 30

HR/DAY	MON	TUES	WEDS	THUR	FRI	SAT	SUN
0	1	1	1	1	1	1	1
1	1	1	1	1	1	1	1
2	1	1	1	1	1	1	1
3	1	1	1	1	1	1	1
4	1	1	1	1	1	1	1
5	1	1	1	1	1	1	1
6	1	1	1	1	1	1	1
7	1	1	1	1	1	1	1
8	1	1	1	1	1	1	1
9	1	1	1	1	1	1	1
10	1	1	1	1	1	1	1
11	1	1	1	1	1	1	1
12	1	1	1	1	1	1	2
13	1	1	1	1	1	1	2
14	1	1	1	1	1	1	2
15	1	1	1	1	1	1	2
16	1	1	1	1	1	1	2
17	1	1	1	1	1	1	1
18	1	1	1	1	1	1	1
19	1	1	1	1	1	1	1
20	1	1	1	1	1	1	1
21	1	1	1	1	1	1	1
22	1	1	1	1	1	1	1
23	1	1	1	1	1	1	1

WINTER SEAS. DECEMBER 1 THRU February 28

HR/DAY	MON	TUES	WEDS	THUR	FRI	SAT	SUN
0	1	1	1	1	1	1	1
1	1	1	1	1	1	1	1
2	1	1	1	1	1	1	1
3	1	1	1	1	1	1	1
4	1	1	1	1	1	1	1
5	1	1	1	1	1	1	1
6	1	1	1	1	1	1	1
7	1	1	1	1	1	1	1
8	1	1	1	1	1	1	1
9	1	1	1	1	1	1	1
10	1	1	1	1	1	1	1
11	1	1	1	1	1	1	1
12	1	1	1	1	1	1	1
13	1	1	1	1	1	1	1
14	1	1	1	1	1	1	1
15	1	1	1	1	1	1	1
16	1	1	1	1	1	1	1
17	1	1	1	1	1	1	1
18	1	1	1	1	1	1	1
19	1	1	1	1	1	1	1
20	1	1	1	1	1	1	1
21	1	1	1	1	1	1	1
22	1	1	1	1	1	1	1
23	1	1	1	1	1	1	1

NOTES:

1) THE NEW YORK STATE THRUWAY IS A LIMITED ACCESS, HIGH-SPEED, HIGH-VOLUME HIGHWAY. TRAFFIC SHALL BE MAINTAINED IN ACCORDANCE WITH THE *MANUAL ON UNIFORM TRAFFIC CONTROL DEVICES (MUTCD)*, THE *WORK ZONE TRAFFIC CONTROL PLANS*, AND THE *STANDARD SPECIFICATIONS* SECTION 619 AS AMENDED BY THE AUTHORITY.

2) LANE CLOSURES ON THE THRUWAY SHALL ONLY BE ALLOWED IN ACCORDANCE WITH THESE TRAFFIC MANAGEMENT TABLE(S), UNLESS INDICATED OTHERWISE IN THE CONTRACT PLANS OR PROPOSAL DOCUMENTS.

3) LANE CLOSURE CHARTS SHALL APPLY AS FOLLOWS:

- 1,150 VEH/HR/LANE: APPLIES TO ALL WORK REQUIRING LANE CLOSURE(S) EXCEPT AS PERMITTED BELOW.

- 1,300 VEH/HR/LANE: APPLIES TO NON-EVASIVE WORK WHERE WORKERS AND/OR EQUIPMENT ARE LOCATED 4 FT. OR MORE FROM TRAVEL (SPACE) LANE, OR AS APPROVED BY THE THRUWAY PROJECT ENGINEER. WORK SHOULD BE ABLE TO BE IMMEDIATELY STOPPED AND LANE CLOSURE(S) REMOVED IN THE EVENT QUEUES, GREATER THAN 1 MILE, DEVELOP.

NEW YORK STATE OF OPPORTUNITY. Thruway Authority

U.S. CUSTOMARY STANDARD SHEET

LANE CLOSURE CHARTS
1,300 VEHICLES PER HOUR
ALBANY DIVISION
(SHEET 18 OF 18)

APPROVED SEPTEMBER 1, 2018

/S/ PATRICK THOMPSON, P.E.
DIRECTOR DESIGN SUPPORT SERVICES BUREAU

ISSUED UNDER DB 18-003

TA 619-35

I-90 WESTBOUND INTERCHANGES 29 TO 29A (1,300 VEH/HR/LANE)

LANES REQUIRED TO BE OPEN BY HOUR AND TIME OF DAY

SPRING SEASON MARCH 1 THRU MAY 20

HR/DAY	MON	TUES	WEDS	THUR	FRI	SAT	SUN
0	1	1	1	1	1	1	1
1	1	1	1	1	1	1	1
2	1	1	1	1	1	1	1
3	1	1	1	1	1	1	1
4	1	1	1	1	1	1	1
5	1	1	1	1	1	1	1
6	1	1	1	1	1	1	1
7	1	1	1	1	1	1	1
8	1	1	1	1	1	1	1
9	1	1	1	1	1	1	1
10	1	1	1	1	1	1	1
11	1	1	1	1	1	1	1
12	1	1	1	1	1	1	1
13	1	1	1	1	1	1	1
14	1	1	1	1	2	1	1
15	1	1	1	1	2	1	1
16	1	1	1	1	2	1	1
17	1	1	1	1	2	1	1
18	1	1	1	1	1	1	1
19	1	1	1	1	1	1	1
20	1	1	1	1	1	1	1
21	1	1	1	1	1	1	1
22	1	1	1	1	1	1	1
23	1	1	1	1	1	1	1

SUMMER SEASON MAY 21 THRU SEPTEMBER 15

HR/DAY	MON	TUES	WEDS	THUR	FRI	SAT	SUN
0	1	1	1	1	1	1	1
1	1	1	1	1	1	1	1
2	1	1	1	1	1	1	1
3	1	1	1	1	1	1	1
4	1	1	1	1	1	1	1
5	1	1	1	1	1	1	1
6	1	1	1	1	1	1	1
7	1	1	1	1	1	1	1
8	1	1	1	1	1	1	1
9	1	1	1	1	1	1	1
10	1	1	1	1	1	2	1
11	1	1	1	1	2	2	2
12	1	1	1	1	2	2	2
13	1	1	1	1	2	1	2
14	1	1	1	1	2	1	2
15	1	1	1	1	2	1	2
16	1	1	1	1	2	1	2
17	1	1	1	1	2	1	1
18	1	1	1	1	2	1	1
19	1	1	1	1	1	1	1
20	1	1	1	1	1	1	1
21	1	1	1	1	1	1	1
22	1	1	1	1	1	1	1
23	1	1	1	1	1	1	1

LANES REQUIRED TO BE OPEN BY HOUR AND TIME OF DAY

FALL SEASON SEPTEMBER 16 THRU November 30

HR/DAY	MON	TUES	WEDS	THUR	FRI	SAT	SUN
0	1	1	1	1	1	1	1
1	1	1	1	1	1	1	1
2	1	1	1	1	1	1	1
3	1	1	1	1	1	1	1
4	1	1	1	1	1	1	1
5	1	1	1	1	1	1	1
6	1	1	1	1	1	1	1
7	1	1	1	1	1	1	1
8	1	1	1	1	1	1	1
9	1	1	1	1	1	1	1
10	1	1	1	1	1	1	1
11	1	1	1	1	1	1	2
12	1	1	1	1	1	1	2
13	1	1	1	1	1	1	2
14	1	1	1	1	1	1	2
15	1	1	2	1	2	1	2
16	1	1	2	1	2	1	2
17	1	1	1	1	2	1	2
18	1	1	1	1	1	1	1
19	1	1	1	1	1	1	1
20	1	1	1	1	1	1	1
21	1	1	1	1	1	1	1
22	1	1	1	1	1	1	1
23	1	1	1	1	1	1	1

WINTER SEAS. DECEMBER 1 THRU February 28

HR/DAY	MON	TUES	WEDS	THUR	FRI	SAT	SUN
0	1	1	1	1	1	1	1
1	1	1	1	1	1	1	1
2	1	1	1	1	1	1	1
3	1	1	1	1	1	1	1
4	1	1	1	1	1	1	1
5	1	1	1	1	1	1	1
6	1	1	1	1	1	1	1
7	1	1	1	1	1	1	1
8	1	1	1	1	1	1	1
9	1	1	1	1	1	1	1
10	1	1	1	1	1	1	1
11	1	1	1	1	1	1	1
12	1	1	1	1	1	1	1
13	1	1	1	1	1	1	1
14	1	1	1	1	1	1	1
15	1	1	1	1	1	1	1
16	1	1	1	1	1	1	1
17	1	1	1	1	1	1	1
18	1	1	1	1	1	1	1
19	1	1	1	1	1	1	1
20	1	1	1	1	1	1	1
21	1	1	1	1	1	1	1
22	1	1	1	1	1	1	1
23	1	1	1	1	1	1	1

I-90 EASTBOUND INTERCHANGES 29A TO 29 (1,300 VEH/HR/LANE)

LANES REQUIRED TO BE OPEN BY HOUR AND TIME OF DAY

SPRING SEASON MARCH 1 THRU MAY 20

HR/DAY	MON	TUES	WEDS	THUR	FRI	SAT	SUN
0	1	1	1	1	1	1	1
1	1	1	1	1	1	1	1
2	1	1	1	1	1	1	1
3	1	1	1	1	1	1	1
4	1	1	1	1	1	1	1
5	1	1	1	1	1	1	1
6	1	1	1	1	1	1	1
7	1	1	1	1	1	1	1
8	1	1	1	1	1	1	1
9	1	1	1	1	1	1	1
10	1	1	1	1	1	1	1
11	1	1	1	1	1	1	1
12	1	1	1	1	1	1	1
13	1	1	1	1	1	1	1
14	1	1	1	1	1	1	2
15	1	1	1	1	1	1	2
16	1	1	1	1	1	1	2
17	1	1	1	1	1	1	2
18	1	1	1	1	1	1	2
19	1	1	1	1	1	1	1
20	1	1	1	1	1	1	1
21	1	1	1	1	1	1	1
22	1	1	1	1	1	1	1
23	1	1	1	1	1	1	1

SUMMER SEASON MAY 21 THRU SEPTEMBER 15

HR/DAY	MON	TUES	WEDS	THUR	FRI	SAT	SUN
0	1	1	1	1	1	1	1
1	1	1	1	1	1	1	1
2	1	1	1	1	1	1	1
3	1	1	1	1	1	1	1
4	1	1	1	1	1	1	1
5	1	1	1	1	1	1	1
6	1	1	1	1	1	1	1
7	1	1	1	1	1	1	1
8	1	1	1	1	1	1	1
9	1	1	1	1	1	1	1
10	1	1	1	1	2	2	2
11	2	1	1	1	2	2	2
12	2	1	1	1	2	1	2
13	2	1	1	1	2	1	2
14	2	1	1	1	2	1	2
15	1	1	1	1	2	1	2
16	1	1	1	1	2	1	2
17	1	1	1	1	2	1	2
18	1	1	1	1	1	1	2
19	1	1	1	1	1	1	1
20	1	1	1	1	1	1	1
21	1	1	1	1	1	1	1
22	1	1	1	1	1	1	1
23	1	1	1	1	1	1	1

LANES REQUIRED TO BE OPEN BY HOUR AND TIME OF DAY

FALL SEASON SEPTEMBER 16 THRU November 30

HR/DAY	MON	TUES	WEDS	THUR	FRI	SAT	SUN
0	1	1	1	1	1	1	1
1	1	1	1	1	1	1	1
2	1	1	1	1	1	1	1
3	1	1	1	1	1	1	1
4	1	1	1	1	1	1	1
5	1	1	1	1	1	1	1
6	1	1	1	1	1	1	1
7	1	1	1	1	1	1	1
8	1	1	1	1	1	1	1
9	1	1	1	1	1	1	1
10	1	1	1	1	1	1	1
11	1	1	1	1	1	1	2
12	1	1	1	1	1	1	2
13	1	1	1	1	1	1	2
14	1	1	1	1	2	1	2
15	1	1	1	1	2	1	2
16	1	1	1	1	2	1	2
17	1	1	1	1	1	1	2
18	1	1	1	1	1	1	1
19	1	1	1	1	1	1	1
20	1	1	1	1	1	1	1
21	1	1	1	1	1	1	1
22	1	1	1	1	1	1	1
23	1	1	1	1	1	1	1

WINTER SEAS. DECEMBER 1 THRU February 28

HR/DAY	MON	TUES	WEDS	THUR	FRI	SAT	SUN
0	1	1	1	1	1	1	1
1	1	1	1	1	1	1	1
2	1	1	1	1	1	1	1
3	1	1	1	1	1	1	1
4	1	1	1	1	1	1	1
5	1	1	1	1	1	1	1
6	1	1	1	1	1	1	1
7	1	1	1	1	1	1	1
8	1	1	1	1	1	1	1
9	1	1	1	1	1	1	1
10	1	1	1	1	1	1	1
11	1	1	1	1	1	1	1
12	1	1	1	1	1	1	1
13	1	1	1	1	1	1	1
14	1	1	1	1	1	1	1
15	1	1	1	1	1	1	1
16	1	1	1	1	1	1	1
17	1	1	1	1	1	1	1
18	1	1	1	1	1	1	1
19	1	1	1	1	1	1	1
20	1	1	1	1	1	1	1
21	1	1	1	1	1	1	1
22	1	1	1	1	1	1	1
23	1	1	1	1	1	1	1

NOTES:

1) THE NEW YORK STATE THRUWAY IS A LIMITED ACCESS, HIGH-SPEED, HIGH-VOLUME HIGHWAY. TRAFFIC SHALL BE MAINTAINED IN ACCORDANCE WITH THE *MANUAL ON UNIFORM TRAFFIC CONTROL DEVICES (MUTCD)*, THE *WORK ZONE TRAFFIC CONTROL PLANS*, AND THE *STANDARD SPECIFICATIONS* SECTION 619 AS AMENDED BY THE AUTHORITY.

2) LANE CLOSURES ON THE THRUWAY SHALL ONLY BE ALLOWED IN ACCORDANCE WITH THESE TRAFFIC MANAGEMENT TABLE(S), UNLESS INDICATED OTHERWISE IN THE CONTRACT PLANS OR PROPOSAL DOCUMENTS.

3) LANE CLOSURE CHARTS SHALL APPLY AS FOLLOWS:

- 1,150 VEH/HR/LANE: APPLIES TO ALL WORK REQUIRING LANE CLOSURE(S) EXCEPT AS PERMITTED BELOW.

- 1,300 VEH/HR/LANE: APPLIES TO NON-EVASIVE WORK WHERE WORKERS AND/OR EQUIPMENT ARE LOCATED 4 FT. OR MORE FROM TRAVEL (SPACE) LANE, OR AS APPROVED BY THE THRUWAY PROJECT ENGINEER. WORK SHOULD BE ABLE TO BE IMMEDIATELY STOPPED AND LANE CLOSURE(S) REMOVED IN THE EVENT QUEUES, GREATER THAN 1 MILE, DEVELOP.

NEW YORK STATE OF OPPORTUNITY. Thruway Authority

U.S. CUSTOMARY STANDARD SHEET

LANE CLOSURE CHARTS
1,300 VEHICLES PER HOUR
SYRACUSE DIVISION
(SHEET 1 OF 18)

APPROVED SEPTEMBER 1, 2018

/S/ PATRICK THOMPSON, P.E.
DIRECTOR DESIGN SUPPORT
SERVICES BUREAU

ISSUED UNDER DB 18-003

TA 619-36

I-90 WESTBOUND INTERCHANGES 29A TO 30 (1,300 VEH/HR/LANE)

LANES REQUIRED TO BE OPEN BY HOUR AND TIME OF DAY

SPRING SEASON MARCH 1 THRU MAY 20

HR/DAY	MON	TUES	WEDS	THUR	FRI	SAT	SUN
0	1	1	1	1	1	1	1
1	1	1	1	1	1	1	1
2	1	1	1	1	1	1	1
3	1	1	1	1	1	1	1
4	1	1	1	1	1	1	1
5	1	1	1	1	1	1	1
6	1	1	1	1	1	1	1
7	1	1	1	1	1	1	1
8	1	1	1	1	1	1	1
9	1	1	1	1	1	1	1
10	1	1	1	1	1	1	1
11	1	1	1	1	1	1	1
12	1	1	1	1	1	1	1
13	1	1	1	1	1	1	1
14	1	1	1	1	2	1	1
15	1	1	1	1	2	1	1
16	1	1	1	1	2	1	1
17	1	1	1	1	2	1	1
18	1	1	1	1	1	1	1
19	1	1	1	1	1	1	1
20	1	1	1	1	1	1	1
21	1	1	1	1	1	1	1
22	1	1	1	1	1	1	1
23	1	1	1	1	1	1	1

SUMMER SEASON MAY 21 THRU SEPTEMBER 15

HR/DAY	MON	TUES	WEDS	THUR	FRI	SAT	SUN
0	1	1	1	1	1	1	1
1	1	1	1	1	1	1	1
2	1	1	1	1	1	1	1
3	1	1	1	1	1	1	1
4	1	1	1	1	1	1	1
5	1	1	1	1	1	1	1
6	1	1	1	1	1	1	1
7	1	1	1	1	1	1	1
8	1	1	1	1	1	1	1
9	1	1	1	1	1	1	1
10	1	1	1	1	1	2	1
11	1	1	1	1	2	2	2
12	1	1	1	1	2	2	2
13	1	1	1	1	2	2	2
14	1	1	1	1	2	2	2
15	1	1	1	2	2	1	2
16	1	1	1	2	2	1	2
17	1	1	1	1	2	1	2
18	1	1	1	1	2	1	1
19	1	1	1	1	1	1	1
20	1	1	1	1	1	1	1
21	1	1	1	1	1	1	1
22	1	1	1	1	1	1	1
23	1	1	1	1	1	1	1

LANES REQUIRED TO BE OPEN BY HOUR AND TIME OF DAY

FALL SEASON SEPTEMBER 16 THRU November 30

HR/DAY	MON	TUES	WEDS	THUR	FRI	SAT	SUN
0	1	1	1	1	1	1	1
1	1	1	1	1	1	1	1
2	1	1	1	1	1	1	1
3	1	1	1	1	1	1	1
4	1	1	1	1	1	1	1
5	1	1	1	1	1	1	1
6	1	1	1	1	1	1	1
7	1	1	1	1	1	1	1
8	1	1	1	1	1	1	1
9	1	1	1	1	1	1	1
10	1	1	1	1	1	1	1
11	1	1	1	1	1	1	1
12	1	1	1	1	1	1	2
13	1	1	1	1	2	1	2
14	1	1	1	1	2	1	2
15	1	1	1	1	2	1	2
16	1	1	1	1	2	1	2
17	1	1	1	1	2	1	2
18	1	1	1	1	2	1	1
19	1	1	1	1	1	1	1
20	1	1	1	1	1	1	1
21	1	1	1	1	1	1	1
22	1	1	1	1	1	1	1
23	1	1	1	1	1	1	1

WINTER SEAS. DECEMBER 1 THRU February 28

HR/DAY	MON	TUES	WEDS	THUR	FRI	SAT	SUN
0	1	1	1	1	1	1	1
1	1	1	1	1	1	1	1
2	1	1	1	1	1	1	1
3	1	1	1	1	1	1	1
4	1	1	1	1	1	1	1
5	1	1	1	1	1	1	1
6	1	1	1	1	1	1	1
7	1	1	1	1	1	1	1
8	1	1	1	1	1	1	1
9	1	1	1	1	1	1	1
10	1	1	1	1	1	1	1
11	1	1	1	1	1	1	1
12	1	1	1	1	1	1	1
13	1	1	1	1	1	1	1
14	1	1	1	1	1	1	1
15	1	1	1	1	1	1	1
16	1	1	1	1	1	1	1
17	1	1	1	1	1	1	1
18	1	1	1	1	1	1	1
19	1	1	1	1	1	1	1
20	1	1	1	1	1	1	1
21	1	1	1	1	1	1	1
22	1	1	1	1	1	1	1
23	1	1	1	1	1	1	1

I-90 EASTBOUND INTERCHANGES 29A TO 30 (1,300 VEH/HR/LANE)

LANES REQUIRED TO BE OPEN BY HOUR AND TIME OF DAY

SPRING SEASON MARCH 1 THRU MAY 20

HR/DAY	MON	TUES	WEDS	THUR	FRI	SAT	SUN
0	1	1	1	1	1	1	1
1	1	1	1	1	1	1	1
2	1	1	1	1	1	1	1
3	1	1	1	1	1	1	1
4	1	1	1	1	1	1	1
5	1	1	1	1	1	1	1
6	1	1	1	1	1	1	1
7	1	1	1	1	1	1	1
8	1	1	1	1	1	1	1
9	1	1	1	1	1	1	1
10	1	1	1	1	1	1	1
11	1	1	1	1	1	1	1
12	1	1	1	1	1	1	1
13	1	1	1	1	1	1	1
14	1	1	1	1	1	1	2
15	1	1	1	1	1	1	2
16	1	1	1	1	1	1	2
17	1	1	1	1	1	1	2
18	1	1	1	1	1	1	1
19	1	1	1	1	1	1	1
20	1	1	1	1	1	1	1
21	1	1	1	1	1	1	1
22	1	1	1	1	1	1	1
23	1	1	1	1	1	1	1

SUMMER SEASON MAY 21 THRU SEPTEMBER 15

HR/DAY	MON	TUES	WEDS	THUR	FRI	SAT	SUN
0	1	1	1	1	1	1	1
1	1	1	1	1	1	1	1
2	1	1	1	1	1	1	1
3	1	1	1	1	1	1	1
4	1	1	1	1	1	1	1
5	1	1	1	1	1	1	1
6	1	1	1	1	1	1	1
7	1	1	1	1	1	1	1
8	1	1	1	1	1	1	1
9	1	1	1	1	1	1	1
10	1	1	1	1	2	2	2
11	2	1	1	1	2	2	2
12	2	1	1	1	2	1	2
13	2	1	1	1	2	1	2
14	1	1	1	1	2	1	2
15	1	1	1	1	2	1	2
16	1	1	1	1	2	1	2
17	1	1	1	1	2	1	2
18	1	1	1	1	1	1	2
19	1	1	1	1	1	1	1
20	1	1	1	1	1	1	1
21	1	1	1	1	1	1	1
22	1	1	1	1	1	1	1
23	1	1	1	1	1	1	1

LANES REQUIRED TO BE OPEN BY HOUR AND TIME OF DAY

FALL SEASON SEPTEMBER 16 THRU November 30

HR/DAY	MON	TUES	WEDS	THUR	FRI	SAT	SUN
0	1	1	1	1	1	1	1
1	1	1	1	1	1	1	1
2	1	1	1	1	1	1	1
3	1	1	1	1	1	1	1
4	1	1	1	1	1	1	1
5	1	1	1	1	1	1	1
6	1	1	1	1	1	1	1
7	1	1	1	1	1	1	1
8	1	1	1	1	1	1	1
9	1	1	1	1	1	1	1
10	1	1	1	1	1	1	1
11	1	1	1	1	1	1	2
12	1	1	1	1	1	1	2
13	1	1	1	1	1	1	2
14	1	1	1	1	2	1	2
15	1	1	1	1	2	1	2
16	1	1	1	1	2	1	2
17	1	1	1	1	1	1	2
18	1	1	1	1	1	1	1
19	1	1	1	1	1	1	1
20	1	1	1	1	1	1	1
21	1	1	1	1	1	1	1
22	1	1	1	1	1	1	1
23	1	1	1	1	1	1	1

WINTER SEAS. DECEMBER 1 THRU February 28

HR/DAY	MON	TUES	WEDS	THUR	FRI	SAT	SUN
0	1	1	1	1	1	1	1
1	1	1	1	1	1	1	1
2	1	1	1	1	1	1	1
3	1	1	1	1	1	1	1
4	1	1	1	1	1	1	1
5	1	1	1	1	1	1	1
6	1	1	1	1	1	1	1
7	1	1	1	1	1	1	1
8	1	1	1	1	1	1	1
9	1	1	1	1	1	1	1
10	1	1	1	1	1	1	1
11	1	1	1	1	1	1	1
12	1	1	1	1	1	1	1
13	1	1	1	1	1	1	1
14	1	1	1	1	1	1	1
15	1	1	1	1	1	1	1
16	1	1	1	1	1	1	1
17	1	1	1	1	1	1	1
18	1	1	1	1	1	1	1
19	1	1	1	1	1	1	1
20	1	1	1	1	1	1	1
21	1	1	1	1	1	1	1
22	1	1	1	1	1	1	1
23	1	1	1	1	1	1	1

NOTES:

1) THE NEW YORK STATE THRUWAY IS A LIMITED ACCESS, HIGH-SPEED, HIGH-VOLUME HIGHWAY. TRAFFIC SHALL BE MAINTAINED IN ACCORDANCE WITH THE *MANUAL ON UNIFORM TRAFFIC CONTROL DEVICES (MUTCD)*, THE *WORK ZONE TRAFFIC CONTROL PLANS*, AND THE *STANDARD SPECIFICATIONS* SECTION 619 AS AMENDED BY THE AUTHORITY.

2) LANE CLOSURES ON THE THRUWAY SHALL ONLY BE ALLOWED IN ACCORDANCE WITH THESE TRAFFIC MANAGEMENT TABLE(S), UNLESS INDICATED OTHERWISE IN THE CONTRACT PLANS OR PROPOSAL DOCUMENTS.

3) LANE CLOSURE CHARTS SHALL APPLY AS FOLLOWS:

- 1,150 VEH/HR/LANE: APPLIES TO ALL WORK REQUIRING LANE CLOSURE(S) EXCEPT AS PERMITTED BELOW.

- 1,300 VEH/HR/LANE: APPLIES TO NON-EVASIVE WORK WHERE WORKERS AND/OR EQUIPMENT ARE LOCATED 4 FT. OR MORE FROM TRAVEL (SPACE) LANE, OR AS APPROVED BY THE THRUWAY PROJECT ENGINEER. WORK SHOULD BE ABLE TO BE IMMEDIATELY STOPPED AND LANE CLOSURE(S) REMOVED IN THE EVENT QUEUES, GREATER THAN 1 MILE, DEVELOP.

NEW YORK STATE OF OPPORTUNITY. Thruway Authority

U.S. CUSTOMARY STANDARD SHEET

LANE CLOSURE CHARTS
1,300 VEHICLES PER HOUR
SYRACUSE DIVISION
(SHEET 2 OF 18)

APPROVED SEPTEMBER 1, 2018

/S/ PATRICK THOMPSON, P.E.
DIRECTOR DESIGN SUPPORT
SERVICES BUREAU

ISSUED UNDER DB 18-003

TA 619-36

I-90 WESTBOUND INTERCHANGES 30 TO 31 (1,300 VEH/HR/LANE)

LANES REQUIRED TO BE OPEN BY HOUR AND TIME OF DAY

SPRING SEASON MARCH 1 THRU MAY 20

HR/DAY	MON	TUES	WEDS	THUR	FRI	SAT	SUN
0	1	1	1	1	1	1	1
1	1	1	1	1	1	1	1
2	1	1	1	1	1	1	1
3	1	1	1	1	1	1	1
4	1	1	1	1	1	1	1
5	1	1	1	1	1	1	1
6	1	1	1	1	1	1	1
7	1	1	1	1	1	1	1
8	1	1	1	1	1	1	1
9	1	1	1	1	1	1	1
10	1	1	1	1	1	1	1
11	1	1	1	1	1	1	1
12	1	1	1	1	1	1	1
13	1	1	1	1	1	1	1
14	1	1	1	1	2	1	1
15	1	1	1	1	2	1	1
16	1	1	1	1	2	1	1
17	1	1	1	1	2	1	1
18	1	1	1	1	1	1	1
19	1	1	1	1	1	1	1
20	1	1	1	1	1	1	1
21	1	1	1	1	1	1	1
22	1	1	1	1	1	1	1
23	1	1	1	1	1	1	1

SUMMER SEASON MAY 21 THRU SEPTEMBER 15

HR/DAY	MON	TUES	WEDS	THUR	FRI	SAT	SUN
0	1	1	1	1	1	1	1
1	1	1	1	1	1	1	1
2	1	1	1	1	1	1	1
3	1	1	1	1	1	1	1
4	1	1	1	1	1	1	1
5	1	1	1	1	1	1	1
6	1	1	1	1	1	1	1
7	1	1	1	1	1	1	1
8	1	1	1	1	1	1	1
9	1	1	1	1	1	1	1
10	1	1	1	1	2	2	1
11	1	1	1	1	2	2	2
12	1	1	1	1	2	2	2
13	1	1	1	1	2	2	2
14	2	1	1	1	2	2	2
15	1	1	1	2	2	1	2
16	1	1	1	2	2	1	2
17	1	1	1	1	2	1	2
18	1	1	1	1	2	1	1
19	1	1	1	1	1	1	1
20	1	1	1	1	1	1	1
21	1	1	1	1	1	1	1
22	1	1	1	1	1	1	1
23	1	1	1	1	1	1	1

LANES REQUIRED TO BE OPEN BY HOUR AND TIME OF DAY

FALL SEASON SEPTEMBER 16 THRU November 30

HR/DAY	MON	TUES	WEDS	THUR	FRI	SAT	SUN
0	1	1	1	1	1	1	1
1	1	1	1	1	1	1	1
2	1	1	1	1	1	1	1
3	1	1	1	1	1	1	1
4	1	1	1	1	1	1	1
5	1	1	1	1	1	1	1
6	1	1	1	1	1	1	1
7	1	1	1	1	1	1	1
8	1	1	1	1	1	1	1
9	1	1	1	1	1	1	1
10	1	1	1	1	1	1	1
11	1	1	1	1	1	1	2
12	1	1	1	1	1	1	2
13	1	1	1	1	2	1	2
14	1	1	1	1	2	1	2
15	1	1	1	1	2	1	2
16	1	1	1	1	2	1	2
17	1	1	1	1	2	1	2
18	1	1	1	1	2	1	1
19	1	1	1	1	1	1	1
20	1	1	1	1	1	1	1
21	1	1	1	1	1	1	1
22	1	1	1	1	1	1	1
23	1	1	1	1	1	1	1

WINTER SEAS. DECEMBER 1 THRU February 28

HR/DAY	MON	TUES	WEDS	THUR	FRI	SAT	SUN
0	1	1	1	1	1	1	1
1	1	1	1	1	1	1	1
2	1	1	1	1	1	1	1
3	1	1	1	1	1	1	1
4	1	1	1	1	1	1	1
5	1	1	1	1	1	1	1
6	1	1	1	1	1	1	1
7	1	1	1	1	1	1	1
8	1	1	1	1	1	1	1
9	1	1	1	1	1	1	1
10	1	1	1	1	1	1	1
11	1	1	1	1	1	1	1
12	1	1	1	1	1	1	1
13	1	1	1	1	1	1	1
14	1	1	1	1	1	1	1
15	1	1	1	1	1	1	1
16	1	1	1	1	1	1	1
17	1	1	1	1	1	1	1
18	1	1	1	1	1	1	1
19	1	1	1	1	1	1	1
20	1	1	1	1	1	1	1
21	1	1	1	1	1	1	1
22	1	1	1	1	1	1	1
23	1	1	1	1	1	1	1

I-90 EASTBOUND INTERCHANGES 31 TO 30 (1,300 VEH/HR/LANE)

LANES REQUIRED TO BE OPEN BY HOUR AND TIME OF DAY

SPRING SEASON MARCH 1 THRU MAY 20

HR/DAY	MON	TUES	WEDS	THUR	FRI	SAT	SUN
0	1	1	1	1	1	1	1
1	1	1	1	1	1	1	1
2	1	1	1	1	1	1	1
3	1	1	1	1	1	1	1
4	1	1	1	1	1	1	1
5	1	1	1	1	1	1	1
6	1	1	1	1	1	1	1
7	1	1	1	1	1	1	1
8	1	1	1	1	1	1	1
9	1	1	1	1	1	1	1
10	1	1	1	1	1	1	1
11	1	1	1	1	1	1	1
12	1	1	1	1	1	1	1
13	1	1	1	1	1	1	1
14	1	1	1	1	1	1	2
15	1	1	1	1	2	1	2
16	1	1	1	1	2	1	2
17	1	1	1	1	1	1	2
18	1	1	1	1	1	1	1
19	1	1	1	1	1	1	1
20	1	1	1	1	1	1	1
21	1	1	1	1	1	1	1
22	1	1	1	1	1	1	1
23	1	1	1	1	1	1	1

SUMMER SEASON MAY 21 THRU SEPTEMBER 15

HR/DAY	MON	TUES	WEDS	THUR	FRI	SAT	SUN
0	1	1	1	1	1	1	1
1	1	1	1	1	1	1	1
2	1	1	1	1	1	1	1
3	1	1	1	1	1	1	1
4	1	1	1	1	1	1	1
5	1	1	1	1	1	1	1
6	1	1	1	1	1	1	1
7	1	1	1	1	1	1	1
8	1	1	1	1	1	1	1
9	1	1	1	1	1	1	1
10	1	1	1	1	1	2	2
11	1	1	1	1	2	2	2
12	1	1	1	1	2	2	2
13	1	1	1	1	2	1	2
14	1	1	1	1	2	1	2
15	1	1	1	1	2	1	2
16	1	1	1	1	2	1	2
17	1	1	1	1	2	1	2
18	1	1	1	1	1	1	2
19	1	1	1	1	1	1	2
20	1	1	1	1	1	1	1
21	1	1	1	1	1	1	1
22	1	1	1	1	1	1	1
23	1	1	1	1	1	1	1

LANES REQUIRED TO BE OPEN BY HOUR AND TIME OF DAY

FALL SEASON SEPTEMBER 16 THRU November 30

HR/DAY	MON	TUES	WEDS	THUR	FRI	SAT	SUN
0	1	1	1	1	1	1	1
1	1	1	1	1	1	1	1
2	1	1	1	1	1	1	1
3	1	1	1	1	1	1	1
4	1	1	1	1	1	1	1
5	1	1	1	1	1	1	1
6	1	1	1	1	1	1	1
7	1	1	1	1	1	1	1
8	1	1	1	1	1	1	1
9	1	1	1	1	1	1	1
10	1	1	1	1	1	1	1
11	1	1	1	1	1	1	2
12	1	1	1	1	1	1	2
13	1	1	1	1	1	1	2
14	1	1	1	1	2	1	2
15	1	1	1	1	2	1	2
16	1	1	1	1	2	1	2
17	1	1	1	1	2	1	2
18	1	1	1	1	1	1	2
19	1	1	1	1	1	1	1
20	1	1	1	1	1	1	1
21	1	1	1	1	1	1	1
22	1	1	1	1	1	1	1
23	1	1	1	1	1	1	1

WINTER SEAS. DECEMBER 1 THRU February 28

HR/DAY	MON	TUES	WEDS	THUR	FRI	SAT	SUN
0	1	1	1	1	1	1	1
1	1	1	1	1	1	1	1
2	1	1	1	1	1	1	1
3	1	1	1	1	1	1	1
4	1	1	1	1	1	1	1
5	1	1	1	1	1	1	1
6	1	1	1	1	1	1	1
7	1	1	1	1	1	1	1
8	1	1	1	1	1	1	1
9	1	1	1	1	1	1	1
10	1	1	1	1	1	1	1
11	1	1	1	1	1	1	1
12	1	1	1	1	1	1	1
13	1	1	1	1	1	1	1
14	1	1	1	1	1	1	1
15	1	1	1	1	1	1	1
16	1	1	1	1	1	1	1
17	1	1	1	1	1	1	1
18	1	1	1	1	1	1	1
19	1	1	1	1	1	1	1
20	1	1	1	1	1	1	1
21	1	1	1	1	1	1	1
22	1	1	1	1	1	1	1
23	1	1	1	1	1	1	1

NOTES:

1) THE NEW YORK STATE THRUWAY IS A LIMITED ACCESS, HIGH-SPEED, HIGH-VOLUME HIGHWAY. TRAFFIC SHALL BE MAINTAINED IN ACCORDANCE WITH THE *MANUAL ON UNIFORM TRAFFIC CONTROL DEVICES (MUTCD)*, THE *WORK ZONE TRAFFIC CONTROL PLANS*, AND THE *STANDARD SPECIFICATIONS* SECTION 619 AS AMENDED BY THE AUTHORITY.

2) LANE CLOSURES ON THE THRUWAY SHALL ONLY BE ALLOWED IN ACCORDANCE WITH THESE TRAFFIC MANAGEMENT TABLE(S), UNLESS INDICATED OTHERWISE IN THE CONTRACT PLANS OR PROPOSAL DOCUMENTS.

3) LANE CLOSURE CHARTS SHALL APPLY AS FOLLOWS:

- 1,150 VEH/HR/LANE: APPLIES TO ALL WORK REQUIRING LANE CLOSURE(S) EXCEPT AS PERMITTED BELOW.

- 1,300 VEH/HR/LANE: APPLIES TO NON-EVASIVE WORK WHERE WORKERS AND/OR EQUIPMENT ARE LOCATED 4 FT. OR MORE FROM TRAVEL (SPACE) LANE, OR AS APPROVED BY THE THRUWAY PROJECT ENGINEER. WORK SHOULD BE ABLE TO BE IMMEDIATELY STOPPED AND LANE CLOSURE(S) REMOVED IN THE EVENT QUEUES, GREATER THAN 1 MILE, DEVELOP.

NEW YORK STATE OF OPPORTUNITY. Thruway Authority

U.S. CUSTOMARY STANDARD SHEET

LANE CLOSURE CHARTS
1,300 VEHICLES PER HOUR
SYRACUSE DIVISION
(SHEET 3 OF 18)

APPROVED SEPTEMBER 1, 2018

/S/ PATRICK THOMPSON, P.E.
DIRECTOR DESIGN SUPPORT
SERVICES BUREAU

ISSUED UNDER DB 18-003

TA 619-36

I-90 WESTBOUND INTERCHANGES 31 TO 32 (1,300 VEH/HR/LANE)

LANES REQUIRED TO BE OPEN BY HOUR AND TIME OF DAY

SPRING SEASON MARCH 1 THRU MAY 20

HR/DAY	MON	TUES	WEDS	THUR	FRI	SAT	SUN
0	1	1	1	1	1	1	1
1	1	1	1	1	1	1	1
2	1	1	1	1	1	1	1
3	1	1	1	1	1	1	1
4	1	1	1	1	1	1	1
5	1	1	1	1	1	1	1
6	1	1	1	1	1	1	1
7	1	1	1	1	1	1	1
8	1	1	1	1	1	1	1
9	1	1	1	1	1	1	1
10	1	1	1	1	1	1	1
11	1	1	1	1	1	1	1
12	1	1	1	1	1	1	1
13	1	1	1	1	1	1	1
14	1	1	1	1	2	1	1
15	1	1	1	1	2	1	1
16	1	1	1	1	2	1	1
17	1	1	1	1	1	1	1
18	1	1	1	1	1	1	1
19	1	1	1	1	1	1	1
20	1	1	1	1	1	1	1
21	1	1	1	1	1	1	1
22	1	1	1	1	1	1	1
23	1	1	1	1	1	1	1

SUMMER SEASON MAY 21 THRU SEPTEMBER 15

HR/DAY	MON	TUES	WEDS	THUR	FRI	SAT	SUN
0	1	1	1	1	1	1	1
1	1	1	1	1	1	1	1
2	1	1	1	1	1	1	1
3	1	1	1	1	1	1	1
4	1	1	1	1	1	1	1
5	1	1	1	1	1	1	1
6	1	1	1	1	1	1	1
7	1	1	1	1	1	1	1
8	1	1	1	1	1	1	1
9	1	1	1	1	1	1	1
10	1	1	1	1	1	2	1
11	1	1	1	1	2	2	2
12	1	1	1	1	2	2	2
13	1	1	1	1	2	2	2
14	2	1	1	1	2	2	2
15	2	1	1	2	2	1	2
16	1	1	1	2	2	1	2
17	1	1	1	1	2	1	2
18	1	1	1	1	2	1	1
19	1	1	1	1	1	1	1
20	1	1	1	1	1	1	1
21	1	1	1	1	1	1	1
22	1	1	1	1	1	1	1
23	1	1	1	1	1	1	1

LANES REQUIRED TO BE OPEN BY HOUR AND TIME OF DAY

FALL SEASON SEPTEMBER 16 THRU November 30

HR/DAY	MON	TUES	WEDS	THUR	FRI	SAT	SUN
0	1	1	1	1	1	1	1
1	1	1	1	1	1	1	1
2	1	1	1	1	1	1	1
3	1	1	1	1	1	1	1
4	1	1	1	1	1	1	1
5	1	1	1	1	1	1	1
6	1	1	1	1	1	1	1
7	1	1	1	1	1	1	1
8	1	1	1	1	1	1	1
9	1	1	1	1	1	1	1
10	1	1	1	1	1	1	1
11	1	1	1	1	1	1	1
12	1	1	1	1	1	1	2
13	1	1	1	1	2	1	2
14	1	1	1	1	2	1	2
15	1	1	1	1	2	1	2
16	1	1	1	1	2	1	2
17	1	1	1	1	2	1	2
18	1	1	1	1	1	1	1
19	1	1	1	1	1	1	1
20	1	1	1	1	1	1	1
21	1	1	1	1	1	1	1
22	1	1	1	1	1	1	1
23	1	1	1	1	1	1	1

WINTER SEAS. DECEMBER 1 THRU February 28

HR/DAY	MON	TUES	WEDS	THUR	FRI	SAT	SUN
0	1	1	1	1	1	1	1
1	1	1	1	1	1	1	1
2	1	1	1	1	1	1	1
3	1	1	1	1	1	1	1
4	1	1	1	1	1	1	1
5	1	1	1	1	1	1	1
6	1	1	1	1	1	1	1
7	1	1	1	1	1	1	1
8	1	1	1	1	1	1	1
9	1	1	1	1	1	1	1
10	1	1	1	1	1	1	1
11	1	1	1	1	1	1	1
12	1	1	1	1	1	1	1
13	1	1	1	1	1	1	1
14	1	1	1	1	1	1	1
15	1	1	1	1	1	1	1
16	1	1	1	1	1	1	1
17	1	1	1	1	1	1	1
18	1	1	1	1	1	1	1
19	1	1	1	1	1	1	1
20	1	1	1	1	1	1	1
21	1	1	1	1	1	1	1
22	1	1	1	1	1	1	1
23	1	1	1	1	1	1	1

I-90 EASTBOUND INTERCHANGES 32 TO 31 (1,300 VEH/HR/LANE)

LANES REQUIRED TO BE OPEN BY HOUR AND TIME OF DAY

SPRING SEASON MARCH 1 THRU MAY 20

HR/DAY	MON	TUES	WEDS	THUR	FRI	SAT	SUN
0	1	1	1	1	1	1	1
1	1	1	1	1	1	1	1
2	1	1	1	1	1	1	1
3	1	1	1	1	1	1	1
4	1	1	1	1	1	1	1
5	1	1	1	1	1	1	1
6	1	1	1	1	1	1	1
7	1	1	1	1	1	1	1
8	1	1	1	1	1	1	1
9	1	1	1	1	1	1	1
10	1	1	1	1	1	1	1
11	1	1	1	1	1	1	1
12	1	1	1	1	1	1	1
13	1	1	1	1	1	1	1
14	1	1	1	1	1	1	1
15	1	1	1	1	1	1	1
16	1	1	1	1	1	1	1
17	1	1	1	1	1	1	1
18	1	1	1	1	1	1	1
19	1	1	1	1	1	1	1
20	1	1	1	1	1	1	1
21	1	1	1	1	1	1	1
22	1	1	1	1	1	1	1
23	1	1	1	1	1	1	1

SUMMER SEASON MAY 21 THRU SEPTEMBER 15

HR/DAY	MON	TUES	WEDS	THUR	FRI	SAT	SUN
0	1	1	1	1	1	1	1
1	1	1	1	1	1	1	1
2	1	1	1	1	1	1	1
3	1	1	1	1	1	1	1
4	1	1	1	1	1	1	1
5	1	1	1	1	1	1	1
6	1	1	1	1	1	1	1
7	1	1	1	1	1	1	1
8	1	1	1	1	1	1	1
9	1	1	1	1	1	1	1
10	1	1	1	1	1	2	1
11	1	1	1	1	2	2	2
12	1	1	1	1	2	2	2
13	1	1	1	1	2	1	2
14	1	1	1	1	2	1	2
15	1	1	1	1	2	1	2
16	1	1	1	1	2	1	2
17	1	1	1	1	2	1	2
18	1	1	1	1	1	1	2
19	1	1	1	1	1	1	1
20	1	1	1	1	1	1	1
21	1	1	1	1	1	1	1
22	1	1	1	1	1	1	1
23	1	1	1	1	1	1	1

LANES REQUIRED TO BE OPEN BY HOUR AND TIME OF DAY

FALL SEASON SEPTEMBER 16 THRU November 30

HR/DAY	MON	TUES	WEDS	THUR	FRI	SAT	SUN
0	1	1	1	1	1	1	1
1	1	1	1	1	1	1	1
2	1	1	1	1	1	1	1
3	1	1	1	1	1	1	1
4	1	1	1	1	1	1	1
5	1	1	1	1	1	1	1
6	1	1	1	1	1	1	1
7	1	1	1	1	1	1	1
8	1	1	1	1	1	1	1
9	1	1	1	1	1	1	1
10	1	1	1	1	1	1	1
11	1	1	1	1	1	1	2
12	1	1	1	1	1	1	2
13	1	1	1	1	1	1	2
14	1	1	1	1	2	1	2
15	1	1	1	1	2	1	2
16	1	1	1	1	2	1	2
17	1	1	1	1	2	1	1
18	1	1	1	1	1	1	1
19	1	1	1	1	1	1	1
20	1	1	1	1	1	1	1
21	1	1	1	1	1	1	1
22	1	1	1	1	1	1	1
23	1	1	1	1	1	1	1

WINTER SEAS. DECEMBER 1 THRU February 28

HR/DAY	MON	TUES	WEDS	THUR	FRI	SAT	SUN
0	1	1	1	1	1	1	1
1	1	1	1	1	1	1	1
2	1	1	1	1	1	1	1
3	1	1	1	1	1	1	1
4	1	1	1	1	1	1	1
5	1	1	1	1	1	1	1
6	1	1	1	1	1	1	1
7	1	1	1	1	1	1	1
8	1	1	1	1	1	1	1
9	1	1	1	1	1	1	1
10	1	1	1	1	1	1	1
11	1	1	1	1	1	1	1
12	1	1	1	1	1	1	1
13	1	1	1	1	1	1	1
14	1	1	1	1	1	1	1
15	1	1	1	1	1	1	1
16	1	1	1	1	1	1	1
17	1	1	1	1	1	1	1
18	1	1	1	1	1	1	1
19	1	1	1	1	1	1	1
20	1	1	1	1	1	1	1
21	1	1	1	1	1	1	1
22	1	1	1	1	1	1	1
23	1	1	1	1	1	1	1

NOTES:

1) THE NEW YORK STATE THRUWAY IS A LIMITED ACCESS, HIGH-SPEED, HIGH-VOLUME HIGHWAY. TRAFFIC SHALL BE MAINTAINED IN ACCORDANCE WITH THE *MANUAL ON UNIFORM TRAFFIC CONTROL DEVICES (MUTCD)*, THE *WORK ZONE TRAFFIC CONTROL PLANS*, AND THE *STANDARD SPECIFICATIONS* SECTION 619 AS AMENDED BY THE AUTHORITY.

2) LANE CLOSURES ON THE THRUWAY SHALL ONLY BE ALLOWED IN ACCORDANCE WITH THESE TRAFFIC MANAGEMENT TABLE(S), UNLESS INDICATED OTHERWISE IN THE CONTRACT PLANS OR PROPOSAL DOCUMENTS.

3) LANE CLOSURE CHARTS SHALL APPLY AS FOLLOWS:

- 1,150 VEH/HR/LANE: APPLIES TO ALL WORK REQUIRING LANE CLOSURE(S) EXCEPT AS PERMITTED BELOW.

- 1,300 VEH/HR/LANE: APPLIES TO NON-EVASIVE WORK WHERE WORKERS AND/OR EQUIPMENT ARE LOCATED 4 FT. OR MORE FROM TRAVEL (SPACE) LANE, OR AS APPROVED BY THE THRUWAY PROJECT ENGINEER. WORK SHOULD BE ABLE TO BE IMMEDIATELY STOPPED AND LANE CLOSURE(S) REMOVED IN THE EVENT QUEUES, GREATER THAN 1 MILE, DEVELOP.

NEW YORK STATE OF OPPORTUNITY. Thruway Authority

U.S. CUSTOMARY STANDARD SHEET

LANE CLOSURE CHARTS
1,300 VEHICLES PER HOUR
SYRACUSE DIVISION
(SHEET 4 OF 18)

APPROVED SEPTEMBER 1, 2018

/S/ PATRICK THOMPSON, P.E.
DIRECTOR DESIGN SUPPORT SERVICES BUREAU

ISSUED UNDER DB 18-003

TA 619-36

I-90 WESTBOUND INTERCHANGES 32 TO 33 (1,300 VEH/HR/LANE)

LANES REQUIRED TO BE OPEN BY HOUR AND TIME OF DAY

SPRING SEASON MARCH 1 THRU MAY 20

HR/DAY	MON	TUES	WEDS	THUR	FRI	SAT	SUN
0	1	1	1	1	1	1	1
1	1	1	1	1	1	1	1
2	1	1	1	1	1	1	1
3	1	1	1	1	1	1	1
4	1	1	1	1	1	1	1
5	1	1	1	1	1	1	1
6	1	1	1	1	1	1	1
7	1	1	1	1	1	1	1
8	1	1	1	1	1	1	1
9	1	1	1	1	1	1	1
10	1	1	1	1	1	1	1
11	1	1	1	1	1	1	1
12	1	1	1	1	1	1	1
13	1	1	1	1	1	1	1
14	1	1	1	1	2	1	1
15	1	1	1	1	2	1	1
16	1	1	1	1	2	1	2
17	1	1	1	1	2	1	2
18	1	1	1	1	1	1	1
19	1	1	1	1	1	1	1
20	1	1	1	1	1	1	1
21	1	1	1	1	1	1	1
22	1	1	1	1	1	1	1
23	1	1	1	1	1	1	1

SUMMER SEASON MAY 21 THRU SEPTEMBER 15

HR/DAY	MON	TUES	WEDS	THUR	FRI	SAT	SUN
0	1	1	1	1	1	1	1
1	1	1	1	1	1	1	1
2	1	1	1	1	1	1	1
3	1	1	1	1	1	1	1
4	1	1	1	1	1	1	1
5	1	1	1	1	1	1	1
6	1	1	1	1	1	1	1
7	1	1	1	1	1	1	1
8	1	1	1	1	1	1	1
9	1	1	1	1	1	1	1
10	1	1	1	1	2	2	1
11	2	1	1	1	2	2	2
12	2	1	1	1	2	2	2
13	2	1	1	2	2	2	2
14	2	1	1	2	2	2	2
15	2	1	2	2	2	2	2
16	2	1	2	2	2	2	2
17	1	1	2	2	2	1	2
18	1	1	1	1	2	1	2
19	1	1	1	1	1	1	1
20	1	1	1	1	1	1	1
21	1	1	1	1	1	1	1
22	1	1	1	1	1	1	1
23	1	1	1	1	1	1	1

LANES REQUIRED TO BE OPEN BY HOUR AND TIME OF DAY

FALL SEASON SEPTEMBER 16 THRU November 30

HR/DAY	MON	TUES	WEDS	THUR	FRI	SAT	SUN
0	1	1	1	1	1	1	1
1	1	1	1	1	1	1	1
2	1	1	1	1	1	1	1
3	1	1	1	1	1	1	1
4	1	1	1	1	1	1	1
5	1	1	1	1	1	1	1
6	1	1	1	1	1	1	1
7	1	1	1	1	1	1	1
8	1	1	1	1	1	1	1
9	1	1	1	1	1	1	1
10	1	1	1	1	1	2	1
11	1	1	1	1	1	2	2
12	1	1	1	1	1	2	2
13	1	1	1	1	2	2	2
14	2	1	1	1	2	1	2
15	2	2	2	2	2	1	2
16	2	2	2	2	2	1	2
17	1	1	2	2	2	1	2
18	1	1	1	1	2	1	2
19	1	1	1	1	1	1	1
20	1	1	1	1	1	1	1
21	1	1	1	1	1	1	1
22	1	1	1	1	1	1	1
23	1	1	1	1	1	1	1

WINTER SEAS. DECEMBER 1 THRU February 28

HR/DAY	MON	TUES	WEDS	THUR	FRI	SAT	SUN
0	1	1	1	1	1	1	1
1	1	1	1	1	1	1	1
2	1	1	1	1	1	1	1
3	1	1	1	1	1	1	1
4	1	1	1	1	1	1	1
5	1	1	1	1	1	1	1
6	1	1	1	1	1	1	1
7	1	1	1	1	1	1	1
8	1	1	1	1	1	1	1
9	1	1	1	1	1	1	1
10	1	1	1	1	1	1	1
11	1	1	1	1	1	1	1
12	1	1	1	1	1	1	1
13	1	1	1	1	1	1	1
14	1	1	1	1	1	1	1
15	1	1	1	1	2	1	1
16	1	1	1	1	2	1	1
17	1	1	1	1	2	1	1
18	1	1	1	1	1	1	1
19	1	1	1	1	1	1	1
20	1	1	1	1	1	1	1
21	1	1	1	1	1	1	1
22	1	1	1	1	1	1	1
23	1	1	1	1	1	1	1

I-90 EASTBOUND INTERCHANGES 33 TO 32 (1,300 VEH/HR/LANE)

LANES REQUIRED TO BE OPEN BY HOUR AND TIME OF DAY

SPRING SEASON MARCH 1 THRU MAY 20

HR/DAY	MON	TUES	WEDS	THUR	FRI	SAT	SUN
0	1	1	1	1	1	1	1
1	1	1	1	1	1	1	1
2	1	1	1	1	1	1	1
3	1	1	1	1	1	1	1
4	1	1	1	1	1	1	1
5	1	1	1	1	1	1	1
6	1	1	1	1	1	1	1
7	1	1	1	1	1	1	1
8	1	1	1	1	1	1	1
9	1	1	1	1	1	1	1
10	1	1	1	1	1	1	1
11	1	1	1	1	1	1	1
12	1	1	1	1	1	1	1
13	1	1	1	1	1	1	1
14	1	1	1	1	2	1	2
15	1	1	1	1	2	1	2
16	1	1	1	1	2	1	2
17	1	1	1	1	2	1	2
18	1	1	1	1	1	1	1
19	1	1	1	1	1	1	1
20	1	1	1	1	1	1	1
21	1	1	1	1	1	1	1
22	1	1	1	1	1	1	1
23	1	1	1	1	1	1	1

SUMMER SEASON MAY 21 THRU SEPTEMBER 15

HR/DAY	MON	TUES	WEDS	THUR	FRI	SAT	SUN
0	1	1	1	1	1	1	1
1	1	1	1	1	1	1	1
2	1	1	1	1	1	1	1
3	1	1	1	1	1	1	1
4	1	1	1	1	1	1	1
5	1	1	1	1	1	1	1
6	1	1	1	1	1	1	1
7	1	1	1	1	1	1	1
8	1	1	1	1	1	1	1
9	1	1	1	1	1	1	1
10	1	1	1	1	2	2	2
11	1	1	1	1	2	2	2
12	1	1	1	1	2	2	2
13	1	1	1	1	2	1	2
14	1	1	1	1	2	1	2
15	2	1	1	2	2	1	2
16	2	1	1	2	2	1	2
17	2	1	1	2	2	1	2
18	1	1	1	1	2	1	2
19	1	1	1	1	1	1	1
20	1	1	1	1	1	1	1
21	1	1	1	1	1	1	1
22	1	1	1	1	1	1	1
23	1	1	1	1	1	1	1

LANES REQUIRED TO BE OPEN BY HOUR AND TIME OF DAY

FALL SEASON SEPTEMBER 16 THRU November 30

HR/DAY	MON	TUES	WEDS	THUR	FRI	SAT	SUN
0	1	1	1	1	1	1	1
1	1	1	1	1	1	1	1
2	1	1	1	1	1	1	1
3	1	1	1	1	1	1	1
4	1	1	1	1	1	1	1
5	1	1	1	1	1	1	1
6	1	1	1	1	1	1	1
7	1	1	1	1	1	1	1
8	1	1	1	1	1	1	1
9	1	1	1	1	1	1	1
10	1	1	1	1	1	1	1
11	1	1	1	1	2	1	2
12	1	1	1	1	1	1	2
13	1	1	1	1	2	1	2
14	1	1	1	1	2	1	2
15	1	1	1	1	2	1	2
16	1	1	1	1	2	1	2
17	1	1	1	1	2	1	2
18	1	1	1	1	1	1	2
19	1	1	1	1	1	1	1
20	1	1	1	1	1	1	1
21	1	1	1	1	1	1	1
22	1	1	1	1	1	1	1
23	1	1	1	1	1	1	1

WINTER SEAS. DECEMBER 1 THRU February 28

HR/DAY	MON	TUES	WEDS	THUR	FRI	SAT	SUN
0	1	1	1	1	1	1	1
1	1	1	1	1	1	1	1
2	1	1	1	1	1	1	1
3	1	1	1	1	1	1	1
4	1	1	1	1	1	1	1
5	1	1	1	1	1	1	1
6	1	1	1	1	1	1	1
7	1	1	1	1	1	1	1
8	1	1	1	1	1	1	1
9	1	1	1	1	1	1	1
10	1	1	1	1	1	1	1
11	1	1	1	1	1	1	1
12	1	1	1	1	1	1	1
13	1	1	1	1	1	1	1
14	1	1	1	1	1	1	1
15	1	1	1	1	1	1	1
16	1	1	1	1	1	1	1
17	1	1	1	1	1	1	1
18	1	1	1	1	1	1	1
19	1	1	1	1	1	1	1
20	1	1	1	1	1	1	1
21	1	1	1	1	1	1	1
22	1	1	1	1	1	1	1
23	1	1	1	1	1	1	1

NOTES:

1) THE NEW YORK STATE THRUWAY IS A LIMITED ACCESS, HIGH-SPEED, HIGH-VOLUME HIGHWAY. TRAFFIC SHALL BE MAINTAINED IN ACCORDANCE WITH THE *MANUAL ON UNIFORM TRAFFIC CONTROL DEVICES (MUTCD)*, THE *WORK ZONE TRAFFIC CONTROL PLANS*, AND THE *STANDARD SPECIFICATIONS* SECTION 619 AS AMENDED BY THE AUTHORITY.

2) LANE CLOSURES ON THE THRUWAY SHALL ONLY BE ALLOWED IN ACCORDANCE WITH THESE TRAFFIC MANAGEMENT TABLE(S), UNLESS INDICATED OTHERWISE IN THE CONTRACT PLANS OR PROPOSAL DOCUMENTS.

3) LANE CLOSURE CHARTS SHALL APPLY AS FOLLOWS:

- 1,150 VEH/HR/LANE: APPLIES TO ALL WORK REQUIRING LANE CLOSURE(S) EXCEPT AS PERMITTED BELOW.

- 1,300 VEH/HR/LANE: APPLIES TO NON-EVASIVE WORK WHERE WORKERS AND/OR EQUIPMENT ARE LOCATED 4 FT. OR MORE FROM TRAVEL (SPACE) LANE, OR AS APPROVED BY THE THRUWAY PROJECT ENGINEER. WORK SHOULD BE ABLE TO BE IMMEDIATELY STOPPED AND LANE CLOSURE(S) REMOVED IN THE EVENT QUEUES, GREATER THAN 1 MILE, DEVELOP.

NEW YORK STATE OF OPPORTUNITY. Thruway Authority

U.S. CUSTOMARY STANDARD SHEET

LANE CLOSURE CHARTS
1,300 VEHICLES PER HOUR
SYRACUSE DIVISION
(SHEET 5 OF 18)

APPROVED SEPTEMBER 1, 2018

/S/ PATRICK THOMPSON, P.E.
DIRECTOR DESIGN SUPPORT SERVICES BUREAU

ISSUED UNDER DB 18-003

TA 619-36

I-90 WESTBOUND INTERCHANGES 33 TO 34 (1,300 VEH/HR/LANE)

LANES REQUIRED TO BE OPEN BY HOUR AND TIME OF DAY

SPRING SEASON MARCH 1 THRU MAY 20

HR/DAY	MON	TUES	WEDS	THUR	FRI	SAT	SUN
0	1	1	1	1	1	1	1
1	1	1	1	1	1	1	1
2	1	1	1	1	1	1	1
3	1	1	1	1	1	1	1
4	1	1	1	1	1	1	1
5	1	1	1	1	1	1	1
6	1	1	1	1	1	1	1
7	1	1	1	1	1	1	1
8	1	1	1	1	1	1	1
9	1	1	1	1	1	1	1
10	1	1	1	1	1	1	1
11	1	1	1	1	1	1	1
12	2	1	1	1	2	1	1
13	2	1	1	1	2	1	2
14	2	1	1	2	2	1	2
15	2	2	2	2	2	1	2
16	2	2	2	2	2	1	2
17	2	1	2	2	2	1	2
18	1	1	1	1	2	1	2
19	1	1	1	1	1	1	2
20	1	1	1	1	1	1	1
21	1	1	1	1	1	1	1
22	1	1	1	1	1	1	1
23	1	1	1	1	1	1	1

SUMMER SEASON MAY 21 THRU SEPTEMBER 15

HR/DAY	MON	TUES	WEDS	THUR	FRI	SAT	SUN
0	1	1	1	1	1	1	1
1	1	1	1	1	1	1	1
2	1	1	1	1	1	1	1
3	1	1	1	1	1	1	1
4	1	1	1	1	1	1	1
5	1	1	1	1	1	1	1
6	1	1	1	1	1	1	1
7	1	1	1	1	1	1	1
8	1	1	1	1	1	1	1
9	1	1	1	1	2	2	1
10	2	1	1	2	2	2	2
11	2	1	2	2	2	2	2
12	2	1	2	2	2	2	2
13	2	2	2	2	2	2	2
14	2	2	2	2	2	2	2
15	2	2	2	2	2	2	2
16	2	2	2	2	2	2	2
17	2	2	2	2	2	2	2
18	1	1	1	1	2	1	2
19	1	1	1	1	2	1	2
20	1	1	1	1	1	1	1
21	1	1	1	1	1	1	1
22	1	1	1	1	1	1	1
23	1	1	1	1	1	1	1

LANES REQUIRED TO BE OPEN BY HOUR AND TIME OF DAY

FALL SEASON SEPTEMBER 16 THRU November 30

HR/DAY	MON	TUES	WEDS	THUR	FRI	SAT	SUN
0	1	1	1	1	1	1	1
1	1	1	1	1	1	1	1
2	1	1	1	1	1	1	1
3	1	1	1	1	1	1	1
4	1	1	1	1	1	1	1
5	1	1	1	1	1	1	1
6	1	1	1	1	1	1	1
7	1	1	1	1	1	1	1
8	1	1	1	1	1	1	1
9	1	1	1	1	1	1	1
10	1	1	1	1	1	2	1
11	2	1	1	1	2	2	2
12	2	1	1	1	2	2	2
13	2	1	1	1	2	2	2
14	2	2	2	2	2	2	2
15	2	2	2	2	2	2	2
16	2	2	2	2	2	2	2
17	2	2	2	2	2	1	2
18	1	1	1	1	2	1	2
19	1	1	1	1	1	1	2
20	1	1	1	1	1	1	1
21	1	1	1	1	1	1	1
22	1	1	1	1	1	1	1
23	1	1	1	1	1	1	1

WINTER SEAS. DECEMBER 1 THRU February 28

HR/DAY	MON	TUES	WEDS	THUR	FRI	SAT	SUN
0	1	1	1	1	1	1	1
1	1	1	1	1	1	1	1
2	1	1	1	1	1	1	1
3	1	1	1	1	1	1	1
4	1	1	1	1	1	1	1
5	1	1	1	1	1	1	1
6	1	1	1	1	1	1	1
7	1	1	1	1	1	1	1
8	1	1	1	1	1	1	1
9	1	1	1	1	1	1	1
10	1	1	1	1	1	1	1
11	1	1	1	1	1	1	1
12	1	1	1	1	1	1	1
13	1	1	1	1	2	1	1
14	2	1	1	1	2	1	2
15	2	1	2	2	2	1	2
16	2	1	2	2	2	1	2
17	1	1	2	2	2	1	1
18	1	1	1	1	1	1	1
19	1	1	1	1	1	1	1
20	1	1	1	1	1	1	1
21	1	1	1	1	1	1	1
22	1	1	1	1	1	1	1
23	1	1	1	1	1	1	1

I-90 EASTBOUND INTERCHANGES 34 TO 33 (1,300 VEH/HR/LANE)

LANES REQUIRED TO BE OPEN BY HOUR AND TIME OF DAY

SPRING SEASON MARCH 1 THRU MAY 20

HR/DAY	MON	TUES	WEDS	THUR	FRI	SAT	SUN
0	1	1	1	1	1	1	1
1	1	1	1	1	1	1	1
2	1	1	1	1	1	1	1
3	1	1	1	1	1	1	1
4	1	1	1	1	1	1	1
5	1	1	1	1	1	1	1
6	1	1	1	1	1	1	1
7	1	1	1	1	1	1	1
8	1	1	1	1	1	1	1
9	1	1	1	1	1	1	1
10	1	1	1	1	2	1	1
11	1	1	1	1	2	1	2
12	1	1	1	1	2	1	2
13	1	1	1	1	2	1	2
14	1	1	1	1	2	1	2
15	2	1	2	2	2	1	2
16	2	2	2	2	2	1	2
17	2	2	2	2	2	1	2
18	1	1	1	1	2	1	2
19	1	1	1	1	1	1	1
20	1	1	1	1	1	1	1
21	1	1	1	1	1	1	1
22	1	1	1	1	1	1	1
23	1	1	1	1	1	1	1

SUMMER SEASON MAY 21 THRU SEPTEMBER 15

HR/DAY	MON	TUES	WEDS	THUR	FRI	SAT	SUN
0	1	1	1	1	1	1	1
1	1	1	1	1	1	1	1
2	1	1	1	1	1	1	1
3	1	1	1	1	1	1	1
4	1	1	1	1	1	1	1
5	1	1	1	1	1	1	1
6	1	1	1	1	1	1	1
7	2	1	2	2	1	1	1
8	2	2	2	2	2	1	1
9	2	2	2	2	2	2	1
10	2	2	2	2	2	2	2
11	2	2	2	2	2	2	2
12	2	2	2	2	2	2	2
13	2	2	2	2	2	2	2
14	2	2	2	2	2	2	2
15	2	2	2	2	2	2	2
16	2	2	2	2	2	2	2
17	2	2	2	2	2	2	2
18	1	1	2	2	2	2	2
19	1	1	1	1	2	1	2
20	1	1	1	1	1	1	1
21	1	1	1	1	1	1	1
22	1	1	1	1	1	1	1
23	1	1	1	1	1	1	1

LANES REQUIRED TO BE OPEN BY HOUR AND TIME OF DAY

FALL SEASON SEPTEMBER 16 THRU November 30

HR/DAY	MON	TUES	WEDS	THUR	FRI	SAT	SUN
0	1	1	1	1	1	1	1
1	1	1	1	1	1	1	1
2	1	1	1	1	1	1	1
3	1	1	1	1	1	1	1
4	1	1	1	1	1	1	1
5	1	1	1	1	1	1	1
6	1	1	1	1	1	1	1
7	1	1	1	1	1	1	1
8	1	1	1	1	2	1	1
9	1	1	1	1	2	1	1
10	2	1	1	2	2	2	2
11	2	1	2	2	2	2	2
12	2	1	2	2	2	2	2
13	2	1	1	2	2	2	2
14	2	2	2	2	2	2	2
15	2	2	2	2	2	2	2
16	2	2	2	2	2	2	2
17	2	2	2	2	2	2	2
18	1	1	1	1	2	2	2
19	1	1	1	1	2	1	1
20	1	1	1	1	1	1	1
21	1	1	1	1	1	1	1
22	1	1	1	1	1	1	1
23	1	1	1	1	1	1	1

WINTER SEAS. DECEMBER 1 THRU February 28

HR/DAY	MON	TUES	WEDS	THUR	FRI	SAT	SUN
0	1	1	1	1	1	1	1
1	1	1	1	1	1	1	1
2	1	1	1	1	1	1	1
3	1	1	1	1	1	1	1
4	1	1	1	1	1	1	1
5	1	1	1	1	1	1	1
6	1	1	1	1	1	1	1
7	1	1	1	1	1	1	1
8	1	1	1	1	1	1	1
9	1	1	1	1	1	1	1
10	1	1	1	1	1	1	1
11	1	1	1	1	2	1	2
12	1	1	1	1	2	1	2
13	1	1	1	1	2	1	2
14	1	1	2	1	2	2	2
15	2	1	2	2	2	2	2
16	2	2	2	2	2	2	2
17	2	2	2	2	2	2	2
18	1	1	1	1	2	1	1
19	1	1	1	1	1	1	1
20	1	1	1	1	1	1	1
21	1	1	1	1	1	1	1
22	1	1	1	1	1	1	1
23	1	1	1	1	1	1	1

NOTES:

1) THE NEW YORK STATE THRUWAY IS A LIMITED ACCESS, HIGH-SPEED, HIGH-VOLUME HIGHWAY. TRAFFIC SHALL BE MAINTAINED IN ACCORDANCE WITH THE *MANUAL ON UNIFORM TRAFFIC CONTROL DEVICES (MUTCD)*, THE *WORK ZONE TRAFFIC CONTROL PLANS*, AND THE *STANDARD SPECIFICATIONS* SECTION 619 AS AMENDED BY THE AUTHORITY.

2) LANE CLOSURES ON THE THRUWAY SHALL ONLY BE ALLOWED IN ACCORDANCE WITH THESE TRAFFIC MANAGEMENT TABLE(S), UNLESS INDICATED OTHERWISE IN THE CONTRACT PLANS OR PROPOSAL DOCUMENTS.

3) LANE CLOSURE CHARTS SHALL APPLY AS FOLLOWS:

- 1,150 VEH/HR/LANE: APPLIES TO ALL WORK REQUIRING LANE CLOSURE(S) EXCEPT AS PERMITTED BELOW.

- 1,300 VEH/HR/LANE: APPLIES TO NON-EVASIVE WORK WHERE WORKERS AND/OR EQUIPMENT ARE LOCATED 4 FT. OR MORE FROM TRAVEL (SPACE) LANE, OR AS APPROVED BY THE THRUWAY PROJECT ENGINEER. WORK SHOULD BE ABLE TO BE IMMEDIATELY STOPPED AND LANE CLOSURE(S) REMOVED IN THE EVENT QUEUES, GREATER THAN 1 MILE, DEVELOP.

NEW YORK STATE OF OPPORTUNITY. Thruway Authority

U.S. CUSTOMARY STANDARD SHEET

LANE CLOSURE CHARTS
1,300 VEHICLES PER HOUR
SYRACUSE DIVISION
(SHEET 6 OF 18)

APPROVED SEPTEMBER 1, 2018

/S/ PATRICK THOMPSON, P.E.
DIRECTOR DESIGN SUPPORT SERVICES BUREAU

ISSUED UNDER DB 18-003

TA 619-36

I-90 WESTBOUND INTERCHANGES 34 TO 34A (1,300 VEH/HR/LANE)

LANES REQUIRED TO BE OPEN BY HOUR AND TIME OF DAY

SPRING SEASON MARCH 1 THRU MAY 20

HR/DAY	MON	TUES	WEDS	THUR	FRI	SAT	SUN
0	1	1	1	1	1	1	1
1	1	1	1	1	1	1	1
2	1	1	1	1	1	1	1
3	1	1	1	1	1	1	1
4	1	1	1	1	1	1	1
5	1	1	1	1	1	1	1
6	1	1	1	1	1	1	1
7	2	2	2	2	2	1	1
8	2	1	1	1	1	1	1
9	1	1	1	1	1	1	1
10	1	1	1	1	1	2	1
11	2	1	1	1	2	2	1
12	2	1	1	1	2	2	2
13	2	1	1	1	2	2	2
14	2	1	2	2	2	2	2
15	2	2	2	2	2	1	2
16	2	2	2	2	2	1	2
17	2	2	2	2	2	1	2
18	1	1	1	1	2	1	2
19	1	1	1	1	1	1	2
20	1	1	1	1	1	1	1
21	1	1	1	1	1	1	1
22	1	1	1	1	1	1	1
23	1	1	1	1	1	1	1

SUMMER SEASON MAY 21 THRU SEPTEMBER 15

HR/DAY	MON	TUES	WEDS	THUR	FRI	SAT	SUN
0	1	1	1	1	1	1	1
1	1	1	1	1	1	1	1
2	1	1	1	1	1	1	1
3	1	1	1	1	1	1	1
4	1	1	1	1	1	1	1
5	1	1	1	1	1	1	1
6	2	1	1	1	1	1	1
7	2	2	2	2	2	1	1
8	2	2	2	2	2	1	1
9	2	2	2	2	2	2	1
10	2	2	2	2	2	2	2
11	2	2	2	2	2	2	2
12	2	2	2	2	2	2	2
13	2	2	2	2	2	2	2
14	2	2	2	2	2	2	2
15	2	2	2	2	2	2	2
16	2	2	2	2	2	2	2
17	2	2	2	2	2	2	2
18	2	1	2	2	2	2	2
19	1	1	1	1	2	1	2
20	1	1	1	1	1	1	2
21	1	1	1	1	1	1	1
22	1	1	1	1	1	1	1
23	1	1	1	1	1	1	1

LANES REQUIRED TO BE OPEN BY HOUR AND TIME OF DAY

FALL SEASON SEPTEMBER 16 THRU November 30

HR/DAY	MON	TUES	WEDS	THUR	FRI	SAT	SUN
0	1	1	1	1	1	1	1
1	1	1	1	1	1	1	1
2	1	1	1	1	1	1	1
3	1	1	1	1	1	1	1
4	1	1	1	1	1	1	1
5	1	1	1	1	1	1	1
6	1	1	1	1	1	1	1
7	2	2	2	2	2	1	1
8	2	2	2	2	2	1	1
9	1	1	1	1	2	1	1
10	1	1	1	1	2	2	2
11	2	1	2	2	2	2	2
12	2	1	2	2	2	2	2
13	2	1	2	2	2	2	2
14	2	2	2	2	2	2	2
15	2	2	2	2	2	2	2
16	2	2	2	2	2	2	2
17	2	2	2	2	2	2	2
18	1	1	1	1	2	1	2
19	1	1	1	1	2	1	2
20	1	1	1	1	1	1	1
21	1	1	1	1	1	1	1
22	1	1	1	1	1	1	1
23	1	1	1	1	1	1	1

WINTER SEAS. DECEMBER 1 THRU February 28

HR/DAY	MON	TUES	WEDS	THUR	FRI	SAT	SUN
0	1	1	1	1	1	1	1
1	1	1	1	1	1	1	1
2	1	1	1	1	1	1	1
3	1	1	1	1	1	1	1
4	1	1	1	1	1	1	1
5	1	1	1	1	1	1	1
6	1	1	1	1	1	1	1
7	2	2	2	2	2	1	1
8	1	2	1	2	1	1	1
9	1	1	1	1	1	1	1
10	1	1	1	1	1	2	1
11	1	1	1	1	1	2	1
12	1	1	1	1	2	2	2
13	2	1	2	1	2	2	2
14	2	1	2	2	2	2	2
15	2	2	2	2	2	2	2
16	2	2	2	2	2	1	2
17	2	2	2	2	2	1	1
18	1	1	1	1	2	1	1
19	1	1	1	1	1	1	1
20	1	1	1	1	1	1	1
21	1	1	1	1	1	1	1
22	1	1	1	1	1	1	1
23	1	1	1	1	1	1	1

I-90 EASTBOUND INTERCHANGES 34A TO 34 (1,300 VEH/HR/LANE)

LANES REQUIRED TO BE OPEN BY HOUR AND TIME OF DAY

SPRING SEASON MARCH 1 THRU MAY 20

HR/DAY	MON	TUES	WEDS	THUR	FRI	SAT	SUN
0	1	1	1	1	1	1	1
1	1	1	1	1	1	1	1
2	1	1	1	1	1	1	1
3	1	1	1	1	1	1	1
4	1	1	1	1	1	1	1
5	1	1	1	1	1	1	1
6	1	1	1	1	1	1	1
7	1	1	1	1	1	1	1
8	1	1	1	1	1	1	1
9	1	1	1	1	2	1	1
10	1	1	1	1	2	2	1
11	2	1	1	1	2	2	2
12	2	1	1	1	2	2	2
13	2	1	1	2	2	2	2
14	2	1	2	2	2	2	2
15	2	2	2	2	2	2	2
16	2	2	2	2	2	2	2
17	2	2	2	2	2	2	2
18	1	1	1	1	2	1	2
19	1	1	1	1	1	1	1
20	1	1	1	1	1	1	1
21	1	1	1	1	1	1	1
22	1	1	1	1	1	1	1
23	1	1	1	1	1	1	1

SUMMER SEASON MAY 21 THRU SEPTEMBER 15

HR/DAY	MON	TUES	WEDS	THUR	FRI	SAT	SUN
0	1	1	1	1	1	1	1
1	1	1	1	1	1	1	1
2	1	1	1	1	1	1	1
3	1	1	1	1	1	1	1
4	1	1	1	1	1	1	1
5	1	1	1	1	1	1	1
6	1	1	1	1	1	1	1
7	2	1	1	1	1	1	1
8	2	2	2	2	2	1	1
9	2	2	2	2	2	2	2
10	2	2	2	2	2	2	2
11	2	2	2	2	2	2	2
12	2	2	2	2	2	2	2
13	2	2	2	2	2	2	2
14	2	2	2	2	2	2	2
15	2	2	2	2	2	2	2
16	2	2	2	2	2	2	2
17	2	2	2	2	2	2	2
18	2	2	2	2	2	2	2
19	1	1	1	1	2	1	2
20	1	1	1	1	1	1	1
21	1	1	1	1	1	1	1
22	1	1	1	1	1	1	1
23	1	1	1	1	1	1	1

LANES REQUIRED TO BE OPEN BY HOUR AND TIME OF DAY

FALL SEASON SEPTEMBER 16 THRU November 30

HR/DAY	MON	TUES	WEDS	THUR	FRI	SAT	SUN
0	1	1	1	1	1	1	1
1	1	1	1	1	1	1	1
2	1	1	1	1	1	1	1
3	1	1	1	1	1	1	1
4	1	1	1	1	1	1	1
5	1	1	1	1	1	1	1
6	1	1	1	1	1	1	1
7	1	1	1	2	1	1	1
8	1	1	1	2	2	1	1
9	1	1	1	2	2	2	1
10	2	1	2	2	2	2	2
11	2	1	2	2	2	2	2
12	2	1	2	2	2	2	2
13	2	2	2	2	2	2	2
14	2	2	2	2	2	2	2
15	2	2	2	2	2	2	2
16	2	2	2	2	2	2	2
17	2	2	2	2	2	2	2
18	1	2	1	1	2	1	2
19	1	1	1	1	2	1	1
20	1	1	1	1	1	1	1
21	1	1	1	1	1	1	1
22	1	1	1	1	1	1	1
23	1	1	1	1	1	1	1

WINTER SEAS. DECEMBER 1 THRU February 28

HR/DAY	MON	TUES	WEDS	THUR	FRI	SAT	SUN
0	1	1	1	1	1	1	1
1	1	1	1	1	1	1	1
2	1	1	1	1	1	1	1
3	1	1	1	1	1	1	1
4	1	1	1	1	1	1	1
5	1	1	1	1	1	1	1
6	1	1	1	1	1	1	1
7	1	1	1	1	1	1	1
8	1	1	1	1	1	1	1
9	1	1	1	1	1	1	1
10	1	1	1	1	1	1	1
11	2	1	2	1	2	2	2
12	2	1	2	1	2	2	2
13	2	1	2	1	2	2	2
14	2	2	2	2	2	2	2
15	2	2	2	2	2	2	2
16	2	2	2	2	2	2	2
17	2	2	2	2	2	2	2
18	1	1	1	1	2	1	1
19	1	1	1	1	1	1	1
20	1	1	1	1	1	1	1
21	1	1	1	1	1	1	1
22	1	1	1	1	1	1	1
23	1	1	1	1	1	1	1

NOTES:

1) THE NEW YORK STATE THRUWAY IS A LIMITED ACCESS, HIGH-SPEED, HIGH-VOLUME HIGHWAY. TRAFFIC SHALL BE MAINTAINED IN ACCORDANCE WITH THE *MANUAL ON UNIFORM TRAFFIC CONTROL DEVICES (MUTCD)*, THE *WORK ZONE TRAFFIC CONTROL PLANS*, AND THE *STANDARD SPECIFICATIONS* SECTION 619 AS AMENDED BY THE AUTHORITY.

2) LANE CLOSURES ON THE THRUWAY SHALL ONLY BE ALLOWED IN ACCORDANCE WITH THESE TRAFFIC MANAGEMENT TABLE(S), UNLESS INDICATED OTHERWISE IN THE CONTRACT PLANS OR PROPOSAL DOCUMENTS.

3) LANE CLOSURE CHARTS SHALL APPLY AS FOLLOWS:

- 1,150 VEH/HR/LANE: APPLIES TO ALL WORK REQUIRING LANE CLOSURE(S) EXCEPT AS PERMITTED BELOW.

- 1,300 VEH/HR/LANE: APPLIES TO NON-EVASIVE WORK WHERE WORKERS AND/OR EQUIPMENT ARE LOCATED 4 FT. OR MORE FROM TRAVEL (SPACE) LANE, OR AS APPROVED BY THE THRUWAY PROJECT ENGINEER. WORK SHOULD BE ABLE TO BE IMMEDIATELY STOPPED AND LANE CLOSURE(S) REMOVED IN THE EVENT QUEUES, GREATER THAN 1 MILE, DEVELOP.

NEW YORK STATE OF OPPORTUNITY. Thruway Authority

U.S. CUSTOMARY STANDARD SHEET

LANE CLOSURE CHARTS
1,300 VEHICLES PER HOUR
SYRACUSE DIVISION
(SHEET 7 OF 18)

APPROVED SEPTEMBER 1, 2018

/S/ PATRICK THOMPSON, P.E.
DIRECTOR DESIGN SUPPORT
SERVICES BUREAU

ISSUED UNDER DB 18-003

TA 619-36

I-90 WESTBOUND INTERCHANGES 34A TO 35 (1,300 VEH/HR/LANE)

LANES REQUIRED TO BE OPEN BY HOUR AND TIME OF DAY

SPRING SEASON MARCH 1 THRU MAY 20

HR/DAY	MON	TUES	WEDS	THUR	FRI	SAT	SUN
0	1	1	1	1	1	1	1
1	1	1	1	1	1	1	1
2	1	1	1	1	1	1	1
3	1	1	1	1	1	1	1
4	1	1	1	1	1	1	1
5	1	1	1	1	1	1	1
6	1	1	1	1	1	1	1
7	1	1	1	1	1	1	1
8	1	1	1	1	1	1	1
9	1	1	1	1	1	1	1
10	1	1	1	1	1	1	1
11	1	1	1	1	1	1	1
12	1	1	1	1	1	1	1
13	1	1	1	1	1	1	1
14	1	1	1	1	2	1	1
15	1	1	1	1	2	1	1
16	1	1	1	1	2	1	1
17	1	1	1	1	2	1	1
18	1	1	1	1	1	1	1
19	1	1	1	1	1	1	1
20	1	1	1	1	1	1	1
21	1	1	1	1	1	1	1
22	1	1	1	1	1	1	1
23	1	1	1	1	1	1	1

SUMMER SEASON MAY 21 THRU SEPTEMBER 15

HR/DAY	MON	TUES	WEDS	THUR	FRI	SAT	SUN
0	1	1	1	1	1	1	1
1	1	1	1	1	1	1	1
2	1	1	1	1	1	1	1
3	1	1	1	1	1	1	1
4	1	1	1	1	1	1	1
5	1	1	1	1	1	1	1
6	1	1	1	1	1	1	1
7	1	1	1	1	1	1	1
8	1	1	1	1	1	1	1
9	1	1	1	1	1	1	1
10	1	1	1	1	1	2	1
11	1	1	1	1	2	2	2
12	2	1	1	1	2	2	2
13	2	1	1	1	2	2	2
14	2	1	1	2	2	2	2
15	2	1	2	2	2	2	2
16	2	2	2	2	2	1	2
17	2	2	2	2	2	1	2
18	1	1	1	1	2	1	2
19	1	1	1	1	1	1	1
20	1	1	1	1	1	1	1
21	1	1	1	1	1	1	1
22	1	1	1	1	1	1	1
23	1	1	1	1	1	1	1

LANES REQUIRED TO BE OPEN BY HOUR AND TIME OF DAY

FALL SEASON SEPTEMBER 16 THRU November 30

HR/DAY	MON	TUES	WEDS	THUR	FRI	SAT	SUN
0	1	1	1	1	1	1	1
1	1	1	1	1	1	1	1
2	1	1	1	1	1	1	1
3	1	1	1	1	1	1	1
4	1	1	1	1	1	1	1
5	1	1	1	1	1	1	1
6	1	1	1	1	1	1	1
7	1	1	1	1	1	1	1
8	1	1	1	1	1	1	1
9	1	1	1	1	1	1	1
10	1	1	1	1	1	1	1
11	1	1	1	1	1	1	1
12	1	1	1	1	1	1	2
13	1	1	1	1	1	1	2
14	1	1	1	1	2	1	2
15	2	1	1	1	2	1	2
16	2	1	1	1	2	1	2
17	1	1	1	1	2	1	2
18	1	1	1	1	1	1	1
19	1	1	1	1	1	1	1
20	1	1	1	1	1	1	1
21	1	1	1	1	1	1	1
22	1	1	1	1	1	1	1
23	1	1	1	1	1	1	1

WINTER SEAS. DECEMBER 1 THRU February 28

HR/DAY	MON	TUES	WEDS	THUR	FRI	SAT	SUN
0	1	1	1	1	1	1	1
1	1	1	1	1	1	1	1
2	1	1	1	1	1	1	1
3	1	1	1	1	1	1	1
4	1	1	1	1	1	1	1
5	1	1	1	1	1	1	1
6	1	1	1	1	1	1	1
7	1	1	1	1	1	1	1
8	1	1	1	1	1	1	1
9	1	1	1	1	1	1	1
10	1	1	1	1	1	1	1
11	1	1	1	1	1	1	1
12	1	1	1	1	1	1	1
13	1	1	1	1	1	1	1
14	1	1	1	1	1	1	1
15	1	1	1	1	1	1	1
16	1	1	1	1	1	1	1
17	1	1	1	1	1	1	1
18	1	1	1	1	1	1	1
19	1	1	1	1	1	1	1
20	1	1	1	1	1	1	1
21	1	1	1	1	1	1	1
22	1	1	1	1	1	1	1
23	1	1	1	1	1	1	1

I-90 EASTBOUND INTERCHANGES 35 TO 34A (1,300 VEH/HR/LANE)

LANES REQUIRED TO BE OPEN BY HOUR AND TIME OF DAY

SPRING SEASON MARCH 1 THRU MAY 20

HR/DAY	MON	TUES	WEDS	THUR	FRI	SAT	SUN
0	1	1	1	1	1	1	1
1	1	1	1	1	1	1	1
2	1	1	1	1	1	1	1
3	1	1	1	1	1	1	1
4	1	1	1	1	1	1	1
5	1	1	1	1	1	1	1
6	1	1	1	1	1	1	1
7	1	1	1	1	1	1	1
8	1	1	1	1	1	1	1
9	1	1	1	1	1	1	1
10	1	1	1	1	1	1	1
11	1	1	1	1	1	1	1
12	1	1	1	1	1	1	1
13	1	1	1	1	1	1	1
14	1	1	1	1	2	1	1
15	1	1	1	1	2	1	1
16	1	1	1	2	2	1	1
17	1	1	1	2	2	1	1
18	1	1	1	1	1	1	1
19	1	1	1	1	1	1	1
20	1	1	1	1	1	1	1
21	1	1	1	1	1	1	1
22	1	1	1	1	1	1	1
23	1	1	1	1	1	1	1

SUMMER SEASON MAY 21 THRU SEPTEMBER 15

HR/DAY	MON	TUES	WEDS	THUR	FRI	SAT	SUN
0	1	1	1	1	1	1	1
1	1	1	1	1	1	1	1
2	1	1	1	1	1	1	1
3	1	1	1	1	1	1	1
4	1	1	1	1	1	1	1
5	1	1	1	1	1	1	1
6	1	1	1	1	1	1	1
7	1	1	1	1	1	1	1
8	1	1	1	1	1	1	1
9	1	1	1	1	1	1	1
10	1	1	1	1	2	2	2
11	1	1	1	1	2	2	2
12	1	1	1	1	2	2	2
13	1	1	1	1	2	2	2
14	1	1	1	2	2	1	2
15	2	2	2	2	2	1	2
16	2	2	2	2	2	1	2
17	2	2	2	2	2	1	2
18	1	1	1	1	2	1	1
19	1	1	1	1	1	1	1
20	1	1	1	1	1	1	1
21	1	1	1	1	1	1	1
22	1	1	1	1	1	1	1
23	1	1	1	1	1	1	1

LANES REQUIRED TO BE OPEN BY HOUR AND TIME OF DAY

FALL SEASON SEPTEMBER 16 THRU November 30

HR/DAY	MON	TUES	WEDS	THUR	FRI	SAT	SUN
0	1	1	1	1	1	1	1
1	1	1	1	1	1	1	1
2	1	1	1	1	1	1	1
3	1	1	1	1	1	1	1
4	1	1	1	1	1	1	1
5	1	1	1	1	1	1	1
6	1	1	1	1	1	1	1
7	1	1	1	1	1	1	1
8	1	1	1	1	1	1	1
9	1	1	1	1	1	1	1
10	1	1	1	1	1	1	1
11	1	1	1	1	2	1	2
12	1	1	1	1	2	1	2
13	1	1	1	1	2	1	2
14	1	1	1	1	2	1	2
15	1	1	2	2	2	1	2
16	1	2	2	2	2	1	2
17	1	2	1	2	2	1	1
18	1	1	1	1	1	1	1
19	1	1	1	1	1	1	1
20	1	1	1	1	1	1	1
21	1	1	1	1	1	1	1
22	1	1	1	1	1	1	1
23	1	1	1	1	1	1	1

WINTER SEAS. DECEMBER 1 THRU February 28

HR/DAY	MON	TUES	WEDS	THUR	FRI	SAT	SUN
0	1	1	1	1	1	1	1
1	1	1	1	1	1	1	1
2	1	1	1	1	1	1	1
3	1	1	1	1	1	1	1
4	1	1	1	1	1	1	1
5	1	1	1	1	1	1	1
6	1	1	1	1	1	1	1
7	1	1	1	1	1	1	1
8	1	1	1	1	1	1	1
9	1	1	1	1	1	1	1
10	1	1	1	1	1	1	1
11	1	1	1	1	1	1	1
12	1	1	1	1	1	1	1
13	1	1	1	1	1	1	1
14	1	1	1	1	1	1	1
15	1	1	1	1	1	1	1
16	1	1	1	1	2	1	1
17	1	1	1	1	2	1	1
18	1	1	1	1	1	1	1
19	1	1	1	1	1	1	1
20	1	1	1	1	1	1	1
21	1	1	1	1	1	1	1
22	1	1	1	1	1	1	1
23	1	1	1	1	1	1	1

NOTES:

1) THE NEW YORK STATE THRUWAY IS A LIMITED ACCESS, HIGH-SPEED, HIGH-VOLUME HIGHWAY. TRAFFIC SHALL BE MAINTAINED IN ACCORDANCE WITH THE *MANUAL ON UNIFORM TRAFFIC CONTROL DEVICES (MUTCD)*, THE *WORK ZONE TRAFFIC CONTROL PLANS*, AND THE *STANDARD SPECIFICATIONS* SECTION 619 AS AMENDED BY THE AUTHORITY.

2) LANE CLOSURES ON THE THRUWAY SHALL ONLY BE ALLOWED IN ACCORDANCE WITH THESE TRAFFIC MANAGEMENT TABLE(S), UNLESS INDICATED OTHERWISE IN THE CONTRACT PLANS OR PROPOSAL DOCUMENTS.

3) LANE CLOSURE CHARTS SHALL APPLY AS FOLLOWS:

- 1,150 VEH/HR/LANE: APPLIES TO ALL WORK REQUIRING LANE CLOSURE(S) EXCEPT AS PERMITTED BELOW.

- 1,300 VEH/HR/LANE: APPLIES TO NON-EVASIVE WORK WHERE WORKERS AND/OR EQUIPMENT ARE LOCATED 4 FT. OR MORE FROM TRAVEL (SPACE) LANE, OR AS APPROVED BY THE THRUWAY PROJECT ENGINEER. WORK SHOULD BE ABLE TO BE IMMEDIATELY STOPPED AND LANE CLOSURE(S) REMOVED IN THE EVENT QUEUES, GREATER THAN 1 MILE, DEVELOP.

NEW YORK STATE OF OPPORTUNITY. Thruway Authority

U.S. CUSTOMARY STANDARD SHEET

LANE CLOSURE CHARTS
1,300 VEHICLES PER HOUR
SYRACUSE DIVISION
(SHEET 8 OF 18)

APPROVED SEPTEMBER 1, 2018

/S/ PATRICK THOMPSON, P.E.
DIRECTOR DESIGN SUPPORT SERVICES BUREAU

ISSUED UNDER DB 18-003

TA 619-36

I-90: WESTBOUND INTERCHANGES 35 TO 36 (1,300 VEH/HR/LANE)

LANES REQUIRED TO BE OPEN BY HOUR AND TIME OF DAY

SPRING SEASON MARCH 1 THRU MAY 20

HR/DAY	MON	TUES	WEDS	THUR	FRI	SAT	SUN
0	1	1	1	1	1	1	1
1	1	1	1	1	1	1	1
2	1	1	1	1	1	1	1
3	1	1	1	1	1	1	1
4	1	1	1	1	1	1	1
5	1	1	1	1	1	1	1
6	1	1	1	1	1	1	1
7	1	1	1	1	1	1	1
8	1	1	1	1	1	1	1
9	1	1	1	1	1	1	1
10	1	1	1	1	1	1	1
11	1	1	1	1	1	1	1
12	1	1	1	1	1	1	1
13	1	1	1	1	1	1	1
14	1	1	1	1	2	1	1
15	2	2	2	2	2	1	1
16	2	2	2	2	2	1	1
17	2	2	2	2	2	1	1
18	1	1	1	1	1	1	1
19	1	1	1	1	1	1	1
20	1	1	1	1	1	1	1
21	1	1	1	1	1	1	1
22	1	1	1	1	1	1	1
23	1	1	1	1	1	1	1

SUMMER SEASON MAY 21 THRU SEPTEMBER 15

HR/DAY	MON	TUES	WEDS	THUR	FRI	SAT	SUN
0	1	1	1	1	1	1	1
1	1	1	1	1	1	1	1
2	1	1	1	1	1	1	1
3	1	1	1	1	1	1	1
4	1	1	1	1	1	1	1
5	1	1	1	1	1	1	1
6	1	1	1	1	1	1	1
7	1	1	1	1	1	1	1
8	1	1	1	1	1	1	1
9	1	1	1	1	1	1	1
10	1	1	1	1	2	2	1
11	2	1	1	1	2	2	2
12	2	1	1	2	2	2	2
13	2	1	1	2	2	2	2
14	2	2	2	2	2	2	2
15	2	2	2	2	2	2	2
16	2	2	2	2	2	1	2
17	2	2	2	2	2	1	2
18	1	1	1	1	2	1	2
19	1	1	1	1	1	1	1
20	1	1	1	1	1	1	1
21	1	1	1	1	1	1	1
22	1	1	1	1	1	1	1
23	1	1	1	1	1	1	1

LANES REQUIRED TO BE OPEN BY HOUR AND TIME OF DAY

FALL SEASON SEPTEMBER 16 THRU November 30

HR/DAY	MON	TUES	WEDS	THUR	FRI	SAT	SUN
0	1	1	1	1	1	1	1
1	1	1	1	1	1	1	1
2	1	1	1	1	1	1	1
3	1	1	1	1	1	1	1
4	1	1	1	1	1	1	1
5	1	1	1	1	1	1	1
6	1	1	1	1	1	1	1
7	1	1	1	1	1	1	1
8	1	1	1	1	1	1	1
9	1	1	1	1	1	1	1
10	1	1	1	1	1	1	1
11	1	1	1	1	1	1	1
12	1	1	1	1	1	1	2
13	1	1	1	1	2	1	2
14	2	1	2	1	2	1	2
15	2	2	2	2	2	1	2
16	2	2	2	2	2	1	2
17	2	2	2	2	2	1	2
18	1	1	1	1	2	1	1
19	1	1	1	1	1	1	1
20	1	1	1	1	1	1	1
21	1	1	1	1	1	1	1
22	1	1	1	1	1	1	1
23	1	1	1	1	1	1	1

WINTER SEAS. DECEMBER 1 THRU February 28

HR/DAY	MON	TUES	WEDS	THUR	FRI	SAT	SUN
0	1	1	1	1	1	1	1
1	1	1	1	1	1	1	1
2	1	1	1	1	1	1	1
3	1	1	1	1	1	1	1
4	1	1	1	1	1	1	1
5	1	1	1	1	1	1	1
6	1	1	1	1	1	1	1
7	1	1	1	1	1	1	1
8	1	1	1	1	1	1	1
9	1	1	1	1	1	1	1
10	1	1	1	1	1	1	1
11	1	1	1	1	1	1	1
12	1	1	1	1	1	1	1
13	1	1	1	1	1	1	1
14	1	1	1	1	2	1	1
15	1	1	2	2	2	1	1
16	2	2	2	2	2	1	1
17	2	2	2	2	2	1	1
18	1	1	1	1	1	1	1
19	1	1	1	1	1	1	1
20	1	1	1	1	1	1	1
21	1	1	1	1	1	1	1
22	1	1	1	1	1	1	1
23	1	1	1	1	1	1	1

I-90 EASTBOUND INTERCHANGES 36 TO 35 (1,300 VEH/HR/LANE)

LANES REQUIRED TO BE OPEN BY HOUR AND TIME OF DAY

SPRING SEASON MARCH 1 THRU MAY 20

HR/DAY	MON	TUES	WEDS	THUR	FRI	SAT	SUN
0	1	1	1	1	1	1	1
1	1	1	1	1	1	1	1
2	1	1	1	1	1	1	1
3	1	1	1	1	1	1	1
4	1	1	1	1	1	1	1
5	1	1	1	1	1	1	1
6	1	1	1	1	1	1	1
7	2	2	2	2	2	1	1
8	2	2	2	2	2	1	1
9	1	1	1	1	1	1	1
10	1	1	1	1	1	1	1
11	1	1	1	1	1	1	1
12	1	1	1	1	2	1	1
13	1	1	1	1	2	1	1
14	1	1	1	1	2	1	1
15	1	1	2	2	2	1	1
16	1	1	2	2	2	1	1
17	1	1	2	2	2	1	1
18	1	1	1	1	1	1	1
19	1	1	1	1	1	1	1
20	1	1	1	1	1	1	1
21	1	1	1	1	1	1	1
22	1	1	1	1	1	1	1
23	1	1	1	1	1	1	1

SUMMER SEASON MAY 21 THRU SEPTEMBER 15

HR/DAY	MON	TUES	WEDS	THUR	FRI	SAT	SUN
0	1	1	1	1	1	1	1
1	1	1	1	1	1	1	1
2	1	1	1	1	1	1	1
3	1	1	1	1	1	1	1
4	1	1	1	1	1	1	1
5	1	1	1	1	1	1	1
6	1	1	1	1	1	1	1
7	1	2	2	2	2	1	1
8	1	2	2	2	2	1	1
9	1	1	1	2	2	1	1
10	1	1	1	2	2	2	2
11	2	1	1	2	2	2	2
12	2	1	1	2	2	2	2
13	2	1	1	2	2	2	2
14	2	1	2	2	2	2	2
15	2	2	2	2	2	1	2
16	2	2	2	2	2	1	2
17	2	2	2	2	2	1	2
18	1	1	1	1	2	1	1
19	1	1	1	1	1	1	1
20	1	1	1	1	1	1	1
21	1	1	1	1	1	1	1
22	1	1	1	1	1	1	1
23	1	1	1	1	1	1	1

LANES REQUIRED TO BE OPEN BY HOUR AND TIME OF DAY

FALL SEASON SEPTEMBER 16 THRU November 30

HR/DAY	MON	TUES	WEDS	THUR	FRI	SAT	SUN
0	1	1	1	1	1	1	1
1	1	1	1	1	1	1	1
2	1	1	1	1	1	1	1
3	1	1	1	1	1	1	1
4	1	1	1	1	1	1	1
5	1	1	1	1	1	1	1
6	1	1	1	1	1	1	1
7	2	2	2	2	2	1	1
8	2	2	2	2	2	1	1
9	1	1	1	1	1	1	1
10	1	1	1	1	2	1	1
11	1	1	1	1	2	1	2
12	1	1	1	1	2	1	2
13	1	1	1	1	2	1	2
14	1	1	1	1	2	1	2
15	2	2	2	2	2	1	2
16	2	2	2	2	2	1	2
17	2	2	2	2	2	1	2
18	1	1	1	1	2	1	1
19	1	1	1	1	1	1	1
20	1	1	1	1	1	1	1
21	1	1	1	1	1	1	1
22	1	1	1	1	1	1	1
23	1	1	1	1	1	1	1

WINTER SEAS. DECEMBER 1 THRU February 28

HR/DAY	MON	TUES	WEDS	THUR	FRI	SAT	SUN
0	1	1	1	1	1	1	1
1	1	1	1	1	1	1	1
2	1	1	1	1	1	1	1
3	1	1	1	1	1	1	1
4	1	1	1	1	1	1	1
5	1	1	1	1	1	1	1
6	1	1	1	1	1	1	1
7	2	2	2	2	2	1	1
8	2	2	2	2	1	1	1
9	1	1	1	1	1	1	1
10	1	1	1	1	1	1	1
11	1	1	1	1	1	1	1
12	1	1	1	1	1	1	1
13	1	1	1	1	1	1	1
14	1	1	1	1	1	1	1
15	1	1	1	1	2	1	1
16	1	1	1	1	2	1	1
17	1	1	1	1	2	1	1
18	1	1	1	1	1	1	1
19	1	1	1	1	1	1	1
20	1	1	1	1	1	1	1
21	1	1	1	1	1	1	1
22	1	1	1	1	1	1	1
23	1	1	1	1	1	1	1

NOTES:

1) THE NEW YORK STATE THRUWAY IS A LIMITED ACCESS, HIGH-SPEED, HIGH-VOLUME HIGHWAY. TRAFFIC SHALL BE MAINTAINED IN ACCORDANCE WITH THE *MANUAL ON UNIFORM TRAFFIC CONTROL DEVICES (MUTCD)*, THE *WORK ZONE TRAFFIC CONTROL PLANS*, AND THE *STANDARD SPECIFICATIONS* SECTION 619 AS AMENDED BY THE AUTHORITY.

2) LANE CLOSURES ON THE THRUWAY SHALL ONLY BE ALLOWED IN ACCORDANCE WITH THESE TRAFFIC MANAGEMENT TABLE(S), UNLESS INDICATED OTHERWISE IN THE CONTRACT PLANS OR PROPOSAL DOCUMENTS.

3) LANE CLOSURE CHARTS SHALL APPLY AS FOLLOWS:

- 1,150 VEH/HR/LANE: APPLIES TO ALL WORK REQUIRING LANE CLOSURE(S) EXCEPT AS PERMITTED BELOW.

- 1,300 VEH/HR/LANE: APPLIES TO NON-EVASIVE WORK WHERE WORKERS AND/OR EQUIPMENT ARE LOCATED 4 FT. OR MORE FROM TRAVEL (SPACE) LANE, OR AS APPROVED BY THE THRUWAY PROJECT ENGINEER. WORK SHOULD BE ABLE TO BE IMMEDIATELY STOPPED AND LANE CLOSURE(S) REMOVED IN THE EVENT QUEUES, GREATER THAN 1 MILE, DEVELOP.

NEW YORK STATE OF OPPORTUNITY. Thruway Authority

U.S. CUSTOMARY STANDARD SHEET

LANE CLOSURE CHARTS
1,300 VEHICLES PER HOUR
SYRACUSE DIVISION
(SHEET 9 OF 18)

APPROVED SEPTEMBER 1, 2018

/S/ PATRICK THOMPSON, P.E.
DIRECTOR DESIGN SUPPORT SERVICES BUREAU

ISSUED UNDER DB 18-003

TA 619-36

I-90 WESTBOUND INTERCHANGES 36 TO 37 (1,300 VEH/HR/LANE)

LANES REQUIRED TO BE OPEN BY HOUR AND TIME OF DAY

SPRING SEASON MARCH 1 THRU MAY 20

HR/DAY	MON	TUES	WEDS	THUR	FRI	SAT	SUN
0	1	1	1	1	1	1	1
1	1	1	1	1	1	1	1
2	1	1	1	1	1	1	1
3	1	1	1	1	1	1	1
4	1	1	1	1	1	1	1
5	1	1	1	1	1	1	1
6	1	1	1	1	1	1	1
7	1	1	1	1	1	1	1
8	1	1	1	1	1	1	1
9	1	1	1	1	1	1	1
10	1	1	1	1	1	1	1
11	1	1	1	1	2	1	1
12	2	1	1	1	2	1	2
13	2	1	1	1	2	1	2
14	2	1	2	2	2	1	2
15	2	2	2	2	2	1	2
16	2	2	2	2	2	1	2
17	2	2	2	2	2	1	2
18	1	1	1	1	2	1	2
19	1	1	1	1	1	1	1
20	1	1	1	1	1	1	1
21	1	1	1	1	1	1	1
22	1	1	1	1	1	1	1
23	1	1	1	1	1	1	1

SUMMER SEASON MAY 21 THRU SEPTEMBER 15

HR/DAY	MON	TUES	WEDS	THUR	FRI	SAT	SUN
0	1	1	1	1	1	1	1
1	1	1	1	1	1	1	1
2	1	1	1	1	1	1	1
3	1	1	1	1	1	1	1
4	1	1	1	1	1	1	1
5	1	1	1	1	1	1	1
6	1	1	1	1	1	1	1
7	2	1	1	1	1	1	1
8	2	1	1	1	2	1	1
9	2	1	1	2	2	2	1
10	2	2	2	2	2	2	2
11	2	2	2	2	2	2	2
12	2	2	2	2	2	2	2
13	2	2	2	2	2	2	2
14	2	2	2	2	2	2	2
15	2	2	2	2	2	2	2
16	2	2	2	2	2	2	2
17	2	2	2	2	2	2	2
18	2	2	2	2	2	1	2
19	1	1	1	1	2	1	2
20	1	1	1	1	1	1	1
21	1	1	1	1	1	1	1
22	1	1	1	1	1	1	1
23	1	1	1	1	1	1	1

LANES REQUIRED TO BE OPEN BY HOUR AND TIME OF DAY

FALL SEASON SEPTEMBER 16 THRU November 30

HR/DAY	MON	TUES	WEDS	THUR	FRI	SAT	SUN
0	1	1	1	1	1	1	1
1	1	1	1	1	1	1	1
2	1	1	1	1	1	1	1
3	1	1	1	1	1	1	1
4	1	1	1	1	1	1	1
5	1	1	1	1	1	1	1
6	1	1	1	1	1	1	1
7	1	1	1	1	1	1	1
8	1	1	1	1	1	1	1
9	1	1	1	1	1	1	1
10	1	1	1	1	1	2	1
11	2	1	1	2	2	2	2
12	2	1	2	2	2	2	2
13	2	2	2	2	2	2	2
14	2	2	2	2	2	2	2
15	2	2	2	2	2	2	2
16	2	2	2	2	2	2	2
17	2	2	2	2	2	1	2
18	1	1	1	2	2	1	2
19	1	1	1	1	1	1	1
20	1	1	1	1	1	1	1
21	1	1	1	1	1	1	1
22	1	1	1	1	1	1	1
23	1	1	1	1	1	1	1

WINTER SEAS. DECEMBER 1 THRU February 28

HR/DAY	MON	TUES	WEDS	THUR	FRI	SAT	SUN
0	1	1	1	1	1	1	1
1	1	1	1	1	1	1	1
2	1	1	1	1	1	1	1
3	1	1	1	1	1	1	1
4	1	1	1	1	1	1	1
5	1	1	1	1	1	1	1
6	1	1	1	1	1	1	1
7	1	1	1	1	1	1	1
8	1	1	1	1	1	1	1
9	1	1	1	1	1	1	1
10	1	1	1	1	1	1	1
11	1	1	1	1	1	1	1
12	1	1	1	1	1	1	1
13	1	1	1	1	2	1	1
14	2	1	2	1	2	1	1
15	2	2	2	2	2	1	1
16	2	2	2	2	2	1	1
17	2	2	2	2	2	1	1
18	1	1	1	1	2	1	1
19	1	1	1	1	1	1	1
20	1	1	1	1	1	1	1
21	1	1	1	1	1	1	1
22	1	1	1	1	1	1	1
23	1	1	1	1	1	1	1

I-90 EASTBOUND INTERCHANGES 37 TO 36 (1,300 VEH/HR/LANE)

LANES REQUIRED TO BE OPEN BY HOUR AND TIME OF DAY

SPRING SEASON MARCH 1 THRU MAY 20

HR/DAY	MON	TUES	WEDS	THUR	FRI	SAT	SUN
0	1	1	1	1	1	1	1
1	1	1	1	1	1	1	1
2	1	1	1	1	1	1	1
3	1	1	1	1	1	1	1
4	1	1	1	1	1	1	1
5	1	1	1	1	1	1	1
6	1	1	1	1	1	1	1
7	2	2	2	2	2	1	1
8	2	2	2	2	2	1	1
9	2	1	1	1	2	1	1
10	2	1	1	1	2	1	1
11	2	1	1	1	2	1	1
12	2	1	1	1	2	1	2
13	2	1	1	1	2	1	2
14	2	1	1	2	2	1	2
15	2	2	2	2	2	1	2
16	2	2	2	2	2	1	2
17	2	2	2	2	2	1	2
18	1	1	1	1	2	1	1
19	1	1	1	1	1	1	1
20	1	1	1	1	1	1	1
21	1	1	1	1	1	1	1
22	1	1	1	1	1	1	1
23	1	1	1	1	1	1	1

SUMMER SEASON MAY 21 THRU SEPTEMBER 15

HR/DAY	MON	TUES	WEDS	THUR	FRI	SAT	SUN
0	1	1	1	1	1	1	1
1	1	1	1	1	1	1	1
2	1	1	1	1	1	1	1
3	1	1	1	1	1	1	1
4	1	1	1	1	1	1	1
5	1	1	1	1	1	1	1
6	2	1	1	1	1	1	1
7	2	2	2	2	2	1	1
8	2	2	2	2	2	1	1
9	2	2	2	2	2	2	1
10	2	2	2	2	2	2	2
11	2	2	2	2	2	2	2
12	2	2	2	2	2	2	2
13	2	2	2	2	2	2	2
14	2	2	2	2	2	2	2
15	2	2	2	2	2	2	2
16	2	2	2	2	2	2	2
17	2	2	2	2	2	2	2
18	1	1	1	2	2	1	2
19	1	1	1	1	2	1	1
20	1	1	1	1	1	1	1
21	1	1	1	1	1	1	1
22	1	1	1	1	1	1	1
23	1	1	1	1	1	1	1

LANES REQUIRED TO BE OPEN BY HOUR AND TIME OF DAY

FALL SEASON SEPTEMBER 16 THRU November 30

HR/DAY	MON	TUES	WEDS	THUR	FRI	SAT	SUN
0	1	1	1	1	1	1	1
1	1	1	1	1	1	1	1
2	1	1	1	1	1	1	1
3	1	1	1	1	1	1	1
4	1	1	1	1	1	1	1
5	1	1	1	1	1	1	1
6	1	1	1	2	1	1	1
7	2	2	2	2	2	1	1
8	2	2	2	2	2	1	1
9	2	1	2	2	2	1	1
10	2	1	2	2	2	2	2
11	2	1	2	2	2	2	2
12	2	1	2	2	2	2	2
13	2	1	2	2	2	2	2
14	2	2	2	2	2	2	2
15	2	2	2	2	2	1	2
16	2	2	2	2	2	1	2
17	2	2	2	2	2	1	2
18	1	1	1	1	2	1	2
19	1	1	1	1	1	1	1
20	1	1	1	1	1	1	1
21	1	1	1	1	1	1	1
22	1	1	1	1	1	1	1
23	1	1	1	1	1	1	1

WINTER SEAS. DECEMBER 1 THRU February 28

HR/DAY	MON	TUES	WEDS	THUR	FRI	SAT	SUN
0	1	1	1	1	1	1	1
1	1	1	1	1	1	1	1
2	1	1	1	1	1	1	1
3	1	1	1	1	1	1	1
4	1	1	1	1	1	1	1
5	1	1	1	1	1	1	1
6	1	1	1	1	1	1	1
7	2	2	2	2	2	1	1
8	2	2	2	2	2	1	1
9	1	1	1	1	2	1	1
10	1	1	1	1	2	1	1
11	1	1	1	1	2	1	1
12	1	1	1	1	2	1	1
13	1	1	1	1	2	1	1
14	1	1	1	1	2	1	1
15	2	2	2	2	2	1	1
16	2	2	2	2	2	1	1
17	2	2	2	2	2	1	1
18	1	1	1	1	1	1	1
19	1	1	1	1	1	1	1
20	1	1	1	1	1	1	1
21	1	1	1	1	1	1	1
22	1	1	1	1	1	1	1
23	1	1	1	1	1	1	1

NOTES:

1) THE NEW YORK STATE THRUWAY IS A LIMITED ACCESS, HIGH-SPEED, HIGH-VOLUME HIGHWAY. TRAFFIC SHALL BE MAINTAINED IN ACCORDANCE WITH THE *MANUAL ON UNIFORM TRAFFIC CONTROL DEVICES (MUTCD)*, THE *WORK ZONE TRAFFIC CONTROL PLANS*, AND THE *STANDARD SPECIFICATIONS* SECTION 619 AS AMENDED BY THE AUTHORITY.

2) LANE CLOSURES ON THE THRUWAY SHALL ONLY BE ALLOWED IN ACCORDANCE WITH THESE TRAFFIC MANAGEMENT TABLE(S), UNLESS INDICATED OTHERWISE IN THE CONTRACT PLANS OR PROPOSAL DOCUMENTS.

3) LANE CLOSURE CHARTS SHALL APPLY AS FOLLOWS:

- 1,150 VEH/HR/LANE: APPLIES TO ALL WORK REQUIRING LANE CLOSURE(S) EXCEPT AS PERMITTED BELOW.

- 1,300 VEH/HR/LANE: APPLIES TO NON-EVASIVE WORK WHERE WORKERS AND/OR EQUIPMENT ARE LOCATED 4 FT. OR MORE FROM TRAVEL (SPACE) LANE, OR AS APPROVED BY THE THRUWAY PROJECT ENGINEER. WORK SHOULD BE ABLE TO BE IMMEDIATELY STOPPED AND LANE CLOSURE(S) REMOVED IN THE EVENT QUEUES, GREATER THAN 1 MILE, DEVELOP.

NEW YORK STATE OF OPPORTUNITY. Thruway Authority

U.S. CUSTOMARY STANDARD SHEET

LANE CLOSURE CHARTS
1,300 VEHICLES PER HOUR
SYRACUSE DIVISION
(SHEET 10 OF 18)

APPROVED SEPTEMBER 1, 2018

/S/ PATRICK THOMPSON, P.E.
DIRECTOR DESIGN SUPPORT SERVICES BUREAU

ISSUED UNDER DB 18-003

TA 619-36

I-90 WESTBOUND INTERCHANGES 37 TO 38 (1,300 VEH/HR/LANE)

LANES REQUIRED TO BE OPEN BY HOUR AND TIME OF DAY

SPRING SEASON MARCH 1 THRU MAY 20

HR/DAY	MON	TUES	WEDS	THUR	FRI	SAT	SUN
0	1	1	1	1	1	1	1
1	1	1	1	1	1	1	1
2	1	1	1	1	1	1	1
3	1	1	1	1	1	1	1
4	1	1	1	1	1	1	1
5	1	1	1	1	1	1	1
6	1	1	1	1	1	1	1
7	1	1	1	1	1	1	1
8	1	1	1	1	1	1	1
9	1	1	1	1	1	1	1
10	1	1	1	1	1	1	1
11	1	1	1	1	2	1	1
12	2	1	1	1	2	1	2
13	2	1	1	1	2	1	2
14	2	1	2	2	2	1	2
15	2	2	2	2	2	1	2
16	2	2	2	2	2	1	2
17	2	2	2	2	2	1	2
18	1	1	1	1	2	1	2
19	1	1	1	1	1	1	1
20	1	1	1	1	1	1	1
21	1	1	1	1	1	1	1
22	1	1	1	1	1	1	1
23	1	1	1	1	1	1	1

SUMMER SEASON MAY 21 THRU SEPTEMBER 15

HR/DAY	MON	TUES	WEDS	THUR	FRI	SAT	SUN
0	1	1	1	1	1	1	1
1	1	1	1	1	1	1	1
2	1	1	1	1	1	1	1
3	1	1	1	1	1	1	1
4	1	1	1	1	1	1	1
5	1	1	1	1	1	1	1
6	1	1	1	1	1	1	1
7	1	1	1	1	1	1	1
8	1	1	1	1	1	1	1
9	1	1	1	1	2	2	1
10	2	1	2	2	2	2	2
11	2	2	2	2	2	2	2
12	2	2	2	2	2	2	2
13	2	2	2	2	2	2	2
14	2	2	2	2	2	2	2
15	2	2	2	2	2	2	2
16	2	2	2	2	2	2	2
17	2	2	2	2	2	2	2
18	2	1	2	2	2	1	2
19	1	1	1	1	2	1	2
20	1	1	1	1	1	1	1
21	1	1	1	1	1	1	1
22	1	1	1	1	1	1	1
23	1	1	1	1	1	1	1

LANES REQUIRED TO BE OPEN BY HOUR AND TIME OF DAY

FALL SEASON SEPTEMBER 16 THRU November 30

HR/DAY	MON	TUES	WEDS	THUR	FRI	SAT	SUN
0	1	1	1	1	1	1	1
1	1	1	1	1	1	1	1
2	1	1	1	1	1	1	1
3	1	1	1	1	1	1	1
4	1	1	1	1	1	1	1
5	1	1	1	1	1	1	1
6	1	1	1	1	1	1	1
7	1	1	1	1	1	1	1
8	1	1	1	1	1	1	1
9	1	1	1	1	1	1	1
10	1	1	1	1	1	2	1
11	2	1	1	2	2	2	2
12	2	1	2	1	2	2	2
13	2	1	2	1	2	2	2
14	2	2	2	2	2	2	2
15	2	2	2	2	2	2	2
16	2	2	2	2	2	2	2
17	2	2	2	2	2	1	2
18	2	1	1	2	2	1	2
19	1	1	1	1	1	1	1
20	1	1	1	1	1	1	1
21	1	1	1	1	1	1	1
22	1	1	1	1	1	1	1
23	1	1	1	1	1	1	1

WINTER SEAS. DECEMBER 1 THRU February 28

HR/DAY	MON	TUES	WEDS	THUR	FRI	SAT	SUN
0	1	1	1	1	1	1	1
1	1	1	1	1	1	1	1
2	1	1	1	1	1	1	1
3	1	1	1	1	1	1	1
4	1	1	1	1	1	1	1
5	1	1	1	1	1	1	1
6	1	1	1	1	1	1	1
7	1	1	1	1	1	1	1
8	1	1	1	1	1	1	1
9	1	1	1	1	1	1	1
10	1	1	1	1	1	1	1
11	1	1	1	1	1	1	1
12	1	1	1	1	1	1	1
13	1	1	1	1	2	1	1
14	2	1	2	1	2	1	1
15	2	2	2	2	2	1	1
16	2	2	2	2	2	1	1
17	2	2	2	2	2	1	1
18	1	1	1	1	1	1	1
19	1	1	1	1	1	1	1
20	1	1	1	1	1	1	1
21	1	1	1	1	1	1	1
22	1	1	1	1	1	1	1
23	1	1	1	1	1	1	1

I-90 EASTBOUND INTERCHANGES 38 TO 37 (1,300 VEH/HR/LANE)

LANES REQUIRED TO BE OPEN BY HOUR AND TIME OF DAY

SPRING SEASON MARCH 1 THRU MAY 20

HR/DAY	MON	TUES	WEDS	THUR	FRI	SAT	SUN
0	1	1	1	1	1	1	1
1	1	1	1	1	1	1	1
2	1	1	1	1	1	1	1
3	1	1	1	1	1	1	1
4	1	1	1	1	1	1	1
5	1	1	1	1	1	1	1
6	1	1	1	1	1	1	1
7	2	2	2	2	2	1	1
8	2	2	2	2	2	1	1
9	1	1	1	1	2	1	1
10	1	1	1	1	2	1	1
11	1	1	1	1	2	1	1
12	1	1	1	1	2	1	2
13	2	1	1	1	2	1	2
14	2	1	1	2	2	1	2
15	2	1	2	2	2	1	2
16	2	1	2	2	2	1	2
17	2	1	2	2	2	1	2
18	1	1	1	1	2	1	2
19	1	1	1	1	1	1	1
20	1	1	1	1	1	1	1
21	1	1	1	1	1	1	1
22	1	1	1	1	1	1	1
23	1	1	1	1	1	1	1

SUMMER SEASON MAY 21 THRU SEPTEMBER 15

HR/DAY	MON	TUES	WEDS	THUR	FRI	SAT	SUN
0	1	1	1	1	1	1	1
1	1	1	1	1	1	1	1
2	1	1	1	1	1	1	1
3	1	1	1	1	1	1	1
4	1	1	1	1	1	1	1
5	1	1	1	1	1	1	1
6	2	1	1	1	1	1	1
7	2	2	2	2	2	1	1
8	2	2	2	2	2	1	1
9	2	2	2	2	2	2	1
10	2	2	2	2	2	2	2
11	2	2	2	2	2	2	2
12	2	2	2	2	2	2	2
13	2	2	2	2	2	2	2
14	2	2	2	2	2	2	2
15	2	2	2	2	2	2	2
16	2	2	2	2	2	2	2
17	2	2	2	2	2	2	2
18	1	1	1	2	2	1	2
19	1	1	1	1	2	1	2
20	1	1	1	1	1	1	1
21	1	1	1	1	1	1	1
22	1	1	1	1	1	1	1
23	1	1	1	1	1	1	1

LANES REQUIRED TO BE OPEN BY HOUR AND TIME OF DAY

FALL SEASON SEPTEMBER 16 THRU November 30

HR/DAY	MON	TUES	WEDS	THUR	FRI	SAT	SUN
0	1	1	1	1	1	1	1
1	1	1	1	1	1	1	1
2	1	1	1	1	1	1	1
3	1	1	1	1	1	1	1
4	1	1	1	1	1	1	1
5	1	1	1	1	1	1	1
6	1	1	1	2	1	1	1
7	2	2	2	2	2	1	1
8	2	2	2	2	2	1	1
9	2	1	2	2	2	1	1
10	2	1	2	2	2	2	2
11	2	1	2	2	2	2	2
12	2	1	2	2	2	2	2
13	2	1	2	2	2	1	2
14	2	2	2	2	2	1	2
15	2	2	2	2	2	1	2
16	2	2	2	2	2	1	2
17	2	2	2	2	2	1	2
18	1	1	1	1	2	1	2
19	1	1	1	1	1	1	1
20	1	1	1	1	1	1	1
21	1	1	1	1	1	1	1
22	1	1	1	1	1	1	1
23	1	1	1	1	1	1	1

WINTER SEAS. DECEMBER 1 THRU February 28

HR/DAY	MON	TUES	WEDS	THUR	FRI	SAT	SUN
0	1	1	1	1	1	1	1
1	1	1	1	1	1	1	1
2	1	1	1	1	1	1	1
3	1	1	1	1	1	1	1
4	1	1	1	1	1	1	1
5	1	1	1	1	1	1	1
6	1	1	1	1	1	1	1
7	2	2	2	2	2	1	1
8	2	2	2	2	2	1	1
9	1	1	1	1	1	1	1
10	1	1	1	1	1	1	1
11	1	1	1	1	1	1	1
12	1	1	1	1	1	1	2
13	1	1	1	1	2	1	2
14	1	1	1	1	2	1	1
15	1	1	1	1	2	1	1
16	1	1	1	1	2	1	1
17	1	1	1	1	2	1	1
18	1	1	1	1	1	1	1
19	1	1	1	1	1	1	1
20	1	1	1	1	1	1	1
21	1	1	1	1	1	1	1
22	1	1	1	1	1	1	1
23	1	1	1	1	1	1	1

NOTES:

1) THE NEW YORK STATE THRUWAY IS A LIMITED ACCESS, HIGH-SPEED, HIGH-VOLUME HIGHWAY. TRAFFIC SHALL BE MAINTAINED IN ACCORDANCE WITH THE *MANUAL ON UNIFORM TRAFFIC CONTROL DEVICES (MUTCD)*, THE *WORK ZONE TRAFFIC CONTROL PLANS*, AND THE *STANDARD SPECIFICATIONS* SECTION 619 AS AMENDED BY THE AUTHORITY.

2) LANE CLOSURES ON THE THRUWAY SHALL ONLY BE ALLOWED IN ACCORDANCE WITH THESE TRAFFIC MANAGEMENT TABLE(S), UNLESS INDICATED OTHERWISE IN THE CONTRACT PLANS OR PROPOSAL DOCUMENTS.

3) LANE CLOSURE CHARTS SHALL APPLY AS FOLLOWS:

- 1,150 VEH/HR/LANE: APPLIES TO ALL WORK REQUIRING LANE CLOSURE(S) EXCEPT AS PERMITTED BELOW.

- 1,300 VEH/HR/LANE: APPLIES TO NON-EVASIVE WORK WHERE WORKERS AND/OR EQUIPMENT ARE LOCATED 4 FT. OR MORE FROM TRAVEL (SPACE) LANE, OR AS APPROVED BY THE THRUWAY PROJECT ENGINEER. WORK SHOULD BE ABLE TO BE IMMEDIATELY STOPPED AND LANE CLOSURE(S) REMOVED IN THE EVENT QUEUES, GREATER THAN 1 MILE, DEVELOP.

NEW YORK STATE OF OPPORTUNITY. Thruway Authority

U.S. CUSTOMARY STANDARD SHEET

LANE CLOSURE CHARTS
1,300 VEHICLES PER HOUR
SYRACUSE DIVISION
(SHEET 11 OF 18)

APPROVED SEPTEMBER 1, 2018

/S/ PATRICK THOMPSON, P.E.
DIRECTOR DESIGN SUPPORT SERVICES BUREAU

ISSUED UNDER DB 18-003

TA 619-36

I-90 WESTBOUND INTERCHANGES 38 TO 39 (1,300 VEH/HR/LANE)

LANES REQUIRED TO BE OPEN BY HOUR AND TIME OF DAY

SPRING SEASON MARCH 1 THRU MAY 20

HR/DAY	MON	TUES	WEDS	THUR	FRI	SAT	SUN
0	1	1	1	1	1	1	1
1	1	1	1	1	1	1	1
2	1	1	1	1	1	1	1
3	1	1	1	1	1	1	1
4	1	1	1	1	1	1	1
5	1	1	1	1	1	1	1
6	1	1	1	1	1	1	1
7	1	1	1	1	1	1	1
8	1	1	1	1	1	1	1
9	1	1	1	1	1	1	1
10	1	1	1	1	1	1	1
11	1	1	1	1	2	1	1
12	2	1	1	1	2	1	1
13	2	1	1	1	2	1	2
14	2	1	1	2	2	1	2
15	2	2	2	2	2	1	2
16	2	2	2	2	2	1	2
17	2	2	2	2	2	1	2
18	1	1	1	1	1	1	2
19	1	1	1	1	1	1	1
20	1	1	1	1	1	1	1
21	1	1	1	1	1	1	1
22	1	1	1	1	1	1	1
23	1	1	1	1	1	1	1

SUMMER SEASON MAY 21 THRU SEPTEMBER 15

HR/DAY	MON	TUES	WEDS	THUR	FRI	SAT	SUN
0	1	1	1	1	1	1	1
1	1	1	1	1	1	1	1
2	1	1	1	1	1	1	1
3	1	1	1	1	1	1	1
4	1	1	1	1	1	1	1
5	1	1	1	1	1	1	1
6	1	1	1	1	1	1	1
7	1	1	1	1	1	1	1
8	1	1	1	1	1	1	1
9	1	1	1	1	2	2	1
10	2	1	1	2	2	2	2
11	2	2	2	2	2	2	2
12	2	2	2	2	2	2	2
13	2	2	2	2	2	2	2
14	2	2	2	2	2	2	2
15	2	2	2	2	2	2	2
16	2	2	2	2	2	2	2
17	2	2	2	2	2	2	2
18	1	1	1	2	2	1	2
19	1	1	1	1	1	1	2
20	1	1	1	1	1	1	1
21	1	1	1	1	1	1	1
22	1	1	1	1	1	1	1
23	1	1	1	1	1	1	1

LANES REQUIRED TO BE OPEN BY HOUR AND TIME OF DAY

FALL SEASON SEPTEMBER 16 THRU November 30

HR/DAY	MON	TUES	WEDS	THUR	FRI	SAT	SUN
0	1	1	1	1	1	1	1
1	1	1	1	1	1	1	1
2	1	1	1	1	1	1	1
3	1	1	1	1	1	1	1
4	1	1	1	1	1	1	1
5	1	1	1	1	1	1	1
6	1	1	1	1	1	1	1
7	1	1	1	1	1	1	1
8	1	1	1	1	1	1	1
9	1	1	1	1	1	1	1
10	1	1	1	1	1	2	1
11	1	1	1	1	2	2	2
12	2	1	1	1	2	2	2
13	2	1	2	1	2	2	2
14	2	2	2	2	2	2	2
15	2	2	2	2	2	1	2
16	2	2	2	2	2	1	2
17	2	2	2	2	2	1	2
18	1	1	1	1	2	1	2
19	1	1	1	1	1	1	1
20	1	1	1	1	1	1	1
21	1	1	1	1	1	1	1
22	1	1	1	1	1	1	1
23	1	1	1	1	1	1	1

WINTER SEAS. DECEMBER 1 THRU February 28

HR/DAY	MON	TUES	WEDS	THUR	FRI	SAT	SUN
0	1	1	1	1	1	1	1
1	1	1	1	1	1	1	1
2	1	1	1	1	1	1	1
3	1	1	1	1	1	1	1
4	1	1	1	1	1	1	1
5	1	1	1	1	1	1	1
6	1	1	1	1	1	1	1
7	1	1	1	1	1	1	1
8	1	1	1	1	1	1	1
9	1	1	1	1	1	1	1
10	1	1	1	1	1	1	1
11	1	1	1	1	1	1	1
12	1	1	1	1	1	1	1
13	1	1	1	1	1	1	1
14	1	1	1	1	2	1	1
15	2	1	2	2	2	1	1
16	2	2	2	2	2	1	1
17	2	2	2	2	2	1	1
18	1	1	1	1	1	1	1
19	1	1	1	1	1	1	1
20	1	1	1	1	1	1	1
21	1	1	1	1	1	1	1
22	1	1	1	1	1	1	1
23	1	1	1	1	1	1	1

I-90 EASTBOUND INTERCHANGES 39 TO 38 (1,300 VEH/HR/LANE)

LANES REQUIRED TO BE OPEN BY HOUR AND TIME OF DAY

SPRING SEASON MARCH 1 THRU MAY 20

HR/DAY	MON	TUES	WEDS	THUR	FRI	SAT	SUN
0	1	1	1	1	1	1	1
1	1	1	1	1	1	1	1
2	1	1	1	1	1	1	1
3	1	1	1	1	1	1	1
4	1	1	1	1	1	1	1
5	1	1	1	1	1	1	1
6	1	1	1	1	1	1	1
7	2	2	2	2	2	1	1
8	1	1	1	1	1	1	1
9	1	1	1	1	1	1	1
10	1	1	1	1	2	1	1
11	1	1	1	1	2	1	1
12	1	1	1	1	2	1	1
13	1	1	1	1	2	1	1
14	1	1	1	1	2	1	2
15	1	1	1	2	2	1	2
16	1	1	1	2	2	1	2
17	1	1	1	2	2	1	2
18	1	1	1	1	2	1	1
19	1	1	1	1	1	1	1
20	1	1	1	1	1	1	1
21	1	1	1	1	1	1	1
22	1	1	1	1	1	1	1
23	1	1	1	1	1	1	1

SUMMER SEASON MAY 21 THRU SEPTEMBER 15

HR/DAY	MON	TUES	WEDS	THUR	FRI	SAT	SUN
0	1	1	1	1	1	1	1
1	1	1	1	1	1	1	1
2	1	1	1	1	1	1	1
3	1	1	1	1	1	1	1
4	1	1	1	1	1	1	1
5	1	1	1	1	1	1	1
6	1	1	1	1	1	1	1
7	2	2	2	2	2	1	1
8	2	2	2	2	2	1	1
9	2	2	2	2	2	2	1
10	2	2	2	2	2	2	2
11	2	2	2	2	2	2	2
12	2	2	2	2	2	2	2
13	2	2	2	2	2	2	2
14	2	2	2	2	2	2	2
15	2	2	2	2	2	2	2
16	2	2	2	2	2	2	2
17	2	2	2	2	2	2	2
18	1	1	1	2	2	2	2
19	1	1	1	1	2	1	2
20	1	1	1	1	1	1	1
21	1	1	1	1	1	1	1
22	1	1	1	1	1	1	1
23	1	1	1	1	1	1	1

LANES REQUIRED TO BE OPEN BY HOUR AND TIME OF DAY

FALL SEASON SEPTEMBER 16 THRU November 30

HR/DAY	MON	TUES	WEDS	THUR	FRI	SAT	SUN
0	1	1	1	1	1	1	1
1	1	1	1	1	1	1	1
2	1	1	1	1	1	1	1
3	1	1	1	1	1	1	1
4	1	1	1	1	1	1	1
5	1	1	1	1	1	1	1
6	1	1	1	1	1	1	1
7	2	2	2	2	2	1	1
8	2	2	2	2	2	1	1
9	2	1	2	2	2	1	1
10	2	1	2	2	2	2	2
11	2	1	2	2	2	2	2
12	2	1	1	2	2	2	2
13	2	1	2	2	2	2	2
14	2	2	2	2	2	2	2
15	2	2	2	2	2	2	2
16	2	2	2	2	2	2	2
17	2	2	2	2	2	2	2
18	1	1	1	1	2	1	2
19	1	1	1	1	1	1	1
20	1	1	1	1	1	1	1
21	1	1	1	1	1	1	1
22	1	1	1	1	1	1	1
23	1	1	1	1	1	1	1

WINTER SEAS. DECEMBER 1 THRU February 28

HR/DAY	MON	TUES	WEDS	THUR	FRI	SAT	SUN
0	1	1	1	1	1	1	1
1	1	1	1	1	1	1	1
2	1	1	1	1	1	1	1
3	1	1	1	1	1	1	1
4	1	1	1	1	1	1	1
5	1	1	1	1	1	1	1
6	1	1	1	1	1	1	1
7	2	2	2	2	2	1	1
8	1	1	1	1	1	1	1
9	1	1	1	1	1	1	1
10	1	1	1	1	1	1	1
11	1	1	1	1	1	1	1
12	1	1	1	1	1	1	1
13	1	1	1	1	1	1	1
14	1	1	1	1	2	1	1
15	1	1	1	1	2	1	1
16	1	1	1	1	2	1	1
17	1	1	1	1	2	1	1
18	1	1	1	1	1	1	1
19	1	1	1	1	1	1	1
20	1	1	1	1	1	1	1
21	1	1	1	1	1	1	1
22	1	1	1	1	1	1	1
23	1	1	1	1	1	1	1

NOTES:

1) THE NEW YORK STATE THRUWAY IS A LIMITED ACCESS, HIGH-SPEED, HIGH-VOLUME HIGHWAY. TRAFFIC SHALL BE MAINTAINED IN ACCORDANCE WITH THE *MANUAL ON UNIFORM TRAFFIC CONTROL DEVICES (MUTCD)*, THE *WORK ZONE TRAFFIC CONTROL PLANS*, AND THE *STANDARD SPECIFICATIONS* SECTION 619 AS AMENDED BY THE AUTHORITY.

2) LANE CLOSURES ON THE THRUWAY SHALL ONLY BE ALLOWED IN ACCORDANCE WITH THESE TRAFFIC MANAGEMENT TABLE(S), UNLESS INDICATED OTHERWISE IN THE CONTRACT PLANS OR PROPOSAL DOCUMENTS.

3) LANE CLOSURE CHARTS SHALL APPLY AS FOLLOWS:

- 1,150 VEH/HR/LANE: APPLIES TO ALL WORK REQUIRING LANE CLOSURE(S) EXCEPT AS PERMITTED BELOW.

- 1,300 VEH/HR/LANE: APPLIES TO NON-EVASIVE WORK WHERE WORKERS AND/OR EQUIPMENT ARE LOCATED 4 FT. OR MORE FROM TRAVEL (SPACE) LANE, OR AS APPROVED BY THE THRUWAY PROJECT ENGINEER. WORK SHOULD BE ABLE TO BE IMMEDIATELY STOPPED AND LANE CLOSURE(S) REMOVED IN THE EVENT QUEUES, GREATER THAN 1 MILE, DEVELOP.

NEW YORK STATE OF OPPORTUNITY. Thruway Authority

U.S. CUSTOMARY STANDARD SHEET

LANE CLOSURE CHARTS
1,300 VEHICLES PER HOUR
SYRACUSE DIVISION
(SHEET 12 OF 18)

APPROVED SEPTEMBER 1, 2018

/S/ PATRICK THOMPSON, P.E.
DIRECTOR DESIGN SUPPORT SERVICES BUREAU

ISSUED UNDER DB 18-003

TA 619-36

I-90 WESTBOUND INTERCHANGES 39 TO 40 (1,300 VEH/HR/LANE)

LANES REQUIRED TO BE OPEN BY HOUR AND TIME OF DAY

SPRING SEASON MARCH 1 THRU MAY 20

HR/DAY	MON	TUES	WEDS	THUR	FRI	SAT	SUN
0	1	1	1	1	1	1	1
1	1	1	1	1	1	1	1
2	1	1	1	1	1	1	1
3	1	1	1	1	1	1	1
4	1	1	1	1	1	1	1
5	1	1	1	1	1	1	1
6	1	1	1	1	1	1	1
7	1	1	1	1	1	1	1
8	1	1	1	1	1	1	1
9	1	1	1	1	1	2	1
10	1	1	1	1	2	2	1
11	2	1	1	1	2	2	2
12	2	1	1	1	2	2	2
13	2	1	1	2	2	2	2
14	2	1	2	2	2	2	2
15	2	2	2	2	2	2	2
16	2	2	2	2	2	1	2
17	2	1	2	2	2	1	2
18	1	1	1	1	2	1	2
19	1	1	1	1	1	1	2
20	1	1	1	1	1	1	1
21	1	1	1	1	1	1	1
22	1	1	1	1	1	1	1
23	1	1	1	1	1	1	1

SUMMER SEASON MAY 21 THRU SEPTEMBER 15

HR/DAY	MON	TUES	WEDS	THUR	FRI	SAT	SUN
0	1	1	1	1	1	1	1
1	1	1	1	1	1	1	1
2	1	1	1	1	1	1	1
3	1	1	1	1	1	1	1
4	1	1	1	1	1	1	1
5	1	1	1	1	1	1	1
6	1	1	1	1	1	1	1
7	1	1	1	1	1	1	1
8	1	2	2	2	2	1	1
9	2	2	2	2	2	2	2
10	2	2	2	2	2	2	2
11	2	2	2	2	2	2	2
12	2	2	2	2	2	2	2
13	2	2	2	2	2	2	2
14	2	2	2	2	2	2	2
15	2	2	2	2	2	2	2
16	2	2	2	2	2	2	2
17	2	2	2	2	2	2	2
18	2	1	2	2	2	2	2
19	1	1	1	2	2	2	2
20	1	1	1	1	1	1	2
21	1	1	1	1	1	1	1
22	1	1	1	1	1	1	1
23	1	1	1	1	1	1	1

LANES REQUIRED TO BE OPEN BY HOUR AND TIME OF DAY

FALL SEASON SEPTEMBER 16 THRU November 30

HR/DAY	MON	TUES	WEDS	THUR	FRI	SAT	SUN
0	1	1	1	1	1	1	1
1	1	1	1	1	1	1	1
2	1	1	1	1	1	1	1
3	1	1	1	1	1	1	1
4	1	1	1	1	1	1	1
5	1	1	1	1	1	1	1
6	1	1	1	1	1	1	1
7	1	1	1	1	1	1	1
8	1	1	1	1	1	2	1
9	1	1	1	1	2	2	1
10	2	1	2	2	2	2	2
11	2	1	2	2	2	2	2
12	2	1	2	2	2	2	2
13	2	2	2	2	2	2	2
14	2	2	2	2	2	2	2
15	2	2	2	2	2	2	2
16	2	2	2	2	2	2	2
17	2	2	2	2	2	2	2
18	1	1	1	2	2	1	2
19	1	1	1	1	1	1	2
20	1	1	1	1	1	1	1
21	1	1	1	1	1	1	1
22	1	1	1	1	1	1	1
23	1	1	1	1	1	1	1

WINTER SEAS. DECEMBER 1 THRU February 28

HR/DAY	MON	TUES	WEDS	THUR	FRI	SAT	SUN
0	1	1	1	1	1	1	1
1	1	1	1	1	1	1	1
2	1	1	1	1	1	1	1
3	1	1	1	1	1	1	1
4	1	1	1	1	1	1	1
5	1	1	1	1	1	1	1
6	1	1	1	1	1	1	1
7	1	1	1	1	1	1	1
8	1	1	1	1	1	1	1
9	1	1	1	1	1	1	1
10	1	1	1	1	1	1	1
11	1	1	1	1	2	2	1
12	1	1	1	1	2	2	2
13	2	1	2	1	2	2	2
14	2	2	2	2	2	2	2
15	2	2	2	2	2	2	2
16	2	2	2	2	2	1	2
17	1	1	1	2	2	1	2
18	1	1	1	1	1	1	1
19	1	1	1	1	1	1	1
20	1	1	1	1	1	1	1
21	1	1	1	1	1	1	1
22	1	1	1	1	1	1	1
23	1	1	1	1	1	1	1

I-90 EASTBOUND INTERCHANGES 40 TO 39 (1,300 VEH/HR/LANE)

LANES REQUIRED TO BE OPEN BY HOUR AND TIME OF DAY

SPRING SEASON MARCH 1 THRU MAY 20

HR/DAY	MON	TUES	WEDS	THUR	FRI	SAT	SUN
0	1	1	1	1	1	1	1
1	1	1	1	1	1	1	1
2	1	1	1	1	1	1	1
3	1	1	1	1	1	1	1
4	1	1	1	1	1	1	1
5	1	1	1	1	1	1	1
6	1	1	1	1	1	1	1
7	1	1	1	1	1	1	1
8	1	1	1	1	1	1	1
9	1	1	1	1	2	1	1
10	2	1	1	1	2	2	1
11	2	1	1	1	2	2	2
12	2	1	1	1	2	2	2
13	2	1	1	2	2	2	2
14	2	1	1	2	2	2	2
15	2	1	2	2	2	2	2
16	2	1	2	2	2	2	2
17	2	1	2	2	2	2	2
18	1	1	1	1	2	1	2
19	1	1	1	1	1	1	2
20	1	1	1	1	1	1	1
21	1	1	1	1	1	1	1
22	1	1	1	1	1	1	1
23	1	1	1	1	1	1	1

SUMMER SEASON MAY 21 THRU SEPTEMBER 15

HR/DAY	MON	TUES	WEDS	THUR	FRI	SAT	SUN
0	1	1	1	1	1	1	1
1	1	1	1	1	1	1	1
2	1	1	1	1	1	1	1
3	1	1	1	1	1	1	1
4	1	1	1	1	1	1	1
5	1	1	1	1	1	1	1
6	1	1	1	1	1	1	1
7	2	1	1	1	1	1	1
8	2	1	2	2	2	1	1
9	2	2	2	2	2	2	2
10	2	2	2	2	2	2	2
11	2	2	2	2	2	2	2
12	2	2	2	2	2	2	2
13	2	2	2	2	2	2	2
14	2	2	2	2	2	2	2
15	2	2	2	2	2	2	2
16	2	2	2	2	2	2	2
17	2	2	2	2	2	2	2
18	2	1	2	2	2	2	2
19	1	1	1	1	2	1	2
20	1	1	1	1	1	1	2
21	1	1	1	1	1	1	1
22	1	1	1	1	1	1	1
23	1	1	1	1	1	1	1

LANES REQUIRED TO BE OPEN BY HOUR AND TIME OF DAY

FALL SEASON SEPTEMBER 16 THRU November 30

HR/DAY	MON	TUES	WEDS	THUR	FRI	SAT	SUN
0	1	1	1	1	1	1	1
1	1	1	1	1	1	1	1
2	1	1	1	1	1	1	1
3	1	1	1	1	1	1	1
4	1	1	1	1	1	1	1
5	1	1	1	1	1	1	1
6	1	1	1	1	1	1	1
7	1	1	1	1	1	1	1
8	1	1	1	1	2	1	1
9	1	1	2	2	2	1	1
10	2	1	2	2	2	2	2
11	2	2	2	2	2	2	2
12	2	2	2	2	2	2	2
13	2	2	2	1	2	2	2
14	2	2	2	2	2	2	2
15	2	2	2	2	2	2	2
16	2	2	2	2	2	2	2
17	2	2	2	2	2	2	2
18	1	2	1	1	2	1	2
19	1	1	1	1	2	1	2
20	1	1	1	1	1	1	2
21	1	1	1	1	1	1	1
22	1	1	1	1	1	1	1
23	1	1	1	1	1	1	1

WINTER SEAS. DECEMBER 1 THRU February 28

HR/DAY	MON	TUES	WEDS	THUR	FRI	SAT	SUN
0	1	1	1	1	1	1	1
1	1	1	1	1	1	1	1
2	1	1	1	1	1	1	1
3	1	1	1	1	1	1	1
4	1	1	1	1	1	1	1
5	1	1	1	1	1	1	1
6	1	1	1	1	1	1	1
7	1	1	1	1	1	1	1
8	1	1	1	1	1	1	1
9	1	1	1	1	1	1	1
10	1	1	1	1	2	2	1
11	2	1	2	1	2	2	2
12	2	1	2	1	2	2	2
13	2	1	2	1	2	2	2
14	2	1	2	2	2	2	2
15	2	1	2	2	2	1	2
16	2	1	2	2	2	1	2
17	1	1	1	2	2	1	1
18	1	1	1	1	2	1	1
19	1	1	1	1	1	1	1
20	1	1	1	1	1	1	1
21	1	1	1	1	1	1	1
22	1	1	1	1	1	1	1
23	1	1	1	1	1	1	1

NOTES:

1) THE NEW YORK STATE THRUWAY IS A LIMITED ACCESS, HIGH-SPEED, HIGH-VOLUME HIGHWAY. TRAFFIC SHALL BE MAINTAINED IN ACCORDANCE WITH THE *MANUAL ON UNIFORM TRAFFIC CONTROL DEVICES (MUTCD)*, THE *WORK ZONE TRAFFIC CONTROL PLANS*, AND THE *STANDARD SPECIFICATIONS* SECTION 619 AS AMENDED BY THE AUTHORITY.

2) LANE CLOSURES ON THE THRUWAY SHALL ONLY BE ALLOWED IN ACCORDANCE WITH THESE TRAFFIC MANAGEMENT TABLE(S), UNLESS INDICATED OTHERWISE IN THE CONTRACT PLANS OR PROPOSAL DOCUMENTS.

3) LANE CLOSURE CHARTS SHALL APPLY AS FOLLOWS:

- 1,150 VEH/HR/LANE: APPLIES TO ALL WORK REQUIRING LANE CLOSURE(S) EXCEPT AS PERMITTED BELOW.

- 1,300 VEH/HR/LANE: APPLIES TO NON-EVASIVE WORK WHERE WORKERS AND/OR EQUIPMENT ARE LOCATED 4 FT. OR MORE FROM TRAVEL (SPACE) LANE, OR AS APPROVED BY THE THRUWAY PROJECT ENGINEER. WORK SHOULD BE ABLE TO BE IMMEDIATELY STOPPED AND LANE CLOSURE(S) REMOVED IN THE EVENT QUEUES, GREATER THAN 1 MILE, DEVELOP.

NEW YORK STATE OF OPPORTUNITY. Thruway Authority

U.S. CUSTOMARY STANDARD SHEET

LANE CLOSURE CHARTS
1,300 VEHICLES PER HOUR
SYRACUSE DIVISION
(SHEET 13 OF 18)

APPROVED SEPTEMBER 1, 2018

/S/ PATRICK THOMPSON, P.E.
DIRECTOR DESIGN SUPPORT SERVICES BUREAU

ISSUED UNDER DB 18-003

TA 619-36

I-90 WESTBOUND INTERCHANGES 40 TO 41 (1,300 VEH/HR/LANE)

LANES REQUIRED TO BE OPEN BY HOUR AND TIME OF DAY

SPRING SEASON MARCH 1 THRU MAY 20

HR/DAY	MON	TUES	WEDS	THUR	FRI	SAT	SUN
0	1	1	1	1	1	1	1
1	1	1	1	1	1	1	1
2	1	1	1	1	1	1	1
3	1	1	1	1	1	1	1
4	1	1	1	1	1	1	1
5	1	1	1	1	1	1	1
6	1	1	1	1	1	1	1
7	1	1	1	1	1	1	1
8	1	1	1	1	1	1	1
9	1	1	1	1	1	1	1
10	1	1	1	1	2	2	1
11	1	1	1	1	2	2	2
12	2	1	1	1	2	2	2
13	2	1	1	1	2	2	2
14	2	1	1	2	2	2	2
15	2	1	1	2	2	1	2
16	2	1	1	2	2	1	2
17	2	1	1	2	2	1	2
18	1	1	1	1	2	1	2
19	1	1	1	1	1	1	2
20	1	1	1	1	1	1	1
21	1	1	1	1	1	1	1
22	1	1	1	1	1	1	1
23	1	1	1	1	1	1	1

SUMMER SEASON MAY 21 THRU SEPTEMBER 15

HR/DAY	MON	TUES	WEDS	THUR	FRI	SAT	SUN
0	1	1	1	1	1	1	1
1	1	1	1	1	1	1	1
2	1	1	1	1	1	1	1
3	1	1	1	1	1	1	1
4	1	1	1	1	1	1	1
5	1	1	1	1	1	1	1
6	1	1	1	1	1	1	1
7	1	1	1	1	1	1	1
8	1	1	1	1	1	1	1
9	1	1	1	1	2	2	1
10	2	2	2	2	2	2	2
11	2	2	2	2	2	2	2
12	2	2	2	2	2	2	2
13	2	2	2	2	2	2	2
14	2	2	2	2	2	2	2
15	2	2	2	2	2	2	2
16	2	2	2	2	2	2	2
17	2	2	2	2	2	2	2
18	2	1	1	2	2	2	2
19	1	1	1	1	2	1	2
20	1	1	1	1	1	1	2
21	1	1	1	1	1	1	1
22	1	1	1	1	1	1	1
23	1	1	1	1	1	1	1

LANES REQUIRED TO BE OPEN BY HOUR AND TIME OF DAY

FALL SEASON SEPTEMBER 16 THRU November 30

HR/DAY	MON	TUES	WEDS	THUR	FRI	SAT	SUN
0	1	1	1	1	1	1	1
1	1	1	1	1	1	1	1
2	1	1	1	1	1	1	1
3	1	1	1	1	1	1	1
4	1	1	1	1	1	1	1
5	1	1	1	1	1	1	1
6	1	1	1	1	1	1	1
7	1	1	1	1	1	1	1
8	1	1	1	1	1	1	1
9	1	1	1	1	1	1	1
10	1	1	1	1	1	2	1
11	1	1	1	2	2	2	2
12	2	1	1	2	2	2	2
13	2	1	2	2	2	2	2
14	2	2	2	2	2	2	2
15	2	2	2	2	2	2	2
16	2	2	2	2	2	2	2
17	2	2	2	2	2	2	2
18	1	1	1	1	2	1	2
19	1	1	1	1	1	1	2
20	1	1	1	1	1	1	2
21	1	1	1	1	1	1	1
22	1	1	1	1	1	1	1
23	1	1	1	1	1	1	1

WINTER SEAS. DECEMBER 1 THRU February 28

HR/DAY	MON	TUES	WEDS	THUR	FRI	SAT	SUN
0	1	1	1	1	1	1	1
1	1	1	1	1	1	1	1
2	1	1	1	1	1	1	1
3	1	1	1	1	1	1	1
4	1	1	1	1	1	1	1
5	1	1	1	1	1	1	1
6	1	1	1	1	1	1	1
7	1	1	1	1	1	1	1
8	1	1	1	1	1	1	1
9	1	1	1	1	1	1	1
10	1	1	1	1	1	1	1
11	1	1	1	1	1	1	1
12	1	1	1	1	1	1	1
13	1	1	1	1	2	1	2
14	2	1	1	1	2	1	2
15	2	1	1	1	2	1	2
16	2	1	1	1	2	1	2
17	1	1	1	1	2	1	2
18	1	1	1	1	1	1	1
19	1	1	1	1	1	1	1
20	1	1	1	1	1	1	1
21	1	1	1	1	1	1	1
22	1	1	1	1	1	1	1
23	1	1	1	1	1	1	1

I-90 EASTBOUND INTERCHANGES 41 TO 40 (1,300 VEH/HR/LANE)

LANES REQUIRED TO BE OPEN BY HOUR AND TIME OF DAY

SPRING SEASON MARCH 1 THRU MAY 20

HR/DAY	MON	TUES	WEDS	THUR	FRI	SAT	SUN
0	1	1	1	1	1	1	1
1	1	1	1	1	1	1	1
2	1	1	1	1	1	1	1
3	1	1	1	1	1	1	1
4	1	1	1	1	1	1	1
5	1	1	1	1	1	1	1
6	1	1	1	1	1	1	1
7	1	1	1	1	1	1	1
8	1	1	1	1	1	1	1
9	1	1	1	1	2	1	1
10	1	1	1	1	2	2	1
11	2	1	1	1	2	2	2
12	2	1	1	1	2	2	2
13	2	1	1	1	2	2	2
14	2	1	1	2	2	2	2
15	2	1	1	2	2	2	2
16	2	1	1	2	2	2	2
17	1	1	1	2	2	1	2
18	1	1	1	1	2	1	2
19	1	1	1	1	1	1	1
20	1	1	1	1	1	1	1
21	1	1	1	1	1	1	1
22	1	1	1	1	1	1	1
23	1	1	1	1	1	1	1

SUMMER SEASON MAY 21 THRU SEPTEMBER 15

HR/DAY	MON	TUES	WEDS	THUR	FRI	SAT	SUN
0	1	1	1	1	1	1	1
1	1	1	1	1	1	1	1
2	1	1	1	1	1	1	1
3	1	1	1	1	1	1	1
4	1	1	1	1	1	1	1
5	1	1	1	1	1	1	1
6	1	1	1	1	1	1	1
7	1	1	1	1	1	1	1
8	1	1	1	2	2	2	1
9	2	1	2	2	2	2	2
10	2	2	2	2	2	2	2
11	2	2	2	2	2	2	2
12	2	2	2	2	2	2	2
13	2	2	2	2	2	2	2
14	2	2	2	2	2	2	2
15	2	2	2	2	2	2	2
16	2	2	2	2	2	2	2
17	2	2	2	2	2	2	2
18	1	1	1	2	2	2	2
19	1	1	1	1	2	1	2
20	1	1	1	1	1	1	2
21	1	1	1	1	1	1	1
22	1	1	1	1	1	1	1
23	1	1	1	1	1	1	1

LANES REQUIRED TO BE OPEN BY HOUR AND TIME OF DAY

FALL SEASON SEPTEMBER 16 THRU November 30

HR/DAY	MON	TUES	WEDS	THUR	FRI	SAT	SUN
0	1	1	1	1	1	1	1
1	1	1	1	1	1	1	1
2	1	1	1	1	1	1	1
3	1	1	1	1	1	1	1
4	1	1	1	1	1	1	1
5	1	1	1	1	1	1	1
6	1	1	1	1	1	1	1
7	1	1	1	1	1	1	1
8	1	1	1	1	1	1	1
9	1	1	1	1	2	2	1
10	2	1	2	2	2	2	2
11	2	1	2	2	2	2	2
12	2	2	2	2	2	2	2
13	2	2	2	2	2	2	2
14	2	2	2	2	2	2	2
15	2	2	2	2	2	2	2
16	2	2	2	2	2	2	2
17	2	2	2	2	2	2	2
18	1	2	1	1	2	1	2
19	1	1	1	1	1	1	2
20	1	1	1	1	1	1	1
21	1	1	1	1	1	1	1
22	1	1	1	1	1	1	1
23	1	1	1	1	1	1	1

WINTER SEAS. DECEMBER 1 THRU February 28

HR/DAY	MON	TUES	WEDS	THUR	FRI	SAT	SUN
0	1	1	1	1	1	1	1
1	1	1	1	1	1	1	1
2	1	1	1	1	1	1	1
3	1	1	1	1	1	1	1
4	1	1	1	1	1	1	1
5	1	1	1	1	1	1	1
6	1	1	1	1	1	1	1
7	1	1	1	1	1	1	1
8	1	1	1	1	1	1	1
9	1	1	1	1	1	1	1
10	1	1	1	1	1	2	1
11	2	1	1	1	2	2	2
12	2	1	1	1	2	2	2
13	2	1	1	1	2	2	2
14	2	1	1	1	2	1	2
15	2	1	1	1	2	1	2
16	2	1	1	2	2	1	2
17	1	1	1	1	2	1	1
18	1	1	1	1	1	1	1
19	1	1	1	1	1	1	1
20	1	1	1	1	1	1	1
21	1	1	1	1	1	1	1
22	1	1	1	1	1	1	1
23	1	1	1	1	1	1	1

NOTES:

1) THE NEW YORK STATE THRUWAY IS A LIMITED ACCESS, HIGH-SPEED, HIGH-VOLUME HIGHWAY. TRAFFIC SHALL BE MAINTAINED IN ACCORDANCE WITH THE *MANUAL ON UNIFORM TRAFFIC CONTROL DEVICES (MUTCD)*, THE *WORK ZONE TRAFFIC CONTROL PLANS*, AND THE *STANDARD SPECIFICATIONS* SECTION 619 AS AMENDED BY THE AUTHORITY.

2) LANE CLOSURES ON THE THRUWAY SHALL ONLY BE ALLOWED IN ACCORDANCE WITH THESE TRAFFIC MANAGEMENT TABLE(S), UNLESS INDICATED OTHERWISE IN THE CONTRACT PLANS OR PROPOSAL DOCUMENTS.

3) LANE CLOSURE CHARTS SHALL APPLY AS FOLLOWS:

- 1,150 VEH/HR/LANE: APPLIES TO ALL WORK REQUIRING LANE CLOSURE(S) EXCEPT AS PERMITTED BELOW.

- 1,300 VEH/HR/LANE: APPLIES TO NON-EVASIVE WORK WHERE WORKERS AND/OR EQUIPMENT ARE LOCATED 4 FT. OR MORE FROM TRAVEL (SPACE) LANE, OR AS APPROVED BY THE THRUWAY PROJECT ENGINEER. WORK SHOULD BE ABLE TO BE IMMEDIATELY STOPPED AND LANE CLOSURE(S) REMOVED IN THE EVENT QUEUES, GREATER THAN 1 MILE, DEVELOP.

NEW YORK STATE OF OPPORTUNITY. Thruway Authority

U.S. CUSTOMARY STANDARD SHEET

LANE CLOSURE CHARTS
1,300 VEHICLES PER HOUR
SYRACUSE DIVISION
(SHEET 14 OF 18)

APPROVED SEPTEMBER 1, 2018

/S/ PATRICK THOMPSON, P.E.
DIRECTOR DESIGN SUPPORT SERVICES BUREAU

ISSUED UNDER DB 18-003

TA 619-36

I-90 WESTBOUND INTERCHANGES 41 TO 42 (1,300 VEH/HR/LANE)

LANES REQUIRED TO BE OPEN BY HOUR AND TIME OF DAY

SPRING SEASON MARCH 1 THRU MAY 20

HR/DAY	MON	TUES	WEDS	THUR	FRI	SAT	SUN
0	1	1	1	1	1	1	1
1	1	1	1	1	1	1	1
2	1	1	1	1	1	1	1
3	1	1	1	1	1	1	1
4	1	1	1	1	1	1	1
5	1	1	1	1	1	1	1
6	1	1	1	1	1	1	1
7	1	1	1	1	1	1	1
8	1	1	1	1	1	1	1
9	1	1	1	1	1	1	1
10	1	1	1	1	2	2	1
11	2	1	1	1	2	2	2
12	2	1	1	1	2	2	2
13	2	1	1	1	2	2	2
14	2	1	1	2	2	2	2
15	2	1	2	2	2	2	2
16	2	1	2	2	2	1	2
17	2	1	2	2	2	1	2
18	2	1	1	1	2	1	2
19	1	1	1	1	1	1	2
20	1	1	1	1	1	1	2
21	1	1	1	1	1	1	1
22	1	1	1	1	1	1	1
23	1	1	1	1	1	1	1

SUMMER SEASON MAY 21 THRU SEPTEMBER 15

HR/DAY	MON	TUES	WEDS	THUR	FRI	SAT	SUN
0	1	1	1	1	1	1	1
1	1	1	1	1	1	1	1
2	1	1	1	1	1	1	1
3	1	1	1	1	1	1	1
4	1	1	1	1	1	1	1
5	1	1	1	1	1	1	1
6	1	1	1	1	1	1	1
7	1	1	1	1	1	1	1
8	1	1	1	1	1	1	1
9	1	1	1	2	2	2	1
10	2	2	2	2	2	2	2
11	2	2	2	2	2	2	2
12	2	2	2	2	2	2	2
13	2	2	2	2	2	2	2
14	2	2	2	2	2	2	2
15	2	2	2	2	2	2	2
16	2	2	2	2	2	2	2
17	2	2	2	2	2	2	2
18	2	1	2	2	2	2	2
19	2	1	1	1	2	2	2
20	1	1	1	1	1	1	2
21	1	1	1	1	1	1	1
22	1	1	1	1	1	1	1
23	1	1	1	1	1	1	1

LANES REQUIRED TO BE OPEN BY HOUR AND TIME OF DAY

FALL SEASON SEPTEMBER 16 THRU November 30

HR/DAY	MON	TUES	WEDS	THUR	FRI	SAT	SUN
0	1	1	1	1	1	1	1
1	1	1	1	1	1	1	1
2	1	1	1	1	1	1	1
3	1	1	1	1	1	1	1
4	1	1	1	1	1	1	1
5	1	1	1	1	1	1	1
6	1	1	1	1	1	1	1
7	1	2	2	1	1	1	1
8	1	2	1	1	1	1	1
9	1	2	2	1	1	1	1
10	1	2	2	2	1	2	1
11	1	2	2	2	2	2	2
12	2	2	2	2	2	2	2
13	2	2	2	2	2	2	2
14	2	2	2	2	2	2	2
15	2	2	2	2	2	2	2
16	2	2	2	2	2	2	2
17	2	2	2	2	2	2	2
18	1	1	1	1	2	1	2
19	1	1	1	1	2	1	2
20	1	1	1	1	1	1	2
21	1	1	1	1	1	1	1
22	1	1	1	1	1	1	1
23	1	1	1	1	1	1	1

WINTER SEAS. DECEMBER 1 THRU February 28

HR/DAY	MON	TUES	WEDS	THUR	FRI	SAT	SUN
0	1	1	1	1	1	1	1
1	1	1	1	1	1	1	1
2	1	1	1	1	1	1	1
3	1	1	1	1	1	1	1
4	1	1	1	1	1	1	1
5	1	1	1	1	1	1	1
6	1	1	1	1	1	1	1
7	1	1	1	1	1	1	1
8	1	1	1	1	1	1	1
9	1	1	1	1	1	1	1
10	1	1	1	1	1	1	1
11	1	1	1	1	1	1	1
12	1	1	1	1	1	1	1
13	1	1	1	1	2	2	2
14	2	1	1	1	2	2	2
15	2	1	1	1	2	2	2
16	2	1	1	1	2	1	2
17	1	1	1	1	2	1	2
18	1	1	1	1	2	1	1
19	1	1	1	1	1	1	1
20	1	1	1	1	1	1	1
21	1	1	1	1	1	1	1
22	1	1	1	1	1	1	1
23	1	1	1	1	1	1	1

I-90 EASTBOUND INTERCHANGES 42 TO 41 (1,300 VEH/HR/LANE)

LANES REQUIRED TO BE OPEN BY HOUR AND TIME OF DAY

SPRING SEASON MARCH 1 THRU MAY 20

HR/DAY	MON	TUES	WEDS	THUR	FRI	SAT	SUN
0	1	1	1	1	1	1	1
1	1	1	1	1	1	1	1
2	1	1	1	1	1	1	1
3	1	1	1	1	1	1	1
4	1	1	1	1	1	1	1
5	1	1	1	1	1	1	1
6	1	1	1	1	1	1	1
7	1	1	1	1	1	1	1
8	1	1	1	1	1	1	1
9	1	1	1	1	2	2	1
10	2	1	1	1	2	2	2
11	2	1	1	1	2	2	2
12	2	1	1	1	2	2	2
13	2	1	1	1	2	2	2
14	2	1	1	2	2	2	2
15	2	1	1	2	2	2	2
16	2	1	1	2	2	2	2
17	1	1	1	2	2	1	2
18	1	1	1	1	2	1	2
19	1	1	1	1	1	1	1
20	1	1	1	1	1	1	1
21	1	1	1	1	1	1	1
22	1	1	1	1	1	1	1
23	1	1	1	1	1	1	1

SUMMER SEASON MAY 21 THRU SEPTEMBER 15

HR/DAY	MON	TUES	WEDS	THUR	FRI	SAT	SUN
0	1	1	1	1	1	1	1
1	1	1	1	1	1	1	1
2	1	1	1	1	1	1	1
3	1	1	1	1	1	1	1
4	1	1	1	1	1	1	1
5	1	1	1	1	1	1	1
6	1	1	1	1	1	1	1
7	1	1	1	1	1	1	1
8	2	1	1	2	2	2	1
9	2	2	2	2	2	2	2
10	2	2	2	2	2	2	2
11	2	2	2	2	2	2	2
12	2	2	2	2	2	2	2
13	2	2	2	2	2	2	2
14	2	2	2	2	2	2	2
15	2	2	2	2	2	2	2
16	2	2	2	2	2	2	2
17	2	2	2	2	2	2	2
18	1	1	1	2	2	1	2
19	1	1	1	1	2	1	2
20	1	1	1	1	1	1	1
21	1	1	1	1	1	1	1
22	1	1	1	1	1	1	1
23	1	1	1	1	1	1	1

LANES REQUIRED TO BE OPEN BY HOUR AND TIME OF DAY

FALL SEASON SEPTEMBER 16 THRU November 30

HR/DAY	MON	TUES	WEDS	THUR	FRI	SAT	SUN
0	1	1	1	1	1	1	1
1	1	1	1	1	1	1	1
2	1	1	1	1	1	1	1
3	1	1	1	1	1	1	1
4	1	1	1	1	1	1	1
5	1	1	1	1	1	1	1
6	1	1	1	1	1	1	1
7	1	1	1	1	1	1	1
8	1	1	1	1	1	1	1
9	2	1	1	1	2	2	1
10	2	1	2	2	2	2	2
11	2	1	2	2	2	2	2
12	2	2	2	2	2	2	2
13	2	2	2	2	2	2	2
14	2	2	2	2	2	2	2
15	2	2	2	2	2	2	2
16	2	2	2	2	2	2	2
17	2	2	2	2	2	1	2
18	1	1	1	1	2	1	2
19	1	1	1	1	1	1	2
20	1	1	1	1	1	1	1
21	1	1	1	1	1	1	1
22	1	1	1	1	1	1	1
23	1	1	1	1	1	1	1

WINTER SEAS. DECEMBER 1 THRU February 28

HR/DAY	MON	TUES	WEDS	THUR	FRI	SAT	SUN
0	1	1	1	1	1	1	1
1	1	1	1	1	1	1	1
2	1	1	1	1	1	1	1
3	1	1	1	1	1	1	1
4	1	1	1	1	1	1	1
5	1	1	1	1	1	1	1
6	1	1	1	1	1	1	1
7	1	1	1	1	1	1	1
8	1	1	1	1	1	1	1
9	1	1	1	1	1	1	1
10	1	1	1	1	2	2	1
11	2	1	1	1	2	2	2
12	2	1	1	1	2	2	2
13	2	1	1	1	2	2	2
14	2	1	1	1	2	1	2
15	2	1	1	1	2	1	2
16	1	1	1	1	2	1	2
17	1	1	1	1	2	1	1
18	1	1	1	1	1	1	1
19	1	1	1	1	1	1	1
20	1	1	1	1	1	1	1
21	1	1	1	1	1	1	1
22	1	1	1	1	1	1	1
23	1	1	1	1	1	1	1

NOTES:

1) THE NEW YORK STATE THRUWAY IS A LIMITED ACCESS, HIGH-SPEED, HIGH-VOLUME HIGHWAY. TRAFFIC SHALL BE MAINTAINED IN ACCORDANCE WITH THE *MANUAL ON UNIFORM TRAFFIC CONTROL DEVICES (MUTCD)*, THE *WORK ZONE TRAFFIC CONTROL PLANS*, AND THE *STANDARD SPECIFICATIONS* SECTION 619 AS AMENDED BY THE AUTHORITY.

2) LANE CLOSURES ON THE THRUWAY SHALL ONLY BE ALLOWED IN ACCORDANCE WITH THESE TRAFFIC MANAGEMENT TABLE(S), UNLESS INDICATED OTHERWISE IN THE CONTRACT PLANS OR PROPOSAL DOCUMENTS.

3) LANE CLOSURE CHARTS SHALL APPLY AS FOLLOWS:

- 1,150 VEH/HR/LANE: APPLIES TO ALL WORK REQUIRING LANE CLOSURE(S) EXCEPT AS PERMITTED BELOW.

- 1,300 VEH/HR/LANE: APPLIES TO NON-EVASIVE WORK WHERE WORKERS AND/OR EQUIPMENT ARE LOCATED 4 FT. OR MORE FROM TRAVEL (SPACE) LANE, OR AS APPROVED BY THE THRUWAY PROJECT ENGINEER. WORK SHOULD BE ABLE TO BE IMMEDIATELY STOPPED AND LANE CLOSURE(S) REMOVED IN THE EVENT QUEUES, GREATER THAN 1 MILE, DEVELOP.

NEW YORK STATE OF OPPORTUNITY. Thruway Authority

U.S. CUSTOMARY STANDARD SHEET

LANE CLOSURE CHARTS
1,300 VEHICLES PER HOUR
SYRACUSE DIVISION
(SHEET 15 OF 18)

APPROVED SEPTEMBER 1, 2018

/S/ PATRICK THOMPSON, P.E.
DIRECTOR DESIGN SUPPORT SERVICES BUREAU

ISSUED UNDER DB 18-003

TA 619-36

I-90 WESTBOUND INTERCHANGES 42 TO 43 (1,300 VEH/HR/LANE)

LANES REQUIRED TO BE OPEN BY HOUR AND TIME OF DAY

SPRING SEASON MARCH 1 THRU MAY 20

HR/DAY	MON	TUES	WEDS	THUR	FRI	SAT	SUN
0	1	1	1	1	1	1	1
1	1	1	1	1	1	1	1
2	1	1	1	1	1	1	1
3	1	1	1	1	1	1	1
4	1	1	1	1	1	1	1
5	1	1	1	1	1	1	1
6	1	1	1	1	1	1	1
7	1	1	1	1	1	1	1
8	1	1	1	1	1	1	1
9	1	1	1	1	1	1	1
10	1	1	1	1	2	2	1
11	2	1	1	1	2	2	2
12	2	1	1	1	2	2	2
13	2	1	1	1	2	2	2
14	2	1	2	2	2	2	2
15	2	2	2	2	2	2	2
16	2	2	2	2	2	2	2
17	2	2	2	2	2	2	2
18	2	1	1	2	2	1	2
19	1	1	1	1	2	1	2
20	1	1	1	1	1	1	2
21	1	1	1	1	1	1	1
22	1	1	1	1	1	1	1
23	1	1	1	1	1	1	1

SUMMER SEASON MAY 21 THRU SEPTEMBER 15

HR/DAY	MON	TUES	WEDS	THUR	FRI	SAT	SUN
0	1	1	1	1	1	1	1
1	1	1	1	1	1	1	1
2	1	1	1	1	1	1	1
3	1	1	1	1	1	1	1
4	1	1	1	1	1	1	1
5	1	1	1	1	1	1	1
6	1	1	1	1	1	1	1
7	1	1	1	1	1	1	1
8	1	1	1	1	1	1	1
9	2	1	1	2	2	2	1
10	2	2	2	2	2	2	2
11	2	2	2	2	2	2	2
12	2	2	2	2	2	2	2
13	2	2	2	2	2	2	2
14	2	2	2	2	2	2	2
15	2	2	2	2	2	2	2
16	2	2	2	2	2	2	2
17	2	2	2	2	2	2	2
18	2	2	2	2	2	2	2
19	2	1	1	2	2	2	2
20	1	1	1	1	2	2	2
21	1	1	1	1	1	1	2
22	1	1	1	1	1	1	1
23	1	1	1	1	1	1	1

LANES REQUIRED TO BE OPEN BY HOUR AND TIME OF DAY

FALL SEASON SEPTEMBER 16 THRU November 30

HR/DAY	MON	TUES	WEDS	THUR	FRI	SAT	SUN
0	1	1	1	1	1	1	1
1	1	1	1	1	1	1	1
2	1	1	1	1	1	1	1
3	1	1	1	1	1	1	1
4	1	1	1	1	1	1	1
5	1	1	1	1	1	1	1
6	1	1	1	1	1	1	1
7	1	1	1	1	1	1	1
8	1	1	1	1	1	1	1
9	1	1	1	1	1	1	1
10	1	1	1	1	2	2	2
11	2	1	2	2	2	2	2
12	2	1	2	2	2	2	2
13	2	2	2	2	2	2	2
14	2	2	2	2	2	2	2
15	2	2	2	2	2	2	2
16	2	2	2	2	2	2	2
17	2	2	2	2	2	2	2
18	2	1	2	1	2	2	2
19	1	1	1	1	2	1	2
20	1	1	1	1	1	1	2
21	1	1	1	1	1	1	1
22	1	1	1	1	1	1	1
23	1	1	1	1	1	1	1

WINTER SEAS. DECEMBER 1 THRU February 28

HR/DAY	MON	TUES	WEDS	THUR	FRI	SAT	SUN
0	1	1	1	1	1	1	1
1	1	1	1	1	1	1	1
2	1	1	1	1	1	1	1
3	1	1	1	1	1	1	1
4	1	1	1	1	1	1	1
5	1	1	1	1	1	1	1
6	1	1	1	1	1	1	1
7	1	1	1	1	1	1	1
8	1	1	1	1	1	1	1
9	1	1	1	1	1	1	1
10	1	1	1	1	1	1	1
11	1	1	1	1	2	2	1
12	1	1	1	1	2	2	2
13	2	1	2	1	2	2	2
14	2	2	2	2	2	2	2
15	2	2	2	2	2	2	2
16	2	2	2	2	2	2	2
17	2	2	2	2	2	2	2
18	1	1	1	1	2	1	1
19	1	1	1	1	1	1	1
20	1	1	1	1	1	1	1
21	1	1	1	1	1	1	1
22	1	1	1	1	1	1	1
23	1	1	1	1	1	1	1

I-90 EASTBOUND INTERCHANGES 43 TO 42 (1,300 VEH/HR/LANE)

LANES REQUIRED TO BE OPEN BY HOUR AND TIME OF DAY

SPRING SEASON MARCH 1 THRU MAY 20

HR/DAY	MON	TUES	WEDS	THUR	FRI	SAT	SUN
0	1	1	1	1	1	1	1
1	1	1	1	1	1	1	1
2	1	1	1	1	1	1	1
3	1	1	1	1	1	1	1
4	1	1	1	1	1	1	1
5	1	1	1	1	1	1	1
6	1	1	1	1	1	1	1
7	2	1	1	2	1	1	1
8	1	1	1	2	2	1	1
9	2	1	1	2	2	2	1
10	2	1	1	2	2	2	2
11	2	1	1	2	2	2	2
12	2	1	1	2	2	2	2
13	2	1	2	2	2	2	2
14	2	2	2	2	2	2	2
15	2	2	2	2	2	2	2
16	2	2	2	2	2	2	2
17	2	2	2	2	2	2	2
18	1	1	1	2	2	1	2
19	1	1	1	1	1	1	1
20	1	1	1	1	1	1	1
21	1	1	1	1	1	1	1
22	1	1	1	1	1	1	1
23	1	1	1	1	1	1	1

SUMMER SEASON MAY 21 THRU SEPTEMBER 15

HR/DAY	MON	TUES	WEDS	THUR	FRI	SAT	SUN
0	1	1	1	1	1	1	1
1	1	1	1	1	1	1	1
2	1	1	1	1	1	1	1
3	1	1	1	1	1	1	1
4	1	1	1	1	1	1	1
5	1	1	1	1	1	1	1
6	1	1	1	1	1	1	1
7	2	2	2	2	2	1	1
8	2	2	2	2	2	2	1
9	2	2	2	2	2	2	2
10	2	2	2	2	2	2	2
11	2	2	2	2	2	2	2
12	2	2	2	2	2	2	2
13	2	2	2	2	2	2	2
14	2	2	2	2	2	2	2
15	2	2	2	2	2	2	2
16	2	2	2	2	2	2	2
17	2	2	2	2	2	2	2
18	2	1	2	2	2	2	2
19	1	1	1	1	2	1	2
20	1	1	1	1	1	1	1
21	1	1	1	1	1	1	1
22	1	1	1	1	1	1	1
23	1	1	1	1	1	1	1

LANES REQUIRED TO BE OPEN BY HOUR AND TIME OF DAY

FALL SEASON SEPTEMBER 16 THRU November 30

HR/DAY	MON	TUES	WEDS	THUR	FRI	SAT	SUN
0	1	1	1	1	1	1	1
1	1	1	1	1	1	1	1
2	1	1	1	1	1	1	1
3	1	1	1	1	1	1	1
4	1	1	1	1	1	1	1
5	1	1	1	1	1	1	1
6	1	1	1	1	1	1	1
7	2	1	2	2	2	1	1
8	2	1	2	1	2	1	1
9	2	1	2	2	2	2	2
10	2	2	2	2	2	2	2
11	2	2	2	2	2	2	2
12	2	2	2	2	2	2	2
13	2	2	2	2	2	2	2
14	2	2	2	2	2	2	2
15	2	2	2	2	2	2	2
16	2	2	2	2	2	2	2
17	2	2	2	2	2	2	2
18	1	2	2	1	2	1	2
19	1	1	1	1	1	1	2
20	1	1	1	1	1	1	1
21	1	1	1	1	1	1	1
22	1	1	1	1	1	1	1
23	1	1	1	1	1	1	1

WINTER SEAS. DECEMBER 1 THRU February 28

HR/DAY	MON	TUES	WEDS	THUR	FRI	SAT	SUN
0	1	1	1	1	1	1	1
1	1	1	1	1	1	1	1
2	1	1	1	1	1	1	1
3	1	1	1	1	1	1	1
4	1	1	1	1	1	1	1
5	1	1	1	1	1	1	1
6	1	1	1	1	1	1	1
7	1	1	1	1	1	1	1
8	1	1	1	1	1	1	1
9	1	1	1	1	1	1	1
10	2	1	2	1	2	2	2
11	2	1	2	1	2	2	2
12	2	2	2	1	2	2	2
13	2	2	2	2	2	2	2
14	2	2	2	2	2	2	2
15	2	2	2	2	2	2	2
16	2	2	2	2	2	2	2
17	2	2	2	2	2	1	2
18	1	1	1	1	2	1	1
19	1	1	1	1	1	1	1
20	1	1	1	1	1	1	1
21	1	1	1	1	1	1	1
22	1	1	1	1	1	1	1
23	1	1	1	1	1	1	1

NOTES:

1) THE NEW YORK STATE THRUWAY IS A LIMITED ACCESS, HIGH-SPEED, HIGH-VOLUME HIGHWAY. TRAFFIC SHALL BE MAINTAINED IN ACCORDANCE WITH THE *MANUAL ON UNIFORM TRAFFIC CONTROL DEVICES (MUTCD)*, THE *WORK ZONE TRAFFIC CONTROL PLANS*, AND THE *STANDARD SPECIFICATIONS* SECTION 619 AS AMENDED BY THE AUTHORITY.

2) LANE CLOSURES ON THE THRUWAY SHALL ONLY BE ALLOWED IN ACCORDANCE WITH THESE TRAFFIC MANAGEMENT TABLE(S), UNLESS INDICATED OTHERWISE IN THE CONTRACT PLANS OR PROPOSAL DOCUMENTS.

3) LANE CLOSURE CHARTS SHALL APPLY AS FOLLOWS:

- 1,150 VEH/HR/LANE: APPLIES TO ALL WORK REQUIRING LANE CLOSURE(S) EXCEPT AS PERMITTED BELOW.

- 1,300 VEH/HR/LANE: APPLIES TO NON-EVASIVE WORK WHERE WORKERS AND/OR EQUIPMENT ARE LOCATED 4 FT. OR MORE FROM TRAVEL (SPACE) LANE, OR AS APPROVED BY THE THRUWAY PROJECT ENGINEER. WORK SHOULD BE ABLE TO BE IMMEDIATELY STOPPED AND LANE CLOSURE(S) REMOVED IN THE EVENT QUEUES, GREATER THAN 1 MILE, DEVELOP.

NEW YORK STATE OF OPPORTUNITY. Thruway Authority

U.S. CUSTOMARY STANDARD SHEET

LANE CLOSURE CHARTS
1,300 VEHICLES PER HOUR
SYRACUSE DIVISION
(SHEET 16 OF 18)

APPROVED SEPTEMBER 1, 2018

/S/ PATRICK THOMPSON, P.E.
DIRECTOR DESIGN SUPPORT SERVICES BUREAU

ISSUED UNDER DB 18-003

TA 619-36

I-90 WESTBOUND INTERCHANGES 43 TO 44 (1,300 VEH/HR/LANE)

LANES REQUIRED TO BE OPEN BY HOUR AND TIME OF DAY

SPRING SEASON MARCH 1 THRU MAY 20

HR/DAY	MON	TUES	WEDS	THUR	FRI	SAT	SUN
0	1	1	1	1	1	1	1
1	1	1	1	1	1	1	1
2	1	1	1	1	1	1	1
3	1	1	1	1	1	1	1
4	1	1	1	1	1	1	1
5	1	1	1	1	1	1	1
6	1	1	1	1	1	1	1
7	2	1	1	1	1	1	1
8	2	1	1	1	1	1	1
9	1	1	1	1	1	1	1
10	1	1	1	1	2	2	1
11	2	1	1	1	2	2	2
12	2	1	1	1	2	2	2
13	2	1	1	2	2	2	2
14	2	2	2	2	2	2	2
15	2	2	2	2	2	2	2
16	2	2	2	2	2	2	2
17	2	2	2	2	2	2	2
18	2	1	1	2	2	1	2
19	2	1	1	1	2	1	2
20	1	1	1	1	1	1	2
21	1	1	1	1	1	1	1
22	1	1	1	1	1	1	1
23	1	1	1	1	1	1	1

SUMMER SEASON MAY 21 THRU SEPTEMBER 15

HR/DAY	MON	TUES	WEDS	THUR	FRI	SAT	SUN
0	1	1	1	1	1	1	1
1	1	1	1	1	1	1	1
2	1	1	1	1	1	1	1
3	1	1	1	1	1	1	1
4	1	1	1	1	1	1	1
5	1	1	1	1	1	1	1
6	1	1	1	1	1	1	1
7	2	2	2	2	2	1	1
8	2	2	2	2	2	1	1
9	2	2	2	2	2	2	1
10	2	2	2	2	2	2	2
11	2	2	2	2	2	2	2
12	2	2	2	2	2	2	2
13	2	2	2	2	2	2	2
14	2	2	2	2	2	2	2
15	2	2	2	2	2	2	2
16	2	2	2	2	2	2	2
17	2	2	2	2	2	2	2
18	2	2	2	2	2	2	2
19	2	1	1	2	2	2	2
20	1	1	1	1	2	2	2
21	1	1	1	1	1	1	2
22	1	1	1	1	1	1	1
23	1	1	1	1	1	1	1

LANES REQUIRED TO BE OPEN BY HOUR AND TIME OF DAY

FALL SEASON SEPTEMBER 16 THRU November 30

HR/DAY	MON	TUES	WEDS	THUR	FRI	SAT	SUN
0	1	1	1	1	1	1	1
1	1	1	1	1	1	1	1
2	1	1	1	1	1	1	1
3	1	1	1	1	1	1	1
4	1	1	1	1	1	1	1
5	1	1	1	1	1	1	1
6	1	1	1	1	1	1	1
7	1	1	1	2	1	1	1
8	1	1	1	2	1	1	1
9	1	1	1	1	1	1	1
10	1	1	1	1	2	2	2
11	2	1	2	2	2	2	2
12	2	1	2	2	2	2	2
13	2	2	2	2	2	2	2
14	2	2	2	2	2	2	2
15	2	2	2	2	2	2	2
16	2	2	2	2	2	2	2
17	2	2	2	2	2	2	2
18	2	2	2	2	2	2	2
19	1	1	1	1	2	1	2
20	1	1	1	1	1	1	2
21	1	1	1	1	1	1	1
22	1	1	1	1	1	1	1
23	1	1	1	1	1	1	1

WINTER SEAS. DECEMBER 1 THRU February 28

HR/DAY	MON	TUES	WEDS	THUR	FRI	SAT	SUN
0	1	1	`	1	1	1	1
1	1	1	1	1	1	1	1
2	1	1	1	1	1	1	1
3	1	1	1	1	1	1	1
4	1	1	1	1	1	1	1
5	1	1	1	1	1	1	1
6	1	1	1	1	1	1	1
7	1	1	1	1	1	1	1
8	1	1	1	1	1	1	1
9	1	1	1	1	1	1	1
10	1	1	1	1	1	1	1
11	1	1	1	1	2	2	1
12	2	1	2	1	2	2	2
13	2	1	2	1	2	2	2
14	2	2	2	2	2	2	2
15	2	2	2	2	2	2	2
16	2	2	2	2	2	2	2
17	2	2	2	2	2	2	2
18	1	1	1	1	2	1	2
19	1	1	1	1	1	1	1
20	1	1	1	1	1	1	1
21	1	1	1	1	1	1	1
22	1	1	1	1	1	1	1
23	1	1	1	1	1	1	1

I-90 EASTBOUND INTERCHANGES 44 TO 43 (1,300 VEH/HR/LANE)

LANES REQUIRED TO BE OPEN BY HOUR AND TIME OF DAY

SPRING SEASON MARCH 1 THRU MAY 20

HR/DAY	MON	TUES	WEDS	THUR	FRI	SAT	SUN
0	1	1	1	1	1	1	1
1	1	1	1	1	1	1	1
2	1	1	1	1	1	1	1
3	1	1	1	1	1	1	1
4	1	1	1	1	1	1	1
5	1	1	1	1	1	1	1
6	1	1	1	1	1	1	1
7	2	1	1	2	1	1	1
8	1	1	1	2	2	1	1
9	2	1	1	2	2	2	1
10	2	1	1	2	2	2	2
11	2	1	1	2	2	2	2
12	2	1	1	2	2	2	2
13	2	1	2	2	2	2	2
14	2	2	2	2	2	2	2
15	2	2	2	2	2	2	2
16	2	2	2	2	2	2	2
17	2	2	2	2	2	2	2
18	1	1	1	2	2	1	2
19	1	1	1	1	1	1	1
20	1	1	1	1	1	1	1
21	1	1	1	1	1	1	1
22	1	1	1	1	1	1	1
23	1	1	1	1	1	1	1

SUMMER SEASON MAY 21 THRU SEPTEMBER 15

HR/DAY	MON	TUES	WEDS	THUR	FRI	SAT	SUN
0	1	1	1	1	1	1	1
1	1	1	1	1	1	1	1
2	1	1	1	1	1	1	1
3	1	1	1	1	1	1	1
4	1	1	1	1	1	1	1
5	1	1	1	1	1	1	1
6	1	1	1	1	1	1	1
7	2	2	2	2	2	1	1
8	2	2	2	2	2	2	1
9	2	2	2	2	2	2	2
10	2	2	2	2	2	2	2
11	2	2	2	2	2	2	2
12	2	2	2	2	2	2	2
13	2	2	2	2	2	2	2
14	2	2	2	2	2	2	2
15	2	2	2	2	2	2	2
16	2	2	2	2	2	2	2
17	2	2	2	2	2	2	2
18	2	1	2	2	2	2	2
19	1	1	1	1	2	1	2
20	1	1	1	1	1	1	1
21	1	1	1	1	1	1	1
22	1	1	1	1	1	1	1
23	1	1	1	1	1	1	1

LANES REQUIRED TO BE OPEN BY HOUR AND TIME OF DAY

FALL SEASON SEPTEMBER 16 THRU November 30

HR/DAY	MON	TUES	WEDS	THUR	FRI	SAT	SUN
0	1	1	1	1	1	1	1
1	1	1	1	1	1	1	1
2	1	1	1	1	1	1	1
3	1	1	1	1	1	1	1
4	1	1	1	1	1	1	1
5	1	1	1	1	1	1	1
6	1	1	1	1	1	1	1
7	2	1	2	2	2	1	1
8	2	1	2	1	2	1	1
9	2	1	2	2	2	2	2
10	2	2	2	2	2	2	2
11	2	2	2	2	2	2	2
12	2	2	2	2	2	2	2
13	2	2	2	2	2	2	2
14	2	2	2	2	2	2	2
15	2	2	2	2	2	2	2
16	2	2	2	2	2	2	2
17	2	2	2	2	2	2	2
18	1	2	2	1	2	1	2
19	1	1	1	1	1	1	2
20	1	1	1	1	1	1	1
21	1	1	1	1	1	1	1
22	1	1	1	1	1	1	1
23	1	1	1	1	1	1	1

WINTER SEAS. DECEMBER 1 THRU February 28

HR/DAY	MON	TUES	WEDS	THUR	FRI	SAT	SUN
0	1	1	1	1	1	1	1
1	1	1	1	1	1	1	1
2	1	1	1	1	1	1	1
3	1	1	1	1	1	1	1
4	1	1	1	1	1	1	1
5	1	1	1	1	1	1	1
6	1	1	1	1	1	1	1
7	1	1	1	1	1	1	1
8	1	1	1	1	1	1	1
9	1	1	1	1	1	1	1
10	2	1	2	1	2	2	2
11	2	1	2	1	2	2	2
12	2	2	2	1	2	2	2
13	2	2	2	2	2	2	2
14	2	2	2	2	2	2	2
15	2	2	2	2	2	2	2
16	2	2	2	2	2	2	2
17	2	2	2	2	2	1	2
18	1	1	1	1	2	1	1
19	1	1	1	1	1	1	1
20	1	1	1	1	1	1	1
21	1	1	1	1	1	1	1
22	1	1	1	1	1	1	1
23	1	1	1	1	1	1	1

NOTES:

1) THE NEW YORK STATE THRUWAY IS A LIMITED ACCESS, HIGH-SPEED, HIGH-VOLUME HIGHWAY. TRAFFIC SHALL BE MAINTAINED IN ACCORDANCE WITH THE *MANUAL ON UNIFORM TRAFFIC CONTROL DEVICES (MUTCD)*, THE *WORK ZONE TRAFFIC CONTROL PLANS*, AND THE *STANDARD SPECIFICATIONS* SECTION 619 AS AMENDED BY THE AUTHORITY.

2) LANE CLOSURES ON THE THRUWAY SHALL ONLY BE ALLOWED IN ACCORDANCE WITH THESE TRAFFIC MANAGEMENT TABLE(S), UNLESS INDICATED OTHERWISE IN THE CONTRACT PLANS OR PROPOSAL DOCUMENTS.

3) LANE CLOSURE CHARTS SHALL APPLY AS FOLLOWS:

- 1,150 VEH/HR/LANE: APPLIES TO ALL WORK REQUIRING LANE CLOSURE(S) EXCEPT AS PERMITTED BELOW.

- 1,300 VEH/HR/LANE: APPLIES TO NON-EVASIVE WORK WHERE WORKERS AND/OR EQUIPMENT ARE LOCATED 4 FT. OR MORE FROM TRAVEL (SPACE) LANE, OR AS APPROVED BY THE THRUWAY PROJECT ENGINEER. WORK SHOULD BE ABLE TO BE IMMEDIATELY STOPPED AND LANE CLOSURE(S) REMOVED IN THE EVENT QUEUES, GREATER THAN 1 MILE, DEVELOP.

NEW YORK STATE OF OPPORTUNITY. Thruway Authority

U.S. CUSTOMARY STANDARD SHEET

LANE CLOSURE CHARTS
1,300 VEHICLES PER HOUR
SYRACUSE DIVISION
(SHEET 17 OF 18)

APPROVED SEPTEMBER 1, 2018

/S/ PATRICK THOMPSON, P.E.
DIRECTOR DESIGN SUPPORT SERVICES BUREAU

ISSUED UNDER DB 18-003

TA 619-36

I-90 WESTBOUND INTERCHANGES 44 TO 45 (1,300 VEH/HR/LANE)

LANES REQUIRED TO BE OPEN BY HOUR AND TIME OF DAY

SPRING SEASON MARCH 1 THRU MAY 20

HR/DAY	MON	TUES	WEDS	THUR	FRI	SAT	SUN
0	1	1	1	1	1	1	1
1	1	1	1	1	1	1	1
2	1	1	1	1	1	1	1
3	1	1	1	1	1	1	1
4	1	1	1	1	1	1	1
5	1	1	1	1	1	1	1
6	2	2	2	2	2	1	1
7	2	2	2	2	2	1	1
8	2	2	2	2	2	2	1
9	2	2	2	2	2	2	1
10	2	2	2	2	2	2	2
11	2	2	2	2	2	2	2
12	2	2	2	2	2	2	2
13	2	2	2	2	2	2	2
14	2	2	2	2	2	2	2
15	2	2	2	2	3	2	2
16	3	2	2	2	3	2	2
17	2	2	2	2	3	2	2
18	2	2	2	2	2	2	2
19	2	1	1	2	2	2	2
20	2	1	1	1	2	1	2
21	1	1	1	1	1	1	2
22	1	1	1	1	1	1	1
23	1	1	1	1	1	1	1

SUMMER SEASON MAY 21 THRU SEPTEMBER 15

HR/DAY	MON	TUES	WEDS	THUR	FRI	SAT	SUN
0	1	1	1	1	1	1	1
1	1	1	1	1	1	1	1
2	1	1	1	1	1	1	1
3	1	1	1	1	1	1	1
4	1	1	1	1	1	1	1
5	1	1	1	1	1	1	1
6	2	2	2	2	2	1	1
7	3	2	2	2	2	1	1
8	2	2	2	2	2	2	1
9	2	2	2	2	2	2	2
10	2	2	2	2	2	2	2
11	2	2	2	2	2	3	2
12	2	2	2	2	2	3	3
13	2	2	2	2	3	3	3
14	3	2	2	2	3	3	3
15	3	2	2	3	3	3	3
16	3	2	3	3	3	3	3
17	3	2	3	3	3	3	3
18	2	2	2	2	3	2	3
19	2	2	2	2	2	2	3
20	2	1	1	2	2	2	2
21	1	1	1	1	2	2	2
22	1	1	1	1	2	2	1
23	1	1	1	1	2	1	1

LANES REQUIRED TO BE OPEN BY HOUR AND TIME OF DAY

FALL SEASON SEPTEMBER 16 THRU November 30

HR/DAY	MON	TUES	WEDS	THUR	FRI	SAT	SUN
0	1	1	1	1	1	1	1
1	1	1	1	1	1	1	1
2	1	1	1	1	1	1	1
3	1	1	1	1	1	1	1
4	1	1	1	1	1	1	1
5	1	1	1	1	1	1	1
6	2	2	2	2	2	1	1
7	3	3	3	3	3	1	1
8	2	2	2	2	2	2	1
9	2	2	2	2	2	2	2
10	2	2	2	2	2	2	2
11	2	2	2	2	2	2	2
12	2	2	2	2	2	2	2
13	2	2	2	2	2	2	3
14	2	2	2	2	2	2	3
15	2	2	2	2	3	2	3
16	3	3	2	3	3	2	3
17	2	2	2	3	3	2	3
18	2	2	2	2	2	2	3
19	2	1	2	2	2	2	2
20	1	1	1	2	2	2	2
21	1	1	1	1	1	1	1
22	1	1	1	1	1	1	1
23	1	1	1	1	1	1	1

WINTER SEAS. DECEMBER 1 THRU February 28

HR/DAY	MON	TUES	WEDS	THUR	FRI	SAT	SUN
0	1	1	1	1	1	1	1
1	1	1	1	1	1	1	1
2	1	1	1	1	1	1	1
3	1	1	1	1	1	1	1
4	1	1	1	1	1	1	1
5	1	1	1	1	1	1	1
6	2	2	2	2	2	1	1
7	3	3	3	3	2	1	1
8	2	2	2	2	2	1	1
9	2	2	2	2	2	2	1
10	2	2	2	2	2	2	2
11	2	2	2	2	2	2	2
12	2	2	2	2	2	2	2
13	2	2	2	2	2	2	2
14	2	2	2	2	2	2	2
15	2	2	2	2	3	2	2
16	2	2	2	2	3	2	2
17	2	2	2	2	3	2	2
18	2	2	2	2	2	2	2
19	1	1	1	1	2	1	2
20	1	1	1	1	1	1	1
21	1	1	1	1	1	1	1
22	1	1	1	1	1	1	1
23	1	1	1	1	1	1	1

I-90 EASTBOUND INTERCHANGES 45 TO 44 (1,300 VEH/HR/LANE)

LANES REQUIRED TO BE OPEN BY HOUR AND TIME OF DAY

SPRING SEASON MARCH 1 THRU MAY 20

HR/DAY	MON	TUES	WEDS	THUR	FRI	SAT	SUN
0	1	1	1	1	1	1	1
1	1	1	1	1	1	1	1
2	1	1	1	1	1	1	1
3	1	1	1	1	1	1	1
4	1	1	1	1	1	1	1
5	1	1	1	1	1	1	1
6	1	1	1	1	1	1	1
7	2	2	2	2	2	1	1
8	2	2	2	2	2	2	1
9	2	2	2	2	2	2	2
10	2	2	2	2	2	2	2
11	2	2	2	2	2	2	2
12	2	2	2	2	2	2	2
13	2	2	2	2	3	2	2
14	2	2	2	2	3	2	2
15	2	2	2	3	3	2	2
16	2	3	3	3	3	2	2
17	3	3	3	3	3	2	2
18	2	2	2	2	2	2	2
19	1	1	2	2	2	2	2
20	1	1	1	1	2	1	1
21	1	1	1	1	1	1	1
22	1	1	1	1	1	1	1
23	1	1	1	1	1	1	1

SUMMER SEASON MAY 21 THRU SEPTEMBER 15

HR/DAY	MON	TUES	WEDS	THUR	FRI	SAT	SUN
0	1	1	1	1	1	1	1
1	1	1	1	1	1	1	1
2	1	1	1	1	1	1	1
3	1	1	1	1	1	1	1
4	1	1	1	1	1	1	1
5	1	1	1	1	1	1	1
6	2	1	1	1	1	1	1
7	2	2	2	2	2	2	1
8	2	2	2	2	2	2	2
9	2	2	2	2	2	2	2
10	2	2	2	2	3	3	3
11	2	2	2	2	3	3	3
12	2	2	2	2	3	3	3
13	2	2	2	2	3	3	3
14	2	2	2	3	3	3	3
15	2	2	3	3	3	3	3
16	3	3	3	3	3	2	3
17	3	3	3	3	3	2	2
18	2	2	2	2	3	2	2
19	2	2	2	2	2	2	2
20	1	1	1	2	2	2	2
21	1	1	1	1	2	1	1
22	1	1	1	1	1	1	1
23	1	1	1	1	1	1	1

LANES REQUIRED TO BE OPEN BY HOUR AND TIME OF DAY

FALL SEASON SEPTEMBER 16 THRU November 30

HR/DAY	MON	TUES	WEDS	THUR	FRI	SAT	SUN
0	1	1	1	1	1	1	1
1	1	1	1	1	1	1	1
2	1	1	1	1	1	1	1
3	1	1	1	1	1	1	1
4	1	1	1	1	1	1	1
5	1	1	1	1	1	1	1
6	1	1	1	1	1	1	1
7	2	2	2	2	2	1	1
8	2	2	2	2	2	2	1
9	2	2	2	2	2	2	2
10	2	2	2	2	2	2	2
11	2	2	2	2	2	2	2
12	2	2	2	2	2	2	3
13	2	2	2	2	3	2	3
14	2	2	2	2	3	2	3
15	2	3	3	3	3	2	3
16	3	3	3	3	3	2	3
17	3	3	3	3	3	2	2
18	2	2	2	2	3	2	2
19	1	2	2	2	2	2	2
20	1	1	1	1	2	1	2
21	1	1	1	1	1	1	1
22	1	1	1	1	1	1	1
23	1	1	1	1	1	1	1

WINTER SEAS. DECEMBER 1 THRU February 28

HR/DAY	MON	TUES	WEDS	THUR	FRI	SAT	SUN
0	1	1	1	1	1	1	1
1	1	1	1	1	1	1	1
2	1	1	1	1	1	1	1
3	1	1	1	1	1	1	1
4	1	1	1	1	1	1	1
5	1	1	1	1	1	1	1
6	1	1	1	1	1	1	1
7	2	2	2	2	2	1	1
8	2	2	2	2	2	1	1
9	2	2	2	2	2	2	1
10	2	2	2	2	2	2	2
11	2	2	2	2	2	2	2
12	2	2	2	2	2	2	2
13	2	2	2	2	2	2	2
14	2	2	2	2	2	2	2
15	2	2	2	2	3	2	2
16	2	3	3	3	3	2	2
17	3	3	3	3	3	2	2
18	2	2	2	2	2	2	2
19	1	1	1	1	2	1	2
20	1	1	1	1	1	1	1
21	1	1	1	1	1	1	1
22	1	1	1	1	1	1	1
23	1	1	1	1	1	1	1

NOTES:

1) THE NEW YORK STATE THRUWAY IS A LIMITED ACCESS, HIGH-SPEED, HIGH-VOLUME HIGHWAY. TRAFFIC SHALL BE MAINTAINED IN ACCORDANCE WITH THE *MANUAL ON UNIFORM TRAFFIC CONTROL DEVICES (MUTCD)*, THE *WORK ZONE TRAFFIC CONTROL PLANS*, AND THE *STANDARD SPECIFICATIONS* SECTION 619 AS AMENDED BY THE AUTHORITY.

2) LANE CLOSURES ON THE THRUWAY SHALL ONLY BE ALLOWED IN ACCORDANCE WITH THESE TRAFFIC MANAGEMENT TABLE(S), UNLESS INDICATED OTHERWISE IN THE CONTRACT PLANS OR PROPOSAL DOCUMENTS.

3) LANE CLOSURE CHARTS SHALL APPLY AS FOLLOWS:

- 1,150 VEH/HR/LANE: APPLIES TO ALL WORK REQUIRING LANE CLOSURE(S) EXCEPT AS PERMITTED BELOW.

- 1,300 VEH/HR/LANE: APPLIES TO NON-EVASIVE WORK WHERE WORKERS AND/OR EQUIPMENT ARE LOCATED 4 FT. OR MORE FROM TRAVEL (SPACE) LANE, OR AS APPROVED BY THE THRUWAY PROJECT ENGINEER. WORK SHOULD BE ABLE TO BE IMMEDIATELY STOPPED AND LANE CLOSURE(S) REMOVED IN THE EVENT QUEUES, GREATER THAN 1 MILE, DEVELOP.

NEW YORK STATE OF OPPORTUNITY. Thruway Authority

U.S. CUSTOMARY STANDARD SHEET

LANE CLOSURE CHARTS
1,300 VEHICLES PER HOUR
SYRACUSE DIVISION
(SHEET 18 OF 18)

APPROVED SEPTEMBER 1, 2018

/S/ PATRICK THOMPSON, P.E.
DIRECTOR DESIGN SUPPORT SERVICES BUREAU

ISSUED UNDER DB 18-003

TA 619-36

I-90 WESTBOUND INTERCHANGES 45 TO 46 (1,300 VEH/HR/LANE)

LANES REQUIRED TO BE OPEN BY HOUR AND TIME OF DAY

SPRING SEASON MARCH 1 THRU MAY 20

HR/DAY	MON	TUES	WEDS	THUR	FRI	SAT	SUN
0	1	1	1	1	1	1	1
1	1	1	1	1	1	1	1
2	1	1	1	1	1	1	1
3	1	1	1	1	1	1	1
4	1	1	1	1	1	1	1
5	1	1	1	1	1	1	1
6	1	1	1	1	1	1	1
7	2	2	2	2	1	1	1
8	1	1	1	1	1	1	1
9	1	1	1	1	1	1	1
10	1	1	1	1	1	1	1
11	1	1	1	1	1	1	1
12	1	1	1	1	2	1	1
13	1	1	1	1	2	1	1
14	1	1	1	1	2	1	1
15	2	1	1	1	2	1	2
16	2	1	2	2	2	1	2
17	2	1	1	2	2	1	2
18	1	1	1	1	1	1	1
19	1	1	1	1	1	1	1
20	1	1	1	1	1	1	1
21	1	1	1	1	1	1	1
22	1	1	1	1	1	1	1
23	1	1	1	1	1	1	1

SUMMER SEASON MAY 21 THRU SEPTEMBER 15

HR/DAY	MON	TUES	WEDS	THUR	FRI	SAT	SUN
0	1	1	1	1	1	1	1
1	1	1	1	1	1	1	1
2	1	1	1	1	1	1	1
3	1	1	1	1	1	1	1
4	1	1	1	1	1	1	1
5	1	1	1	1	1	1	1
6	1	1	1	1	1	1	1
7	2	2	2	2	2	1	1
8	1	1	1	1	1	1	1
9	1	1	1	1	1	2	1
10	2	1	1	2	2	2	2
11	2	1	1	2	2	2	2
12	2	1	1	2	2	2	2
13	2	1	1	2	2	2	2
14	2	2	2	2	2	2	2
15	2	2	2	2	2	2	2
16	2	2	2	2	2	2	2
17	2	2	2	2	2	2	2
18	2	1	1	1	2	1	2
19	1	1	1	1	1	1	2
20	1	1	1	1	1	1	1
21	1	1	1	1	1	1	1
22	1	1	1	1	1	1	1
23	1	1	1	1	1	1	1

LANES REQUIRED TO BE OPEN BY HOUR AND TIME OF DAY

FALL SEASON SEPTEMBER 16 THRU November 30

HR/DAY	MON	TUES	WEDS	THUR	FRI	SAT	SUN
0	1	1	1	1	1	1	1
1	1	1	1	1	1	1	1
2	1	1	1	1	1	1	1
3	1	1	1	1	1	1	1
4	1	1	1	1	1	1	1
5	1	1	1	1	1	1	1
6	1	1	1	1	1	1	1
7	2	2	2	2	2	1	1
8	1	1	1	2	1	1	1
9	1	1	1	1	1	1	1
10	1	1	1	1	1	1	1
11	1	1	1	1	1	2	2
12	1	1	1	1	1	2	2
13	1	1	1	1	2	2	2
14	2	1	1	1	2	2	2
15	2	2	2	2	2	2	2
16	2	2	2	2	2	1	2
17	2	2	2	2	2	1	2
18	1	1	1	1	2	1	2
19	1	1	1	1	1	1	1
20	1	1	1	1	1	1	1
21	1	1	1	1	1	1	1
22	1	1	1	1	1	1	1
23	1	1	1	1	1	1	1

WINTER SEAS. DECEMBER 1 THRU February 28

HR/DAY	MON	TUES	WEDS	THUR	FRI	SAT	SUN
0	1	1	1	1	1	1	1
1	1	1	1	1	1	1	1
2	1	1	1	1	1	1	1
3	1	1	1	1	1	1	1
4	1	1	1	1	1	1	1
5	1	1	1	1	1	1	1
6	1	1	1	1	1	1	1
7	2	2	2	2	1	1	1
8	1	1	1	1	1	1	1
9	1	1	1	1	1	1	1
10	1	1	1	1	1	1	1
11	1	1	1	1	1	1	1
12	1	1	1	1	1	1	1
13	1	1	1	1	1	1	1
14	1	1	1	1	1	1	1
15	1	1	1	1	2	1	1
16	1	1	1	1	2	1	1
17	1	1	1	1	2	1	1
18	1	1	1	1	1	1	1
19	1	1	1	1	1	1	1
20	1	1	1	1	1	1	1
21	1	1	1	1	1	1	1
22	1	1	1	1	1	1	1
23	1	1	1	1	1	1	1

I-90 EASTBOUND INTERCHANGES 46 TO 45 (1,300 VEH/HR/LANE)

LANES REQUIRED TO BE OPEN BY HOUR AND TIME OF DAY

SPRING SEASON MARCH 1 THRU MAY 20

HR/DAY	MON	TUES	WEDS	THUR	FRI	SAT	SUN
0	1	1	1	1	1	1	1
1	1	1	1	1	1	1	1
2	1	1	1	1	1	1	1
3	1	1	1	1	1	1	1
4	1	1	1	1	1	1	1
5	1	1	1	1	1	1	1
6	1	1	1	1	1	1	1
7	1	1	1	1	1	1	1
8	1	1	1	1	1	1	1
9	1	1	1	1	1	1	1
10	1	1	1	1	1	1	1
11	1	1	1	1	2	1	1
12	2	1	1	1	2	1	2
13	2	1	1	1	2	1	2
14	2	1	1	1	2	1	2
15	2	1	2	2	2	1	2
16	2	2	2	2	2	1	2
17	2	2	2	2	2	1	2
18	1	1	1	1	2	1	1
19	1	1	1	1	1	1	1
20	1	1	1	1	1	1	1
21	1	1	1	1	1	1	1
22	1	1	1	1	1	1	1
23	1	1	1	1	1	1	1

SUMMER SEASON MAY 21 THRU SEPTEMBER 15

HR/DAY	MON	TUES	WEDS	THUR	FRI	SAT	SUN
0	1	1	1	1	1	1	1
1	1	1	1	1	1	1	1
2	1	1	1	1	1	1	1
3	1	1	1	1	1	1	1
4	1	1	1	1	1	1	1
5	1	1	1	1	1	1	1
6	1	1	1	1	1	1	1
7	1	1	1	1	1	1	1
8	1	1	1	1	1	1	1
9	1	1	1	1	2	2	1
10	2	1	1	2	2	2	2
11	2	1	2	2	2	2	2
12	2	1	2	2	2	2	2
13	2	1	2	2	2	2	2
14	2	2	2	2	2	2	2
15	2	2	2	2	2	2	2
16	2	2	2	2	2	2	2
17	2	2	2	2	2	1	2
18	1	1	1	2	2	1	2
19	1	1	1	1	1	1	2
20	1	1	1	1	1	1	1
21	1	1	1	1	1	1	1
22	1	1	1	1	1	1	1
23	1	1	1	1	1	1	1

LANES REQUIRED TO BE OPEN BY HOUR AND TIME OF DAY

FALL SEASON SEPTEMBER 16 THRU November 30

HR/DAY	MON	TUES	WEDS	THUR	FRI	SAT	SUN
0	1	1	1	1	1	1	1
1	1	1	1	1	1	1	1
2	1	1	1	1	1	1	1
3	1	1	1	1	1	1	1
4	1	1	1	1	1	1	1
5	1	1	1	1	1	1	1
6	1	1	1	1	1	1	1
7	1	1	1	1	1	1	1
8	1	1	1	1	1	1	1
9	1	1	1	1	1	1	1
10	2	1	1	1	2	1	1
11	2	1	1	1	2	1	2
12	1	1	1	1	2	1	2
13	2	1	1	1	2	1	2
14	2	2	1	2	2	1	2
15	2	2	2	2	2	1	2
16	2	2	2	2	2	1	2
17	2	2	2	2	2	1	2
18	1	1	1	1	2	1	2
19	1	1	1	1	1	1	2
20	1	1	1	1	1	1	1
21	1	1	1	1	1	1	1
22	1	1	1	1	1	1	1
23	1	1	1	1	1	1	1

WINTER SEAS. DECEMBER 1 THRU February 28

HR/DAY	MON	TUES	WEDS	THUR	FRI	SAT	SUN
0	1	1	1	1	1	1	1
1	1	1	1	1	1	1	1
2	1	1	1	1	1	1	1
3	1	1	1	1	1	1	1
4	1	1	1	1	1	1	1
5	1	1	1	1	1	1	1
6	1	1	1	1	1	1	1
7	1	1	1	1	1	1	1
8	1	1	1	1	1	1	1
9	1	1	1	1	1	1	1
10	1	1	1	1	1	1	1
11	1	1	1	1	1	1	1
12	1	1	1	1	1	1	1
13	1	1	1	1	1	1	1
14	1	1	1	1	2	1	1
15	1	1	1	1	2	1	1
16	2	2	2	2	2	1	1
17	2	2	2	2	2	1	1
18	1	1	1	1	1	1	1
19	1	1	1	1	1	1	1
20	1	1	1	1	1	1	1
21	1	1	1	1	1	1	1
22	1	1	1	1	1	1	1
23	1	1	1	1	1	1	1

NOTES:

1) THE NEW YORK STATE THRUWAY IS A LIMITED ACCESS, HIGH-SPEED, HIGH-VOLUME HIGHWAY. TRAFFIC SHALL BE MAINTAINED IN ACCORDANCE WITH THE *MANUAL ON UNIFORM TRAFFIC CONTROL DEVICES (MUTCD)*, THE *WORK ZONE TRAFFIC CONTROL PLANS*, AND THE *STANDARD SPECIFICATIONS* SECTION 619 AS AMENDED BY THE AUTHORITY.

2) LANE CLOSURES ON THE THRUWAY SHALL ONLY BE ALLOWED IN ACCORDANCE WITH THESE TRAFFIC MANAGEMENT TABLE(S), UNLESS INDICATED OTHERWISE IN THE CONTRACT PLANS OR PROPOSAL DOCUMENTS.

3) LANE CLOSURE CHARTS SHALL APPLY AS FOLLOWS:

- 1,150 VEH/HR/LANE: APPLIES TO ALL WORK REQUIRING LANE CLOSURE(S) EXCEPT AS PERMITTED BELOW.

- 1,300 VEH/HR/LANE: APPLIES TO NON-EVASIVE WORK WHERE WORKERS AND/OR EQUIPMENT ARE LOCATED 4 FT. OR MORE FROM TRAVEL (SPACE) LANE, OR AS APPROVED BY THE THRUWAY PROJECT ENGINEER. WORK SHOULD BE ABLE TO BE IMMEDIATELY STOPPED AND LANE CLOSURE(S) REMOVED IN THE EVENT QUEUES, GREATER THAN 1 MILE, DEVELOP.

NEW YORK STATE OF OPPORTUNITY. Thruway Authority

U.S. CUSTOMARY STANDARD SHEET

LANE CLOSURE CHARTS
1,300 VEHICLES PER HOUR
BUFFALO DIVISION
(SHEET 1 OF 37)

APPROVED SEPTEMBER 1, 2018

/S/ PATRICK THOMPSON, P.E.
DIRECTOR DESIGN SUPPORT SERVICES BUREAU

ISSUED UNDER DB 18-003

TA 619-37

I-90 WESTBOUND INTERCHANGES 46 TO 47 (1,300 VEH/HR/LANE)

LANES REQUIRED TO BE OPEN BY HOUR AND TIME OF DAY

SPRING SEASON MARCH 1 THRU MAY 20

HR/DAY	MON	TUES	WEDS	THUR	FRI	SAT	SUN
0	1	1	1	1	1	1	1
1	1	1	1	1	1	1	1
2	1	1	1	1	1	1	1
3	1	1	1	1	1	1	1
4	1	1	1	1	1	1	1
5	1	1	1	1	1	1	1
6	1	1	1	1	1	1	1
7	1	1	1	1	1	1	1
8	1	1	1	1	1	1	1
9	1	1	1	1	1	1	1
10	1	1	1	1	1	1	1
11	1	1	1	1	1	1	1
12	1	1	1	1	1	1	1
13	1	1	1	1	2	1	1
14	1	1	1	1	2	1	1
15	2	1	1	1	2	1	1
16	2	1	1	2	2	1	2
17	2	1	1	1	2	1	2
18	1	1	1	1	1	1	1
19	1	1	1	1	1	1	1
20	1	1	1	1	1	1	1
21	1	1	1	1	1	1	1
22	1	1	1	1	1	1	1
23	1	1	1	1	1	1	1

SUMMER SEASON MAY 21 THRU SEPTEMBER 15

HR/DAY	MON	TUES	WEDS	THUR	FRI	SAT	SUN
0	1	1	1	1	1	1	1
1	1	1	1	1	1	1	1
2	1	1	1	1	1	1	1
3	1	1	1	1	1	1	1
4	1	1	1	1	1	1	1
5	1	1	1	1	1	1	1
6	1	1	1	1	1	1	1
7	1	1	1	1	1	1	1
8	1	1	1	1	1	1	1
9	1	1	1	1	1	1	1
10	1	1	1	1	2	2	2
11	2	1	1	2	2	2	2
12	2	1	1	2	2	2	2
13	2	1	1	2	2	2	2
14	2	1	2	2	2	2	2
15	2	2	2	2	2	2	2
16	2	2	2	2	2	2	2
17	2	2	2	2	2	2	2
18	1	1	1	1	2	1	2
19	1	1	1	1	1	1	2
20	1	1	1	1	1	1	1
21	1	1	1	1	1	1	1
22	1	1	1	1	1	1	1
23	1	1	1	1	1	1	1

LANES REQUIRED TO BE OPEN BY HOUR AND TIME OF DAY

FALL SEASON SEPTEMBER 16 THRU November 30

HR/DAY	MON	TUES	WEDS	THUR	FRI	SAT	SUN
0	1	1	1	1	1	1	1
1	1	1	1	1	1	1	1
2	1	1	1	1	1	1	1
3	1	1	1	1	1	1	1
4	1	1	1	1	1	1	1
5	1	1	1	1	1	1	1
6	1	1	1	1	1	1	1
7	1	1	1	1	1	1	1
8	1	1	1	1	1	1	1
9	1	1	1	1	1	1	1
10	1	1	1	1	1	1	2
11	1	1	1	1	1	1	2
12	1	1	1	1	1	1	2
13	1	1	1	1	2	1	2
14	2	1	1	1	2	2	2
15	2	2	2	2	2	2	2
16	2	2	2	2	2	1	2
17	2	2	1	2	2	1	2
18	1	1	1	1	2	1	2
19	1	1	1	1	1	1	1
20	1	1	1	1	1	1	1
21	1	1	1	1	1	1	1
22	1	1	1	1	1	1	1
23	1	1	1	1	1	1	1

WINTER SEAS. DECEMBER 1 THRU February 28

HR/DAY	MON	TUES	WEDS	THUR	FRI	SAT	SUN
0	1	1	1	1	1	1	1
1	1	1	1	1	1	1	1
2	1	1	1	1	1	1	1
3	1	1	1	1	1	1	1
4	1	1	1	1	1	1	1
5	1	1	1	1	1	1	1
6	1	1	1	1	1	1	1
7	1	1	1	1	1	1	1
8	1	1	1	1	1	1	1
9	1	1	1	1	1	1	1
10	1	1	1	1	1	1	1
11	1	1	1	1	1	1	1
12	1	1	1	1	1	1	1
13	1	1	1	1	1	1	1
14	1	1	1	1	1	1	1
15	1	1	1	1	2	1	1
16	1	1	1	1	2	1	1
17	1	1	1	1	2	1	1
18	1	1	1	1	1	1	1
19	1	1	1	1	1	1	1
20	1	1	1	1	1	1	1
21	1	1	1	1	1	1	1
22	1	1	1	1	1	1	1
23	1	1	1	1	1	1	1

I-90 EASTBOUND INTERCHANGES 47 TO 46 (1,300 VEH/HR/LANE)

LANES REQUIRED TO BE OPEN BY HOUR AND TIME OF DAY

SPRING SEASON MARCH 1 THRU MAY 20

HR/DAY	MON	TUES	WEDS	THUR	FRI	SAT	SUN
0	1	1	1	1	1	1	1
1	1	1	1	1	1	1	1
2	1	1	1	1	1	1	1
3	1	1	1	1	1	1	1
4	1	1	1	1	1	1	1
5	1	1	1	1	1	1	1
6	1	1	1	1	1	1	1
7	1	1	1	1	1	1	1
8	1	1	1	1	1	1	1
9	1	1	1	1	1	1	1
10	1	1	1	1	1	1	1
11	1	1	1	1	1	1	1
12	1	1	1	1	1	1	1
13	1	1	1	1	2	1	2
14	1	1	1	1	2	1	2
15	1	1	1	1	2	1	2
16	1	1	1	1	2	1	2
17	1	1	1	1	2	1	2
18	1	1	1	1	1	1	1
19	1	1	1	1	1	1	1
20	1	1	1	1	1	1	1
21	1	1	1	1	1	1	1
22	1	1	1	1	1	1	1
23	1	1	1	1	1	1	1

SUMMER SEASON MAY 21 THRU SEPTEMBER 15

HR/DAY	MON	TUES	WEDS	THUR	FRI	SAT	SUN
0	1	1	1	1	1	1	1
1	1	1	1	1	1	1	1
2	1	1	1	1	1	1	1
3	1	1	1	1	1	1	1
4	1	1	1	1	1	1	1
5	1	1	1	1	1	1	1
6	1	1	1	1	1	1	1
7	1	1	1	1	1	1	1
8	1	1	1	1	1	1	1
9	1	1	1	1	2	2	1
10	2	1	1	2	2	2	2
11	2	1	1	2	2	2	2
12	2	1	1	2	2	2	2
13	2	1	1	2	2	2	2
14	2	1	2	2	2	2	2
15	2	1	2	2	2	2	2
16	2	1	2	2	2	2	2
17	1	1	1	2	2	1	2
18	1	1	1	1	2	1	2
19	1	1	1	1	1	1	2
20	1	1	1	1	1	1	1
21	1	1	1	1	1	1	1
22	1	1	1	1	1	1	1
23	1	1	1	1	1	1	1

LANES REQUIRED TO BE OPEN BY HOUR AND TIME OF DAY

FALL SEASON SEPTEMBER 16 THRU November 30

HR/DAY	MON	TUES	WEDS	THUR	FRI	SAT	SUN
0	1	1	1	1	1	1	1
1	1	1	1	1	1	1	1
2	1	1	1	1	1	1	1
3	1	1	1	1	1	1	1
4	1	1	1	1	1	1	1
5	1	1	1	1	1	1	1
6	1	1	1	1	1	1	1
7	1	1	1	1	1	1	1
8	1	1	1	1	1	1	1
9	1	1	1	1	1	1	1
10	1	1	1	1	1	1	1
11	1	1	1	1	2	1	2
12	1	1	1	1	2	1	2
13	1	1	1	1	2	1	2
14	1	1	1	1	2	1	2
15	1	1	1	1	2	1	2
16	1	1	1	1	2	1	2
17	1	1	1	1	2	1	2
18	1	1	1	1	1	1	2
19	1	1	1	1	1	1	2
20	1	1	1	1	1	1	1
21	1	1	1	1	1	1	1
22	1	1	1	1	1	1	1
23	1	1	1	1	1	1	1

WINTER SEAS. DECEMBER 1 THRU February 28

HR/DAY	MON	TUES	WEDS	THUR	FRI	SAT	SUN
0	1	1	1	1	1	1	1
1	1	1	1	1	1	1	1
2	1	1	1	1	1	1	1
3	1	1	1	1	1	1	1
4	1	1	1	1	1	1	1
5	1	1	1	1	1	1	1
6	1	1	1	1	1	1	1
7	1	1	1	1	1	1	1
8	1	1	1	1	1	1	1
9	1	1	1	1	1	1	1
10	1	1	1	1	1	1	1
11	1	1	1	1	1	1	1
12	1	1	1	1	1	1	1
13	1	1	1	1	1	1	1
14	1	1	1	1	1	1	1
15	1	1	1	1	1	1	1
16	1	1	1	1	1	1	1
17	1	1	1	1	1	1	1
18	1	1	1	1	1	1	1
19	1	1	1	1	1	1	1
20	1	1	1	1	1	1	1
21	1	1	1	1	1	1	1
22	1	1	1	1	1	1	1
23	1	1	1	1	1	1	1

NOTES:

1) THE NEW YORK STATE THRUWAY IS A LIMITED ACCESS, HIGH-SPEED, HIGH-VOLUME HIGHWAY. TRAFFIC SHALL BE MAINTAINED IN ACCORDANCE WITH THE *MANUAL ON UNIFORM TRAFFIC CONTROL DEVICES (MUTCD)*, THE *WORK ZONE TRAFFIC CONTROL PLANS*, AND THE *STANDARD SPECIFICATIONS* SECTION 619 AS AMENDED BY THE AUTHORITY.

2) LANE CLOSURES ON THE THRUWAY SHALL ONLY BE ALLOWED IN ACCORDANCE WITH THESE TRAFFIC MANAGEMENT TABLE(S), UNLESS INDICATED OTHERWISE IN THE CONTRACT PLANS OR PROPOSAL DOCUMENTS.

3) LANE CLOSURE CHARTS SHALL APPLY AS FOLLOWS:

- 1,150 VEH/HR/LANE: APPLIES TO ALL WORK REQUIRING LANE CLOSURE(S) EXCEPT AS PERMITTED BELOW.

- 1,300 VEH/HR/LANE: APPLIES TO NON-EVASIVE WORK WHERE WORKERS AND/OR EQUIPMENT ARE LOCATED 4 FT. OR MORE FROM TRAVEL (SPACE) LANE, OR AS APPROVED BY THE THRUWAY PROJECT ENGINEER. WORK SHOULD BE ABLE TO BE IMMEDIATELY STOPPED AND LANE CLOSURE(S) REMOVED IN THE EVENT QUEUES, GREATER THAN 1 MILE, DEVELOP.

NEW YORK STATE OF OPPORTUNITY. Thruway Authority

U.S. CUSTOMARY STANDARD SHEET

LANE CLOSURE CHARTS
1,300 VEHICLES PER HOUR
BUFFALO DIVISION
(SHEET 2 OF 37)

APPROVED SEPTEMBER 1, 2018

/S/ PATRICK THOMPSON, P.E.
DIRECTOR DESIGN SUPPORT SERVICES BUREAU

ISSUED UNDER DB 18-003

TA 619-37

I-90 WESTBOUND INTERCHANGES 47 TO 48 (1,300 VEH/HR/LANE)

LANES REQUIRED TO BE OPEN BY HOUR AND TIME OF DAY

SPRING SEASON MARCH 1 THRU MAY 20

HR/DAY	MON	TUES	WEDS	THUR	FRI	SAT	SUN
0	1	1	1	1	1	1	1
1	1	1	1	1	1	1	1
2	1	1	1	1	1	1	1
3	1	1	1	1	1	1	1
4	1	1	1	1	1	1	1
5	1	1	1	1	1	1	1
6	1	1	1	1	1	1	1
7	1	1	1	1	1	1	1
8	1	1	1	1	1	1	1
9	1	1	1	1	2	2	1
10	1	1	1	2	2	2	1
11	2	1	1	2	2	2	2
12	2	1	1	1	2	2	2
13	2	1	1	2	2	2	2
14	2	1	2	2	2	2	2
15	2	2	2	2	2	2	2
16	2	2	2	2	2	2	2
17	2	2	2	2	2	2	2
18	2	1	1	1	2	1	2
19	1	1	1	1	2	1	2
20	1	1	1	1	1	1	2
21	1	1	1	1	1	1	1
22	1	1	1	1	1	1	1
23	1	1	1	1	1	1	1

SUMMER SEASON MAY 21 THRU SEPTEMBER 15

HR/DAY	MON	TUES	WEDS	THUR	FRI	SAT	SUN
0	1	1	1	1	1	1	1
1	1	1	1	1	1	1	1
2	1	1	1	1	1	1	1
3	1	1	1	1	1	1	1
4	1	1	1	1	1	1	1
5	1	1	1	1	1	1	1
6	1	1	1	1	1	1	1
7	1	1	1	1	1	1	1
8	2	2	2	2	2	1	1
9	2	2	2	2	2	2	2
10	2	2	2	2	2	2	2
11	2	2	2	2	2	2	2
12	2	2	2	2	2	2	2
13	2	2	2	2	2	2	2
14	2	2	2	2	2	2	2
15	2	2	2	2	2	2	2
16	2	2	2	2	2	2	2
17	2	2	2	2	2	2	2
18	2	2	2	2	2	2	2
19	2	1	1	1	2	2	2
20	1	1	1	1	2	1	2
21	1	1	1	1	1	1	1
22	1	1	1	1	1	1	1
23	1	1	1	1	1	1	1

LANES REQUIRED TO BE OPEN BY HOUR AND TIME OF DAY

FALL SEASON SEPTEMBER 16 THRU November 30

HR/DAY	MON	TUES	WEDS	THUR	FRI	SAT	SUN
0	1	1	1	1	1	1	1
1	1	1	1	1	1	1	1
2	1	1	1	1	1	1	1
3	1	1	1	1	1	1	1
4	1	1	1	1	1	1	1
5	1	1	1	1	1	1	1
6	1	1	1	1	1	1	1
7	1	1	1	1	1	1	1
8	1	2	1	2	1	1	2
9	1	2	1	2	2	1	2
10	1	2	2	2	2	2	2
11	2	2	2	2	2	2	2
12	2	2	2	2	2	2	2
13	2	2	2	2	2	2	2
14	2	2	2	2	2	2	2
15	2	2	2	2	2	2	2
16	2	2	2	2	2	2	2
17	2	2	2	2	2	2	2
18	2	2	2	2	2	2	2
19	1	1	1	1	2	1	2
20	1	1	1	1	1	1	1
21	1	1	1	1	1	1	1
22	1	1	1	1	1	1	1
23	1	1	1	1	1	1	1

WINTER SEAS. DECEMBER 1 THRU February 28

HR/DAY	MON	TUES	WEDS	THUR	FRI	SAT	SUN
0	1	1	1	1	1	1	1
1	1	1	1	1	1	1	1
2	1	1	1	1	1	1	1
3	1	1	1	1	1	1	1
4	1	1	1	1	1	1	1
5	1	1	1	1	1	1	1
6	1	1	1	1	1	1	1
7	1	1	1	1	1	1	1
8	1	2	1	1	1	1	1
9	1	1	1	1	1	1	1
10	1	1	1	1	1	1	2
11	1	1	1	1	2	2	2
12	1	1	1	1	2	2	2
13	2	1	1	1	2	2	2
14	2	2	2	2	2	2	2
15	2	2	2	2	2	2	2
16	2	2	2	2	2	2	2
17	2	2	2	2	2	2	2
18	1	1	1	1	2	1	1
19	1	1	1	1	1	1	1
20	1	1	1	1	1	1	1
21	1	1	1	1	1	1	1
22	1	1	1	1	1	1	1
23	1	1	1	1	1	1	1

I-90 EASTBOUND INTERCHANGES 48 TO 47 (1,300 VEH/HR/LANE)

LANES REQUIRED TO BE OPEN BY HOUR AND TIME OF DAY

SPRING SEASON MARCH 1 THRU MAY 20

HR/DAY	MON	TUES	WEDS	THUR	FRI	SAT	SUN
0	1	1	1	1	1	1	1
1	1	1	1	1	1	1	1
2	1	1	1	1	1	1	1
3	1	1	1	1	1	1	1
4	1	1	1	1	1	1	1
5	1	1	1	1	1	1	1
6	1	1	1	1	1	1	1
7	1	1	1	1	1	1	1
8	1	1	1	1	1	1	1
9	1	1	1	1	2	1	1
10	2	1	1	1	2	2	2
11	2	1	1	1	2	2	2
12	2	1	1	2	2	2	2
13	2	1	2	2	2	2	2
14	2	1	2	2	2	2	2
15	2	2	2	2	2	2	2
16	2	2	2	2	2	2	2
17	2	1	2	2	2	2	2
18	1	1	1	2	2	1	2
19	1	1	1	1	1	1	2
20	1	1	1	1	1	1	2
21	1	1	1	1	1	1	1
22	1	1	1	1	1	1	1
23	1	1	1	1	1	1	1

SUMMER SEASON MAY 21 THRU SEPTEMBER 15

HR/DAY	MON	TUES	WEDS	THUR	FRI	SAT	SUN
0	1	1	1	1	1	1	1
1	1	1	1	1	1	1	1
2	1	1	1	1	1	1	1
3	1	1	1	1	1	1	1
4	1	1	1	1	1	1	1
5	1	1	1	1	1	1	1
6	1	1	1	1	1	1	1
7	2	1	1	2	1	1	1
8	2	1	2	2	2	2	1
9	2	2	2	2	2	2	2
10	2	2	2	2	2	2	2
11	2	2	2	2	2	2	2
12	2	2	2	2	2	2	2
13	2	2	2	2	2	2	2
14	2	2	2	2	2	2	2
15	2	2	2	2	2	2	2
16	2	2	2	2	2	2	2
17	2	2	2	2	2	2	2
18	2	1	2	2	2	2	2
19	1	1	1	1	2	2	2
20	1	1	1	1	1	1	2
21	1	1	1	1	1	1	1
22	1	1	1	1	1	1	1
23	1	1	1	1	1	1	1

LANES REQUIRED TO BE OPEN BY HOUR AND TIME OF DAY

FALL SEASON SEPTEMBER 16 THRU November 30

HR/DAY	MON	TUES	WEDS	THUR	FRI	SAT	SUN
0	1	1	1	1	1	1	1
1	1	1	1	1	1	1	1
2	1	1	1	1	1	1	1
3	1	1	1	1	1	1	1
4	1	1	1	1	1	1	1
5	1	1	1	1	1	1	1
6	1	1	1	1	1	1	1
7	1	2	1	1	1	1	1
8	1	2	1	1	2	1	1
9	2	2	1	1	2	1	1
10	2	2	1	1	2	2	2
11	2	2	1	2	2	2	2
12	2	2	1	2	2	2	2
13	2	2	2	2	2	2	2
14	2	2	2	2	2	2	2
15	2	2	2	2	2	2	2
16	2	2	2	2	2	2	2
17	2	2	2	2	2	2	2
18	1	1	1	1	2	1	2
19	1	1	1	1	1	1	2
20	2	1	1	1	1	1	2
21	1	1	1	1	1	1	1
22	1	1	1	1	1	1	1
23	1	1	1	1	1	1	1

WINTER SEAS. DECEMBER 1 THRU February 28

HR/DAY	MON	TUES	WEDS	THUR	FRI	SAT	SUN
0	1	1	1	1	1	1	1
1	1	1	1	1	1	1	1
2	1	1	1	1	1	1	1
3	1	1	1	1	1	1	1
4	1	1	1	1	1	1	1
5	1	1	1	1	1	1	1
6	1	1	1	1	1	1	1
7	1	1	1	1	1	1	1
8	1	1	1	1	1	1	1
9	1	1	1	1	1	1	1
10	1	1	1	1	1	1	1
11	1	1	1	1	2	2	2
12	1	1	1	2	2	2	2
13	2	2	2	2	2	2	2
14	2	2	2	2	2	2	2
15	2	2	2	2	2	2	2
16	2	2	2	2	2	2	2
17	1	2	1	2	2	1	2
18	1	1	1	1	2	1	2
19	1	1	1	1	1	1	2
20	1	1	1	1	1	1	1
21	1	1	1	1	1	1	1
22	1	1	1	1	1	1	1
23	1	1	1	1	1	1	1

NOTES:

1) THE NEW YORK STATE THRUWAY IS A LIMITED ACCESS, HIGH-SPEED, HIGH-VOLUME HIGHWAY. TRAFFIC SHALL BE MAINTAINED IN ACCORDANCE WITH THE *MANUAL ON UNIFORM TRAFFIC CONTROL DEVICES (MUTCD)*, THE *WORK ZONE TRAFFIC CONTROL PLANS*, AND THE *STANDARD SPECIFICATIONS* SECTION 619 AS AMENDED BY THE AUTHORITY.

2) LANE CLOSURES ON THE THRUWAY SHALL ONLY BE ALLOWED IN ACCORDANCE WITH THESE TRAFFIC MANAGEMENT TABLE(S), UNLESS INDICATED OTHERWISE IN THE CONTRACT PLANS OR PROPOSAL DOCUMENTS.

3) LANE CLOSURE CHARTS SHALL APPLY AS FOLLOWS:

- 1,150 VEH/HR/LANE: APPLIES TO ALL WORK REQUIRING LANE CLOSURE(S) EXCEPT AS PERMITTED BELOW.

- 1,300 VEH/HR/LANE: APPLIES TO NON-EVASIVE WORK WHERE WORKERS AND/OR EQUIPMENT ARE LOCATED 4 FT. OR MORE FROM TRAVEL (SPACE) LANE, OR AS APPROVED BY THE THRUWAY PROJECT ENGINEER. WORK SHOULD BE ABLE TO BE IMMEDIATELY STOPPED AND LANE CLOSURE(S) REMOVED IN THE EVENT QUEUES, GREATER THAN 1 MILE, DEVELOP.

NEW YORK STATE OF OPPORTUNITY. Thruway Authority

U.S. CUSTOMARY STANDARD SHEET

LANE CLOSURE CHARTS
1,300 VEHICLES PER HOUR
BUFFALO DIVISION
(SHEET 3 OF 37)

APPROVED SEPTEMBER 1, 2018

/S/ PATRICK THOMPSON, P.E.
DIRECTOR DESIGN SUPPORT SERVICES BUREAU

ISSUED UNDER DB 18-003

TA 619-37

I-90 WESTBOUND INTERCHANGES 48 TO 48A (1,300 VEH/HR/LANE)

LANES REQUIRED TO BE OPEN BY HOUR AND TIME OF DAY

SPRING SEASON MARCH 1 THRU MAY 20

HR/DAY	MON	TUES	WEDS	THUR	FRI	SAT	SUN
0	1	1	1	1	1	1	1
1	1	1	1	1	1	1	1
2	1	1	1	1	1	1	1
3	1	1	1	1	1	1	1
4	1	1	1	1	1	1	1
5	1	1	1	1	1	1	1
6	1	1	1	1	1	1	1
7	1	1	1	1	1	1	1
8	1	1	1	1	1	1	1
9	1	1	1	1	2	2	1
10	2	1	1	2	2	2	1
11	2	1	1	2	2	2	2
12	2	1	1	2	2	2	2
13	2	1	1	2	2	2	2
14	2	2	2	2	2	2	2
15	2	2	2	2	2	2	2
16	2	2	2	2	2	2	2
17	2	2	2	2	2	2	2
18	2	1	1	2	2	1	2
19	1	1	1	1	2	1	2
20	1	1	1	1	1	1	2
21	1	1	1	1	1	1	1
22	1	1	1	1	1	1	1
23	1	1	1	1	1	1	1

SUMMER SEASON MAY 21 THRU SEPTEMBER 15

HR/DAY	MON	TUES	WEDS	THUR	FRI	SAT	SUN
0	1	1	1	1	1	1	1
1	1	1	1	1	1	1	1
2	1	1	1	1	1	1	1
3	1	1	1	1	1	1	1
4	1	1	1	1	1	1	1
5	1	1	1	1	1	1	1
6	1	1	1	1	1	1	1
7	2	1	1	1	1	1	1
8	2	2	2	2	2	1	1
9	2	2	2	2	2	2	2
10	2	2	2	2	2	2	2
11	2	2	2	2	2	2	2
12	2	2	2	2	2	2	2
13	2	2	2	2	2	2	2
14	2	2	2	2	2	2	2
15	2	2	2	2	2	2	2
16	2	2	2	2	2	2	2
17	2	2	2	2	2	2	2
18	2	2	2	2	2	2	2
19	2	1	1	1	2	2	2
20	1	1	1	1	2	1	2
21	1	1	1	1	1	1	1
22	1	1	1	1	1	1	1
23	1	1	1	1	1	1	1

LANES REQUIRED TO BE OPEN BY HOUR AND TIME OF DAY

FALL SEASON SEPTEMBER 16 THRU November 30

HR/DAY	MON	TUES	WEDS	THUR	FRI	SAT	SUN
0	1	1	1	1	1	1	1
1	1	1	1	1	1	1	1
2	1	1	1	1	1	1	1
3	1	1	1	1	1	1	1
4	1	1	1	1	1	1	1
5	1	1	1	1	1	1	1
6	1	1	1	1	1	1	1
7	1	1	1	2	1	1	1
8	1	1	1	2	2	1	2
9	1	1	1	2	2	1	2
10	2	1	2	2	2	2	2
11	2	1	2	2	2	2	2
12	2	2	2	2	2	2	2
13	2	2	2	2	2	2	2
14	2	2	2	2	2	2	2
15	2	2	2	2	2	2	2
16	2	2	2	2	2	2	2
17	2	2	2	2	2	2	2
18	2	1	2	2	2	2	2
19	1	1	1	1	2	1	2
20	1	1	1	1	1	1	2
21	1	1	1	1	1	1	1
22	1	1	1	1	1	1	1
23	1	1	1	1	1	1	1

WINTER SEAS. DECEMBER 1 THRU February 28

HR/DAY	MON	TUES	WEDS	THUR	FRI	SAT	SUN
0	1	1	1	1	1	1	1
1	1	1	1	1	1	1	1
2	1	1	1	1	1	1	1
3	1	1	1	1	1	1	1
4	1	1	1	1	1	1	1
5	1	1	1	1	1	1	1
6	1	1	1	1	1	1	1
7	1	1	1	1	1	1	1
8	1	1	1	1	1	1	1
9	1	1	1	1	1	1	1
10	1	1	1	1	1	2	2
11	1	1	1	1	2	2	2
12	2	1	1	1	2	2	2
13	2	2	1	1	2	2	2
14	2	2	2	2	2	2	2
15	2	2	2	2	2	2	2
16	2	2	2	2	2	2	2
17	2	2	2	2	2	2	2
18	1	1	1	1	2	1	1
19	1	1	1	1	1	1	1
20	1	1	1	1	1	1	1
21	1	1	1	1	1	1	1
22	1	1	1	1	1	1	1
23	1	1	1	1	1	1	1

I-90 EASTBOUND INTERCHANGES 48A TO 48 (1,300 VEH/HR/LANE)

LANES REQUIRED TO BE OPEN BY HOUR AND TIME OF DAY

SPRING SEASON MARCH 1 THRU MAY 20

HR/DAY	MON	TUES	WEDS	THUR	FRI	SAT	SUN
0	1	1	1	1	1	1	1
1	1	1	1	1	1	1	1
2	1	1	1	1	1	1	1
3	1	1	1	1	1	1	1
4	1	1	1	1	1	1	1
5	1	1	1	1	1	1	1
6	1	1	1	1	1	1	1
7	1	1	1	1	1	1	1
8	1	1	1	2	2	1	1
9	1	1	1	2	2	2	1
10	2	1	1	2	2	2	2
11	2	1	1	2	2	2	2
12	2	1	2	2	2	2	2
13	2	2	2	2	2	2	2
14	2	2	2	2	2	2	2
15	2	2	2	2	2	2	2
16	2	2	2	2	2	2	2
17	2	2	2	2	2	2	2
18	1	1	1	2	2	1	2
19	1	1	1	1	1	1	2
20	1	1	1	1	1	1	1
21	1	1	1	1	1	1	1
22	1	1	1	1	1	1	1
23	1	1	1	1	1	1	1

SUMMER SEASON MAY 21 THRU SEPTEMBER 15

HR/DAY	MON	TUES	WEDS	THUR	FRI	SAT	SUN
0	1	1	1	1	1	1	1
1	1	1	1	1	1	1	1
2	1	1	1	1	1	1	1
3	1	1	1	1	1	1	1
4	1	1	1	1	1	1	1
5	1	1	1	1	1	1	1
6	1	1	1	1	1	1	1
7	2	1	2	2	2	1	1
8	2	2	2	2	2	2	1
9	2	2	2	2	2	2	2
10	2	2	2	2	2	2	2
11	2	2	2	2	2	2	2
12	2	2	2	2	2	2	2
13	2	2	2	2	2	2	2
14	2	2	2	2	2	2	2
15	2	2	2	2	2	2	2
16	2	2	2	2	2	2	2
17	2	2	2	2	2	2	2
18	2	2	2	2	2	2	2
19	1	1	1	1	2	2	2
20	1	1	1	1	1	2	2
21	1	1	1	1	1	1	1
22	1	1	1	1	1	1	1
23	1	1	1	1	1	1	1

LANES REQUIRED TO BE OPEN BY HOUR AND TIME OF DAY

FALL SEASON SEPTEMBER 16 THRU November 30

HR/DAY	MON	TUES	WEDS	THUR	FRI	SAT	SUN
0	1	1	1	1	1	1	1
1	1	1	1	1	1	1	1
2	1	1	1	1	1	1	1
3	1	1	1	1	1	1	1
4	1	1	1	1	1	1	1
5	1	1	1	1	1	1	1
6	1	1	1	1	1	1	1
7	1	2	2	1	1	1	1
8	2	2	2	2	2	1	1
9	2	2	2	1	2	2	1
10	2	2	2	2	2	2	2
11	2	2	2	2	2	2	2
12	2	2	2	2	2	2	2
13	2	2	2	2	2	2	2
14	2	2	2	2	2	2	2
15	2	2	2	2	2	2	2
16	2	2	2	2	2	2	2
17	2	2	2	2	2	2	2
18	1	2	2	1	2	1	2
19	1	1	1	1	1	1	2
20	1	1	1	1	1	1	2
21	1	1	1	1	1	1	1
22	1	1	1	1	1	1	1
23	1	1	1	1	1	1	1

WINTER SEAS. DECEMBER 1 THRU February 28

HR/DAY	MON	TUES	WEDS	THUR	FRI	SAT	SUN
0	1	1	1	1	1	1	1
1	1	1	1	1	1	1	1
2	1	1	1	1	1	1	1
3	1	1	1	1	1	1	1
4	1	1	1	1	1	1	1
5	1	1	1	1	1	1	1
6	1	1	1	1	1	1	1
7	1	1	1	1	1	1	1
8	1	1	1	1	1	1	1
9	1	1	1	1	1	1	1
10	1	1	1	1	2	2	1
11	2	1	2	1	2	2	2
12	2	2	2	2	2	2	2
13	2	2	2	2	2	2	2
14	2	2	2	2	2	2	2
15	2	2	2	2	2	2	2
16	2	2	2	2	2	2	2
17	2	2	2	2	2	1	2
18	1	1	1	1	1	1	2
19	1	1	1	1	1	1	1
20	1	1	1	1	1	1	1
21	1	1	1	1	1	1	1
22	1	1	1	1	1	1	1
23	1	1	1	1	1	1	1

NOTES:

1) THE NEW YORK STATE THRUWAY IS A LIMITED ACCESS, HIGH-SPEED, HIGH-VOLUME HIGHWAY. TRAFFIC SHALL BE MAINTAINED IN ACCORDANCE WITH THE *MANUAL ON UNIFORM TRAFFIC CONTROL DEVICES (MUTCD)*, THE *WORK ZONE TRAFFIC CONTROL PLANS*, AND THE *STANDARD SPECIFICATIONS* SECTION 619 AS AMENDED BY THE AUTHORITY.

2) LANE CLOSURES ON THE THRUWAY SHALL ONLY BE ALLOWED IN ACCORDANCE WITH THESE TRAFFIC MANAGEMENT TABLE(S), UNLESS INDICATED OTHERWISE IN THE CONTRACT PLANS OR PROPOSAL DOCUMENTS.

3) LANE CLOSURE CHARTS SHALL APPLY AS FOLLOWS:

- 1,150 VEH/HR/LANE: APPLIES TO ALL WORK REQUIRING LANE CLOSURE(S) EXCEPT AS PERMITTED BELOW.

- 1,300 VEH/HR/LANE: APPLIES TO NON-EVASIVE WORK WHERE WORKERS AND/OR EQUIPMENT ARE LOCATED 4 FT. OR MORE FROM TRAVEL (SPACE) LANE, OR AS APPROVED BY THE THRUWAY PROJECT ENGINEER. WORK SHOULD BE ABLE TO BE IMMEDIATELY STOPPED AND LANE CLOSURE(S) REMOVED IN THE EVENT QUEUES, GREATER THAN 1 MILE, DEVELOP.

NEW YORK STATE OF OPPORTUNITY. Thruway Authority

U.S. CUSTOMARY STANDARD SHEET

LANE CLOSURE CHARTS
1,300 VEHICLES PER HOUR
BUFFALO DIVISION
(SHEET 4 OF 37)

APPROVED SEPTEMBER 1, 2018

/S/ PATRICK THOMPSON, P.E.
DIRECTOR DESIGN SUPPORT SERVICES BUREAU

ISSUED UNDER DB 18-003

TA 619-37

I-90 WESTBOUND INTERCHANGES 48A TO 49 (1,300 VEH/HR/LANE)

LANES REQUIRED TO BE OPEN BY HOUR AND TIME OF DAY

SPRING SEASON MARCH 1 THRU MAY 20

HR/DAY	MON	TUES	WEDS	THUR	FRI	SAT	SUN
0	1	1	1	1	1	1	1
1	1	1	1	1	1	1	1
2	1	1	1	1	1	1	1
3	1	1	1	1	1	1	1
4	1	1	1	1	1	1	1
5	1	1	1	1	1	1	1
6	1	1	1	1	1	1	1
7	2	1	1	1	1	1	1
8	2	2	2	2	1	1	1
9	1	1	1	2	1	1	1
10	1	1	1	2	2	2	1
11	2	1	1	2	2	2	2
12	2	1	1	2	2	2	2
13	2	1	1	2	2	2	2
14	2	1	2	2	2	2	2
15	2	2	2	2	2	2	2
16	2	2	2	2	2	2	2
17	2	2	2	2	2	2	2
18	2	1	2	2	2	1	2
19	1	1	1	1	2	1	2
20	1	1	1	1	1	1	2
21	1	1	1	1	1	1	1
22	1	1	1	1	1	1	1
23	1	1	1	1	1	1	1

SUMMER SEASON MAY 21 THRU SEPTEMBER 15

HR/DAY	MON	TUES	WEDS	THUR	FRI	SAT	SUN
0	1	1	1	1	1	1	1
1	1	1	1	1	1	1	1
2	1	1	1	1	1	1	1
3	1	1	1	1	1	1	1
4	1	1	1	1	1	1	1
5	1	1	1	1	1	1	1
6	1	1	1	1	1	1	1
7	2	1	1	1	1	1	1
8	2	2	2	2	2	1	1
9	2	2	2	2	2	2	1
10	2	2	2	2	2	2	2
11	2	2	2	2	2	2	2
12	2	2	2	2	2	2	2
13	2	2	2	2	2	2	2
14	2	2	2	2	2	2	2
15	2	2	2	2	2	2	2
16	2	2	2	2	2	2	2
17	2	2	2	2	2	2	2
18	2	2	2	2	2	2	2
19	2	1	1	2	2	2	2
20	1	1	1	1	2	1	2
21	1	1	1	1	1	1	2
22	1	1	1	1	1	1	1
23	1	1	1	1	1	1	1

LANES REQUIRED TO BE OPEN BY HOUR AND TIME OF DAY

FALL SEASON SEPTEMBER 16 THRU November 30

HR/DAY	MON	TUES	WEDS	THUR	FRI	SAT	SUN
0	1	1	1	1	1	1	1
1	1	1	1	1	1	1	1
2	1	1	1	1	1	1	1
3	1	1	1	1	1	1	1
4	1	1	1	1	1	1	1
5	1	1	1	1	1	1	1
6	1	1	1	1	1	1	1
7	1	1	1	2	1	1	1
8	1	2	2	2	2	1	1
9	1	1	2	2	2	1	2
10	1	1	2	2	2	2	2
11	2	1	2	2	2	2	2
12	2	1	2	2	2	2	2
13	2	2	2	2	2	2	2
14	2	2	2	2	2	2	2
15	2	2	2	2	2	2	2
16	2	2	2	2	2	2	2
17	2	2	2	2	2	2	2
18	2	2	2	2	2	2	2
19	1	1	1	1	2	1	2
20	1	1	1	1	1	1	2
21	1	1	1	1	1	1	1
22	1	1	1	1	1	1	1
23	1	1	1	1	1	1	1

WINTER SEAS. DECEMBER 1 THRU February 28

HR/DAY	MON	TUES	WEDS	THUR	FRI	SAT	SUN
0	1	1	1	1	1	1	1
1	1	1	1	1	1	1	1
2	1	1	1	1	1	1	1
3	1	1	1	1	1	1	1
4	1	1	1	1	1	1	1
5	1	1	1	1	1	1	1
6	1	1	1	1	1	1	1
7	1	1	1	1	1	1	1
8	1	2	2	2	1	1	1
9	1	1	1	1	1	1	1
10	1	1	1	1	1	1	2
11	1	1	1	1	2	2	2
12	1	1	1	1	2	2	1
13	2	1	1	1	2	2	2
14	2	1	2	2	2	2	2
15	2	2	2	2	2	2	2
16	2	2	2	2	2	2	2
17	2	2	2	2	2	2	1
18	1	1	1	1	2	1	1
19	1	1	1	1	1	1	1
20	1	1	1	1	1	1	1
21	1	1	1	1	1	1	1
22	1	1	1	1	1	1	1
23	1	1	1	1	1	1	1

I-90 EASTBOUND INTERCHANGES 49 TO 48A (1,300 VEH/HR/LANE)

LANES REQUIRED TO BE OPEN BY HOUR AND TIME OF DAY

SPRING SEASON MARCH 1 THRU MAY 20

HR/DAY	MON	TUES	WEDS	THUR	FRI	SAT	SUN
0	1	1	1	1	1	1	1
1	1	1	1	1	1	1	1
2	1	1	1	1	1	1	1
3	1	1	1	1	1	1	1
4	1	1	1	1	1	1	1
5	1	1	1	1	1	1	1
6	1	1	1	1	1	1	1
7	1	1	1	1	1	1	1
8	1	1	1	1	1	1	1
9	1	1	1	1	1	1	1
10	1	1	1	1	1	1	1
11	1	1	1	1	2	2	2
12	1	1	1	1	2	2	2
13	2	1	1	1	2	2	2
14	2	1	1	2	2	2	2
15	2	2	2	2	2	1	2
16	2	2	2	2	2	1	2
17	2	2	2	2	2	1	2
18	1	1	1	1	1	1	2
19	1	1	1	1	1	1	2
20	1	1	1	1	1	1	1
21	1	1	1	1	1	1	1
22	1	1	1	1	1	1	1
23	1	1	1	1	1	1	1

SUMMER SEASON MAY 21 THRU SEPTEMBER 15

HR/DAY	MON	TUES	WEDS	THUR	FRI	SAT	SUN
0	1	1	1	1	1	1	1
1	1	1	1	1	1	1	1
2	1	1	1	1	1	1	1
3	1	1	1	1	1	1	1
4	1	1	1	1	1	1	1
5	1	1	1	1	1	1	1
6	1	1	1	1	1	1	1
7	1	1	1	1	1	1	1
8	1	1	1	1	2	1	1
9	2	1	1	2	2	2	1
10	2	2	2	2	2	2	2
11	2	2	2	2	2	2	2
12	2	2	2	2	2	2	2
13	2	2	2	2	2	2	2
14	2	2	2	2	2	2	2
15	2	2	2	2	2	2	2
16	2	2	2	2	2	2	2
17	2	2	2	2	2	2	2
18	1	1	1	2	2	1	2
19	1	1	1	1	1	1	2
20	1	1	1	1	1	1	1
21	1	1	1	1	1	1	1
22	1	1	1	1	1	1	1
23	1	1	1	1	1	1	1

LANES REQUIRED TO BE OPEN BY HOUR AND TIME OF DAY

FALL SEASON SEPTEMBER 16 THRU November 30

HR/DAY	MON	TUES	WEDS	THUR	FRI	SAT	SUN
0	1	1	1	1	1	1	1
1	1	1	1	1	1	1	1
2	1	1	1	1	1	1	1
3	1	1	1	1	1	1	1
4	1	1	1	1	1	1	1
5	1	1	1	1	1	1	1
6	1	1	1	1	1	1	1
7	1	1	1	1	1	1	1
8	1	1	1	1	1	1	1
9	1	1	1	1	1	1	1
10	1	1	1	1	1	1	1
11	1	1	1	1	1	1	2
12	1	1	1	1	2	1	2
13	1	1	1	1	2	1	2
14	1	2	2	1	2	1	2
15	2	2	2	2	2	1	2
16	2	2	2	2	2	1	2
17	1	2	2	2	2	1	2
18	1	1	1	1	1	1	2
19	1	1	1	1	1	1	2
20	1	1	1	1	1	1	1
21	1	1	1	1	1	1	1
22	1	1	1	1	1	1	1
23	1	1	1	1	1	1	1

WINTER SEAS. DECEMBER 1 THRU February 28

HR/DAY	MON	TUES	WEDS	THUR	FRI	SAT	SUN
0	1	1	1	1	1	1	1
1	1	1	1	1	1	1	1
2	1	1	1	1	1	1	1
3	1	1	1	1	1	1	1
4	1	1	1	1	1	1	1
5	1	1	1	1	1	1	1
6	1	1	1	1	1	1	1
7	1	1	1	1	1	1	1
8	1	1	1	1	1	1	1
9	1	1	1	1	1	1	1
10	1	1	1	1	1	1	1
11	1	1	1	1	1	1	1
12	1	1	1	1	1	1	1
13	1	1	1	1	1	1	2
14	1	1	1	1	2	1	1
15	2	2	2	2	2	1	2
16	2	2	2	2	2	1	2
17	1	1	1	2	2	1	2
18	1	1	1	1	1	1	1
19	1	1	1	1	1	1	1
20	1	1	1	1	1	1	1
21	1	1	1	1	1	1	1
22	1	1	1	1	1	1	1
23	1	1	1	1	1	1	1

NOTES:

1) THE NEW YORK STATE THRUWAY IS A LIMITED ACCESS, HIGH-SPEED, HIGH-VOLUME HIGHWAY. TRAFFIC SHALL BE MAINTAINED IN ACCORDANCE WITH THE *MANUAL ON UNIFORM TRAFFIC CONTROL DEVICES (MUTCD)*, THE *WORK ZONE TRAFFIC CONTROL PLANS*, AND THE *STANDARD SPECIFICATIONS* SECTION 619 AS AMENDED BY THE AUTHORITY.

2) LANE CLOSURES ON THE THRUWAY SHALL ONLY BE ALLOWED IN ACCORDANCE WITH THESE TRAFFIC MANAGEMENT TABLE(S), UNLESS INDICATED OTHERWISE IN THE CONTRACT PLANS OR PROPOSAL DOCUMENTS.

3) LANE CLOSURE CHARTS SHALL APPLY AS FOLLOWS:

- 1,150 VEH/HR/LANE: APPLIES TO ALL WORK REQUIRING LANE CLOSURE(S) EXCEPT AS PERMITTED BELOW.

- 1,300 VEH/HR/LANE: APPLIES TO NON-EVASIVE WORK WHERE WORKERS AND/OR EQUIPMENT ARE LOCATED 4 FT. OR MORE FROM TRAVEL (SPACE) LANE, OR AS APPROVED BY THE THRUWAY PROJECT ENGINEER. WORK SHOULD BE ABLE TO BE IMMEDIATELY STOPPED AND LANE CLOSURE(S) REMOVED IN THE EVENT QUEUES, GREATER THAN 1 MILE, DEVELOP.

NEW YORK STATE OF OPPORTUNITY. Thruway Authority

U.S. CUSTOMARY STANDARD SHEET

LANE CLOSURE CHARTS
1,300 VEHICLES PER HOUR
BUFFALO DIVISION
(SHEET 5 OF 37)

APPROVED SEPTEMBER 1, 2018

/S/ PATRICK THOMPSON, P.E.
DIRECTOR DESIGN SUPPORT SERVICES BUREAU

ISSUED UNDER DB 18-003

TA 619-37

I-90 WESTBOUND INTERCHANGES 49 TO 50 (1,300 VEH/HR/LANE)

LANES REQUIRED TO BE OPEN BY HOUR AND TIME OF DAY

SPRING SEASON MARCH 1 THRU MAY 20

HR/DAY	MON	TUES	WEDS	THUR	FRI	SAT	SUN
0	1	1	1	1	1	1	1
1	1	1	1	1	1	1	1
2	1	1	1	1	1	1	1
3	1	1	1	1	1	1	1
4	1	1	1	1	1	1	1
5	1	1	1	1	1	1	1
6	1	1	1	1	1	1	1
7	2	2	2	2	2	1	1
8	2	2	2	2	2	1	1
9	2	2	2	2	2	2	1
10	2	2	2	2	2	2	2
11	2	2	2	2	2	2	2
12	2	2	2	2	2	2	2
13	2	2	2	2	2	2	2
14	2	2	2	2	2	2	2
15	2	2	2	2	2	2	2
16	2	2	2	2	2	2	2
17	2	2	2	2	2	2	2
18	2	2	2	2	2	2	2
19	2	1	2	2	2	2	2
20	1	1	1	1	2	1	2
21	1	1	1	1	1	1	1
22	1	1	1	1	1	1	1
23	1	1	1	1	1	1	1

SUMMER SEASON MAY 21 THRU SEPTEMBER 15

HR/DAY	MON	TUES	WEDS	THUR	FRI	SAT	SUN
0	1	1	1	1	1	1	1
1	1	1	1	1	1	1	1
2	1	1	1	1	1	1	1
3	1	1	1	1	1	1	1
4	1	1	1	1	1	1	1
5	1	1	1	1	1	1	1
6	2	1	1	1	1	1	1
7	2	2	2	2	2	1	1
8	2	2	2	2	2	1	1
9	2	2	2	2	2	2	2
10	2	2	2	2	2	2	2
11	2	2	2	2	2	2	2
12	2	2	2	2	2	2	2
13	2	2	2	2	2	2	2
14	2	2	2	2	2	2	2
15	2	2	2	2	2	2	2
16	2	2	2	2	2	2	2
17	2	2	2	2	2	2	2
18	2	2	2	2	2	2	2
19	2	2	2	2	2	2	2
20	2	1	2	2	2	2	2
21	1	1	1	1	2	2	2
22	1	1	1	1	1	1	1
23	1	1	1	1	1	1	1

LANES REQUIRED TO BE OPEN BY HOUR AND TIME OF DAY

FALL SEASON SEPTEMBER 16 THRU November 30

HR/DAY	MON	TUES	WEDS	THUR	FRI	SAT	SUN
0	1	1	1	1	1	1	1
1	1	1	1	1	1	1	1
2	1	1	1	1	1	1	1
3	1	1	1	1	1	1	1
4	1	1	1	1	1	1	1
5	1	1	1	1	1	1	1
6	2	2	2	2	2	1	1
7	2	2	2	2	2	1	1
8	2	2	2	2	2	2	2
9	2	2	2	2	2	2	2
10	2	2	2	2	2	2	2
11	2	2	2	2	2	2	2
12	2	2	2	2	2	2	2
13	2	2	2	2	2	2	2
14	2	2	2	2	2	2	2
15	2	2	2	2	2	2	2
16	2	2	2	2	2	2	2
17	2	2	2	2	2	2	2
18	2	2	2	2	2	2	2
19	2	2	2	2	2	2	2
20	1	1	1	2	2	1	2
21	1	1	1	1	1	1	1
22	1	1	1	1	1	1	1
23	1	1	1	1	1	1	1

WINTER SEAS. DECEMBER 1 THRU February 28

HR/DAY	MON	TUES	WEDS	THUR	FRI	SAT	SUN
0	1	1	1	1	1	1	1
1	1	1	1	1	1	1	1
2	1	1	1	1	1	1	1
3	1	1	1	1	1	1	1
4	1	1	1	1	1	1	1
5	1	1	1	1	1	1	1
6	1	2	1	1	1	1	1
7	2	2	2	2	2	1	1
8	2	2	2	2	2	1	1
9	2	2	2	2	2	2	1
10	2	2	2	2	2	2	2
11	2	2	2	2	2	2	2
12	2	2	2	2	2	2	2
13	2	2	2	2	2	2	2
14	2	2	2	2	2	2	2
15	2	2	2	2	2	2	2
16	2	2	2	2	2	2	2
17	2	2	2	2	2	2	2
18	2	2	2	2	2	2	2
19	1	1	1	1	2	1	1
20	1	1	1	1	1	1	1
21	1	1	1	1	1	1	1
22	1	1	1	1	1	1	1
23	1	1	1	1	1	1	1

I-90 EASTBOUND INTERCHANGES 50 TO 49 (1,300 VEH/HR/LANE)

LANES REQUIRED TO BE OPEN BY HOUR AND TIME OF DAY

SPRING SEASON MARCH 1 THRU MAY 20

HR/DAY	MON	TUES	WEDS	THUR	FRI	SAT	SUN
0	1	1	1	1	1	1	1
1	1	1	1	1	1	1	1
2	1	1	1	1	1	1	1
3	1	1	1	1	1	1	1
4	1	1	1	1	1	1	1
5	1	1	1	1	1	1	1
6	1	1	1	1	1	1	1
7	2	2	2	2	2	1	1
8	2	2	2	2	2	2	1
9	2	2	2	2	2	2	2
10	2	2	2	2	2	2	2
11	2	2	2	2	2	2	2
12	2	2	2	2	2	2	2
13	2	2	2	2	2	2	2
14	2	2	2	2	2	2	2
15	2	2	2	2	2	2	2
16	2	2	2	2	2	2	2
17	2	2	2	2	2	2	2
18	2	2	2	2	2	2	2
19	1	1	1	1	2	1	2
20	1	1	1	1	1	1	2
21	1	1	1	1	1	1	1
22	1	1	1	1	1	1	1
23	1	1	1	1	1	1	1

SUMMER SEASON MAY 21 THRU SEPTEMBER 15

HR/DAY	MON	TUES	WEDS	THUR	FRI	SAT	SUN
0	1	1	1	1	1	1	1
1	1	1	1	1	1	1	1
2	1	1	1	1	1	1	1
3	1	1	1	1	1	1	1
4	1	1	1	1	1	1	1
5	1	1	1	1	1	1	1
6	2	2	2	2	2	1	1
7	2	2	2	2	2	2	1
8	2	2	2	2	2	2	2
9	2	2	2	2	2	2	2
10	2	2	2	2	2	2	2
11	2	2	2	2	2	2	2
12	2	2	2	2	2	2	2
13	2	2	2	2	2	2	2
14	2	2	2	2	2	2	2
15	2	2	2	2	2	2	2
16	2	2	2	2	2	2	2
17	2	2	2	2	2	2	2
18	2	2	2	2	2	2	2
19	2	2	2	2	2	2	2
20	1	1	1	2	2	2	2
21	1	1	1	1	1	1	1
22	1	1	1	1	1	1	1
23	1	1	1	1	1	1	1

LANES REQUIRED TO BE OPEN BY HOUR AND TIME OF DAY

FALL SEASON SEPTEMBER 16 THRU November 30

HR/DAY	MON	TUES	WEDS	THUR	FRI	SAT	SUN
0	1	1	1	1	1	1	1
1	1	1	1	1	1	1	1
2	1	1	1	1	1	1	1
3	1	1	1	1	1	1	1
4	1	1	1	1	1	1	1
5	1	1	1	1	1	1	1
6	2	2	2	2	2	1	1
7	2	2	2	2	2	1	1
8	2	2	2	2	2	2	1
9	2	2	2	2	2	2	2
10	2	2	2	2	2	2	2
11	2	2	2	2	2	2	2
12	2	2	2	2	2	2	2
13	2	2	2	2	2	2	2
14	2	2	2	2	2	2	2
15	2	2	2	2	2	2	2
16	2	2	2	2	2	2	2
17	2	2	2	2	2	2	2
18	2	2	2	2	2	2	2
19	1	1	1	2	2	1	2
20	1	1	1	1	1	1	1
21	1	1	1	1	1	1	1
22	1	1	1	1	1	1	1
23	1	1	1	1	1	1	1

WINTER SEAS. DECEMBER 1 THRU February 28

HR/DAY	MON	TUES	WEDS	THUR	FRI	SAT	SUN
0	1	1	1	1	1	1	1
1	1	1	1	1	1	1	1
2	1	1	1	1	1	1	1
3	1	1	1	1	1	1	1
4	1	1	1	1	1	1	1
5	1	1	1	1	1	1	1
6	1	1	1	1	1	1	1
7	2	2	2	2	2	1	1
8	2	2	2	2	2	1	1
9	2	2	2	2	2	2	1
10	2	2	2	2	2	2	2
11	2	2	2	2	2	2	2
12	2	2	2	2	2	2	2
13	2	2	2	2	2	2	2
14	2	2	2	2	2	2	2
15	2	2	2	2	2	2	2
16	2	2	2	2	2	2	2
17	2	2	2	2	2	2	2
18	2	2	2	2	2	2	2
19	1	1	1	1	1	1	1
20	1	1	1	1	1	1	1
21	1	1	1	1	1	1	1
22	1	1	1	1	1	1	1
23	1	1	1	1	1	1	1

NOTES:

1) THE NEW YORK STATE THRUWAY IS A LIMITED ACCESS, HIGH-SPEED, HIGH-VOLUME HIGHWAY. TRAFFIC SHALL BE MAINTAINED IN ACCORDANCE WITH THE *MANUAL ON UNIFORM TRAFFIC CONTROL DEVICES (MUTCD)*, THE *WORK ZONE TRAFFIC CONTROL PLANS*, AND THE *STANDARD SPECIFICATIONS* SECTION 619 AS AMENDED BY THE AUTHORITY.

2) LANE CLOSURES ON THE THRUWAY SHALL ONLY BE ALLOWED IN ACCORDANCE WITH THESE TRAFFIC MANAGEMENT TABLE(S), UNLESS INDICATED OTHERWISE IN THE CONTRACT PLANS OR PROPOSAL DOCUMENTS.

3) LANE CLOSURE CHARTS SHALL APPLY AS FOLLOWS:

- 1,150 VEH/HR/LANE: APPLIES TO ALL WORK REQUIRING LANE CLOSURE(S) EXCEPT AS PERMITTED BELOW.

- 1,300 VEH/HR/LANE: APPLIES TO NON-EVASIVE WORK WHERE WORKERS AND/OR EQUIPMENT ARE LOCATED 4 FT. OR MORE FROM TRAVEL (SPACE) LANE, OR AS APPROVED BY THE THRUWAY PROJECT ENGINEER. WORK SHOULD BE ABLE TO BE IMMEDIATELY STOPPED AND LANE CLOSURE(S) REMOVED IN THE EVENT QUEUES, GREATER THAN 1 MILE, DEVELOP.

NEW YORK STATE OF OPPORTUNITY. Thruway Authority

U.S. CUSTOMARY STANDARD SHEET

LANE CLOSURE CHARTS
1,300 VEHICLES PER HOUR
BUFFALO DIVISION
(SHEET 6 OF 37)

APPROVED SEPTEMBER 1, 2018

/S/ PATRICK THOMPSON, P.E.
DIRECTOR DESIGN SUPPORT SERVICES BUREAU

ISSUED UNDER DB 18-003

TA 619-37

I-90 WESTBOUND INTERCHANGES 50 TO 50A (1,300 VEH/HR/LANE)

LANES REQUIRED TO BE OPEN BY HOUR AND TIME OF DAY

SPRING SEASON MARCH 1 THRU MAY 20

HR/DAY	MON	TUES	WEDS	THUR	FRI	SAT	SUN
0	1	1	1	1	1	1	1
1	1	1	1	1	1	1	1
2	1	1	1	1	1	1	1
3	1	1	1	1	1	1	1
4	1	1	1	1	1	1	1
5	2	2	2	2	2	1	1
6	3	3	3	3	3	1	1
7	3	3	3	3	3	2	1
8	3	3	3	3	3	3	2
9	3	3	3	3	3	3	2
10	3	3	3	3	3	3	3
11	3	3	3	3	3	3	3
12	3	3	3	3	3	3	3
13	3	3	3	3	3	3	3
14	3	3	3	3	3	3	3
15	3	3	3	3	3	3	3
16	3	3	3	3	3	3	3
17	3	3	3	3	3	3	3
18	3	3	3	3	3	3	3
19	3	3	3	3	3	3	3
20	2	2	3	3	3	2	2
21	2	2	2	2	2	2	2
22	2	2	2	2	2	2	1
23	1	1	1	1	2	2	1

SUMMER SEASON MAY 21 THRU SEPTEMBER 15

HR/DAY	MON	TUES	WEDS	THUR	FRI	SAT	SUN
0	1	1	1	1	1	1	1
1	1	1	1	1	1	1	1
2	1	1	1	1	1	1	1
3	1	1	1	1	1	1	1
4	1	1	1	1	1	1	1
5	2	2	2	2	2	1	1
6	3	3	3	3	3	2	1
7	3	3	3	3	3	2	2
8	3	3	3	3	3	3	2
9	3	3	3	3	3	3	3
10	3	3	3	3	3	3	3
11	3	3	3	3	3	3	3
12	3	3	3	3	3	3	3
13	3	3	3	3	3	3	3
14	3	3	3	3	3	3	3
15	3	3	3	3	3	3	3
16	3	3	3	3	3	3	3
17	3	3	3	3	3	3	3
18	3	3	3	3	3	3	3
19	3	3	3	3	3	3	3
20	3	3	3	3	3	2	2
21	2	2	3	2	2	2	2
22	2	2	2	2	2	2	2
23	1	1	1	1	2	2	1

LANES REQUIRED TO BE OPEN BY HOUR AND TIME OF DAY

FALL SEASON SEPTEMBER 16 THRU November 30

HR/DAY	MON	TUES	WEDS	THUR	FRI	SAT	SUN
0	1	1	1	1	1	1	1
1	1	1	1	1	1	1	1
2	1	1	1	1	1	1	1
3	1	1	1	1	1	1	1
4	1	1	1	1	1	1	1
5	2	2	2	2	2	1	1
6	3	3	3	3	3	2	1
7	3	3	3	3	3	2	2
8	3	3	3	3	3	3	3
9	3	3	3	3	3	3	3
10	3	3	3	3	3	3	3
11	3	3	3	3	3	3	3
12	3	3	3	3	3	3	3
13	3	3	3	3	3	3	3
14	3	3	3	3	3	3	3
15	3	3	3	3	3	3	3
16	3	3	3	3	3	3	3
17	3	3	3	3	3	3	3
18	3	3	3	3	3	3	3
19	3	3	3	3	3	3	2
20	2	2	2	3	3	2	2
21	2	2	2	2	2	2	2
22	2	2	2	2	2	2	1
23	1	1	1	1	2	2	1

WINTER SEAS. DECEMBER 1 THRU February 28

HR/DAY	MON	TUES	WEDS	THUR	FRI	SAT	SUN
0	1	1	1	1	1	1	1
1	1	1	1	1	1	1	1
2	1	1	1	1	1	1	1
3	1	1	1	1	1	1	1
4	1	1	1	1	1	1	1
5	2	2	2	2	1	1	1
6	3	3	3	3	3	1	1
7	3	3	3	3	3	2	1
8	3	3	3	3	3	2	2
9	3	3	3	3	3	3	3
10	3	3	3	3	3	3	3
11	3	3	3	3	3	3	3
12	3	3	3	3	3	3	3
13	3	3	3	3	3	3	3
14	3	3	3	3	3	3	3
15	3	3	3	3	3	3	3
16	3	3	3	3	3	3	3
17	3	3	3	3	3	3	3
18	3	3	3	3	3	3	3
19	3	3	3	3	3	3	2
20	2	2	2	2	2	2	2
21	2	2	2	2	2	2	2
22	2	2	2	2	2	2	2
23	1	1	1	1	2	2	1

I-90 EASTBOUND INTERCHANGES 50A TO 50 (1,300 VEH/HR/LANE)

LANES REQUIRED TO BE OPEN BY HOUR AND TIME OF DAY

SPRING SEASON MARCH 1 THRU MAY 20

HR/DAY	MON	TUES	WEDS	THUR	FRI	SAT	SUN
0	1	1	1	1	1	1	1
1	1	1	1	1	1	1	1
2	1	1	1	1	1	1	1
3	1	1	1	1	1	1	1
4	1	1	1	1	1	1	1
5	1	1	1	1	1	1	1
6	3	3	3	3	3	1	1
7	3	3	3	3	3	2	1
8	3	3	3	3	3	2	2
9	3	3	3	3	3	3	2
10	3	3	3	3	3	3	2
11	3	3	3	3	3	3	3
12	3	3	3	3	3	3	3
13	3	3	3	3	3	3	3
14	3	3	3	3	3	3	3
15	3	3	3	3	3	3	3
16	3	3	3	3	3	3	3
17	3	3	3	3	3	3	3
18	3	3	3	3	3	3	3
19	2	3	3	3	3	3	3
20	2	2	2	2	2	2	2
21	2	2	2	2	2	2	2
22	2	2	2	2	2	2	1
23	1	1	1	1	2	2	1

SUMMER SEASON MAY 21 THRU SEPTEMBER 15

HR/DAY	MON	TUES	WEDS	THUR	FRI	SAT	SUN
0	1	1	1	1	1	1	1
1	1	1	1	1	1	1	1
2	1	1	1	1	1	1	1
3	1	1	1	1	1	1	1
4	1	1	1	1	1	1	1
5	1	1	1	1	1	1	1
6	3	3	3	3	3	1	1
7	3	3	3	3	3	2	1
8	3	3	3	3	3	2	2
9	3	3	3	3	3	2	2
10	3	3	3	3	3	3	2
11	3	3	3	3	3	3	3
12	3	3	3	3	3	3	3
13	3	3	3	3	3	3	3
14	3	3	3	3	3	3	3
15	3	3	3	3	3	3	3
16	3	3	3	3	3	3	3
17	3	3	3	3	3	3	3
18	3	3	3	3	3	3	3
19	2	3	3	3	3	2	3
20	2	2	2	2	2	2	2
21	2	2	2	2	2	2	2
22	2	2	2	2	2	2	2
23	1	1	1	2	2	2	1

LANES REQUIRED TO BE OPEN BY HOUR AND TIME OF DAY

FALL SEASON SEPTEMBER 16 THRU November 30

HR/DAY	MON	TUES	WEDS	THUR	FRI	SAT	SUN
0	1	1	1	1	1	1	1
1	1	1	1	1	1	1	1
2	1	1	1	1	1	1	1
3	1	1	1	1	1	1	1
4	1	1	1	1	1	1	1
5	1	1	1	1	1	1	1
6	3	3	3	3	3	1	1
7	3	3	3	3	3	2	1
8	3	3	3	3	3	2	2
9	3	3	3	3	3	2	2
10	3	3	3	3	3	3	2
11	3	3	3	3	3	3	3
12	3	3	3	3	3	3	3
13	3	3	3	3	3	3	3
14	3	3	3	3	3	3	3
15	3	3	3	3	3	3	3
16	3	3	3	3	3	3	3
17	3	3	3	3	3	3	3
18	3	3	3	3	3	3	3
19	2	3	3	3	3	2	3
20	2	2	2	2	2	2	2
21	2	2	2	2	2	2	2
22	2	2	2	2	2	2	1
23	1	1	1	1	2	2	1

WINTER SEAS. DECEMBER 1 THRU February 28

HR/DAY	MON	TUES	WEDS	THUR	FRI	SAT	SUN
0	1	1	1	1	1	1	1
1	1	1	1	1	1	1	1
2	1	1	1	1	1	1	1
3	1	1	1	1	1	1	1
4	1	1	1	1	1	1	1
5	1	1	1	1	1	1	1
6	3	3	3	3	3	1	1
7	3	3	3	3	3	2	1
8	3	3	3	3	3	2	1
9	3	3	3	3	3	2	2
10	3	3	3	3	3	2	2
11	3	3	3	3	3	3	2
12	3	3	3	3	3	3	3
13	3	3	3	3	3	3	3
14	3	3	3	3	3	3	3
15	3	3	3	3	3	3	3
16	3	3	3	3	3	3	3
17	3	3	3	3	3	3	3
18	3	3	3	3	3	3	3
19	2	2	3	3	2	2	2
20	2	2	2	2	2	2	2
21	2	2	2	2	2	2	2
22	2	2	2	2	2	2	2
23	1	1	1	1	2	2	1

NOTES:

1) THE NEW YORK STATE THRUWAY IS A LIMITED ACCESS, HIGH-SPEED, HIGH-VOLUME HIGHWAY. TRAFFIC SHALL BE MAINTAINED IN ACCORDANCE WITH THE *MANUAL ON UNIFORM TRAFFIC CONTROL DEVICES (MUTCD)*, THE *WORK ZONE TRAFFIC CONTROL PLANS*, AND THE *STANDARD SPECIFICATIONS* SECTION 619 AS AMENDED BY THE AUTHORITY.

2) LANE CLOSURES ON THE THRUWAY SHALL ONLY BE ALLOWED IN ACCORDANCE WITH THESE TRAFFIC MANAGEMENT TABLE(S), UNLESS INDICATED OTHERWISE IN THE CONTRACT PLANS OR PROPOSAL DOCUMENTS.

3) LANE CLOSURE CHARTS SHALL APPLY AS FOLLOWS:

- 1,150 VEH/HR/LANE: APPLIES TO ALL WORK REQUIRING LANE CLOSURE(S) EXCEPT AS PERMITTED BELOW.

- 1,300 VEH/HR/LANE: APPLIES TO NON-EVASIVE WORK WHERE WORKERS AND/OR EQUIPMENT ARE LOCATED 4 FT. OR MORE FROM TRAVEL (SPACE) LANE, OR AS APPROVED BY THE THRUWAY PROJECT ENGINEER. WORK SHOULD BE ABLE TO BE IMMEDIATELY STOPPED AND LANE CLOSURE(S) REMOVED IN THE EVENT QUEUES, GREATER THAN 1 MILE, DEVELOP.

NEW YORK STATE OF OPPORTUNITY. Thruway Authority

U.S. CUSTOMARY STANDARD SHEET

LANE CLOSURE CHARTS
1,300 VEHICLES PER HOUR
BUFFALO DIVISION
(SHEET 7 OF 37)

APPROVED SEPTEMBER 1, 2018

/S/ PATRICK THOMPSON, P.E.
DIRECTOR DESIGN SUPPORT SERVICES BUREAU

ISSUED UNDER DB 18-003

TA 619-37

I-90 WESTBOUND INTERCHANGES 50A TO 51 (1,300 VEH/HR/LANE)

LANES REQUIRED TO BE OPEN BY HOUR AND TIME OF DAY

SPRING SEASON MARCH 1 THRU MAY 20

HR/DAY	MON	TUES	WEDS	THUR	FRI	SAT	SUN
0	1	1	1	1	1	1	1
1	1	1	1	1	1	1	1
2	1	1	1	1	1	1	1
3	1	1	1	1	1	1	1
4	1	1	1	1	1	1	1
5	2	2	2	2	2	1	1
6	3	3	3	3	3	2	1
7	3	3	3	3	3	2	1
8	3	3	3	3	3	3	2
9	3	3	3	3	3	3	2
10	3	3	3	3	3	3	3
11	3	3	3	3	3	3	3
12	3	3	3	3	3	3	3
13	3	3	3	3	3	3	3
14	3	3	3	3	3	3	3
15	3	3	3	3	3	3	3
16	3	3	3	3	3	3	3
17	3	3	3	3	3	3	3
18	3	3	3	3	3	3	3
19	3	3	3	3	3	3	3
20	2	2	3	3	2	2	2
21	2	2	2	2	2	2	2
22	2	2	2	2	2	2	1
23	1	1	1	1	2	2	1

SUMMER SEASON MAY 21 THRU SEPTEMBER 15

HR/DAY	MON	TUES	WEDS	THUR	FRI	SAT	SUN
0	1	1	1	1	1	1	1
1	1	1	1	1	1	1	1
2	1	1	1	1	1	1	1
3	1	1	1	1	1	1	1
4	1	1	1	1	1	1	1
5	2	2	2	2	2	1	1
6	3	3	3	3	3	2	1
7	3	3	3	3	3	2	1
8	3	3	3	3	3	3	2
9	3	3	3	3	3	3	3
10	3	3	3	3	3	3	3
11	3	3	3	3	3	3	3
12	3	3	3	3	3	3	3
13	3	3	3	3	3	3	3
14	3	3	3	3	3	3	3
15	3	3	3	3	3	3	3
16	3	3	3	3	3	3	3
17	3	3	3	3	3	3	3
18	3	3	3	3	3	3	3
19	3	3	3	3	3	3	3
20	2	3	3	3	3	2	2
21	2	2	3	3	2	2	2
22	2	2	2	2	2	2	2
23	1	1	2	2	2	2	1

LANES REQUIRED TO BE OPEN BY HOUR AND TIME OF DAY

FALL SEASON SEPTEMBER 16 THRU November 30

HR/DAY	MON	TUES	WEDS	THUR	FRI	SAT	SUN
0	1	1	1	1	1	1	1
1	1	1	1	1	1	1	1
2	1	1	1	1	1	1	1
3	1	1	1	1	1	1	1
4	1	1	1	1	1	1	1
5	2	2	2	2	2	1	1
6	3	3	3	3	3	2	1
7	3	3	3	3	3	2	2
8	3	3	3	3	3	3	3
9	3	3	3	3	3	3	3
10	3	3	3	3	3	3	3
11	3	3	3	3	3	3	3
12	3	3	3	3	3	3	3
13	3	3	3	3	3	3	3
14	3	3	3	3	3	3	3
15	3	3	3	3	3	3	3
16	3	3	3	3	3	3	3
17	3	3	3	3	3	3	3
18	3	3	3	3	3	3	3
19	3	3	3	3	3	3	2
20	2	2	2	3	3	2	2
21	2	2	2	2	2	2	2
22	2	2	2	2	2	2	1
23	1	1	1	1	2	2	1

WINTER SEAS. DECEMBER 1 THRU February 28

HR/DAY	MON	TUES	WEDS	THUR	FRI	SAT	SUN
0	1	1	1	1	1	1	1
1	1	1	1	1	1	1	1
2	1	1	1	1	1	1	1
3	1	1	1	1	1	1	1
4	1	1	1	1	1	1	1
5	2	2	2	2	1	1	1
6	3	3	3	3	3	1	1
7	3	3	3	3	3	2	1
8	3	3	3	3	3	2	2
9	3	3	3	3	3	3	3
10	3	3	3	3	3	3	3
11	3	3	3	3	3	3	3
12	3	3	3	3	3	3	3
13	3	3	3	3	3	3	3
14	3	3	3	3	3	3	3
15	3	3	3	3	3	3	3
16	3	3	3	3	3	3	3
17	3	3	3	3	3	3	3
18	3	3	3	3	3	3	2
19	3	3	3	3	3	3	2
20	2	2	2	3	2	2	2
21	2	2	2	2	2	2	2
22	2	2	2	2	2	2	2
23	1	1	1	1	2	2	1

I-90 EASTBOUND INTERCHANGES 51 TO 50A (1,300 VEH/HR/LANE)

LANES REQUIRED TO BE OPEN BY HOUR AND TIME OF DAY

SPRING SEASON MARCH 1 THRU MAY 20

HR/DAY	MON	TUES	WEDS	THUR	FRI	SAT	SUN
0	1	1	1	1	1	1	1
1	1	1	1	1	1	1	1
2	1	1	1	1	1	1	1
3	1	1	1	1	1	1	1
4	1	1	1	1	1	1	1
5	2	1	1	1	1	1	1
6	3	3	3	3	3	1	1
7	3	3	3	3	3	2	1
8	3	3	3	3	3	3	2
9	3	3	3	3	3	3	2
10	3	3	3	3	3	3	3
11	3	3	3	3	3	3	3
12	3	3	3	3	3	3	3
13	3	3	3	3	3	3	3
14	3	3	3	3	3	3	3
15	3	3	3	3	3	3	3
16	3	3	3	3	3	3	3
17	3	3	3	3	3	3	3
18	3	3	3	3	3	3	3
19	3	3	3	3	3	3	3
20	2	2	3	3	2	2	3
21	2	2	2	2	2	3	2
22	2	2	2	2	2	2	2
23	1	1	1	1	2	2	1

SUMMER SEASON MAY 21 THRU SEPTEMBER 15

HR/DAY	MON	TUES	WEDS	THUR	FRI	SAT	SUN
0	1	1	1	1	1	1	1
1	1	1	1	1	1	1	1
2	1	1	1	1	1	1	1
3	1	1	1	1	1	1	1
4	1	1	1	1	1	1	1
5	2	2	2	2	2	1	1
6	3	3	3	3	3	2	1
7	3	3	3	3	3	2	1
8	3	3	3	3	3	3	2
9	3	3	3	3	3	3	2
10	3	3	3	3	3	3	3
11	3	3	3	3	3	3	3
12	3	3	3	3	3	3	3
13	3	3	3	3	3	3	3
14	3	3	3	3	3	3	3
15	3	3	3	3	3	3	3
16	3	3	3	3	3	3	3
17	3	3	3	3	3	3	3
18	3	3	3	3	3	3	3
19	3	3	3	3	3	3	3
20	2	3	3	3	3	3	3
21	2	2	2	3	3	3	2
22	2	2	2	2	2	2	2
23	1	1	2	2	2	2	1

LANES REQUIRED TO BE OPEN BY HOUR AND TIME OF DAY

FALL SEASON SEPTEMBER 16 THRU November 30

HR/DAY	MON	TUES	WEDS	THUR	FRI	SAT	SUN
0	1	1	1	1	2	1	1
1	1	1	1	1	1	1	1
2	1	1	1	1	1	1	1
3	1	1	1	1	1	1	1
4	1	1	1	1	1	1	1
5	1	1	1	2	1	1	1
6	3	3	3	3	3	1	1
7	3	3	3	3	3	2	1
8	3	3	3	3	3	3	2
9	3	3	3	3	3	3	2
10	3	3	3	3	3	3	3
11	3	3	3	3	3	3	3
12	3	3	3	3	3	3	3
13	3	3	3	3	3	3	3
14	3	3	3	3	3	3	3
15	3	3	3	3	3	3	3
16	3	3	3	3	3	3	3
17	3	3	3	3	3	3	3
18	3	3	3	3	3	3	3
19	3	3	3	3	3	3	3
20	2	2	2	3	2	2	2
21	2	2	2	2	3	2	2
22	2	2	2	2	2	2	1
23	1	1	1	2	2	2	1

WINTER SEAS. DECEMBER 1 THRU February 28

HR/DAY	MON	TUES	WEDS	THUR	FRI	SAT	SUN
0	1	1	1	1	1	1	1
1	1	1	1	1	1	1	1
2	1	1	1	1	1	1	1
3	1	1	1	1	1	1	1
4	1	1	1	1	1	1	1
5	1	2	1	1	1	1	1
6	3	3	3	3	3	1	1
7	3	3	3	3	3	2	1
8	3	3	3	3	3	2	1
9	3	3	3	3	3	3	2
10	3	3	3	3	3	3	2
11	3	3	3	3	3	3	3
12	3	3	3	3	3	3	3
13	3	3	3	3	3	3	3
14	3	3	3	3	3	3	3
15	3	3	3	3	3	3	3
16	3	3	3	3	3	3	3
17	3	3	3	3	3	3	3
18	3	3	3	3	3	3	3
19	3	3	3	3	3	3	3
20	2	2	2	2	2	2	2
21	2	2	2	2	2	2	2
22	2	2	2	2	2	2	2
23	1	1	1	1	2	2	1

NOTES:

1) THE NEW YORK STATE THRUWAY IS A LIMITED ACCESS, HIGH-SPEED, HIGH-VOLUME HIGHWAY. TRAFFIC SHALL BE MAINTAINED IN ACCORDANCE WITH THE *MANUAL ON UNIFORM TRAFFIC CONTROL DEVICES (MUTCD)*, THE *WORK ZONE TRAFFIC CONTROL PLANS*, AND THE *STANDARD SPECIFICATIONS* SECTION 619 AS AMENDED BY THE AUTHORITY.

2) LANE CLOSURES ON THE THRUWAY SHALL ONLY BE ALLOWED IN ACCORDANCE WITH THESE TRAFFIC MANAGEMENT TABLE(S), UNLESS INDICATED OTHERWISE IN THE CONTRACT PLANS OR PROPOSAL DOCUMENTS.

3) LANE CLOSURE CHARTS SHALL APPLY AS FOLLOWS:

- 1,150 VEH/HR/LANE: APPLIES TO ALL WORK REQUIRING LANE CLOSURE(S) EXCEPT AS PERMITTED BELOW.

- 1,300 VEH/HR/LANE: APPLIES TO NON-EVASIVE WORK WHERE WORKERS AND/OR EQUIPMENT ARE LOCATED 4 FT. OR MORE FROM TRAVEL (SPACE) LANE, OR AS APPROVED BY THE THRUWAY PROJECT ENGINEER. WORK SHOULD BE ABLE TO BE IMMEDIATELY STOPPED AND LANE CLOSURE(S) REMOVED IN THE EVENT QUEUES, GREATER THAN 1 MILE, DEVELOP.

NEW YORK STATE OF OPPORTUNITY. Thruway Authority

U.S. CUSTOMARY STANDARD SHEET

LANE CLOSURE CHARTS
1,300 VEHICLES PER HOUR
BUFFALO DIVISION
(SHEET 8 OF 37)

APPROVED SEPTEMBER 1, 2018

/S/ PATRICK THOMPSON, P.E.
DIRECTOR DESIGN SUPPORT SERVICES BUREAU

ISSUED UNDER DB 18-003

TA 619-37

I-90 WESTBOUND INTERCHANGES 51 TO 52 (1,300 VEH/HR/LANE)

LANES REQUIRED TO BE OPEN BY HOUR AND TIME OF DAY

SPRING SEASON MARCH 1 THRU MAY 20

HR/DAY	MON	TUES	WEDS	THUR	FRI	SAT	SUN
0	1	1	1	1	1	1	1
1	1	1	1	1	1	1	1
2	1	1	1	1	1	1	1
3	1	1	1	1	1	1	1
4	1	1	1	1	1	1	1
5	1	1	1	1	1	1	1
6	3	3	3	3	3	1	1
7	3	3	3	3	3	2	1
8	3	3	3	3	3	3	2
9	3	3	3	3	3	3	2
10	3	3	3	3	3	3	3
11	3	3	3	3	3	3	3
12	3	3	3	3	3	3	3
13	3	3	3	3	3	3	3
14	3	3	3	3	3	3	3
15	3	3	3	3	3	3	3
16	3	3	3	3	3	3	3
17	3	3	3	3	3	3	3
18	3	3	3	3	3	3	3
19	3	3	3	3	3	3	2
20	2	3	3	3	3	2	2
21	2	2	2	2	2	2	2
22	2	2	2	2	2	2	1
23	1	1	1	1	2	1	1

SUMMER SEASON MAY 21 THRU SEPTEMBER 15

HR/DAY	MON	TUES	WEDS	THUR	FRI	SAT	SUN
0	1	1	1	1	1	1	1
1	1	1	1	1	1	1	1
2	1	1	1	1	1	1	1
3	1	1	1	1	1	1	1
4	1	1	1	1	1	1	1
5	2	2	2	2	1	1	1
6	3	3	3	3	3	1	1
7	3	3	3	3	3	2	2
8	3	3	3	3	3	3	2
9	3	3	3	3	3	3	3
10	3	3	3	3	3	3	3
11	3	3	3	3	3	3	3
12	3	3	3	3	3	3	3
13	3	3	3	3	3	3	3
14	3	3	3	3	3	3	3
15	3	3	3	3	3	3	3
16	3	3	3	3	3	3	3
17	3	3	3	3	3	3	3
18	3	3	3	3	3	3	3
19	3	3	3	3	3	3	2
20	3	3	3	3	3	2	2
21	2	2	3	3	2	2	2
22	2	2	2	2	2	2	2
23	1	1	2	2	2	2	1

LANES REQUIRED TO BE OPEN BY HOUR AND TIME OF DAY

FALL SEASON SEPTEMBER 16 THRU November 30

HR/DAY	MON	TUES	WEDS	THUR	FRI	SAT	SUN
0	1	1	1	1	1	1	1
1	1	1	1	1	1	1	1
2	1	1	1	1	1	1	1
3	1	1	1	1	1	1	1
4	1	1	1	1	1	1	1
5	1	1	1	2	1	1	1
6	3	3	3	3	3	1	1
7	3	3	3	3	3	2	2
8	3	3	3	3	3	3	3
9	3	3	3	3	3	3	3
10	3	3	3	3	3	3	3
11	3	3	3	3	3	3	3
12	3	3	3	3	3	3	3
13	3	3	3	3	3	3	3
14	3	3	3	3	3	3	3
15	3	3	3	3	3	3	3
16	3	3	3	3	3	3	3
17	3	3	3	3	3	3	3
18	3	3	3	3	3	3	3
19	3	3	3	3	3	3	2
20	2	3	3	3	3	2	2
21	2	2	2	2	2	2	2
22	2	2	2	2	2	2	1
23	1	1	1	2	2	2	1

WINTER SEAS. DECEMBER 1 THRU February 28

HR/DAY	MON	TUES	WEDS	THUR	FRI	SAT	SUN
0	1	1	1	1	1	1	1
1	1	1	1	1	1	1	1
2	1	1	1	1	1	1	1
3	1	1	1	1	1	1	1
4	1	1	1	1	1	1	1
5	1	1	1	1	1	1	1
6	3	3	3	3	3	1	1
7	3	3	3	3	3	2	1
8	3	3	3	3	3	2	2
9	3	3	3	3	3	3	3
10	3	3	3	3	3	3	3
11	3	3	3	3	3	3	3
12	3	3	3	3	3	3	3
13	3	3	3	3	3	3	3
14	3	3	3	3	3	3	3
15	3	3	3	3	3	3	3
16	3	3	3	3	3	3	3
17	3	3	3	3	3	3	3
18	3	3	3	3	3	3	2
19	3	3	3	3	3	3	2
20	2	2	3	3	2	2	2
21	2	2	2	2	2	2	2
22	2	2	2	2	2	2	2
23	1	1	1	1	2	1	1

I-90 EASTBOUND INTERCHANGES 52 TO 51 (1,300 VEH/HR/LANE)

LANES REQUIRED TO BE OPEN BY HOUR AND TIME OF DAY

SPRING SEASON MARCH 1 THRU MAY 20

HR/DAY	MON	TUES	WEDS	THUR	FRI	SAT	SUN
0	1	1	1	1	1	1	1
1	1	1	1	1	1	1	1
2	1	1	1	1	1	1	1
3	1	1	1	1	1	1	1
4	1	1	1	1	1	1	1
5	2	2	2	2	2	1	1
6	3	3	3	3	3	1	1
7	3	3	3	3	3	2	1
8	3	3	3	3	3	3	2
9	3	3	3	3	3	3	2
10	3	3	3	3	3	3	3
11	3	3	3	3	3	3	3
12	3	3	3	3	3	3	3
13	3	3	3	3	3	3	3
14	3	3	3	3	3	3	3
15	3	3	3	3	3	3	3
16	3	3	3	3	3	3	3
17	3	3	3	3	3	3	3
18	3	3	3	3	3	3	3
19	3	3	3	3	3	3	3
20	2	2	3	2	2	2	3
21	2	2	2	2	2	3	2
22	2	2	2	2	2	2	2
23	1	1	1	1	2	2	1

SUMMER SEASON MAY 21 THRU SEPTEMBER 15

HR/DAY	MON	TUES	WEDS	THUR	FRI	SAT	SUN
0	1	1	1	1	1	1	1
1	1	1	1	1	1	1	1
2	1	1	1	1	1	1	1
3	1	1	1	1	1	1	1
4	1	1	1	1	1	1	1
5	2	2	2	2	2	1	1
6	3	3	3	3	3	2	1
7	3	3	3	3	3	2	1
8	3	3	3	3	3	2	2
9	3	3	3	3	3	3	2
10	3	3	3	3	3	3	3
11	3	3	3	3	3	3	3
12	3	3	3	3	3	3	3
13	3	3	3	3	3	3	3
14	3	3	3	3	3	3	3
15	3	3	3	3	3	3	3
16	3	3	3	3	3	3	3
17	3	3	3	3	3	3	3
18	3	3	3	3	3	3	3
19	3	3	3	3	3	3	3
20	2	2	3	3	3	3	3
21	2	2	2	3	3	3	2
22	2	2	2	2	3	3	2
23	1	1	2	2	2	2	1

LANES REQUIRED TO BE OPEN BY HOUR AND TIME OF DAY

FALL SEASON SEPTEMBER 16 THRU November 30

HR/DAY	MON	TUES	WEDS	THUR	FRI	SAT	SUN
0	1	1	1	1	2	1	1
1	1	1	1	1	1	1	1
2	1	1	1	1	1	1	1
3	1	1	1	1	1	1	1
4	1	1	1	1	1	1	1
5	2	2	2	2	2	1	1
6	3	3	3	3	3	1	1
7	3	3	3	3	3	2	1
8	3	3	3	3	3	2	2
9	3	3	3	3	3	3	2
10	3	3	3	3	3	3	3
11	3	3	3	3	3	3	3
12	3	3	3	3	3	3	3
13	3	3	3	3	3	3	3
14	3	3	3	3	3	3	3
15	3	3	3	3	3	3	3
16	3	3	3	3	3	3	3
17	3	3	3	3	3	3	3
18	3	3	3	3	3	3	3
19	2	3	3	3	3	3	3
20	2	2	2	2	2	2	2
21	2	2	2	2	2	2	2
22	2	2	2	2	2	2	1
23	1	1	1	2	2	2	1

WINTER SEAS. DECEMBER 1 THRU February 28

HR/DAY	MON	TUES	WEDS	THUR	FRI	SAT	SUN
0	1	1	1	1	1	1	1
1	1	1	1	1	1	1	1
2	1	1	1	1	1	1	1
3	1	1	1	1	1	1	1
4	1	1	1	1	1	1	1
5	2	2	2	2	1	1	1
6	3	3	3	3	3	1	1
7	3	3	3	3	3	2	1
8	3	3	3	3	3	2	1
9	3	3	3	3	3	2	2
10	3	3	3	3	3	3	2
11	3	3	3	3	3	3	3
12	3	3	3	3	3	3	3
13	3	3	3	3	3	3	3
14	3	3	3	3	3	3	3
15	3	3	3	3	3	3	3
16	3	3	3	3	3	3	3
17	3	3	3	3	3	3	3
18	3	3	3	3	3	3	3
19	2	2	3	3	3	3	3
20	2	2	2	2	2	2	2
21	2	2	2	2	2	2	2
22	2	2	2	2	2	2	2
23	1	1	1	1	2	2	1

NOTES:

1) THE NEW YORK STATE THRUWAY IS A LIMITED ACCESS, HIGH-SPEED, HIGH-VOLUME HIGHWAY. TRAFFIC SHALL BE MAINTAINED IN ACCORDANCE WITH THE *MANUAL ON UNIFORM TRAFFIC CONTROL DEVICES (MUTCD)*, THE *WORK ZONE TRAFFIC CONTROL PLANS*, AND THE *STANDARD SPECIFICATIONS* SECTION 619 AS AMENDED BY THE AUTHORITY.

2) LANE CLOSURES ON THE THRUWAY SHALL ONLY BE ALLOWED IN ACCORDANCE WITH THESE TRAFFIC MANAGEMENT TABLE(S), UNLESS INDICATED OTHERWISE IN THE CONTRACT PLANS OR PROPOSAL DOCUMENTS.

3) LANE CLOSURE CHARTS SHALL APPLY AS FOLLOWS:

- 1,150 VEH/HR/LANE: APPLIES TO ALL WORK REQUIRING LANE CLOSURE(S) EXCEPT AS PERMITTED BELOW.

- 1,300 VEH/HR/LANE: APPLIES TO NON-EVASIVE WORK WHERE WORKERS AND/OR EQUIPMENT ARE LOCATED 4 FT. OR MORE FROM TRAVEL (SPACE) LANE, OR AS APPROVED BY THE THRUWAY PROJECT ENGINEER. WORK SHOULD BE ABLE TO BE IMMEDIATELY STOPPED AND LANE CLOSURE(S) REMOVED IN THE EVENT QUEUES, GREATER THAN 1 MILE, DEVELOP.

NEW YORK STATE OF OPPORTUNITY. Thruway Authority

U.S. CUSTOMARY STANDARD SHEET

LANE CLOSURE CHARTS
1,300 VEHICLES PER HOUR
BUFFALO DIVISION
(SHEET 9 OF 37)

APPROVED SEPTEMBER 1, 2018

/S/ PATRICK THOMPSON, P.E.
DIRECTOR DESIGN SUPPORT SERVICES BUREAU

ISSUED UNDER DB 18-003

TA 619-37

I-90 WESTBOUND INTERCHANGES 52 TO 52A (1,300 VEH/HR/LANE)

LANES REQUIRED TO BE OPEN BY HOUR AND TIME OF DAY

SPRING SEASON MARCH 1 THRU MAY 20

HR/DAY	MON	TUES	WEDS	THUR	FRI	SAT	SUN
0	1	1	1	1	1	1	1
1	1	1	1	1	1	1	1
2	1	1	1	1	1	1	1
3	1	1	1	1	1	1	1
4	1	1	1	1	1	1	1
5	1	1	1	1	1	1	1
6	3	3	3	3	3	1	1
7	3	3	3	3	3	2	1
8	3	3	3	3	3	2	2
9	3	3	3	3	3	3	2
10	3	3	3	3	3	3	2
11	3	3	3	3	3	3	3
12	3	3	3	3	3	3	3
13	3	3	3	3	3	3	3
14	3	3	3	3	3	3	3
15	3	3	3	3	3	3	3
16	3	3	3	3	3	3	3
17	3	3	3	3	3	3	3
18	3	3	3	3	3	3	3
19	3	3	3	3	3	3	3
20	2	3	3	3	3	2	2
21	2	2	3	3	3	2	2
22	2	2	2	2	2	2	1
23	1	1	1	1	2	2	1

SUMMER SEASON MAY 21 THRU SEPTEMBER 15

HR/DAY	MON	TUES	WEDS	THUR	FRI	SAT	SUN
0	1	1	1	1	1	1	1
1	1	1	1	1	1	1	1
2	1	1	1	1	1	1	1
3	1	1	1	1	1	1	1
4	1	1	1	1	1	1	1
5	1	1	2	1	1	1	1
6	3	3	3	3	3	1	1
7	3	3	3	3	3	2	1
8	3	3	3	3	3	3	2
9	3	3	3	3	3	3	3
10	3	3	3	3	3	3	3
11	3	3	3	3	3	3	3
12	3	3	3	3	3	3	3
13	3	3	3	3	3	3	3
14	3	3	3	3	3	3	3
15	3	3	3	3	3	3	3
16	3	3	3	3	3	3	3
17	3	3	3	3	3	3	3
18	3	3	3	3	3	3	3
19	3	3	3	3	3	3	3
20	3	3	3	3	3	3	2
21	2	3	3	3	3	3	2
22	2	2	2	2	2	2	2
23	1	2	2	2	2	2	1

LANES REQUIRED TO BE OPEN BY HOUR AND TIME OF DAY

FALL SEASON SEPTEMBER 16 THRU November 30

HR/DAY	MON	TUES	WEDS	THUR	FRI	SAT	SUN
0	1	1	1	1	1	1	1
1	1	1	1	1	1	1	1
2	1	1	1	1	1	1	1
3	1	1	1	1	1	1	1
4	1	1	1	1	1	1	1
5	1	1	1	1	1	1	1
6	3	3	3	3	3	1	1
7	3	3	3	3	3	2	1
8	3	3	3	3	3	2	2
9	3	3	3	3	3	3	3
10	3	3	3	3	3	3	3
11	3	3	3	3	3	3	3
12	3	3	3	3	3	3	3
13	3	3	3	3	3	3	3
14	3	3	3	3	3	3	3
15	3	3	3	3	3	3	3
16	3	3	3	3	3	3	3
17	3	3	3	3	3	3	3
18	3	3	3	3	3	3	2
19	3	3	3	3	3	2	2
20	2	2	2	3	2	2	2
21	2	2	2	2	2	2	1
22	2	2	2	2	2	2	1
23	1	1	1	1	2	1	1

WINTER SEAS. DECEMBER 1 THRU February 28

HR/DAY	MON	TUES	WEDS	THUR	FRI	SAT	SUN
0	1	1	1	1	1	1	1
1	1	1	1	1	1	1	1
2	1	1	1	1	1	1	1
3	1	1	1	1	1	1	1
4	1	1	1	1	1	1	1
5	1	1	1	1	1	1	1
6	3	3	3	3	3	1	1
7	3	3	3	3	3	2	1
8	3	3	3	3	3	2	2
9	3	3	3	3	3	2	2
10	3	3	3	3	3	3	3
11	3	3	3	3	3	3	3
12	3	3	3	3	3	3	3
13	3	3	3	3	3	3	3
14	3	3	3	3	3	3	3
15	3	3	3	3	3	3	3
16	3	3	3	3	3	3	3
17	3	3	3	3	3	3	3
18	3	3	3	3	3	3	2
19	3	3	3	3	3	2	2
20	2	3	3	2	2	2	2
21	2	2	2	2	2	2	1
22	2	2	2	2	2	2	1
23	1	1	1	1	2	2	1

I-90 EASTBOUND INTERCHANGES 52A TO 52 (1,300 VEH/HR/LANE)

LANES REQUIRED TO BE OPEN BY HOUR AND TIME OF DAY

SPRING SEASON MARCH 1 THRU MAY 20

HR/DAY	MON	TUES	WEDS	THUR	FRI	SAT	SUN
0	1	1	1	1	1	1	1
1	1	1	1	1	1	1	1
2	1	1	1	1	1	1	1
3	1	1	1	1	1	1	1
4	1	1	1	1	1	1	1
5	2	2	2	2	2	1	1
6	3	3	3	3	3	2	1
7	3	3	3	3	3	2	1
8	3	3	3	3	3	3	2
9	3	3	3	3	3	3	2
10	3	3	3	3	3	3	3
11	3	3	3	3	3	3	3
12	3	3	3	3	3	3	3
13	3	3	3	3	3	3	3
14	3	3	3	3	3	3	3
15	3	3	3	3	3	3	3
16	3	3	3	3	3	3	3
17	3	3	3	3	3	3	3
18	3	3	3	3	3	3	3
19	2	2	3	2	3	2	3
20	2	2	2	2	2	2	2
21	2	2	2	2	2	2	2
22	1	2	1	2	2	2	2
23	1	1	1	1	1	1	1

SUMMER SEASON MAY 21 THRU SEPTEMBER 15

HR/DAY	MON	TUES	WEDS	THUR	FRI	SAT	SUN
0	1	1	1	1	1	1	1
1	1	1	1	1	1	1	1
2	1	1	1	1	1	1	1
3	1	1	1	1	1	1	1
4	1	1	1	1	1	1	1
5	2	2	2	2	2	1	1
6	3	3	3	3	3	2	1
7	3	3	3	3	3	2	1
8	3	3	3	3	3	3	2
9	3	3	3	3	3	3	2
10	3	3	3	3	3	3	3
11	3	3	3	3	3	3	3
12	3	3	3	3	3	3	3
13	3	3	3	3	3	3	3
14	3	3	3	3	3	3	3
15	3	3	3	3	3	3	3
16	3	3	3	3	3	3	3
17	3	3	3	3	3	3	3
18	3	3	3	3	3	3	3
19	2	2	3	3	3	3	3
20	2	2	2	2	2	3	3
21	2	2	2	2	2	2	2
22	2	2	2	2	3	2	2
23	1	1	2	2	2	2	1

LANES REQUIRED TO BE OPEN BY HOUR AND TIME OF DAY

FALL SEASON SEPTEMBER 16 THRU November 30

HR/DAY	MON	TUES	WEDS	THUR	FRI	SAT	SUN
0	1	1	1	1	2	1	1
1	1	1	1	1	1	1	1
2	1	1	1	1	1	1	1
3	1	1	1	1	1	1	1
4	1	1	1	1	1	1	1
5	2	2	2	2	2	1	1
6	3	3	3	3	3	2	1
7	3	3	3	3	3	2	1
8	3	3	3	3	3	3	2
9	3	3	3	3	3	3	2
10	3	3	3	3	3	3	3
11	3	3	3	3	3	3	3
12	3	3	3	3	3	3	3
13	3	3	3	3	3	3	3
14	3	3	3	3	3	3	3
15	3	3	3	3	3	3	3
16	3	3	3	3	3	3	3
17	3	3	3	3	3	3	3
18	3	3	3	3	3	3	3
19	2	2	2	3	3	3	3
20	2	2	2	3	2	2	2
21	2	2	2	2	2	2	2
22	1	2	2	2	2	2	1
23	1	1	1	2	2	2	1

WINTER SEAS. DECEMBER 1 THRU February 28

HR/DAY	MON	TUES	WEDS	THUR	FRI	SAT	SUN
0	1	1	1	1	1	1	1
1	1	1	1	1	1	1	1
2	1	1	1	1	1	1	1
3	1	1	1	1	1	1	1
4	1	1	1	1	1	1	1
5	2	2	2	2	2	1	1
6	3	3	3	3	3	1	1
7	3	3	3	3	3	2	1
8	3	3	3	3	3	2	2
9	3	3	3	3	3	3	2
10	3	3	3	3	3	3	3
11	3	3	3	3	3	3	3
12	3	3	3	3	3	3	3
13	3	3	3	3	3	3	3
14	3	3	3	3	3	3	3
15	3	3	3	3	3	3	3
16	3	3	3	3	3	3	3
17	3	3	3	3	3	3	3
18	3	3	3	3	3	3	3
19	2	2	2	2	2	2	2
20	2	2	2	2	2	2	2
21	2	2	2	2	2	2	2
22	2	2	2	2	2	2	2
23	1	1	1	1	2	1	1

NOTES:

1) THE NEW YORK STATE THRUWAY IS A LIMITED ACCESS, HIGH-SPEED, HIGH-VOLUME HIGHWAY. TRAFFIC SHALL BE MAINTAINED IN ACCORDANCE WITH THE *MANUAL ON UNIFORM TRAFFIC CONTROL DEVICES (MUTCD)*, THE *WORK ZONE TRAFFIC CONTROL PLANS*, AND THE *STANDARD SPECIFICATIONS* SECTION 619 AS AMENDED BY THE AUTHORITY.

2) LANE CLOSURES ON THE THRUWAY SHALL ONLY BE ALLOWED IN ACCORDANCE WITH THESE TRAFFIC MANAGEMENT TABLE(S), UNLESS INDICATED OTHERWISE IN THE CONTRACT PLANS OR PROPOSAL DOCUMENTS.

3) LANE CLOSURE CHARTS SHALL APPLY AS FOLLOWS:

- 1,150 VEH/HR/LANE: APPLIES TO ALL WORK REQUIRING LANE CLOSURE(S) EXCEPT AS PERMITTED BELOW.

- 1,300 VEH/HR/LANE: APPLIES TO NON-EVASIVE WORK WHERE WORKERS AND/OR EQUIPMENT ARE LOCATED 4 FT. OR MORE FROM TRAVEL (SPACE) LANE, OR AS APPROVED BY THE THRUWAY PROJECT ENGINEER. WORK SHOULD BE ABLE TO BE IMMEDIATELY STOPPED AND LANE CLOSURE(S) REMOVED IN THE EVENT QUEUES, GREATER THAN 1 MILE, DEVELOP.

NEW YORK STATE OF OPPORTUNITY. Thruway Authority

U.S. CUSTOMARY STANDARD SHEET

LANE CLOSURE CHARTS
1,300 VEHICLES PER HOUR
BUFFALO DIVISION
(SHEET 10 OF 37)

APPROVED SEPTEMBER 1, 2018

/S/ PATRICK THOMPSON, P.E.
DIRECTOR DESIGN SUPPORT SERVICES BUREAU

ISSUED UNDER DB 18-003

TA 619-37

I-90 WESTBOUND INTERCHANGES 52A TO 53 (1,300 VEH/HR/LANE)

LANES REQUIRED TO BE OPEN BY HOUR AND TIME OF DAY

SPRING SEASON MARCH 1 THRU MAY 20

HR/DAY	MON	TUES	WEDS	THUR	FRI	SAT	SUN
0	1	1	1	1	1	1	1
1	1	1	1	1	1	1	1
2	1	1	1	1	1	1	1
3	1	1	1	1	1	1	1
4	1	1	1	1	1	1	1
5	1	1	1	1	1	1	1
6	3	3	3	3	2	1	1
7	3	3	3	3	3	2	1
8	3	3	3	3	3	2	1
9	3	3	3	3	3	3	2
10	3	3	3	3	3	3	2
11	3	3	3	3	3	3	3
12	3	3	3	3	3	3	3
13	3	3	3	3	3	3	3
14	3	3	3	3	3	3	3
15	3	3	3	3	3	3	3
16	3	3	3	3	3	3	3
17	3	3	3	3	3	3	3
18	3	3	3	3	3	3	3
19	2	3	3	3	3	2	2
20	2	2	3	2	2	2	2
21	2	2	2	2	2	2	2
22	1	1	2	2	2	2	1
23	1	1	1	1	1	1	1

SUMMER SEASON MAY 21 THRU SEPTEMBER 15

HR/DAY	MON	TUES	WEDS	THUR	FRI	SAT	SUN
0	1	1	1	1	1	1	1
1	1	1	1	1	1	1	1
2	1	1	1	1	1	1	1
3	1	1	1	1	1	1	1
4	1	1	1	1	1	1	1
5	1	1	1	1	1	1	1
6	3	3	3	3	3	1	1
7	3	3	3	3	3	2	1
8	3	3	3	3	3	2	2
9	3	3	3	3	3	3	3
10	3	3	3	3	3	3	3
11	3	3	3	3	3	3	3
12	3	3	3	3	3	3	3
13	3	3	3	3	3	3	3
14	3	3	3	3	3	3	3
15	3	3	3	3	3	3	3
16	3	3	3	3	3	3	3
17	3	3	3	3	3	3	3
18	3	3	3	3	3	3	3
19	3	3	3	3	3	2	2
20	2	2	3	3	2	2	2
21	2	2	2	2	2	2	2
22	2	2	2	2	2	2	1
23	1	1	1	1	2	2	1

LANES REQUIRED TO BE OPEN BY HOUR AND TIME OF DAY

FALL SEASON SEPTEMBER 16 THRU November 30

HR/DAY	MON	TUES	WEDS	THUR	FRI	SAT	SUN
0	1	1	1	1	1	1	1
1	1	1	1	1	1	1	1
2	1	1	1	1	1	1	1
3	1	1	1	1	1	1	1
4	1	1	1	1	1	1	1
5	1	1	1	1	1	1	1
6	3	3	3	3	3	1	1
7	3	3	3	3	3	2	1
8	3	3	3	3	3	2	3
9	3	3	3	3	3	3	3
10	3	3	3	3	3	3	3
11	3	3	3	3	3	3	3
12	3	3	3	3	3	3	3
13	3	3	3	3	3	3	3
14	3	3	3	3	3	3	3
15	3	3	3	3	3	3	3
16	3	3	3	3	3	3	3
17	3	3	3	3	3	3	3
18	3	3	3	3	3	3	2
19	2	3	3	3	3	2	2
20	2	2	2	2	2	2	2
21	2	2	2	2	2	2	1
22	1	2	2	2	2	2	1
23	1	1	1	1	2	1	1

WINTER SEAS. DECEMBER 1 THRU February 28

HR/DAY	MON	TUES	WEDS	THUR	FRI	SAT	SUN
0	1	1	1	1	1	1	1
1	1	1	1	1	1	1	1
2	1	1	1	1	1	1	1
3	1	1	1	1	1	1	1
4	1	1	1	1	1	1	1
5	1	1	1	1	1	1	1
6	3	3	3	3	3	1	1
7	3	3	3	3	3	2	1
8	3	3	3	3	3	2	2
9	3	3	3	3	3	2	2
10	3	3	3	3	3	3	3
11	3	3	3	3	3	3	3
12	3	3	3	3	3	3	3
13	3	3	3	3	3	3	3
14	3	3	3	3	3	3	3
15	3	3	3	3	3	3	3
16	3	3	3	3	3	3	3
17	3	3	3	3	3	3	3
18	3	3	3	3	3	3	2
19	3	3	3	3	3	2	2
20	2	2	2	2	2	2	2
21	2	2	2	2	2	2	1
22	2	2	2	2	2	2	1
23	1	1	1	1	2	1	1

I-90 EASTBOUND INTERCHANGES 53 TO 52A (1,300 VEH/HR/LANE)

LANES REQUIRED TO BE OPEN BY HOUR AND TIME OF DAY

SPRING SEASON MARCH 1 THRU MAY 20

HR/DAY	MON	TUES	WEDS	THUR	FRI	SAT	SUN
0	1	1	1	1	1	1	1
1	1	1	1	1	1	1	1
2	1	1	1	1	1	1	1
3	1	1	1	1	1	1	1
4	1	1	1	1	1	1	1
5	2	2	2	2	2	1	1
6	3	3	3	3	3	1	1
7	3	3	3	3	3	2	1
8	3	3	3	3	3	2	2
9	3	3	3	3	3	3	2
10	3	3	3	3	3	3	3
11	3	3	3	3	3	3	3
12	3	3	3	3	3	3	3
13	3	3	3	3	3	3	3
14	3	3	3	3	3	3	3
15	3	3	3	3	3	3	3
16	3	3	3	3	3	3	3
17	3	3	3	3	3	3	3
18	3	3	3	3	3	3	3
19	2	2	2	2	2	2	3
20	2	2	2	2	2	2	2
21	2	2	2	2	2	2	2
22	2	2	2	2	2	2	2
23	1	1	1	1	2	2	1

SUMMER SEASON MAY 21 THRU SEPTEMBER 15

HR/DAY	MON	TUES	WEDS	THUR	FRI	SAT	SUN
0	1	1	1	1	1	1	1
1	1	1	1	1	1	1	1
2	1	1	1	1	1	1	1
3	1	1	1	1	1	1	1
4	1	1	1	1	1	1	1
5	2	2	2	2	2	1	1
6	3	3	3	3	3	2	1
7	3	3	3	3	3	2	1
8	3	3	3	3	3	2	2
9	3	3	3	3	3	3	2
10	3	3	3	3	3	3	3
11	3	3	3	3	3	3	3
12	3	3	3	3	3	3	3
13	3	3	3	3	3	3	3
14	3	3	3	3	3	3	3
15	3	3	3	3	3	3	3
16	3	3	3	3	3	3	3
17	3	3	3	3	3	3	3
18	3	3	3	3	3	3	3
19	2	2	2	3	3	3	3
20	2	2	2	2	2	3	3
21	2	2	2	3	2	2	2
22	2	2	2	2	3	2	2
23	2	1	2	2	2	2	1

LANES REQUIRED TO BE OPEN BY HOUR AND TIME OF DAY

FALL SEASON SEPTEMBER 16 THRU November 30

HR/DAY	MON	TUES	WEDS	THUR	FRI	SAT	SUN
0	1	1	1	1	2	1	1
1	1	1	1	1	1	1	1
2	1	1	1	1	1	1	1
3	1	1	1	1	1	1	1
4	1	1	1	1	1	1	1
5	2	2	2	2	2	1	1
6	3	3	3	3	3	1	1
7	3	3	3	3	3	2	1
8	3	3	3	3	3	2	2
9	3	3	3	3	3	3	2
10	3	3	3	3	3	3	3
11	3	3	3	3	3	3	3
12	3	3	3	3	3	3	3
13	3	3	3	3	3	3	3
14	3	3	3	3	3	3	3
15	3	3	3	3	3	3	3
16	3	3	3	3	3	3	3
17	3	3	3	3	3	3	3
18	3	3	3	3	3	3	3
19	2	2	3	3	3	2	3
20	2	2	2	2	2	2	2
21	2	2	2	2	2	2	2
22	2	2	2	2	2	2	1
23	1	1	1	2	2	2	1

WINTER SEAS. DECEMBER 1 THRU February 28

HR/DAY	MON	TUES	WEDS	THUR	FRI	SAT	SUN
0	1	1	1	1	1	1	1
1	1	1	1	1	1	1	1
2	1	1	1	1	1	1	1
3	1	1	1	1	1	1	1
4	1	1	1	1	1	1	1
5	2	2	2	2	1	1	1
6	3	3	3	3	3	1	1
7	3	3	3	3	3	2	1
8	3	3	3	3	3	2	1
9	3	3	3	3	3	3	2
10	3	3	3	3	3	3	2
11	3	3	3	3	3	3	3
12	3	3	3	3	3	3	3
13	3	3	3	3	3	3	3
14	3	3	3	3	3	3	3
15	3	3	3	3	3	3	3
16	3	3	3	3	3	3	3
17	3	3	3	3	3	3	3
18	3	3	3	3	3	3	3
19	2	2	2	2	2	2	2
20	2	2	2	2	2	2	2
21	2	2	2	2	2	2	2
22	2	2	2	2	2	2	2
23	1	1	1	1	2	1	1

NOTES:

1) THE NEW YORK STATE THRUWAY IS A LIMITED ACCESS, HIGH-SPEED, HIGH-VOLUME HIGHWAY. TRAFFIC SHALL BE MAINTAINED IN ACCORDANCE WITH THE *MANUAL ON UNIFORM TRAFFIC CONTROL DEVICES (MUTCD)*, THE *WORK ZONE TRAFFIC CONTROL PLANS*, AND THE *STANDARD SPECIFICATIONS* SECTION 619 AS AMENDED BY THE AUTHORITY.

2) LANE CLOSURES ON THE THRUWAY SHALL ONLY BE ALLOWED IN ACCORDANCE WITH THESE TRAFFIC MANAGEMENT TABLE(S), UNLESS INDICATED OTHERWISE IN THE CONTRACT PLANS OR PROPOSAL DOCUMENTS.

3) LANE CLOSURE CHARTS SHALL APPLY AS FOLLOWS:

- 1,150 VEH/HR/LANE: APPLIES TO ALL WORK REQUIRING LANE CLOSURE(S) EXCEPT AS PERMITTED BELOW.

- 1,300 VEH/HR/LANE: APPLIES TO NON-EVASIVE WORK WHERE WORKERS AND/OR EQUIPMENT ARE LOCATED 4 FT. OR MORE FROM TRAVEL (SPACE) LANE, OR AS APPROVED BY THE THRUWAY PROJECT ENGINEER. WORK SHOULD BE ABLE TO BE IMMEDIATELY STOPPED AND LANE CLOSURE(S) REMOVED IN THE EVENT QUEUES, GREATER THAN 1 MILE, DEVELOP.

NEW YORK STATE OF OPPORTUNITY. Thruway Authority

U.S. CUSTOMARY STANDARD SHEET

LANE CLOSURE CHARTS
1,300 VEHICLES PER HOUR
BUFFALO DIVISION
(SHEET 11 OF 37)

APPROVED SEPTEMBER 1, 2018

/S/ PATRICK THOMPSON, P.E.
DIRECTOR DESIGN SUPPORT SERVICES BUREAU

ISSUED UNDER DB 18-003

TA 619-37

I-90 WESTBOUND INTERCHANGES 53 TO 54 (1,300 VEH/HR/LANE)

LANES REQUIRED TO BE OPEN BY HOUR AND TIME OF DAY

SPRING SEASON MARCH 1 THRU MAY 20

HR/DAY	MON	TUES	WEDS	THUR	FRI	SAT	SUN
0	1	1	1	1	1	1	1
1	1	1	1	1	1	1	1
2	1	1	1	1	1	1	1
3	1	1	1	1	1	1	1
4	1	1	1	1	1	1	1
5	1	1	1	1	1	1	1
6	3	2	2	2	2	1	1
7	4	4	4	4	4	2	1
8	4	4	4	4	4	3	2
9	3	3	3	3	3	3	2
10	3	3	3	3	3	3	3
11	3	3	3	3	4	4	3
12	3	3	3	3	4	4	3
13	3	3	4	4	4	4	3
14	4	4	4	4	4	4	3
15	4	4	4	4	4	4	3
16	4	4	4	4	4	4	3
17	4	4	4	4	4	3	3
18	4	4	4	4	4	3	3
19	3	3	3	3	3	2	3
20	2	3	3	3	3	2	2
21	2	2	3	2	2	2	2
22	2	2	2	2	2	2	2
23	1	1	2	2	2	2	1

SUMMER SEASON MAY 21 THRU SEPTEMBER 15

HR/DAY	MON	TUES	WEDS	THUR	FRI	SAT	SUN
0	1	1	1	1	1	2	1
1	1	1	1	1	1	1	1
2	1	1	1	1	1	1	1
3	1	1	1	1	1	1	1
4	1	1	1	1	1	1	1
5	1	1	1	1	1	1	1
6	3	2	2	2	2	2	1
7	4	4	4	4	4	2	2
8	4	4	4	4	4	3	2
9	3	3	3	3	4	3	3
10	3	3	3	3	4	4	3
11	4	3	4	4	4	4	4
12	4	4	4	4	4	4	4
13	4	4	4	4	4	4	4
14	4	4	4	4	4	4	4
15	4	4	4	4	4	4	4
16	4	4	4	4	4	4	4
17	4	4	4	4	4	4	3
18	4	4	4	4	4	3	3
19	3	3	3	3	3	3	3
20	3	3	3	3	3	2	2
21	2	2	3	3	3	2	2
22	2	2	2	2	2	2	2
23	2	2	2	2	2	2	1

LANES REQUIRED TO BE OPEN BY HOUR AND TIME OF DAY

FALL SEASON SEPTEMBER 16 THRU November 30

HR/DAY	MON	TUES	WEDS	THUR	FRI	SAT	SUN
0	1	1	1	1	1	1	1
1	1	1	1	1	1	1	1
2	1	1	1	1	1	1	1
3	1	1	1	1	1	1	1
4	1	1	1	1	1	1	1
5	1	1	1	1	1	1	1
6	2	2	2	3	2	1	1
7	4	4	4	4	4	2	2
8	4	4	4	4	4	3	3
9	3	3	3	3	3	3	4
10	3	3	3	3	3	4	4
11	3	3	3	3	4	4	4
12	3	3	4	3	4	4	4
13	4	4	4	4	4	4	3
14	4	4	4	4	4	4	3
15	4	4	4	4	4	4	3
16	4	4	4	4	4	4	3
17	4	4	4	4	4	3	3
18	4	4	4	4	4	3	3
19	3	3	3	3	3	3	2
20	2	3	3	3	3	2	2
21	2	2	2	3	3	2	2
22	2	2	2	2	3	2	1
23	1	1	2	1	2	2	1

WINTER SEAS. DECEMBER 1 THRU February 28

HR/DAY	MON	TUES	WEDS	THUR	FRI	SAT	SUN
0	1	1	1	1	1	1	1
1	1	1	1	1	1	1	1
2	1	1	1	1	1	1	1
3	1	1	1	1	1	1	1
4	1	1	1	1	1	1	1
5	1	1	1	1	1	1	1
6	2	2	2	2	2	1	1
7	4	4	4	4	4	2	1
8	4	4	4	4	4	2	2
9	3	3	3	3	3	3	3
10	3	3	3	3	3	3	3
11	3	3	3	3	3	3	3
12	3	4	4	3	4	4	3
13	4	4	4	3	4	4	3
14	4	4	4	4	4	4	3
15	4	4	4	4	4	4	3
16	4	4	4	4	4	4	3
17	4	4	4	4	4	3	3
18	4	4	4	4	4	3	2
19	3	3	3	3	3	2	2
20	2	3	3	3	3	2	2
21	2	3	2	2	3	2	2
22	2	2	2	2	3	2	2
23	1	2	2	2	2	2	1

I-90 EASTBOUND INTERCHANGES 54 TO 53 (1,300 VEH/HR/LANE)

LANES REQUIRED TO BE OPEN BY HOUR AND TIME OF DAY

SPRING SEASON MARCH 1 THRU MAY 20

HR/DAY	MON	TUES	WEDS	THUR	FRI	SAT	SUN
0	1	1	1	1	1	1	1
1	1	1	1	1	1	1	1
2	1	1	1	1	1	1	1
3	1	1	1	1	1	1	1
4	1	1	1	1	1	1	1
5	2	2	2	2	2	1	1
6	4	4	4	4	4	2	1
7	4	4	4	4	4	2	1
8	4	4	4	4	4	3	2
9	4	4	4	4	4	3	2
10	3	3	3	3	3	3	3
11	3	3	3	3	3	3	3
12	3	3	3	3	4	4	4
13	3	3	3	3	4	4	4
14	4	4	4	4	4	4	4
15	4	4	4	4	4	4	4
16	4	4	4	4	4	3	4
17	4	4	4	4	4	4	3
18	3	3	4	3	4	3	3
19	3	2	3	3	3	3	3
20	2	2	2	2	2	2	3
21	2	2	2	2	2	2	2
22	1	1	2	2	2	2	2
23	1	1	1	1	1	2	1

SUMMER SEASON MAY 21 THRU SEPTEMBER 15

HR/DAY	MON	TUES	WEDS	THUR	FRI	SAT	SUN
0	1	1	1	1	1	1	1
1	1	1	1	1	1	1	1
2	1	1	1	1	1	1	1
3	1	1	1	1	1	1	1
4	1	1	1	1	1	1	1
5	2	2	2	2	2	1	1
6	4	4	4	4	4	2	1
7	4	4	4	4	4	2	1
8	4	4	4	4	4	3	2
9	4	4	4	4	4	3	2
10	4	3	4	4	4	3	3
11	4	3	4	4	4	4	3
12	4	4	4	4	4	4	4
13	4	3	4	4	4	4	4
14	4	4	4	4	4	4	4
15	4	4	4	4	4	4	4
16	4	4	4	4	4	4	4
17	4	4	4	4	4	4	4
18	3	3	4	4	4	3	4
19	3	3	3	3	3	3	3
20	2	2	3	3	3	3	3
21	2	2	2	3	3	3	3
22	2	2	2	3	3	3	2
23	1	1	2	2	2	2	2

LANES REQUIRED TO BE OPEN BY HOUR AND TIME OF DAY

FALL SEASON SEPTEMBER 16 THRU November 30

HR/DAY	MON	TUES	WEDS	THUR	FRI	SAT	SUN
0	1	1	1	1	2	1	2
1	1	1	1	1	1	1	2
2	1	1	1	1	1	1	2
3	2	1	1	1	1	1	2
4	2	1	1	1	1	1	2
5	2	2	2	2	2	1	2
6	4	4	4	4	4	2	2
7	4	4	4	4	4	2	2
8	4	4	4	4	4	3	2
9	4	4	4	4	4	3	2
10	4	3	3	4	4	3	3
11	4	3	3	3	4	4	3
12	4	3	3	3	4	4	4
13	4	3	3	3	4	4	4
14	4	4	4	4	4	4	4
15	4	4	4	4	4	4	4
16	4	4	4	4	4	4	4
17	4	4	4	4	4	4	4
18	4	3	3	4	4	4	4
19	3	3	3	3	3	3	4
20	2	2	2	3	2	2	3
21	2	2	2	2	2	2	2
22	2	1	2	2	2	2	2
23	2	1	1	2	2	2	2

WINTER SEAS. DECEMBER 1 THRU February 28

HR/DAY	MON	TUES	WEDS	THUR	FRI	SAT	SUN
0	1	1	1	1	1	1	1
1	1	1	1	1	1	1	1
2	1	1	1	1	1	1	1
3	1	1	2	1	1	1	1
4	1	1	2	1	1	1	1
5	2	2	3	2	2	1	1
6	4	4	4	4	4	2	1
7	4	4	4	4	4	2	1
8	4	4	4	4	4	2	1
9	4	4	4	4	4	3	2
10	3	3	3	3	4	3	2
11	3	3	3	3	4	3	3
12	4	3	3	3	4	3	3
13	4	3	3	3	4	3	3
14	4	4	4	4	4	4	3
15	4	4	4	4	4	4	4
16	4	4	4	4	4	4	4
17	4	4	4	4	4	4	4
18	3	3	3	3	4	3	3
19	2	2	2	2	3	2	2
20	2	2	2	2	2	2	2
21	2	2	2	2	2	2	2
22	2	2	2	2	2	2	2
23	1	1	1	1	1	2	1

NOTES:

1) THE NEW YORK STATE THRUWAY IS A LIMITED ACCESS, HIGH-SPEED, HIGH-VOLUME HIGHWAY. TRAFFIC SHALL BE MAINTAINED IN ACCORDANCE WITH THE *MANUAL ON UNIFORM TRAFFIC CONTROL DEVICES (MUTCD)*, THE *WORK ZONE TRAFFIC CONTROL PLANS*, AND THE *STANDARD SPECIFICATIONS* SECTION 619 AS AMENDED BY THE AUTHORITY.

2) LANE CLOSURES ON THE THRUWAY SHALL ONLY BE ALLOWED IN ACCORDANCE WITH THESE TRAFFIC MANAGEMENT TABLE(S), UNLESS INDICATED OTHERWISE IN THE CONTRACT PLANS OR PROPOSAL DOCUMENTS.

3) LANE CLOSURE CHARTS SHALL APPLY AS FOLLOWS:

- 1,150 VEH/HR/LANE: APPLIES TO ALL WORK REQUIRING LANE CLOSURE(S) EXCEPT AS PERMITTED BELOW.

- 1,300 VEH/HR/LANE: APPLIES TO NON-EVASIVE WORK WHERE WORKERS AND/OR EQUIPMENT ARE LOCATED 4 FT. OR MORE FROM TRAVEL (SPACE) LANE, OR AS APPROVED BY THE THRUWAY PROJECT ENGINEER. WORK SHOULD BE ABLE TO BE IMMEDIATELY STOPPED AND LANE CLOSURE(S) REMOVED IN THE EVENT QUEUES, GREATER THAN 1 MILE, DEVELOP.

NEW YORK STATE OF OPPORTUNITY. Thruway Authority

U.S. CUSTOMARY STANDARD SHEET

LANE CLOSURE CHARTS
1,300 VEHICLES PER HOUR
BUFFALO DIVISION
(SHEET 12 OF 37)

APPROVED SEPTEMBER 1, 2018

/S/ PATRICK THOMPSON, P.E.
DIRECTOR DESIGN SUPPORT SERVICES BUREAU

ISSUED UNDER DB 18-003

TA 619-37

I-90 WESTBOUND INTERCHANGES 54 TO 55 (1,300 VEH/HR/LANE)

LANES REQUIRED TO BE OPEN BY HOUR AND TIME OF DAY

SPRING SEASON MARCH 1 THRU MAY 20

HR/DAY	MON	TUES	WEDS	THUR	FRI	SAT	SUN
0	1	1	1	1	1	1	1
1	1	1	1	1	1	1	1
2	1	1	1	1	1	1	1
3	1	1	1	1	1	1	1
4	1	1	1	1	1	1	1
5	1	1	1	1	1	1	1
6	3	3	3	3	3	1	1
7	3	3	3	3	3	2	1
8	3	3	3	3	3	2	1
9	2	2	3	3	3	2	2
10	2	2	2	3	3	3	2
11	3	3	3	3	3	3	3
12	3	3	3	3	3	3	3
13	3	3	3	3	3	3	3
14	3	3	3	3	3	3	3
15	3	3	3	3	3	3	3
16	3	3	3	3	3	3	3
17	3	3	3	3	3	3	2
18	3	3	3	3	3	2	2
19	2	2	2	2	2	2	2
20	2	2	2	2	2	2	2
21	2	2	2	2	2	2	1
22	1	1	2	2	2	2	1
23	1	1	1	1	1	1	1

SUMMER SEASON MAY 21 THRU SEPTEMBER 15

HR/DAY	MON	TUES	WEDS	THUR	FRI	SAT	SUN
0	1	1	1	1	1	1	1
1	1	1	1	1	1	1	1
2	1	1	1	1	1	1	1
3	1	1	1	1	1	1	1
4	1	1	1	1	1	1	1
5	1	1	1	1	1	1	1
6	3	3	3	3	3	1	1
7	3	3	3	3	3	2	1
8	3	3	3	3	3	2	2
9	3	3	3	3	3	3	3
10	3	3	3	3	3	3	3
11	3	3	3	3	3	3	3
12	3	3	3	3	3	3	3
13	3	3	3	3	3	3	3
14	3	3	3	3	3	3	3
15	3	3	3	3	3	3	3
16	3	3	3	3	3	3	3
17	3	3	3	3	3	3	3
18	3	3	3	3	3	3	2
19	2	2	2	3	3	2	2
20	2	2	2	2	2	2	2
21	2	2	2	2	2	2	2
22	1	2	2	2	2	2	1
23	1	1	1	1	2	1	1

LANES REQUIRED TO BE OPEN BY HOUR AND TIME OF DAY

FALL SEASON SEPTEMBER 16 THRU November 30

HR/DAY	MON	TUES	WEDS	THUR	FRI	SAT	SUN
0	1	1	1	1	1	1	1
1	1	1	1	1	1	1	1
2	1	1	1	1	1	1	1
3	1	1	1	1	1	1	1
4	1	1	1	1	1	1	1
5	1	1	1	1	1	1	1
6	3	3	3	3	3	1	1
7	3	3	3	3	3	2	1
8	3	3	3	3	3	2	3
9	2	3	3	3	3	3	3
10	2	3	3	3	3	3	3
11	3	3	3	3	3	3	3
12	3	3	3	3	3	3	3
13	3	3	3	3	3	3	3
14	3	3	3	3	3	3	3
15	3	3	3	3	3	3	3
16	3	3	3	3	3	3	3
17	3	3	3	3	3	3	2
18	3	3	3	3	3	2	2
19	2	2	2	3	3	2	2
20	2	2	2	2	2	2	2
21	2	2	2	2	2	2	1
22	1	2	2	2	2	2	1
23	1	1	1	1	2	1	1

WINTER SEAS. DECEMBER 1 THRU February 28

HR/DAY	MON	TUES	WEDS	THUR	FRI	SAT	SUN
0	1	1	1	1	1	1	1
1	1	1	1	1	1	1	1
2	1	1	1	1	1	1	1
3	1	1	1	1	1	1	1
4	1	1	1	1	1	1	1
5	1	1	1	1	1	1	1
6	3	3	3	3	3	1	1
7	3	3	3	3	3	2	1
8	3	3	3	3	3	2	2
9	2	3	2	2	3	2	2
10	2	3	2	2	3	3	3
11	3	3	3	3	3	3	3
12	3	3	3	3	3	3	3
13	3	3	3	3	3	3	3
14	3	3	3	3	3	3	3
15	3	3	3	3	3	3	3
16	3	3	3	3	3	3	2
17	3	3	3	3	3	3	2
18	3	3	3	3	3	2	2
19	2	2	2	2	2	2	2
20	2	2	2	2	2	2	2
21	2	2	2	2	2	2	1
22	1	2	2	2	2	2	1
23	1	1	1	1	1	1	1

I-90 EASTBOUND INTERCHANGES 55 TO 54 (1,300 VEH/HR/LANE)

LANES REQUIRED TO BE OPEN BY HOUR AND TIME OF DAY

SPRING SEASON MARCH 1 THRU MAY 20

HR/DAY	MON	TUES	WEDS	THUR	FRI	SAT	SUN
0	1	1	1	1	1	1	1
1	1	1	1	1	1	1	1
2	1	1	1	1	1	1	1
3	1	1	1	1	1	1	1
4	1	1	1	1	1	1	1
5	2	2	2	2	2	1	1
6	3	3	3	3	3	1	1
7	3	3	3	3	3	2	1
8	3	3	3	3	3	2	1
9	3	3	3	3	3	2	2
10	3	3	3	3	3	3	2
11	3	3	3	3	3	3	3
12	3	3	3	3	3	3	3
13	3	3	3	3	3	3	3
14	3	3	3	3	3	3	3
15	3	3	3	3	3	3	3
16	3	3	3	3	3	3	3
17	3	3	3	3	3	3	3
18	3	3	3	3	3	3	3
19	2	2	2	2	3	2	3
20	2	2	2	2	2	2	2
21	2	2	2	2	2	2	2
22	1	1	1	2	2	2	1
23	1	1	1	1	1	1	1

SUMMER SEASON MAY 21 THRU SEPTEMBER 15

HR/DAY	MON	TUES	WEDS	THUR	FRI	SAT	SUN
0	1	1	1	1	1	1	1
1	1	1	1	1	1	1	1
2	1	1	1	1	1	1	1
3	1	1	1	1	1	1	1
4	1	1	1	1	1	1	1
5	2	2	2	2	2	1	1
6	3	3	3	3	3	1	1
7	3	3	3	3	3	2	1
8	3	3	3	3	3	2	2
9	3	3	3	3	3	2	2
10	3	3	3	3	3	3	2
11	3	3	3	3	3	3	3
12	3	3	3	3	3	3	3
13	3	3	3	3	3	3	3
14	3	3	3	3	3	3	3
15	3	3	3	3	3	3	3
16	3	3	3	3	3	3	3
17	3	3	3	3	3	3	3
18	3	3	3	3	3	3	3
19	2	2	2	2	3	2	3
20	2	2	2	2	2	2	3
21	2	2	2	2	2	2	2
22	2	2	2	2	2	2	2
23	1	1	1	1	2	2	1

LANES REQUIRED TO BE OPEN BY HOUR AND TIME OF DAY

FALL SEASON SEPTEMBER 16 THRU November 30

HR/DAY	MON	TUES	WEDS	THUR	FRI	SAT	SUN
0	1	1	1	1	2	1	1
1	1	1	1	1	1	1	1
2	1	1	1	1	1	1	1
3	1	1	1	1	1	1	1
4	1	1	1	1	1	1	1
5	2	2	2	2	2	1	1
6	3	3	3	3	3	1	1
7	3	3	3	3	3	2	1
8	3	3	3	3	3	2	1
9	3	3	3	3	3	2	2
10	3	3	3	3	3	3	2
11	3	3	3	3	3	3	3
12	3	3	3	3	3	3	3
13	3	3	3	3	3	3	3
14	3	3	3	3	3	3	3
15	3	3	3	3	3	3	3
16	3	3	3	3	3	3	3
17	3	3	3	3	3	3	3
18	3	3	3	3	3	3	3
19	2	2	2	2	2	2	2
20	2	2	2	2	2	2	2
21	1	2	2	2	2	2	2
22	1	1	1	1	2	2	1
23	1	1	1	2	1	1	1

WINTER SEAS. DECEMBER 1 THRU February 28

HR/DAY	MON	TUES	WEDS	THUR	FRI	SAT	SUN
0	1	1	1	1	1	1	1
1	1	1	1	1	1	1	1
2	1	1	1	1	1	1	1
3	1	1	1	1	1	1	1
4	1	1	1	1	1	1	1
5	2	2	2	2	2	1	1
6	3	3	3	3	3	1	1
7	3	3	3	3	3	2	1
8	3	3	3	3	3	2	1
9	3	3	3	3	3	2	2
10	3	3	3	3	3	3	2
11	3	3	3	3	3	3	3
12	3	3	3	3	3	3	3
13	3	3	3	3	3	3	3
14	3	3	3	3	3	3	3
15	3	3	3	3	3	3	3
16	3	3	3	3	3	3	3
17	3	3	3	3	3	3	3
18	3	2	3	3	3	3	3
19	2	2	2	2	2	2	2
20	2	2	2	2	2	2	2
21	2	2	2	2	2	2	2
22	1	1	1	1	2	2	1
23	1	1	1	1	1	1	1

NOTES:

1) THE NEW YORK STATE THRUWAY IS A LIMITED ACCESS, HIGH-SPEED, HIGH-VOLUME HIGHWAY. TRAFFIC SHALL BE MAINTAINED IN ACCORDANCE WITH THE *MANUAL ON UNIFORM TRAFFIC CONTROL DEVICES (MUTCD)*, THE *WORK ZONE TRAFFIC CONTROL PLANS*, AND THE *STANDARD SPECIFICATIONS* SECTION 619 AS AMENDED BY THE AUTHORITY.

2) LANE CLOSURES ON THE THRUWAY SHALL ONLY BE ALLOWED IN ACCORDANCE WITH THESE TRAFFIC MANAGEMENT TABLE(S), UNLESS INDICATED OTHERWISE IN THE CONTRACT PLANS OR PROPOSAL DOCUMENTS.

3) LANE CLOSURE CHARTS SHALL APPLY AS FOLLOWS:

- 1,150 VEH/HR/LANE: APPLIES TO ALL WORK REQUIRING LANE CLOSURE(S) EXCEPT AS PERMITTED BELOW.

- 1,300 VEH/HR/LANE: APPLIES TO NON-EVASIVE WORK WHERE WORKERS AND/OR EQUIPMENT ARE LOCATED 4 FT. OR MORE FROM TRAVEL (SPACE) LANE, OR AS APPROVED BY THE THRUWAY PROJECT ENGINEER. WORK SHOULD BE ABLE TO BE IMMEDIATELY STOPPED AND LANE CLOSURE(S) REMOVED IN THE EVENT QUEUES, GREATER THAN 1 MILE, DEVELOP.

NEW YORK STATE OF OPPORTUNITY. Thruway Authority

U.S. CUSTOMARY STANDARD SHEET

LANE CLOSURE CHARTS
1,300 VEHICLES PER HOUR
BUFFALO DIVISION
(SHEET 13 OF 37)

APPROVED SEPTEMBER 1, 2018

/S/ PATRICK THOMPSON, P.E.
DIRECTOR DESIGN SUPPORT SERVICES BUREAU

ISSUED UNDER DB 18-003

TA 619-37

I-90 WESTBOUND INTERCHANGES 55 TO 56 (1,300 VEH/HR/LANE)

LANES REQUIRED TO BE OPEN BY HOUR AND TIME OF DAY

SPRING SEASON MARCH 1 THRU MAY 20

HR/DAY	MON	TUES	WEDS	THUR	FRI	SAT	SUN
0	1	1	1	1	1	1	1
1	1	1	1	1	1	1	1
2	1	1	1	1	1	1	1
3	1	1	1	1	1	1	1
4	1	1	1	1	1	1	1
5	1	1	1	1	1	1	1
6	1	1	1	1	1	1	1
7	2	2	2	2	2	1	1
8	2	2	2	2	2	2	1
9	2	2	2	2	2	2	1
10	2	2	2	2	2	2	1
11	2	2	2	2	2	2	2
12	2	2	2	2	2	2	2
13	2	2	2	2	2	2	2
14	2	2	2	2	2	2	2
15	2	2	2	2	2	2	2
16	2	2	2	2	2	2	2
17	2	2	2	2	2	2	2
18	2	2	2	2	2	1	1
19	1	1	1	2	2	1	1
20	1	1	1	1	1	1	1
21	1	1	1	1	1	1	1
22	1	1	1	1	1	1	1
23	1	1	1	1	1	1	1

SUMMER SEASON MAY 21 THRU SEPTEMBER 15

HR/DAY	MON	TUES	WEDS	THUR	FRI	SAT	SUN
0	1	1	1	1	1	1	1
1	1	1	1	1	1	1	1
2	1	1	1	1	1	1	1
3	1	1	1	1	1	1	1
4	1	1	1	1	1	1	1
5	1	1	1	1	1	1	1
6	1	1	1	1	1	1	1
7	2	2	2	2	2	1	1
8	2	2	2	2	2	2	1
9	2	2	2	2	2	2	2
10	2	2	2	2	2	2	2
11	2	2	2	2	2	2	2
12	2	2	2	2	2	2	2
13	2	2	2	2	2	2	2
14	2	2	2	2	2	2	2
15	2	2	2	2	2	2	2
16	2	2	2	2	2	2	2
17	2	2	2	2	2	2	2
18	2	2	2	2	2	2	2
19	1	1	2	2	2	1	2
20	1	1	1	1	1	1	1
21	1	1	1	1	1	1	1
22	1	1	1	1	1	1	1
23	1	1	1	1	1	1	1

LANES REQUIRED TO BE OPEN BY HOUR AND TIME OF DAY

FALL SEASON SEPTEMBER 16 THRU November 30

HR/DAY	MON	TUES	WEDS	THUR	FRI	SAT	SUN
0	1	1	1	1	1	1	1
1	1	1	1	1	1	1	1
2	1	1	1	1	1	1	1
3	1	1	1	1	1	1	1
4	1	1	1	1	1	1	1
5	1	1	1	1	1	1	1
6	1	1	1	1	1	1	1
7	2	2	2	2	2	1	1
8	2	2	2	2	2	2	1
9	2	2	2	2	2	2	2
10	2	2	2	2	2	2	2
11	2	2	2	2	2	2	2
12	2	2	2	2	2	2	2
13	2	2	2	2	2	2	2
14	2	2	2	2	2	2	2
15	2	2	2	2	2	2	2
16	2	2	2	2	2	2	2
17	2	2	2	2	2	2	2
18	2	2	2	2	2	2	2
19	1	1	2	1	2	1	1
20	1	1	1	1	1	1	1
21	1	1	1	1	1	1	1
22	1	1	1	1	1	1	1
23	1	1	1	1	1	1	1

WINTER SEAS. DECEMBER 1 THRU February 28

HR/DAY	MON	TUES	WEDS	THUR	FRI	SAT	SUN
0	1	1	1	1	1	1	1
1	1	1	1	1	1	1	1
2	1	1	1	1	1	1	1
3	1	1	1	1	1	1	1
4	1	1	1	1	1	1	1
5	1	1	1	1	1	1	1
6	2	2	2	2	2	1	1
7	2	2	2	2	2	1	1
8	2	2	2	2	2	1	1
9	2	2	2	2	2	2	1
10	2	2	2	2	2	2	1
11	2	2	2	2	2	2	2
12	2	2	2	2	2	2	2
13	2	2	2	2	2	2	2
14	2	2	2	2	2	2	2
15	2	2	2	2	2	2	2
16	2	2	2	2	2	2	2
17	2	2	2	2	2	2	1
18	2	2	2	2	2	1	1
19	1	1	1	1	1	1	1
20	1	1	1	1	1	1	1
21	1	1	1	1	1	1	1
22	1	1	1	1	1	1	1
23	1	1	1	1	1	1	1

I-90 EASTBOUND INTERCHANGES 56 TO 55 (1,300 VEH/HR/LANE)

LANES REQUIRED TO BE OPEN BY HOUR AND TIME OF DAY

SPRING SEASON MARCH 1 THRU MAY 20

HR/DAY	MON	TUES	WEDS	THUR	FRI	SAT	SUN
0	1	1	1	1	1	1	1
1	1	1	1	1	1	1	1
2	1	1	1	1	1	1	1
3	1	1	1	1	1	1	1
4	1	1	1	1	1	1	1
5	1	1	1	1	1	1	1
6	2	2	2	2	2	1	1
7	2	2	2	2	2	1	1
8	2	2	2	2	2	1	1
9	2	2	2	2	2	1	1
10	2	2	2	2	2	2	1
11	2	2	2	2	2	2	2
12	2	2	2	2	2	2	2
13	2	2	2	2	2	2	2
14	2	2	2	2	2	2	2
15	2	2	2	2	2	2	2
16	2	2	2	2	2	2	2
17	2	2	2	2	2	2	2
18	2	2	2	2	2	2	2
19	2	1	1	1	2	1	2
20	1	1	1	1	1	1	2
21	1	1	1	1	1	1	1
22	1	1	1	1	1	1	1
23	1	1	1	1	1	1	1

SUMMER SEASON MAY 21 THRU SEPTEMBER 15

HR/DAY	MON	TUES	WEDS	THUR	FRI	SAT	SUN
0	1	1	1	1	1	1	1
1	1	1	1	1	1	1	1
2	1	1	1	1	1	1	1
3	1	1	1	1	1	1	1
4	1	1	1	1	1	1	1
5	1	1	1	1	1	1	1
6	2	2	2	2	2	1	1
7	2	2	2	2	2	1	1
8	2	2	2	2	2	1	1
9	2	2	2	2	2	2	1
10	2	2	2	2	2	2	2
11	2	2	2	2	2	2	2
12	2	2	2	2	2	2	2
13	2	2	2	2	2	2	2
14	2	2	2	2	2	2	2
15	2	2	2	2	2	2	2
16	2	2	2	2	2	2	2
17	2	2	2	2	2	2	2
18	2	2	2	2	2	2	2
19	2	1	2	2	2	2	2
20	1	1	1	2	2	2	2
21	1	1	1	1	2	2	2
22	1	1	1	1	2	1	1
23	1	1	1	1	1	1	1

LANES REQUIRED TO BE OPEN BY HOUR AND TIME OF DAY

FALL SEASON SEPTEMBER 16 THRU November 30

HR/DAY	MON	TUES	WEDS	THUR	FRI	SAT	SUN
0	1	1	1	1	1	1	1
1	1	1	1	1	1	1	1
2	1	1	1	1	1	1	1
3	1	1	1	1	1	1	1
4	1	1	1	1	1	1	1
5	1	1	1	1	1	1	1
6	2	2	2	2	2	1	1
7	2	2	2	2	2	1	1
8	2	2	2	2	2	1	1
9	2	2	2	2	2	1	1
10	2	2	2	2	2	2	1
11	2	2	2	2	2	2	2
12	2	2	2	2	2	2	2
13	2	2	2	2	2	2	2
14	2	2	2	2	2	2	2
15	2	2	2	2	2	2	2
16	2	2	2	2	2	2	2
17	2	2	2	2	2	2	2
18	2	2	2	2	2	2	2
19	1	1	1	1	2	1	2
20	1	1	1	1	1	1	1
21	1	1	1	1	1	1	1
22	1	1	1	1	1	1	1
23	1	1	1	1	1	1	1

WINTER SEAS. DECEMBER 1 THRU February 28

HR/DAY	MON	TUES	WEDS	THUR	FRI	SAT	SUN
0	1	1	1	1	1	1	1
1	1	1	1	1	1	1	1
2	1	1	1	1	1	1	1
3	1	1	1	1	1	1	1
4	1	1	1	1	1	1	1
5	1	1	1	1	1	1	1
6	2	2	2	2	2	1	1
7	2	2	2	2	2	1	1
8	2	2	2	2	2	1	1
9	2	2	2	2	2	1	1
10	2	2	2	2	2	1	1
11	2	2	2	2	2	2	1
12	2	2	2	2	2	2	2
13	2	2	2	2	2	2	2
14	2	2	2	2	2	2	2
15	2	2	2	2	2	2	2
16	2	2	2	2	2	2	2
17	2	2	2	2	2	2	2
18	2	1	1	2	2	1	2
19	1	1	1	1	1	1	1
20	1	1	1	1	1	1	1
21	1	1	1	1	1	1	1
22	1	1	1	1	1	1	1
23	1	1	1	1	1	1	1

NOTES:

1) THE NEW YORK STATE THRUWAY IS A LIMITED ACCESS, HIGH-SPEED, HIGH-VOLUME HIGHWAY. TRAFFIC SHALL BE MAINTAINED IN ACCORDANCE WITH THE *MANUAL ON UNIFORM TRAFFIC CONTROL DEVICES (MUTCD)*, THE *WORK ZONE TRAFFIC CONTROL PLANS*, AND THE *STANDARD SPECIFICATIONS* SECTION 619 AS AMENDED BY THE AUTHORITY.

2) LANE CLOSURES ON THE THRUWAY SHALL ONLY BE ALLOWED IN ACCORDANCE WITH THESE TRAFFIC MANAGEMENT TABLE(S), UNLESS INDICATED OTHERWISE IN THE CONTRACT PLANS OR PROPOSAL DOCUMENTS.

3) LANE CLOSURE CHARTS SHALL APPLY AS FOLLOWS:

- 1,150 VEH/HR/LANE: APPLIES TO ALL WORK REQUIRING LANE CLOSURE(S) EXCEPT AS PERMITTED BELOW.

- 1,300 VEH/HR/LANE: APPLIES TO NON-EVASIVE WORK WHERE WORKERS AND/OR EQUIPMENT ARE LOCATED 4 FT. OR MORE FROM TRAVEL (SPACE) LANE, OR AS APPROVED BY THE THRUWAY PROJECT ENGINEER. WORK SHOULD BE ABLE TO BE IMMEDIATELY STOPPED AND LANE CLOSURE(S) REMOVED IN THE EVENT QUEUES, GREATER THAN 1 MILE, DEVELOP.

NEW YORK STATE OF OPPORTUNITY. Thruway Authority

U.S. CUSTOMARY STANDARD SHEET

LANE CLOSURE CHARTS
1,300 VEHICLES PER HOUR
BUFFALO DIVISION
(SHEET 14 OF 37)

APPROVED SEPTEMBER 1, 2018

/S/ PATRICK THOMPSON, P.E.
DIRECTOR DESIGN SUPPORT SERVICES BUREAU

ISSUED UNDER DB 18-003

TA 619-37

I-90 WESTBOUND INTERCHANGES 56 TO 57 (1,300 VEH/HR/LANE)

LANES REQUIRED TO BE OPEN BY HOUR AND TIME OF DAY

SPRING SEASON MARCH 1 THRU MAY 20

HR/DAY	MON	TUES	WEDS	THUR	FRI	SAT	SUN
0	1	1	1	1	1	1	1
1	1	1	1	1	1	1	1
2	1	1	1	1	1	1	1
3	1	1	1	1	1	1	1
4	1	1	1	1	1	1	1
5	1	1	1	1	1	1	1
6	1	1	1	1	1	1	1
7	1	1	1	1	1	1	1
8	1	1	1	1	1	1	1
9	1	1	1	1	2	2	1
10	1	1	1	1	2	2	1
11	2	1	1	1	2	2	1
12	2	1	1	1	2	2	2
13	2	1	1	2	2	2	2
14	2	2	2	2	2	1	2
15	2	2	2	2	2	1	2
16	2	2	2	2	2	1	1
17	2	2	2	2	2	1	1
18	1	1	2	2	2	1	1
19	1	1	1	1	1	1	1
20	1	1	1	1	1	1	1
21	1	1	1	1	1	1	1
22	1	1	1	1	1	1	1
23	1	1	1	1	1	1	1

SUMMER SEASON MAY 21 THRU SEPTEMBER 15

HR/DAY	MON	TUES	WEDS	THUR	FRI	SAT	SUN
0	1	1	1	1	1	1	1
1	1	1	1	1	1	1	1
2	1	1	1	1	1	1	1
3	1	1	1	1	1	1	1
4	1	1	1	1	1	1	1
5	1	1	1	1	1	1	1
6	1	1	1	1	1	1	1
7	1	1	1	1	1	1	1
8	1	1	1	1	2	1	1
9	2	1	1	2	2	2	1
10	2	2	2	2	2	2	2
11	2	2	2	2	2	2	2
12	2	2	2	2	2	2	2
13	2	2	2	2	2	2	2
14	2	2	2	2	2	2	2
15	2	2	2	2	2	2	2
16	2	2	2	2	2	2	2
17	2	2	2	2	2	2	2
18	2	2	2	2	2	1	2
19	1	1	1	1	2	1	1
20	1	1	1	1	1	1	1
21	1	1	1	1	1	1	1
22	1	1	1	1	1	1	1
23	1	1	1	1	1	1	1

LANES REQUIRED TO BE OPEN BY HOUR AND TIME OF DAY

FALL SEASON SEPTEMBER 16 THRU November 30

HR/DAY	MON	TUES	WEDS	THUR	FRI	SAT	SUN
0	1	1	1	1	1	1	1
1	1	1	1	1	1	1	1
2	1	1	1	1	1	1	1
3	1	1	1	1	1	1	1
4	1	1	1	1	1	1	1
5	1	1	1	1	1	1	1
6	1	1	1	1	1	1	1
7	1	1	1	1	1	1	1
8	1	1	1	1	1	1	1
9	1	1	1	2	2	2	1
10	1	1	2	2	2	2	1
11	1	1	2	2	2	2	2
12	1	1	2	2	2	2	2
13	1	1	2	2	2	2	2
14	2	2	2	2	2	2	2
15	2	2	2	2	2	2	2
16	2	2	2	2	2	2	2
17	2	2	2	2	2	1	2
18	1	2	2	2	2	1	1
19	1	1	1	1	1	1	1
20	1	1	1	1	1	1	1
21	1	1	1	1	1	1	1
22	1	1	1	1	1	1	1
23	1	1	1	1	1	1	1

WINTER SEAS. DECEMBER 1 THRU February 28

HR/DAY	MON	TUES	WEDS	THUR	FRI	SAT	SUN
0	1	1	1	1	1	1	1
1	1	1	1	1	1	1	1
2	1	1	1	1	1	1	1
3	1	1	1	1	1	1	1
4	1	1	1	1	1	1	1
5	1	1	1	1	1	1	1
6	1	1	1	1	1	1	1
7	1	1	1	1	1	1	1
8	1	1	1	1	1	1	1
9	1	1	1	1	1	1	1
10	1	1	1	1	1	1	1
11	1	1	1	1	1	2	1
12	1	1	1	1	2	2	1
13	1	1	1	1	2	1	1
14	1	2	1	1	2	1	1
15	2	2	2	2	2	1	1
16	2	2	2	2	2	1	1
17	2	2	2	2	2	1	1
18	1	1	1	1	2	1	1
19	1	1	1	1	1	1	1
20	1	1	1	1	1	1	1
21	1	1	1	1	1	1	1
22	1	1	1	1	1	1	1
23	1	1	1	1	1	1	1

I-90 EASTBOUND INTERCHANGES 57 TO 56 (1,300 VEH/HR/LANE)

LANES REQUIRED TO BE OPEN BY HOUR AND TIME OF DAY

SPRING SEASON MARCH 1 THRU MAY 20

HR/DAY	MON	TUES	WEDS	THUR	FRI	SAT	SUN
0	1	1	1	1	1	1	1
1	1	1	1	1	1	1	1
2	1	1	1	1	1	1	1
3	1	1	1	1	1	1	1
4	1	1	1	1	1	1	1
5	1	1	1	1	1	1	1
6	2	2	2	2	2	1	1
7	2	2	2	2	2	1	1
8	2	2	2	2	2	1	1
9	1	1	1	1	1	1	1
10	1	1	1	1	1	1	1
11	1	1	1	1	1	1	1
12	1	1	1	1	2	2	2
13	2	1	1	1	2	2	2
14	2	1	1	2	2	2	2
15	2	2	2	2	2	2	2
16	2	2	2	2	2	2	2
17	2	1	2	2	2	1	2
18	2	1	1	1	2	1	2
19	1	1	1	1	1	1	2
20	1	1	1	1	1	1	1
21	1	1	1	1	1	1	1
22	1	1	1	1	1	1	1
23	1	1	1	1	1	1	1

SUMMER SEASON MAY 21 THRU SEPTEMBER 15

HR/DAY	MON	TUES	WEDS	THUR	FRI	SAT	SUN
0	1	1	1	1	1	1	1
1	1	1	1	1	1	1	1
2	1	1	1	1	1	1	1
3	1	1	1	1	1	1	1
4	1	1	1	1	1	1	1
5	1	1	1	1	1	1	1
6	2	2	2	2	2	1	1
7	2	2	2	2	2	1	1
8	2	2	2	2	2	1	1
9	2	1	1	1	1	1	1
10	1	1	1	1	2	2	1
11	2	1	2	2	2	2	2
12	2	2	2	2	2	2	2
13	2	2	2	2	2	2	2
14	2	2	2	2	2	2	2
15	2	2	2	2	2	2	2
16	2	2	2	2	2	2	2
17	2	2	2	2	2	2	2
18	2	1	2	2	2	2	2
19	1	1	1	1	2	1	2
20	1	1	1	1	1	1	2
21	1	1	1	1	1	1	2
22	1	1	1	1	1	1	1
23	1	1	1	1	1	1	1

LANES REQUIRED TO BE OPEN BY HOUR AND TIME OF DAY

FALL SEASON SEPTEMBER 16 THRU November 30

HR/DAY	MON	TUES	WEDS	THUR	FRI	SAT	SUN
0	1	1	1	1	1	1	1
1	1	1	1	1	1	1	1
2	1	1	1	1	1	1	1
3	1	1	1	1	1	1	1
4	1	1	1	1	1	1	1
5	1	1	1	1	1	1	1
6	2	2	2	2	2	1	1
7	2	2	2	2	2	1	1
8	2	2	2	2	2	1	1
9	1	1	1	1	1	1	1
10	1	1	1	1	1	1	1
11	1	1	1	1	1	2	2
12	1	1	1	1	1	2	2
13	2	1	1	2	2	2	2
14	2	2	2	2	2	2	2
15	2	2	2	2	2	2	2
16	2	2	2	2	2	2	2
17	2	2	2	2	2	2	2
18	1	1	1	1	2	1	2
19	2	1	1	1	1	1	2
20	1	1	1	1	1	1	1
21	1	1	1	1	1	1	1
22	1	1	1	1	1	1	1
23	1	1	1	1	1	1	1

WINTER SEAS. DECEMBER 1 THRU February 28

HR/DAY	MON	TUES	WEDS	THUR	FRI	SAT	SUN
0	1	1	1	1	1	1	1
1	1	1	1	1	1	1	1
2	1	1	1	1	1	1	1
3	1	1	1	1	1	1	1
4	1	1	1	1	1	1	1
5	1	1	1	1	1	1	1
6	2	2	2	2	2	1	1
7	2	2	2	2	2	1	1
8	2	2	2	2	2	1	1
9	1	1	1	1	1	1	1
10	1	1	1	1	1	1	1
11	1	1	1	1	1	1	1
12	1	1	1	1	1	1	1
13	1	1	1	1	1	1	1
14	2	1	1	1	2	2	1
15	2	2	2	2	2	1	2
16	2	2	2	2	2	1	1
17	1	1	1	2	2	1	1
18	1	1	1	1	1	1	1
19	1	1	1	1	1	1	1
20	1	1	1	1	1	1	1
21	1	1	1	1	1	1	1
22	1	1	1	1	1	1	1
23	1	1	1	1	1	1	1

NOTES:

1) THE NEW YORK STATE THRUWAY IS A LIMITED ACCESS, HIGH-SPEED, HIGH-VOLUME HIGHWAY. TRAFFIC SHALL BE MAINTAINED IN ACCORDANCE WITH THE *MANUAL ON UNIFORM TRAFFIC CONTROL DEVICES (MUTCD)*, THE *WORK ZONE TRAFFIC CONTROL PLANS*, AND THE *STANDARD SPECIFICATIONS* SECTION 619 AS AMENDED BY THE AUTHORITY.

2) LANE CLOSURES ON THE THRUWAY SHALL ONLY BE ALLOWED IN ACCORDANCE WITH THESE TRAFFIC MANAGEMENT TABLE(S), UNLESS INDICATED OTHERWISE IN THE CONTRACT PLANS OR PROPOSAL DOCUMENTS.

3) LANE CLOSURE CHARTS SHALL APPLY AS FOLLOWS:

- 1,150 VEH/HR/LANE: APPLIES TO ALL WORK REQUIRING LANE CLOSURE(S) EXCEPT AS PERMITTED BELOW.

- 1,300 VEH/HR/LANE: APPLIES TO NON-EVASIVE WORK WHERE WORKERS AND/OR EQUIPMENT ARE LOCATED 4 FT. OR MORE FROM TRAVEL (SPACE) LANE, OR AS APPROVED BY THE THRUWAY PROJECT ENGINEER. WORK SHOULD BE ABLE TO BE IMMEDIATELY STOPPED AND LANE CLOSURE(S) REMOVED IN THE EVENT QUEUES, GREATER THAN 1 MILE, DEVELOP.

NEW YORK STATE OF OPPORTUNITY. Thruway Authority

U.S. CUSTOMARY STANDARD SHEET

LANE CLOSURE CHARTS
1,300 VEHICLES PER HOUR
BUFFALO DIVISION
(SHEET 15 OF 37)

APPROVED SEPTEMBER 1, 2018

/S/ PATRICK THOMPSON, P.E.
DIRECTOR DESIGN SUPPORT SERVICES BUREAU

ISSUED UNDER DB 18-003

TA 619-37

I-90 WESTBOUND INTERCHANGES 57 TO 57A (1,300 VEH/HR/LANE)

LANES REQUIRED TO BE OPEN BY HOUR AND TIME OF DAY

SPRING SEASON MARCH 1 THRU MAY 20

HR/DAY	MON	TUES	WEDS	THUR	FRI	SAT	SUN
0	1	1	1	1	1	1	1
1	1	1	1	1	1	1	1
2	1	1	1	1	1	1	1
3	1	1	1	1	1	1	1
4	1	1	1	1	1	1	1
5	1	1	1	1	1	1	1
6	1	1	1	1	1	1	1
7	1	1	1	1	1	1	1
8	1	1	1	1	1	1	1
9	1	1	1	1	1	1	1
10	1	1	1	1	2	1	1
11	1	1	1	1	2	1	1
12	1	1	1	1	2	1	1
13	1	1	1	1	2	1	1
14	1	1	1	1	2	1	1
15	1	1	1	1	2	1	1
16	1	1	2	2	2	1	1
17	1	1	1	1	2	1	1
18	1	1	1	1	1	1	1
19	1	1	1	1	1	1	1
20	1	1	1	1	1	1	1
21	1	1	1	1	1	1	1
22	1	1	1	1	1	1	1
23	1	1	1	1	1	1	1

SUMMER SEASON MAY 21 THRU SEPTEMBER 15

HR/DAY	MON	TUES	WEDS	THUR	FRI	SAT	SUN
0	1	1	1	1	1	1	1
1	1	1	1	1	1	1	1
2	1	1	1	1	1	1	1
3	1	1	1	1	1	1	1
4	1	1	1	1	1	1	1
5	1	1	1	1	1	1	1
6	1	1	1	1	1	1	1
7	1	1	1	1	1	1	1
8	1	1	1	1	1	1	1
9	1	1	1	1	2	2	1
10	2	1	1	2	2	2	2
11	2	1	2	2	2	2	2
12	2	1	2	2	2	2	2
13	2	1	2	2	2	2	2
14	2	1	2	2	2	2	2
15	2	2	2	2	2	2	2
16	2	2	2	2	2	2	2
17	2	1	2	2	2	1	2
18	1	1	1	2	2	1	1
19	1	1	1	1	1	1	1
20	1	1	1	1	1	1	1
21	1	1	1	1	1	1	1
22	1	1	1	1	1	1	1
23	1	1	1	1	1	1	1

LANES REQUIRED TO BE OPEN BY HOUR AND TIME OF DAY

FALL SEASON SEPTEMBER 16 THRU November 30

HR/DAY	MON	TUES	WEDS	THUR	FRI	SAT	SUN
0	1	1	1	1	1	1	1
1	1	1	1	1	1	1	1
2	1	1	1	1	1	1	1
3	1	1	1	1	1	1	1
4	1	1	1	1	1	1	1
5	1	1	1	1	1	1	1
6	1	1	1	1	1	1	1
7	1	1	1	1	1	1	1
8	1	1	1	1	1	1	1
9	1	1	1	1	1	1	1
10	1	1	1	1	1	1	1
11	1	1	1	1	2	2	2
12	1	1	1	1	2	1	2
13	1	1	1	1	2	1	2
14	1	1	1	1	2	1	2
15	1	1	1	1	2	1	2
16	1	1	2	2	2	1	2
17	1	1	1	2	2	1	2
18	1	1	1	1	2	1	1
19	1	1	1	1	1	1	1
20	1	1	1	1	1	1	1
21	1	1	1	1	1	1	1
22	1	1	1	1	1	1	1
23	1	1	1	1	1	1	1

WINTER SEAS. DECEMBER 1 THRU February 28

HR/DAY	MON	TUES	WEDS	THUR	FRI	SAT	SUN
0	1	1	1	1	1	1	1
1	1	1	1	1	1	1	1
2	1	1	1	1	1	1	1
3	1	1	1	1	1	1	1
4	1	1	1	1	1	1	1
5	1	1	1	1	1	1	1
6	1	1	1	1	1	1	1
7	1	1	1	1	1	1	1
8	1	1	1	1	1	1	1
9	1	1	1	1	1	1	1
10	1	1	1	1	1	1	1
11	1	1	1	1	1	1	1
12	1	1	1	1	1	1	1
13	1	1	1	1	1	1	1
14	1	1	1	1	1	1	1
15	1	1	1	1	1	1	1
16	1	1	1	1	2	1	1
17	1	1	1	1	1	1	1
18	1	1	1	1	1	1	1
19	1	1	1	1	1	1	1
20	1	1	1	1	1	1	1
21	1	1	1	1	1	1	1
22	1	1	1	1	1	1	1
23	1	1	1	1	1	1	1

I-90 EASTBOUND INTERCHANGES 57A TO 57 (1,300 VEH/HR/LANE)

LANES REQUIRED TO BE OPEN BY HOUR AND TIME OF DAY

SPRING SEASON MARCH 1 THRU MAY 20

HR/DAY	MON	TUES	WEDS	THUR	FRI	SAT	SUN
0	1	1	1	1	1	1	1
1	1	1	1	1	1	1	1
2	1	1	1	1	1	1	1
3	1	1	1	1	1	1	1
4	1	1	1	1	1	1	1
5	1	1	1	1	1	1	1
6	1	1	1	1	1	1	1
7	1	1	1	1	1	1	1
8	1	1	1	1	1	1	1
9	1	1	1	1	1	1	1
10	1	1	1	1	1	1	1
11	1	1	1	1	1	1	1
12	1	1	1	1	1	1	1
13	1	1	1	1	1	1	2
14	2	1	1	1	2	1	2
15	2	1	1	1	2	1	2
16	2	1	1	1	2	1	2
17	2	1	1	1	2	1	2
18	1	1	1	1	1	1	2
19	1	1	1	1	1	1	1
20	1	1	1	1	1	1	1
21	1	1	1	1	1	1	1
22	1	1	1	1	1	1	1
23	1	1	1	1	1	1	1

SUMMER SEASON MAY 21 THRU SEPTEMBER 15

HR/DAY	MON	TUES	WEDS	THUR	FRI	SAT	SUN
0	1	1	1	1	1	1	1
1	1	1	1	1	1	1	1
2	1	1	1	1	1	1	1
3	1	1	1	1	1	1	1
4	1	1	1	1	1	1	1
5	1	1	1	1	1	1	1
6	1	1	1	1	1	1	1
7	1	1	1	1	1	1	1
8	1	1	1	1	1	1	1
9	1	1	1	1	1	1	1
10	1	1	1	1	1	2	1
11	1	1	1	1	2	2	2
12	2	1	1	1	2	2	2
13	2	1	1	2	2	2	2
14	2	1	2	2	2	2	2
15	2	2	2	2	2	2	2
16	2	2	2	2	2	2	2
17	2	1	2	2	2	2	2
18	1	1	1	1	2	1	2
19	1	1	1	1	1	1	2
20	1	1	1	1	1	1	2
21	1	1	1	1	1	1	1
22	1	1	1	1	1	1	1
23	1	1	1	1	1	1	1

LANES REQUIRED TO BE OPEN BY HOUR AND TIME OF DAY

FALL SEASON SEPTEMBER 16 THRU November 30

HR/DAY	MON	TUES	WEDS	THUR	FRI	SAT	SUN
0	1	1	1	1	1	1	1
1	1	1	1	1	1	1	1
2	1	1	1	1	1	1	1
3	1	1	1	1	1	1	1
4	1	1	1	1	1	1	1
5	1	1	1	1	1	1	1
6	1	1	1	1	1	1	1
7	1	1	1	1	1	1	1
8	1	1	1	1	1	1	1
9	1	1	1	1	1	1	1
10	1	1	1	1	1	1	1
11	1	1	1	1	1	1	2
12	1	1	1	1	1	1	2
13	1	1	1	1	1	1	2
14	2	1	1	1	2	2	2
15	2	1	2	1	2	1	2
16	2	1	2	2	2	1	2
17	1	1	1	1	2	1	2
18	1	1	1	1	1	1	2
19	1	1	1	1	1	1	1
20	1	1	1	1	1	1	1
21	1	1	1	1	1	1	1
22	1	1	1	1	1	1	1
23	1	1	1	1	1	1	1

WINTER SEAS. DECEMBER 1 THRU February 28

HR/DAY	MON	TUES	WEDS	THUR	FRI	SAT	SUN
0	1	1	1	1	1	1	1
1	1	1	1	1	1	1	1
2	1	1	1	1	1	1	1
3	1	1	1	1	1	1	1
4	1	1	1	1	1	1	1
5	1	1	1	1	1	1	1
6	1	1	1	1	1	1	1
7	1	1	1	1	1	1	1
8	1	1	1	1	1	1	1
9	1	1	1	1	1	1	1
10	1	1	1	1	1	1	1
11	1	1	1	1	1	1	1
12	1	1	1	1	1	1	1
13	1	1	1	1	1	1	1
14	1	1	1	1	1	1	1
15	1	1	1	1	2	1	1
16	1	1	1	1	2	1	1
17	1	1	1	1	1	1	1
18	1	1	1	1	1	1	1
19	1	1	1	1	1	1	1
20	1	1	1	1	1	1	1
21	1	1	1	1	1	1	1
22	1	1	1	1	1	1	1
23	1	1	1	1	1	1	1

NOTES:

1) THE NEW YORK STATE THRUWAY IS A LIMITED ACCESS, HIGH-SPEED, HIGH-VOLUME HIGHWAY. TRAFFIC SHALL BE MAINTAINED IN ACCORDANCE WITH THE *MANUAL ON UNIFORM TRAFFIC CONTROL DEVICES (MUTCD)*, THE *WORK ZONE TRAFFIC CONTROL PLANS*, AND THE *STANDARD SPECIFICATIONS* SECTION 619 AS AMENDED BY THE AUTHORITY.

2) LANE CLOSURES ON THE THRUWAY SHALL ONLY BE ALLOWED IN ACCORDANCE WITH THESE TRAFFIC MANAGEMENT TABLE(S), UNLESS INDICATED OTHERWISE IN THE CONTRACT PLANS OR PROPOSAL DOCUMENTS.

3) LANE CLOSURE CHARTS SHALL APPLY AS FOLLOWS:

- 1,150 VEH/HR/LANE: APPLIES TO ALL WORK REQUIRING LANE CLOSURE(S) EXCEPT AS PERMITTED BELOW.

- 1,300 VEH/HR/LANE: APPLIES TO NON-EVASIVE WORK WHERE WORKERS AND/OR EQUIPMENT ARE LOCATED 4 FT. OR MORE FROM TRAVEL (SPACE) LANE, OR AS APPROVED BY THE THRUWAY PROJECT ENGINEER. WORK SHOULD BE ABLE TO BE IMMEDIATELY STOPPED AND LANE CLOSURE(S) REMOVED IN THE EVENT QUEUES, GREATER THAN 1 MILE, DEVELOP.

NEW YORK STATE OF OPPORTUNITY. Thruway Authority

U.S. CUSTOMARY STANDARD SHEET

LANE CLOSURE CHARTS
1,300 VEHICLES PER HOUR
BUFFALO DIVISION
(SHEET 16 OF 37)

APPROVED SEPTEMBER 1, 2018

/S/ PATRICK THOMPSON, P.E.
DIRECTOR DESIGN SUPPORT SERVICES BUREAU

ISSUED UNDER DB 18-003

TA 619-37

I-90 WESTBOUND INTERCHANGES 57A TO 58 (1,300 VEH/HR/LANE)

LANES REQUIRED TO BE OPEN BY HOUR AND TIME OF DAY

SPRING SEASON MARCH 1 THRU MAY 20

HR/DAY	MON	TUES	WEDS	THUR	FRI	SAT	SUN
0	1	1	1	1	1	1	1
1	1	1	1	1	1	1	1
2	1	1	1	1	1	1	1
3	1	1	1	1	1	1	1
4	1	1	1	1	1	1	1
5	1	1	1	1	1	1	1
6	1	1	1	1	1	1	1
7	1	1	1	1	1	1	1
8	1	1	1	1	1	1	1
9	1	1	1	1	1	1	1
10	1	1	1	1	1	1	1
11	1	1	1	1	2	1	1
12	1	1	1	1	2	1	1
13	1	1	1	1	2	1	1
14	1	1	1	1	2	1	1
15	1	1	1	1	2	1	1
16	1	1	1	1	2	1	1
17	1	1	1	1	1	1	1
18	1	1	1	1	1	1	1
19	1	1	1	1	1	1	1
20	1	1	1	1	1	1	1
21	1	1	1	1	1	1	1
22	1	1	1	1	1	1	1
23	1	1	1	1	1	1	1

SUMMER SEASON MAY 21 THRU SEPTEMBER 15

HR/DAY	MON	TUES	WEDS	THUR	FRI	SAT	SUN
0	1	1	1	1	1	1	1
1	1	1	1	1	1	1	1
2	1	1	1	1	1	1	1
3	1	1	1	1	1	1	1
4	1	1	1	1	1	1	1
5	1	1	1	1	1	1	1
6	1	1	1	1	1	1	1
7	1	1	1	1	1	1	1
8	1	1	1	1	1	1	1
9	1	1	1	1	2	2	1
10	1	1	1	2	2	2	2
11	2	1	2	2	2	2	2
12	2	1	1	2	2	2	2
13	2	1	1	2	2	2	2
14	1	1	1	2	2	2	2
15	2	1	1	2	2	2	2
16	1	1	1	1	2	1	2
17	1	1	1	1	2	1	1
18	1	1	1	1	2	1	1
19	1	1	1	1	1	1	1
20	1	1	1	1	1	1	1
21	1	1	1	1	1	1	1
22	1	1	1	1	1	1	1
23	1	1	1	1	1	1	1

LANES REQUIRED TO BE OPEN BY HOUR AND TIME OF DAY

FALL SEASON SEPTEMBER 16 THRU November 30

HR/DAY	MON	TUES	WEDS	THUR	FRI	SAT	SUN
0	1	1	1	1	1	1	1
1	1	1	1	1	1	1	1
2	1	1	1	1	1	1	1
3	1	1	1	1	1	1	1
4	1	1	1	1	1	1	1
5	1	1	1	1	1	1	1
6	1	1	1	1	1	1	1
7	1	1	1	1	1	1	1
8	1	1	1	1	1	1	1
9	1	1	1	1	1	1	1
10	1	1	1	1	1	1	1
11	1	1	1	1	1	1	2
12	1	1	1	1	2	1	2
13	1	1	1	1	2	1	2
14	1	1	1	1	2	1	2
15	1	1	1	1	2	1	2
16	1	1	1	1	2	1	2
17	1	1	1	1	2	1	2
18	1	1	1	1	1	1	1
19	1	1	1	1	1	1	1
20	1	1	1	1	1	1	1
21	1	1	1	1	1	1	1
22	1	1	1	1	1	1	1
23	1	1	1	1	1	1	1

WINTER SEAS. DECEMBER 1 THRU February 28

HR/DAY	MON	TUES	WEDS	THUR	FRI	SAT	SUN
0	1	1	1	1	1	1	1
1	1	1	1	1	1	1	1
2	1	1	1	1	1	1	1
3	1	1	1	1	1	1	1
4	1	1	1	1	1	1	1
5	1	1	1	1	1	1	1
6	1	1	1	1	1	1	1
7	1	1	1	1	1	1	1
8	1	1	1	1	1	1	1
9	1	1	1	1	1	1	1
10	1	1	1	1	1	1	1
11	1	1	1	1	1	1	1
12	1	1	1	1	1	1	1
13	1	1	1	1	1	1	1
14	1	1	1	1	1	1	1
15	1	1	1	1	1	1	1
16	1	1	1	1	1	1	1
17	1	1	1	1	1	1	1
18	1	1	1	1	1	1	1
19	1	1	1	1	1	1	1
20	1	1	1	1	1	1	1
21	1	1	1	1	1	1	1
22	1	1	1	1	1	1	1
23	1	1	1	1	1	1	1

I-90 EASTBOUND INTERCHANGES 58 TO 57A (1,300 VEH/HR/LANE)

LANES REQUIRED TO BE OPEN BY HOUR AND TIME OF DAY

SPRING SEASON MARCH 1 THRU MAY 20

HR/DAY	MON	TUES	WEDS	THUR	FRI	SAT	SUN
0	1	1	1	1	1	1	1
1	1	1	1	1	1	1	1
2	1	1	1	1	1	1	1
3	1	1	1	1	1	1	1
4	1	1	1	1	1	1	1
5	1	1	1	1	1	1	1
6	1	1	1	1	1	1	1
7	1	1	1	1	1	1	1
8	1	1	1	1	1	1	1
9	1	1	1	1	1	1	1
10	1	1	1	1	1	1	1
11	1	1	1	1	1	1	1
12	1	1	1	1	1	1	1
13	1	1	1	1	1	1	2
14	1	1	1	1	1	1	2
15	2	1	1	1	2	1	2
16	2	1	1	1	2	1	2
17	1	1	1	1	2	1	2
18	1	1	1	1	1	1	2
19	1	1	1	1	1	1	1
20	1	1	1	1	1	1	1
21	1	1	1	1	1	1	1
22	1	1	1	1	1	1	1
23	1	1	1	1	1	1	1

SUMMER SEASON MAY 21 THRU SEPTEMBER 15

HR/DAY	MON	TUES	WEDS	THUR	FRI	SAT	SUN
0	1	1	1	1	1	1	1
1	1	1	1	1	1	1	1
2	1	1	1	1	1	1	1
3	1	1	1	1	1	1	1
4	1	1	1	1	1	1	1
5	1	1	1	1	1	1	1
6	1	1	1	1	1	1	1
7	1	1	1	1	1	1	1
8	1	1	1	1	1	1	1
9	1	1	1	1	1	1	1
10	1	1	1	1	1	1	1
11	1	1	1	1	2	2	2
12	1	1	1	1	2	2	2
13	2	1	1	2	2	2	2
14	2	1	1	2	2	2	2
15	2	2	2	2	2	2	2
16	2	2	2	2	2	1	2
17	2	1	1	2	2	1	2
18	1	1	1	1	2	1	2
19	1	1	1	1	1	1	2
20	1	1	1	1	1	1	2
21	1	1	1	1	1	1	1
22	1	1	1	1	1	1	1
23	1	1	1	1	1	1	1

LANES REQUIRED TO BE OPEN BY HOUR AND TIME OF DAY

FALL SEASON SEPTEMBER 16 THRU November 30

HR/DAY	MON	TUES	WEDS	THUR	FRI	SAT	SUN
0	1	1	1	1	1	1	1
1	1	1	1	1	1	1	1
2	1	1	1	1	1	1	1
3	1	1	1	1	1	1	1
4	1	1	1	1	1	1	1
5	1	1	1	1	1	1	1
6	1	1	1	1	1	1	1
7	1	1	1	1	1	1	1
8	1	1	1	1	1	1	1
9	1	1	1	1	1	1	1
10	1	1	1	1	1	1	1
11	1	1	1	1	1	1	1
12	1	1	1	1	1	1	2
13	1	1	1	1	1	1	2
14	1	1	1	1	1	1	2
15	1	1	1	1	2	1	2
16	1	1	1	1	2	1	2
17	1	1	1	1	2	1	2
18	1	1	1	1	1	1	2
19	1	1	1	1	1	1	1
20	1	1	1	1	1	1	1
21	1	1	1	1	1	1	1
22	1	1	1	1	1	1	1
23	1	1	1	1	1	1	1

WINTER SEAS. DECEMBER 1 THRU February 28

HR/DAY	MON	TUES	WEDS	THUR	FRI	SAT	SUN
0	1	1	1	1	1	1	1
1	1	1	1	1	1	1	1
2	1	1	1	1	1	1	1
3	1	1	1	1	1	1	1
4	1	1	1	1	1	1	1
5	1	1	1	1	1	1	1
6	1	1	1	1	1	1	1
7	1	1	1	1	1	1	1
8	1	1	1	1	1	1	1
9	1	1	1	1	1	1	1
10	1	1	1	1	1	1	1
11	1	1	1	1	1	1	1
12	1	1	1	1	1	1	1
13	1	1	1	1	1	1	1
14	1	1	1	1	1	1	1
15	1	1	1	1	1	1	1
16	1	1	1	1	1	1	1
17	1	1	1	1	1	1	1
18	1	1	1	1	1	1	1
19	1	1	1	1	1	1	1
20	1	1	1	1	1	1	1
21	1	1	1	1	1	1	1
22	1	1	1	1	1	1	1
23	1	1	1	1	1	1	1

NOTES:

1) THE NEW YORK STATE THRUWAY IS A LIMITED ACCESS, HIGH-SPEED, HIGH-VOLUME HIGHWAY. TRAFFIC SHALL BE MAINTAINED IN ACCORDANCE WITH THE *MANUAL ON UNIFORM TRAFFIC CONTROL DEVICES (MUTCD)*, THE *WORK ZONE TRAFFIC CONTROL PLANS*, AND THE *STANDARD SPECIFICATIONS* SECTION 619 AS AMENDED BY THE AUTHORITY.

2) LANE CLOSURES ON THE THRUWAY SHALL ONLY BE ALLOWED IN ACCORDANCE WITH THESE TRAFFIC MANAGEMENT TABLE(S), UNLESS INDICATED OTHERWISE IN THE CONTRACT PLANS OR PROPOSAL DOCUMENTS.

3) LANE CLOSURE CHARTS SHALL APPLY AS FOLLOWS:

- 1,150 VEH/HR/LANE: APPLIES TO ALL WORK REQUIRING LANE CLOSURE(S) EXCEPT AS PERMITTED BELOW.

- 1,300 VEH/HR/LANE: APPLIES TO NON-EVASIVE WORK WHERE WORKERS AND/OR EQUIPMENT ARE LOCATED 4 FT. OR MORE FROM TRAVEL (SPACE) LANE, OR AS APPROVED BY THE THRUWAY PROJECT ENGINEER. WORK SHOULD BE ABLE TO BE IMMEDIATELY STOPPED AND LANE CLOSURE(S) REMOVED IN THE EVENT QUEUES, GREATER THAN 1 MILE, DEVELOP.

NEW YORK STATE OF OPPORTUNITY. Thruway Authority

U.S. CUSTOMARY STANDARD SHEET

LANE CLOSURE CHARTS
1,300 VEHICLES PER HOUR
BUFFALO DIVISION
(SHEET 17 OF 37)

APPROVED SEPTEMBER 1, 2018

/S/ PATRICK THOMPSON, P.E.
DIRECTOR DESIGN SUPPORT SERVICES BUREAU

ISSUED UNDER DB 18-003

TA 619-37

I-90 WESTBOUND INTERCHANGES 58 TO 59 (1,300 VEH/HR/LANE)

LANES REQUIRED TO BE OPEN BY HOUR AND TIME OF DAY

SPRING SEASON MARCH 1 THRU MAY 20

HR/DAY	MON	TUES	WEDS	THUR	FRI	SAT	SUN
0	1	1	1	1	1	1	1
1	1	1	1	1	1	1	1
2	1	1	1	1	1	1	1
3	1	1	1	1	1	1	1
4	1	1	1	1	1	1	1
5	1	1	1	1	1	1	1
6	1	1	1	1	1	1	1
7	1	1	1	1	1	1	1
8	1	1	1	1	1	1	1
9	1	1	1	1	1	1	1
10	1	1	1	1	1	1	1
11	1	1	1	1	1	1	1
12	1	1	1	1	1	1	1
13	1	1	1	1	1	1	1
14	1	1	1	1	1	1	1
15	1	1	1	1	1	1	1
16	1	1	1	1	1	1	1
17	1	1	1	1	1	1	1
18	1	1	1	1	1	1	1
19	1	1	1	1	1	1	1
20	1	1	1	1	1	1	1
21	1	1	1	1	1	1	1
22	1	1	1	1	1	1	1
23	1	1	1	1	1	1	1

SUMMER SEASON MAY 21 THRU SEPTEMBER 15

HR/DAY	MON	TUES	WEDS	THUR	FRI	SAT	SUN
0	1	1	1	1	1	1	1
1	1	1	1	1	1	1	1
2	1	1	1	1	1	1	1
3	1	1	1	1	1	1	1
4	1	1	1	1	1	1	1
5	1	1	1	1	1	1	1
6	1	1	1	1	1	1	1
7	1	1	1	1	1	1	1
8	1	1	1	1	1	1	1
9	1	1	1	1	1	2	1
10	1	1	1	1	2	2	2
11	1	1	1	1	2	2	2
12	1	1	1	1	2	2	2
13	1	1	1	1	2	2	2
14	1	1	1	1	2	2	2
15	1	1	1	1	2	1	2
16	1	1	1	1	2	1	2
17	1	1	1	1	2	1	1
18	1	1	1	1	2	1	1
19	1	1	1	1	1	1	1
20	1	1	1	1	1	1	1
21	1	1	1	1	1	1	1
22	1	1	1	1	1	1	1
23	1	1	1	1	1	1	1

LANES REQUIRED TO BE OPEN BY HOUR AND TIME OF DAY

FALL SEASON SEPTEMBER 16 THRU November 30

HR/DAY	MON	TUES	WEDS	THUR	FRI	SAT	SUN
0	1	1	1	1	1	1	1
1	1	1	1	1	1	1	1
2	1	1	1	1	1	1	1
3	1	1	1	1	1	1	1
4	1	1	1	1	1	1	1
5	1	1	1	1	1	1	1
6	1	1	1	1	1	1	1
7	1	1	1	1	1	1	1
8	1	1	1	1	1	1	1
9	1	1	1	1	1	1	1
10	1	1	1	1	1	1	1
11	1	1	1	1	1	1	2
12	1	1	1	1	2	1	2
13	1	1	1	1	2	1	2
14	1	1	1	1	2	1	2
15	1	1	1	1	2	1	2
16	1	1	1	1	2	1	2
17	1	1	1	1	2	1	2
18	1	1	1	1	1	1	1
19	1	1	1	1	1	1	1
20	1	1	1	1	1	1	1
21	1	1	1	1	1	1	1
22	1	1	1	1	1	1	1
23	1	1	1	1	1	1	1

WINTER SEAS. DECEMBER 1 THRU February 28

HR/DAY	MON	TUES	WEDS	THUR	FRI	SAT	SUN
0	1	1	1	1	1	1	1
1	1	1	1	1	1	1	1
2	1	1	1	1	1	1	1
3	1	1	1	1	1	1	1
4	1	1	1	1	1	1	1
5	1	1	1	1	1	1	1
6	1	1	1	1	1	1	1
7	1	1	1	1	1	1	1
8	1	1	1	1	1	1	1
9	1	1	1	1	1	1	1
10	1	1	1	1	1	1	1
11	1	1	1	1	1	1	1
12	1	1	1	1	1	1	1
13	1	1	1	1	1	1	1
14	1	1	1	1	1	1	1
15	1	1	1	1	1	1	1
16	1	1	1	1	1	1	1
17	1	1	1	1	1	1	1
18	1	1	1	1	1	1	1
19	1	1	1	1	1	1	1
20	1	1	1	1	1	1	1
21	1	1	1	1	1	1	1
22	1	1	1	1	1	1	1
23	1	1	1	1	1	1	1

I-90 EASTBOUND INTERCHANGES 59 TO 58 (1,300 VEH/HR/LANE)

LANES REQUIRED TO BE OPEN BY HOUR AND TIME OF DAY

SPRING SEASON MARCH 1 THRU MAY 20

HR/DAY	MON	TUES	WEDS	THUR	FRI	SAT	SUN
0	1	1	1	1	1	1	1
1	1	1	1	1	1	1	1
2	1	1	1	1	1	1	1
3	1	1	1	1	1	1	1
4	1	1	1	1	1	1	1
5	1	1	1	1	1	1	1
6	1	1	1	1	1	1	1
7	1	1	1	1	1	1	1
8	1	1	1	1	1	1	1
9	1	1	1	1	1	1	1
10	1	1	1	1	1	1	1
11	1	1	1	1	1	1	1
12	1	1	1	1	1	1	1
13	1	1	1	1	1	1	1
14	1	1	1	1	1	1	2
15	2	1	1	1	2	1	2
16	2	1	1	1	2	1	2
17	1	1	1	1	1	1	2
18	1	1	1	1	1	1	1
19	1	1	1	1	1	1	1
20	1	1	1	1	1	1	1
21	1	1	1	1	1	1	1
22	1	1	1	1	1	1	1
23	1	1	1	1	1	1	1

SUMMER SEASON MAY 21 THRU SEPTEMBER 15

HR/DAY	MON	TUES	WEDS	THUR	FRI	SAT	SUN
0	1	1	1	1	1	1	1
1	1	1	1	1	1	1	1
2	1	1	1	1	1	1	1
3	1	1	1	1	1	1	1
4	1	1	1	1	1	1	1
5	1	1	1	1	1	1	1
6	1	1	1	1	1	1	1
7	1	1	1	1	1	1	1
8	1	1	1	1	1	1	1
9	1	1	1	1	1	1	1
10	1	1	1	1	1	1	1
11	1	1	1	1	2	2	2
12	1	1	1	1	2	2	2
13	1	1	1	1	2	2	2
14	2	1	1	2	2	2	2
15	2	1	1	2	2	2	2
16	2	1	1	2	2	1	2
17	1	1	1	1	2	1	2
18	1	1	1	1	1	1	2
19	1	1	1	1	1	1	2
20	1	1	1	1	1	1	1
21	1	1	1	1	1	1	1
22	1	1	1	1	1	1	1
23	1	1	1	1	1	1	1

LANES REQUIRED TO BE OPEN BY HOUR AND TIME OF DAY

FALL SEASON SEPTEMBER 16 THRU November 30

HR/DAY	MON	TUES	WEDS	THUR	FRI	SAT	SUN
0	1	1	1	1	1	1	1
1	1	1	1	1	1	1	1
2	1	1	1	1	1	1	1
3	1	1	1	1	1	1	1
4	1	1	1	1	1	1	1
5	1	1	1	1	1	1	1
6	1	1	1	1	1	1	1
7	1	1	1	1	1	1	1
8	1	1	1	1	1	1	1
9	1	1	1	1	1	1	1
10	1	1	1	1	1	1	1
11	1	1	1	1	1	1	1
12	1	1	1	1	1	1	2
13	1	1	1	1	1	1	2
14	1	1	1	1	1	1	2
15	1	1	1	1	2	1	2
16	1	1	1	1	2	1	2
17	1	1	1	1	2	1	2
18	1	1	1	1	1	1	2
19	1	1	1	1	1	1	1
20	1	1	1	1	1	1	1
21	1	1	1	1	1	1	1
22	1	1	1	1	1	1	1
23	1	1	1	1	1	1	1

WINTER SEAS. DECEMBER 1 THRU February 28

HR/DAY	MON	TUES	WEDS	THUR	FRI	SAT	SUN
0	1	1	1	1	1	1	1
1	1	1	1	1	1	1	1
2	1	1	1	1	1	1	1
3	1	1	1	1	1	1	1
4	1	1	1	1	1	1	1
5	1	1	1	1	1	1	1
6	1	1	1	1	1	1	1
7	1	1	1	1	1	1	1
8	1	1	1	1	1	1	1
9	1	1	1	1	1	1	1
10	1	1	1	1	1	1	1
11	1	1	1	1	1	1	1
12	1	1	1	1	1	1	1
13	1	1	1	1	1	1	1
14	1	1	1	1	1	1	1
15	1	1	1	1	1	1	1
16	1	1	1	1	1	1	1
17	1	1	1	1	1	1	1
18	1	1	1	1	1	1	1
19	1	1	1	1	1	1	1
20	1	1	1	1	1	1	1
21	1	1	1	1	1	1	1
22	1	1	1	1	1	1	1
23	1	1	1	1	1	1	1

NOTES:

1) THE NEW YORK STATE THRUWAY IS A LIMITED ACCESS, HIGH-SPEED, HIGH-VOLUME HIGHWAY. TRAFFIC SHALL BE MAINTAINED IN ACCORDANCE WITH THE *MANUAL ON UNIFORM TRAFFIC CONTROL DEVICES (MUTCD)*, THE *WORK ZONE TRAFFIC CONTROL PLANS*, AND THE *STANDARD SPECIFICATIONS* SECTION 619 AS AMENDED BY THE AUTHORITY.

2) LANE CLOSURES ON THE THRUWAY SHALL ONLY BE ALLOWED IN ACCORDANCE WITH THESE TRAFFIC MANAGEMENT TABLE(S), UNLESS INDICATED OTHERWISE IN THE CONTRACT PLANS OR PROPOSAL DOCUMENTS.

3) LANE CLOSURE CHARTS SHALL APPLY AS FOLLOWS:

- 1,150 VEH/HR/LANE: APPLIES TO ALL WORK REQUIRING LANE CLOSURE(S) EXCEPT AS PERMITTED BELOW.

- 1,300 VEH/HR/LANE: APPLIES TO NON-EVASIVE WORK WHERE WORKERS AND/OR EQUIPMENT ARE LOCATED 4 FT. OR MORE FROM TRAVEL (SPACE) LANE, OR AS APPROVED BY THE THRUWAY PROJECT ENGINEER. WORK SHOULD BE ABLE TO BE IMMEDIATELY STOPPED AND LANE CLOSURE(S) REMOVED IN THE EVENT QUEUES, GREATER THAN 1 MILE, DEVELOP.

NEW YORK STATE OF OPPORTUNITY. Thruway Authority

U.S. CUSTOMARY STANDARD SHEET

LANE CLOSURE CHARTS
1,300 VEHICLES PER HOUR
BUFFALO DIVISION
(SHEET 18 OF 37)

APPROVED SEPTEMBER 1, 2018

/S/ PATRICK THOMPSON, P.E.
DIRECTOR DESIGN SUPPORT SERVICES BUREAU

ISSUED UNDER DB 18-003

TA 619-37

I-90 WESTBOUND INTERCHANGES 59 TO 60 (1,300 VEH/HR/LANE)

LANES REQUIRED TO BE OPEN BY HOUR AND TIME OF DAY

SPRING SEASON MARCH 1 THRU MAY 20

HR/DAY	MON	TUES	WEDS	THUR	FRI	SAT	SUN
0	1	1	1	1	1	1	1
1	1	1	1	1	1	1	1
2	1	1	1	1	1	1	1
3	1	1	1	1	1	1	1
4	1	1	1	1	1	1	1
5	1	1	1	1	1	1	1
6	1	1	1	1	1	1	1
7	1	1	1	1	1	1	1
8	1	1	1	1	1	1	1
9	1	1	1	1	1	1	1
10	1	1	1	1	1	1	1
11	1	1	1	1	1	1	1
12	1	1	1	1	1	1	1
13	1	1	1	1	1	1	1
14	1	1	1	1	1	1	1
15	1	1	1	1	1	1	1
16	1	1	1	1	1	1	1
17	1	1	1	1	1	1	1
18	1	1	1	1	1	1	1
19	1	1	1	1	1	1	1
20	1	1	1	1	1	1	1
21	1	1	1	1	1	1	1
22	1	1	1	1	1	1	1
23	1	1	1	1	1	1	1

SUMMER SEASON MAY 21 THRU SEPTEMBER 15

HR/DAY	MON	TUES	WEDS	THUR	FRI	SAT	SUN
0	1	1	1	1	1	1	1
1	1	1	1	1	1	1	1
2	1	1	1	1	1	1	1
3	1	1	1	1	1	1	1
4	1	1	1	1	1	1	1
5	1	1	1	1	1	1	1
6	1	1	1	1	1	1	1
7	1	1	1	1	1	1	1
8	1	1	1	1	1	1	1
9	1	1	1	1	1	1	1
10	1	1	1	1	1	1	1
11	1	1	1	1	1	1	2
12	1	1	1	1	1	1	2
13	1	1	1	1	1	1	2
14	1	1	1	1	1	1	2
15	1	1	1	1	1	1	1
16	1	1	1	1	1	1	1
17	1	1	1	1	1	1	1
18	1	1	1	1	1	1	1
19	1	1	1	1	1	1	1
20	1	1	1	1	1	1	1
21	1	1	1	1	1	1	1
22	1	1	1	1	1	1	1
23	1	1	1	1	1	1	1

LANES REQUIRED TO BE OPEN BY HOUR AND TIME OF DAY

FALL SEASON SEPTEMBER 16 THRU November 30

HR/DAY	MON	TUES	WEDS	THUR	FRI	SAT	SUN
0	1	1	1	1	1	1	1
1	1	1	1	1	1	1	1
2	1	1	1	1	1	1	1
3	1	1	1	1	1	1	1
4	1	1	1	1	1	1	1
5	1	1	1	1	1	1	1
6	1	1	1	1	1	1	1
7	1	1	1	1	1	1	1
8	1	1	1	1	1	1	1
9	1	1	1	1	1	1	1
10	1	1	1	1	1	1	1
11	1	1	1	1	1	1	1
12	1	1	1	1	1	1	1
13	1	1	1	1	1	1	1
14	1	1	1	1	1	1	1
15	1	1	1	1	1	1	1
16	1	1	1	1	1	1	1
17	1	1	1	1	1	1	1
18	1	1	1	1	1	1	1
19	1	1	1	1	1	1	1
20	1	1	1	1	1	1	1
21	1	1	1	1	1	1	1
22	1	1	1	1	1	1	1
23	1	1	1	1	1	1	1

WINTER SEAS. DECEMBER 1 THRU February 28

HR/DAY	MON	TUES	WEDS	THUR	FRI	SAT	SUN
0	1	1	1	1	1	1	1
1	1	1	1	1	1	1	1
2	1	1	1	1	1	1	1
3	1	1	1	1	1	1	1
4	1	1	1	1	1	1	1
5	1	1	1	1	1	1	1
6	1	1	1	1	1	1	1
7	1	1	1	1	1	1	1
8	1	1	1	1	1	1	1
9	1	1	1	1	1	1	1
10	1	1	1	1	1	1	1
11	1	1	1	1	1	1	1
12	1	1	1	1	1	1	1
13	1	1	1	1	1	1	1
14	1	1	1	1	1	1	1
15	1	1	1	1	1	1	1
16	1	1	1	1	1	1	1
17	1	1	1	1	1	1	1
18	1	1	1	1	1	1	1
19	1	1	1	1	1	1	1
20	1	1	1	1	1	1	1
21	1	1	1	1	1	1	1
22	1	1	1	1	1	1	1
23	1	1	1	1	1	1	1

I-90 EASTBOUND INTERCHANGES 60 TO 59 (1,300 VEH/HR/LANE)

LANES REQUIRED TO BE OPEN BY HOUR AND TIME OF DAY

SPRING SEASON MARCH 1 THRU MAY 20

HR/DAY	MON	TUES	WEDS	THUR	FRI	SAT	SUN
0	1	1	1	1	1	1	1
1	1	1	1	1	1	1	1
2	1	1	1	1	1	1	1
3	1	1	1	1	1	1	1
4	1	1	1	1	1	1	1
5	1	1	1	1	1	1	1
6	1	1	1	1	1	1	1
7	1	1	1	1	1	1	1
8	1	1	1	1	1	1	1
9	1	1	1	1	1	1	1
10	1	1	1	1	1	1	1
11	1	1	1	1	1	1	1
12	1	1	1	1	1	1	1
13	1	1	1	1	1	1	1
14	1	1	1	1	1	1	1
15	1	1	1	1	1	1	1
16	1	1	1	1	1	1	1
17	1	1	1	1	1	1	1
18	1	1	1	1	1	1	1
19	1	1	1	1	1	1	1
20	1	1	1	1	1	1	1
21	1	1	1	1	1	1	1
22	1	1	1	1	1	1	1
23	1	1	1	1	1	1	1

SUMMER SEASON MAY 21 THRU SEPTEMBER 15

HR/DAY	MON	TUES	WEDS	THUR	FRI	SAT	SUN
0	1	1	1	1	1	1	1
1	1	1	1	1	1	1	1
2	1	1	1	1	1	1	1
3	1	1	1	1	1	1	1
4	1	1	1	1	1	1	1
5	1	1	1	1	1	1	1
6	1	1	1	1	1	1	1
7	1	1	1	1	1	1	1
8	1	1	1	1	1	1	1
9	1	1	1	1	1	1	1
10	1	1	1	1	1	1	1
11	1	1	1	1	1	1	1
12	1	1	1	1	1	1	1
13	1	1	1	1	1	1	2
14	1	1	1	1	1	1	2
15	1	1	1	1	1	1	2
16	1	1	1	1	1	1	2
17	1	1	1	1	1	1	2
18	1	1	1	1	1	1	1
19	1	1	1	1	1	1	1
20	1	1	1	1	1	1	1
21	1	1	1	1	1	1	1
22	1	1	1	1	1	1	1
23	1	1	1	1	1	1	1

LANES REQUIRED TO BE OPEN BY HOUR AND TIME OF DAY

FALL SEASON SEPTEMBER 16 THRU November 30

HR/DAY	MON	TUES	WEDS	THUR	FRI	SAT	SUN
0	1	1	1	1	1	1	1
1	1	1	1	1	1	1	1
2	1	1	1	1	1	1	1
3	1	1	1	1	1	1	1
4	1	1	1	1	1	1	1
5	1	1	1	1	1	1	1
6	1	1	1	1	1	1	1
7	1	1	1	1	1	1	1
8	1	1	1	1	1	1	1
9	1	1	1	1	1	1	1
10	1	1	1	1	1	1	1
11	1	1	1	1	1	1	1
12	1	1	1	1	1	1	1
13	1	1	1	1	1	1	1
14	1	1	1	1	1	1	2
15	1	1	1	1	1	1	2
16	1	1	1	1	1	1	2
17	1	1	1	1	1	1	1
18	1	1	1	1	1	1	1
19	1	1	1	1	1	1	1
20	1	1	1	1	1	1	1
21	1	1	1	1	1	1	1
22	1	1	1	1	1	1	1
23	1	1	1	1	1	1	1

WINTER SEAS. DECEMBER 1 THRU February 28

HR/DAY	MON	TUES	WEDS	THUR	FRI	SAT	SUN
0	1	1	1	1	1	1	1
1	1	1	1	1	1	1	1
2	1	1	1	1	1	1	1
3	1	1	1	1	1	1	1
4	1	1	1	1	1	1	1
5	1	1	1	1	1	1	1
6	1	1	1	1	1	1	1
7	1	1	1	1	1	1	1
8	1	1	1	1	1	1	1
9	1	1	1	1	1	1	1
10	1	1	1	1	1	1	1
11	1	1	1	1	1	1	1
12	1	1	1	1	1	1	1
13	1	1	1	1	1	1	1
14	1	1	1	1	1	1	1
15	1	1	1	1	1	1	1
16	1	1	1	1	1	1	1
17	1	1	1	1	1	1	1
18	1	1	1	1	1	1	1
19	1	1	1	1	1	1	1
20	1	1	1	1	1	1	1
21	1	1	1	1	1	1	1
22	1	1	1	1	1	1	1
23	1	1	1	1	1	1	1

NOTES:

1) THE NEW YORK STATE THRUWAY IS A LIMITED ACCESS, HIGH-SPEED, HIGH-VOLUME HIGHWAY. TRAFFIC SHALL BE MAINTAINED IN ACCORDANCE WITH THE *MANUAL ON UNIFORM TRAFFIC CONTROL DEVICES (MUTCD)*, THE *WORK ZONE TRAFFIC CONTROL PLANS*, AND THE *STANDARD SPECIFICATIONS* SECTION 619 AS AMENDED BY THE AUTHORITY.

2) LANE CLOSURES ON THE THRUWAY SHALL ONLY BE ALLOWED IN ACCORDANCE WITH THESE TRAFFIC MANAGEMENT TABLE(S), UNLESS INDICATED OTHERWISE IN THE CONTRACT PLANS OR PROPOSAL DOCUMENTS.

3) LANE CLOSURE CHARTS SHALL APPLY AS FOLLOWS:

- 1,150 VEH/HR/LANE: APPLIES TO ALL WORK REQUIRING LANE CLOSURE(S) EXCEPT AS PERMITTED BELOW.

- 1,300 VEH/HR/LANE: APPLIES TO NON-EVASIVE WORK WHERE WORKERS AND/OR EQUIPMENT ARE LOCATED 4 FT. OR MORE FROM TRAVEL (SPACE) LANE, OR AS APPROVED BY THE THRUWAY PROJECT ENGINEER. WORK SHOULD BE ABLE TO BE IMMEDIATELY STOPPED AND LANE CLOSURE(S) REMOVED IN THE EVENT QUEUES, GREATER THAN 1 MILE, DEVELOP.

NEW YORK STATE OF OPPORTUNITY. Thruway Authority

U.S. CUSTOMARY STANDARD SHEET

LANE CLOSURE CHARTS
1,300 VEHICLES PER HOUR
BUFFALO DIVISION
(SHEET 19 OF 37)

APPROVED SEPTEMBER 1, 2018

/S/ PATRICK THOMPSON, P.E.
DIRECTOR DESIGN SUPPORT SERVICES BUREAU

ISSUED UNDER DB 18-003

TA 619-37

I-90 WESTBOUND INTERCHANGES 60 TO 61 (1,300 VEH/HR/LANE)

LANES REQUIRED TO BE OPEN BY HOUR AND TIME OF DAY

SPRING SEASON MARCH 1 THRU MAY 20

HR/DAY	MON	TUES	WEDS	THUR	FRI	SAT	SUN
0	1	1	1	1	1	1	1
1	1	1	1	1	1	1	1
2	1	1	1	1	1	1	1
3	1	1	1	1	1	1	1
4	1	1	1	1	1	1	1
5	1	1	1	1	1	1	1
6	1	1	1	1	1	1	1
7	1	1	1	1	1	1	1
8	1	1	1	1	1	1	1
9	1	1	1	1	1	1	1
10	1	1	1	1	1	1	1
11	1	1	1	1	1	1	1
12	1	1	1	1	1	1	1
13	1	1	1	1	1	1	1
14	1	1	1	1	1	1	1
15	1	1	1	1	1	1	1
16	1	1	1	1	1	1	1
17	1	1	1	1	1	1	1
18	1	1	1	1	1	1	1
19	1	1	1	1	1	1	1
20	1	1	1	1	1	1	1
21	1	1	1	1	1	1	1
22	1	1	1	1	1	1	1
23	1	1	1	1	1	1	1

SUMMER SEASON MAY 21 THRU SEPTEMBER 15

HR/DAY	MON	TUES	WEDS	THUR	FRI	SAT	SUN
0	1	1	1	1	1	1	1
1	1	1	1	1	1	1	1
2	1	1	1	1	1	1	1
3	1	1	1	1	1	1	1
4	1	1	1	1	1	1	1
5	1	1	1	1	1	1	1
6	1	1	1	1	1	1	1
7	1	1	1	1	1	1	1
8	1	1	1	1	1	1	1
9	1	1	1	1	1	1	1
10	1	1	1	1	1	1	1
11	1	1	1	1	1	1	1
12	1	1	1	1	1	1	1
13	1	1	1	1	1	1	1
14	1	1	1	1	1	1	1
15	1	1	1	1	1	1	1
16	1	1	1	1	1	1	1
17	1	1	1	1	1	1	1
18	1	1	1	1	1	1	1
19	1	1	1	1	1	1	1
20	1	1	1	1	1	1	1
21	1	1	1	1	1	1	1
22	1	1	1	1	1	1	1
23	1	1	1	1	1	1	1

LANES REQUIRED TO BE OPEN BY HOUR AND TIME OF DAY

FALL SEASON SEPTEMBER 16 THRU November 30

HR/DAY	MON	TUES	WEDS	THUR	FRI	SAT	SUN
0	1	1	1	1	1	1	1
1	1	1	1	1	1	1	1
2	1	1	1	1	1	1	1
3	1	1	1	1	1	1	1
4	1	1	1	1	1	1	1
5	1	1	1	1	1	1	1
6	1	1	1	1	1	1	1
7	1	1	1	1	1	1	1
8	1	1	1	1	1	1	1
9	1	1	1	1	1	1	1
10	1	1	1	1	1	1	1
11	1	1	1	1	1	1	1
12	1	1	1	1	1	1	1
13	1	1	1	1	1	1	1
14	1	1	1	1	1	1	1
15	1	1	1	1	1	1	1
16	1	1	1	1	1	1	1
17	1	1	1	1	1	1	1
18	1	1	1	1	1	1	1
19	1	1	1	1	1	1	1
20	1	1	1	1	1	1	1
21	1	1	1	1	1	1	1
22	1	1	1	1	1	1	1
23	1	1	1	1	1	1	1

WINTER SEAS. DECEMBER 1 THRU February 28

HR/DAY	MON	TUES	WEDS	THUR	FRI	SAT	SUN
0	1	1	1	1	1	1	1
1	1	1	1	1	1	1	1
2	1	1	1	1	1	1	1
3	1	1	1	1	1	1	1
4	1	1	1	1	1	1	1
5	1	1	1	1	1	1	1
6	1	1	1	1	1	1	1
7	1	1	1	1	1	1	1
8	1	1	1	1	1	1	1
9	1	1	1	1	1	1	1
10	1	1	1	1	1	1	1
11	1	1	1	1	1	1	1
12	1	1	1	1	1	1	1
13	1	1	1	1	1	1	1
14	1	1	1	1	1	1	1
15	1	1	1	1	1	1	1
16	1	1	1	1	1	1	1
17	1	1	1	1	1	1	1
18	1	1	1	1	1	1	1
19	1	1	1	1	1	1	1
20	1	1	1	1	1	1	1
21	1	1	1	1	1	1	1
22	1	1	1	1	1	1	1
23	1	1	1	1	1	1	1

I-90 EASTBOUND INTERCHANGES 61 TO 60 (1,300 VEH/HR/LANE)

LANES REQUIRED TO BE OPEN BY HOUR AND TIME OF DAY

SPRING SEASON MARCH 1 THRU MAY 20

HR/DAY	MON	TUES	WEDS	THUR	FRI	SAT	SUN
0	1	1	1	1	1	1	1
1	1	1	1	1	1	1	1
2	1	1	1	1	1	1	1
3	1	1	1	1	1	1	1
4	1	1	1	1	1	1	1
5	1	1	1	1	1	1	1
6	1	1	1	1	1	1	1
7	1	1	1	1	1	1	1
8	1	1	1	1	1	1	1
9	1	1	1	1	1	1	1
10	1	1	1	1	1	1	1
11	1	1	1	1	1	1	1
12	1	1	1	1	1	1	1
13	1	1	1	1	1	1	1
14	1	1	1	1	1	1	1
15	1	1	1	1	1	1	1
16	1	1	1	1	1	1	1
17	1	1	1	1	1	1	1
18	1	1	1	1	1	1	1
19	1	1	1	1	1	1	1
20	1	1	1	1	1	1	1
21	1	1	1	1	1	1	1
22	1	1	1	1	1	1	1
23	1	1	1	1	1	1	1

SUMMER SEASON MAY 21 THRU SEPTEMBER 15

HR/DAY	MON	TUES	WEDS	THUR	FRI	SAT	SUN
0	1	1	1	1	1	1	1
1	1	1	1	1	1	1	1
2	1	1	1	1	1	1	1
3	1	1	1	1	1	1	1
4	1	1	1	1	1	1	1
5	1	1	1	1	1	1	1
6	1	1	1	1	1	1	1
7	1	1	1	1	1	1	1
8	1	1	1	1	1	1	1
9	1	1	1	1	1	1	1
10	1	1	1	1	1	1	1
11	1	1	1	1	1	1	1
12	1	1	1	1	1	1	1
13	1	1	1	1	1	1	1
14	1	1	1	1	1	1	2
15	1	1	1	1	1	1	2
16	1	1	1	1	1	1	2
17	1	1	1	1	1	1	1
18	1	1	1	1	1	1	1
19	1	1	1	1	1	1	1
20	1	1	1	1	1	1	1
21	1	1	1	1	1	1	1
22	1	1	1	1	1	1	1
23	1	1	1	1	1	1	1

LANES REQUIRED TO BE OPEN BY HOUR AND TIME OF DAY

FALL SEASON SEPTEMBER 16 THRU November 30

HR/DAY	MON	TUES	WEDS	THUR	FRI	SAT	SUN
0	1	1	1	1	1	1	1
1	1	1	1	1	1	1	1
2	1	1	1	1	1	1	1
3	1	1	1	1	1	1	1
4	1	1	1	1	1	1	1
5	1	1	1	1	1	1	1
6	1	1	1	1	1	1	1
7	1	1	1	1	1	1	1
8	1	1	1	1	1	1	1
9	1	1	1	1	1	1	1
10	1	1	1	1	1	1	1
11	1	1	1	1	1	1	1
12	1	1	1	1	1	1	1
13	1	1	1	1	1	1	1
14	1	1	1	1	1	1	2
15	1	1	1	1	1	1	1
16	1	1	1	1	1	1	1
17	1	1	1	1	1	1	1
18	1	1	1	1	1	1	1
19	1	1	1	1	1	1	1
20	1	1	1	1	1	1	1
21	1	1	1	1	1	1	1
22	1	1	1	1	1	1	1
23	1	1	1	1	1	1	1

WINTER SEAS. DECEMBER 1 THRU February 28

HR/DAY	MON	TUES	WEDS	THUR	FRI	SAT	SUN
0	1	1	1	1	1	1	1
1	1	1	1	1	1	1	1
2	1	1	1	1	1	1	1
3	1	1	1	1	1	1	1
4	1	1	1	1	1	1	1
5	1	1	1	1	1	1	1
6	1	1	1	1	1	1	1
7	1	1	1	1	1	1	1
8	1	1	1	1	1	1	1
9	1	1	1	1	1	1	1
10	1	1	1	1	1	1	1
11	1	1	1	1	1	1	1
12	1	1	1	1	1	1	1
13	1	1	1	1	1	1	1
14	1	1	1	1	1	1	1
15	1	1	1	1	1	1	1
16	1	1	1	1	1	1	1
17	1	1	1	1	1	1	1
18	1	1	1	1	1	1	1
19	1	1	1	1	1	1	1
20	1	1	1	1	1	1	1
21	1	1	1	1	1	1	1
22	1	1	1	1	1	1	1
23	1	1	1	1	1	1	1

NOTES:

1) THE NEW YORK STATE THRUWAY IS A LIMITED ACCESS, HIGH-SPEED, HIGH-VOLUME HIGHWAY. TRAFFIC SHALL BE MAINTAINED IN ACCORDANCE WITH THE *MANUAL ON UNIFORM TRAFFIC CONTROL DEVICES (MUTCD)*, THE *WORK ZONE TRAFFIC CONTROL PLANS*, AND THE *STANDARD SPECIFICATIONS* SECTION 619 AS AMENDED BY THE AUTHORITY.

2) LANE CLOSURES ON THE THRUWAY SHALL ONLY BE ALLOWED IN ACCORDANCE WITH THESE TRAFFIC MANAGEMENT TABLE(S), UNLESS INDICATED OTHERWISE IN THE CONTRACT PLANS OR PROPOSAL DOCUMENTS.

3) LANE CLOSURE CHARTS SHALL APPLY AS FOLLOWS:

- 1,150 VEH/HR/LANE: APPLIES TO ALL WORK REQUIRING LANE CLOSURE(S) EXCEPT AS PERMITTED BELOW.

- 1,300 VEH/HR/LANE: APPLIES TO NON-EVASIVE WORK WHERE WORKERS AND/OR EQUIPMENT ARE LOCATED 4 FT. OR MORE FROM TRAVEL (SPACE) LANE, OR AS APPROVED BY THE THRUWAY PROJECT ENGINEER. WORK SHOULD BE ABLE TO BE IMMEDIATELY STOPPED AND LANE CLOSURE(S) REMOVED IN THE EVENT QUEUES, GREATER THAN 1 MILE, DEVELOP.

NEW YORK STATE OF OPPORTUNITY. Thruway Authority

U.S. CUSTOMARY STANDARD SHEET

LANE CLOSURE CHARTS
1,300 VEHICLES PER HOUR
BUFFALO DIVISION
(SHEET 20 OF 37)

APPROVED SEPTEMBER 1, 2018

/S/ PATRICK THOMPSON, P.E.
DIRECTOR DESIGN SUPPORT SERVICES BUREAU

ISSUED UNDER DB 18-003

TA 619-37

NIAGARA: I-190 NORTHBOUND INTERCHANGES N0 TO N1 (1,300 VEH/HR/LANE)

LANES REQUIRED TO BE OPEN BY HOUR AND TIME OF DAY

SPRING SEASON MARCH 1 THRU MAY 20

HR/DAY	MON	TUES	WEDS	THUR	FRI	SAT	SUN
0	1	1	1	1	1	1	1
1	1	1	1	1	1	1	1
2	1	1	1	1	1	1	1
3	1	1	1	1	1	1	1
4	1	1	1	1	1	1	1
5	1	1	1	1	1	1	1
6	3	3	3	3	3	1	1
7	3	3	3	3	3	1	1
8	3	3	3	3	3	1	1
9	2	2	2	2	2	1	1
10	2	2	2	2	2	2	1
11	2	2	2	2	2	2	2
12	2	2	2	2	2	2	2
13	2	2	2	2	2	2	2
14	2	2	2	2	2	2	2
15	2	2	2	2	2	2	2
16	2	2	2	2	2	2	2
17	2	2	2	2	2	2	2
18	2	2	2	2	2	2	2
19	1	1	2	2	2	2	2
20	1	1	1	1	1	1	1
21	1	1	1	1	1	1	1
22	1	1	1	1	1	1	1
23	1	1	1	1	1	1	1

SUMMER SEASON MAY 21 THRU SEPTEMBER 15

HR/DAY	MON	TUES	WEDS	THUR	FRI	SAT	SUN
0	1	1	1	1	1	1	1
1	1	1	1	1	1	1	1
2	1	1	1	1	1	1	1
3	1	1	1	1	1	1	1
4	1	1	1	1	1	1	1
5	1	1	1	1	1	1	1
6	3	3	3	3	3	1	1
7	3	3	3	3	3	1	1
8	3	3	3	3	3	1	1
9	2	2	2	2	2	2	1
10	2	2	2	2	2	2	1
11	2	2	2	2	2	2	2
12	2	2	2	2	2	2	2
13	2	2	2	2	2	2	2
14	2	2	2	2	2	2	2
15	2	2	2	2	2	2	2
16	2	2	2	2	2	2	2
17	2	2	2	2	2	2	2
18	2	2	2	2	2	2	2
19	2	2	2	2	2	2	2
20	1	1	1	2	2	1	2
21	1	1	1	1	2	1	1
22	1	1	1	1	1	1	1
23	1	1	1	1	1	1	1

LANES REQUIRED TO BE OPEN BY HOUR AND TIME OF DAY

FALL SEASON SEPTEMBER 16 THRU November 30

HR/DAY	MON	TUES	WEDS	THUR	FRI	SAT	SUN
0	1	1	1	1	1	1	1
1	1	1	1	1	1	1	1
2	1	1	1	1	1	1	1
3	1	1	1	1	1	1	1
4	1	1	1	1	1	1	1
5	1	1	1	1	1	1	1
6	3	3	3	3	3	1	1
7	3	3	3	3	3	1	1
8	3	3	3	3	3	1	1
9	2	2	2	3	2	2	1
10	2	2	2	2	2	2	2
11	2	2	2	2	2	2	2
12	2	2	2	2	2	2	2
13	2	2	2	2	2	2	2
14	2	2	2	2	2	2	2
15	2	2	2	2	2	2	2
16	2	2	2	2	2	2	2
17	2	2	2	2	2	2	2
18	2	2	2	2	2	2	2
19	2	2	2	2	2	2	2
20	1	1	1	1	1	1	1
21	1	1	1	1	1	1	1
22	1	1	1	1	1	1	1
23	1	1	1	1	1	1	1

WINTER SEAS. DECEMBER 1 THRU February 28

HR/DAY	MON	TUES	WEDS	THUR	FRI	SAT	SUN
0	1	1	1	1	1	1	1
1	1	1	1	1	1	1	1
2	1	1	1	1	1	1	1
3	1	1	1	1	1	1	1
4	1	1	1	1	1	1	1
5	1	1	1	1	1	1	1
6	3	3	3	3	3	1	1
7	3	3	3	3	3	1	1
8	3	3	3	3	3	1	1
9	2	2	2	2	2	1	1
10	2	2	2	2	2	1	1
11	2	2	2	2	2	2	2
12	2	2	2	2	2	2	2
13	2	2	2	2	2	2	2
14	2	2	2	2	2	2	2
15	2	2	2	2	2	2	2
16	2	2	2	2	2	2	2
17	2	2	2	2	2	2	2
18	2	2	2	2	3	2	2
19	1	2	2	1	2	1	1
20	1	1	1	1	1	1	1
21	1	1	1	1	1	1	1
22	1	1	1	1	1	1	1
23	1	1	1	1	1	1	1

NIAGARA: I-190 SOUTHBOUND INTERCHANGES N1 TO N0 (1,300 VEH/HR/LANE)

LANES REQUIRED TO BE OPEN BY HOUR AND TIME OF DAY

SPRING SEASON MARCH 1 THRU MAY 20

HR/DAY	MON	TUES	WEDS	THUR	FRI	SAT	SUN
0	1	1	1	1	1	1	1
1	1	1	1	1	1	1	1
2	1	1	1	1	1	1	1
3	1	1	1	1	1	1	1
4	1	1	1	1	1	1	1
5	1	1	1	1	1	1	1
6	2	2	2	2	2	1	1
7	2	2	2	2	2	1	1
8	2	2	2	2	2	2	1
9	2	2	2	2	2	2	1
10	2	2	2	2	2	2	2
11	2	2	2	2	2	2	2
12	2	2	2	2	3	2	2
13	2	2	2	2	3	2	2
14	3	3	3	3	3	2	2
15	3	3	3	3	3	2	2
16	3	3	3	3	3	2	2
17	3	3	3	3	3	2	2
18	2	2	3	3	2	2	2
19	2	2	2	2	2	2	2
20	1	2	2	2	2	2	2
21	1	2	2	2	2	2	1
22	2	2	2	2	2	2	2
23	1	1	1	1	2	2	1

SUMMER SEASON MAY 21 THRU SEPTEMBER 15

HR/DAY	MON	TUES	WEDS	THUR	FRI	SAT	SUN
0	1	1	1	1	1	1	1
1	1	1	1	1	1	1	1
2	1	1	1	1	1	1	1
3	1	1	1	1	1	1	1
4	1	1	1	1	1	1	1
5	1	1	1	1	1	1	1
6	2	2	2	2	2	1	1
7	2	2	2	2	2	1	1
8	2	2	2	2	2	2	1
9	2	2	2	2	2	2	2
10	2	2	2	2	2	2	2
11	2	2	2	2	3	2	2
12	2	2	3	3	3	2	2
13	2	2	3	3	3	2	2
14	3	3	3	3	3	2	2
15	3	3	3	3	3	2	2
16	3	3	3	3	3	2	2
17	3	3	3	3	3	2	2
18	2	3	3	3	3	2	2
19	2	2	2	2	2	2	2
20	2	2	2	2	2	2	2
21	1	2	2	2	2	2	1
22	1	2	1	2	2	2	1
23	1	1	1	1	2	1	1

LANES REQUIRED TO BE OPEN BY HOUR AND TIME OF DAY

FALL SEASON SEPTEMBER 16 THRU November 30

HR/DAY	MON	TUES	WEDS	THUR	FRI	SAT	SUN
0	1	1	1	1	1	1	1
1	1	1	1	1	1	1	1
2	1	1	1	1	1	1	1
3	1	1	1	1	1	1	1
4	1	1	1	1	1	1	1
5	1	1	1	1	1	1	1
6	2	2	2	2	2	1	1
7	2	2	2	2	2	1	1
8	2	2	2	2	2	2	1
9	2	2	2	2	2	2	2
10	2	2	2	2	2	2	2
11	2	2	2	2	2	2	2
12	2	2	2	2	3	2	2
13	2	2	2	2	3	2	2
14	3	3	3	3	3	2	2
15	3	3	3	3	3	2	2
16	3	3	3	3	3	2	2
17	3	3	3	3	3	2	2
18	2	3	2	3	3	2	1
19	2	2	2	2	2	1	1
20	2	2	2	2	2	1	1
21	2	2	2	2	2	2	1
22	1	2	2	2	2	2	1
23	1	1	1	1	1	1	1

WINTER SEAS. DECEMBER 1 THRU February 28

HR/DAY	MON	TUES	WEDS	THUR	FRI	SAT	SUN
0	1	1	1	1	1	1	1
1	1	1	1	1	1	1	1
2	1	1	1	1	1	1	1
3	1	1	1	1	1	1	1
4	1	1	1	1	1	1	1
5	1	1	1	1	1	1	1
6	1	2	2	2	1	1	1
7	2	2	2	2	2	1	1
8	2	2	2	2	2	2	1
9	2	2	2	2	2	2	1
10	2	2	2	2	2	2	2
11	2	2	2	2	2	2	2
12	2	2	2	2	2	2	2
13	2	2	2	2	3	2	2
14	3	3	3	3	3	2	2
15	3	3	3	3	3	2	3
16	3	3	3	3	3	2	2
17	3	3	3	3	3	2	2
18	2	3	3	3	2	2	2
19	2	2	2	2	2	1	1
20	1	2	2	2	2	1	1
21	1	2	2	2	2	2	1
22	2	2	2	2	2	2	1
23	1	1	1	1	2	1	1

NOTES:

1) THE NEW YORK STATE THRUWAY IS A LIMITED ACCESS, HIGH-SPEED, HIGH-VOLUME HIGHWAY. TRAFFIC SHALL BE MAINTAINED IN ACCORDANCE WITH THE *MANUAL ON UNIFORM TRAFFIC CONTROL DEVICES (MUTCD)*, THE *WORK ZONE TRAFFIC CONTROL PLANS*, AND THE *STANDARD SPECIFICATIONS* SECTION 619 AS AMENDED BY THE AUTHORITY.

2) LANE CLOSURES ON THE THRUWAY SHALL ONLY BE ALLOWED IN ACCORDANCE WITH THESE TRAFFIC MANAGEMENT TABLE(S), UNLESS INDICATED OTHERWISE IN THE CONTRACT PLANS OR PROPOSAL DOCUMENTS.

3) LANE CLOSURE CHARTS SHALL APPLY AS FOLLOWS:

- 1,150 VEH/HR/LANE: APPLIES TO ALL WORK REQUIRING LANE CLOSURE(S) EXCEPT AS PERMITTED BELOW.

- 1,300 VEH/HR/LANE: APPLIES TO NON-EVASIVE WORK WHERE WORKERS AND/OR EQUIPMENT ARE LOCATED 4 FT. OR MORE FROM TRAVEL (SPACE) LANE, OR AS APPROVED BY THE THRUWAY PROJECT ENGINEER. WORK SHOULD BE ABLE TO BE IMMEDIATELY STOPPED AND LANE CLOSURE(S) REMOVED IN THE EVENT QUEUES, GREATER THAN 1 MILE, DEVELOP.

NEW YORK STATE OF OPPORTUNITY. Thruway Authority

U.S. CUSTOMARY STANDARD SHEET

LANE CLOSURE CHARTS
1,300 VEHICLES PER HOUR
BUFFALO DIVISION
(SHEET 21 OF 37)

APPROVED SEPTEMBER 1, 2018

/S/ PATRICK THOMPSON, P.E.
DIRECTOR DESIGN SUPPORT SERVICES BUREAU

ISSUED UNDER DB 18-003

TA 619-37

NIAGARA: I-190 NORTHBOUND INTERCHANGES N1 TO N2 (1,300 VEH/HR/LANE)

LANES REQUIRED TO BE OPEN BY HOUR AND TIME OF DAY

SPRING SEASON MARCH 1 THRU MAY 20

HR/DAY	MON	TUES	WEDS	THUR	FRI	SAT	SUN
0	1	1	1	1	1	1	1
1	1	1	1	1	1	1	1
2	1	1	1	1	1	1	1
3	1	1	1	1	1	1	1
4	1	1	1	1	1	1	1
5	1	1	1	1	1	1	1
6	3	3	3	3	3	1	1
7	3	3	3	3	3	1	1
8	3	3	3	3	3	1	1
9	2	2	2	2	2	2	1
10	2	2	2	2	2	2	2
11	2	2	2	2	2	2	2
12	2	2	2	2	2	2	2
13	2	2	2	2	2	2	2
14	2	2	2	2	2	2	2
15	2	2	2	2	2	2	2
16	2	2	2	2	2	2	2
17	2	2	2	2	2	2	2
18	2	2	2	2	2	2	2
19	2	1	1	1	2	2	2
20	1	1	1	1	1	1	1
21	1	1	1	1	1	1	1
22	1	1	1	1	1	1	1
23	1	1	1	1	1	1	1

SUMMER SEASON MAY 21 THRU SEPTEMBER 15

HR/DAY	MON	TUES	WEDS	THUR	FRI	SAT	SUN
0	1	1	1	1	1	1	1
1	1	1	1	1	1	1	1
2	1	1	1	1	1	1	1
3	1	1	1	1	1	1	1
4	1	1	1	1	1	1	1
5	1	1	1	1	1	1	1
6	3	3	3	3	3	1	1
7	3	3	3	3	3	1	1
8	3	3	3	3	3	2	1
9	3	2	2	2	3	2	1
10	2	2	2	2	2	2	2
11	2	2	2	2	2	2	2
12	2	2	2	2	2	2	2
13	2	2	2	2	2	2	2
14	2	2	2	2	2	2	2
15	2	2	2	2	3	2	2
16	2	2	2	3	3	2	2
17	2	3	3	3	3	2	2
18	2	2	2	2	3	2	2
19	2	2	2	2	2	2	2
20	1	1	2	2	2	2	2
21	1	1	1	2	2	2	1
22	1	1	1	1	1	1	1
23	1	1	1	1	1	1	1

LANES REQUIRED TO BE OPEN BY HOUR AND TIME OF DAY

FALL SEASON SEPTEMBER 16 THRU November 30

HR/DAY	MON	TUES	WEDS	THUR	FRI	SAT	SUN
0	1	1	1	1	1	1	1
1	1	1	1	1	1	1	1
2	1	1	1	1	1	1	1
3	1	1	1	1	1	1	1
4	1	1	1	1	1	1	1
5	1	2	2	2	1	1	1
6	3	3	3	3	3	1	1
7	3	3	3	3	3	1	1
8	3	3	3	3	3	2	1
9	2	3	3	3	3	2	1
10	2	2	2	2	2	2	1
11	2	2	2	2	2	2	2
12	2	2	2	2	2	2	2
13	2	2	2	2	2	2	2
14	3	3	3	2	2	2	2
15	2	3	3	2	3	2	2
16	2	3	3	3	2	2	2
17	2	3	2	3	3	2	2
18	2	2	3	3	3	2	2
19	2	2	2	2	2	2	2
20	1	1	2	1	2	1	1
21	1	1	1	1	1	1	1
22	1	1	1	1	1	1	1
23	1	1	1	1	1	1	1

WINTER SEAS. DECEMBER 1 THRU February 28

HR/DAY	MON	TUES	WEDS	THUR	FRI	SAT	SUN
0	1	1	1	1	1	1	1
1	1	1	1	1	1	1	1
2	1	1	1	1	1	1	1
3	1	1	1	1	1	1	1
4	1	1	1	1	1	1	1
5	1	1	1	1	1	1	1
6	3	3	3	3	3	1	1
7	3	3	3	3	3	1	1
8	3	3	3	3	3	1	1
9	2	2	3	3	3	1	1
10	2	2	2	2	2	2	1
11	2	2	2	2	2	2	2
12	2	2	2	2	2	2	2
13	2	2	2	2	2	2	2
14	2	2	2	2	2	2	2
15	2	2	2	2	2	2	2
16	2	2	2	2	2	2	2
17	2	2	2	2	2	2	2
18	2	2	2	2	2	3	2
19	2	2	2	1	2	2	1
20	1	1	1	1	1	1	1
21	1	1	1	1	1	1	1
22	1	1	1	1	1	1	1
23	1	1	1	1	1	1	1

NIAGARA: I-190 SOUTHBOUND INTERCHANGES N2 TO N1 (1,300 VEH/HR/LANE)

LANES REQUIRED TO BE OPEN BY HOUR AND TIME OF DAY

SPRING SEASON MARCH 1 THRU MAY 20

HR/DAY	MON	TUES	WEDS	THUR	FRI	SAT	SUN
0	1	1	1	1	1	1	1
1	1	1	1	1	1	1	1
2	1	1	1	1	1	1	1
3	1	1	1	1	1	1	1
4	1	1	1	1	1	1	1
5	1	1	1	1	1	1	1
6	2	2	2	2	2	1	1
7	2	2	2	2	2	1	1
8	2	2	2	2	2	2	1
9	2	2	2	2	2	2	1
10	2	2	2	2	2	2	2
11	2	2	2	2	2	2	2
12	2	2	2	2	2	2	2
13	2	2	2	2	3	2	2
14	3	3	3	3	3	2	2
15	3	3	3	3	3	2	2
16	3	3	3	3	3	2	2
17	3	3	3	3	3	2	2
18	2	2	2	2	2	2	2
19	2	2	2	2	2	1	2
20	1	2	2	2	2	1	1
21	1	2	2	1	2	2	1
22	2	2	2	1	2	2	1
23	1	1	1	1	2	2	1

SUMMER SEASON MAY 21 THRU SEPTEMBER 15

HR/DAY	MON	TUES	WEDS	THUR	FRI	SAT	SUN
0	1	1	1	1	1	1	1
1	1	1	1	1	1	1	1
2	1	1	1	1	1	1	1
3	1	1	1	1	1	1	1
4	1	1	1	1	1	1	1
5	1	1	1	1	1	1	1
6	2	1	2	1	2	1	1
7	2	2	2	2	2	1	1
8	2	2	2	2	2	2	1
9	2	2	2	2	2	2	1
10	2	2	2	2	2	2	2
11	2	2	2	2	2	2	2
12	2	2	2	2	3	2	2
13	2	2	2	2	3	2	2
14	3	3	3	3	3	2	2
15	3	3	3	3	3	2	2
16	3	3	3	3	3	2	2
17	3	3	3	3	3	2	2
18	2	2	3	2	2	2	2
19	2	2	2	2	2	2	2
20	2	2	2	2	2	2	2
21	2	2	2	2	2	2	1
22	1	2	2	2	2	2	1
23	2	1	2	2	2	1	1

LANES REQUIRED TO BE OPEN BY HOUR AND TIME OF DAY

FALL SEASON SEPTEMBER 16 THRU November 30

HR/DAY	MON	TUES	WEDS	THUR	FRI	SAT	SUN
0	1	1	1	1	1	1	1
1	1	1	1	1	1	1	1
2	1	1	1	1	1	1	1
3	1	1	1	1	1	1	1
4	1	1	1	1	1	1	1
5	1	1	1	1	1	1	1
6	1	2	2	2	2	1	1
7	2	2	2	2	2	1	1
8	2	2	2	2	2	2	1
9	2	2	2	2	2	2	2
10	2	2	2	2	2	2	2
11	2	2	2	2	3	2	2
12	2	3	2	3	3	2	2
13	2	3	2	3	3	2	2
14	3	3	3	3	3	2	2
15	3	3	3	3	3	2	2
16	3	3	3	3	3	2	2
17	3	3	3	3	3	2	2
18	2	3	3	3	3	2	2
19	2	2	2	2	2	2	1
20	1	2	2	2	2	1	2
21	2	2	2	2	2	2	1
22	1	2	2	2	2	2	1
23	1	1	1	1	1	1	1

WINTER SEAS. DECEMBER 1 THRU February 28

HR/DAY	MON	TUES	WEDS	THUR	FRI	SAT	SUN
0	1	1	1	1	1	1	1
1	1	1	1	1	1	1	1
2	1	1	1	1	1	1	1
3	1	1	1	1	1	1	1
4	1	1	1	1	1	1	1
5	1	1	1	1	1	1	1
6	1	1	1	1	1	1	1
7	2	2	2	2	2	1	1
8	2	2	2	2	2	1	1
9	2	2	2	2	2	2	1
10	2	2	2	2	2	2	2
11	2	2	2	2	2	2	2
12	2	2	2	2	2	2	2
13	2	2	2	2	3	2	2
14	3	3	3	3	3	2	2
15	3	3	3	3	3	2	3
16	3	3	3	3	3	2	2
17	3	3	3	3	3	2	2
18	2	3	3	3	2	1	2
19	2	2	2	2	2	1	1
20	1	2	2	2	2	1	1
21	2	2	2	2	2	2	1
22	1	2	2	1	3	2	1
23	1	1	1	1	1	1	1

NOTES:

1) THE NEW YORK STATE THRUWAY IS A LIMITED ACCESS, HIGH-SPEED, HIGH-VOLUME HIGHWAY. TRAFFIC SHALL BE MAINTAINED IN ACCORDANCE WITH THE *MANUAL ON UNIFORM TRAFFIC CONTROL DEVICES (MUTCD)*, THE *WORK ZONE TRAFFIC CONTROL PLANS*, AND THE *STANDARD SPECIFICATIONS* SECTION 619 AS AMENDED BY THE AUTHORITY.

2) LANE CLOSURES ON THE THRUWAY SHALL ONLY BE ALLOWED IN ACCORDANCE WITH THESE TRAFFIC MANAGEMENT TABLE(S), UNLESS INDICATED OTHERWISE IN THE CONTRACT PLANS OR PROPOSAL DOCUMENTS.

3) LANE CLOSURE CHARTS SHALL APPLY AS FOLLOWS:

- 1,150 VEH/HR/LANE: APPLIES TO ALL WORK REQUIRING LANE CLOSURE(S) EXCEPT AS PERMITTED BELOW.

- 1,300 VEH/HR/LANE: APPLIES TO NON-EVASIVE WORK WHERE WORKERS AND/OR EQUIPMENT ARE LOCATED 4 FT. OR MORE FROM TRAVEL (SPACE) LANE, OR AS APPROVED BY THE THRUWAY PROJECT ENGINEER. WORK SHOULD BE ABLE TO BE IMMEDIATELY STOPPED AND LANE CLOSURE(S) REMOVED IN THE EVENT QUEUES, GREATER THAN 1 MILE, DEVELOP.

NEW YORK STATE OF OPPORTUNITY. Thruway Authority

U.S. CUSTOMARY STANDARD SHEET

LANE CLOSURE CHARTS
1,300 VEHICLES PER HOUR
BUFFALO DIVISION
(SHEET 22 OF 37)

APPROVED SEPTEMBER 1, 2018

/S/ PATRICK THOMPSON, P.E.
DIRECTOR DESIGN SUPPORT SERVICES BUREAU

ISSUED UNDER DB 18-003

TA 619-37

NIAGARA: I-190 NORTHBOUND INTERCHANGES N2 TO N3 (1,300 VEH/HR/LANE)

LANES REQUIRED TO BE OPEN BY HOUR AND TIME OF DAY

SPRING SEASON MARCH 1 THRU MAY 20

HR/DAY	MON	TUES	WEDS	THUR	FRI	SAT	SUN
0	1	1	1	1	1	1	1
1	1	1	1	1	1	1	1
2	1	1	1	1	1	1	1
3	1	1	1	1	1	1	1
4	1	1	1	1	1	1	1
5	1	1	1	1	1	1	1
6	3	3	3	3	3	1	1
7	3	3	3	3	3	1	1
8	3	3	3	3	3	1	1
9	3	2	3	2	2	2	1
10	2	2	2	2	2	2	2
11	2	2	2	2	2	2	2
12	2	2	2	2	2	2	2
13	2	2	2	2	2	2	2
14	2	2	2	2	2	2	2
15	2	2	2	2	2	2	2
16	2	2	2	2	2	2	2
17	2	2	2	2	2	2	2
18	2	2	2	2	2	2	2
19	2	1	2	2	2	2	2
20	1	1	1	1	1	1	1
21	1	1	1	1	1	1	1
22	1	1	1	1	1	1	1
23	1	1	1	1	1	1	1

SUMMER SEASON MAY 21 THRU SEPTEMBER 15

HR/DAY	MON	TUES	WEDS	THUR	FRI	SAT	SUN
0	1	1	1	1	1	1	1
1	1	1	1	1	1	1	1
2	1	1	1	1	1	1	1
3	1	1	1	1	1	1	1
4	1	1	1	1	1	1	1
5	1	1	1	1	1	1	1
6	3	3	3	3	3	1	1
7	3	3	3	3	3	1	1
8	3	3	3	3	3	1	1
9	3	2	2	2	2	2	1
10	2	2	2	2	2	2	2
11	2	2	2	2	2	2	2
12	2	2	2	2	2	2	2
13	2	2	2	2	2	2	2
14	2	2	2	2	2	2	2
15	2	2	2	2	2	2	2
16	2	2	2	2	3	2	2
17	2	3	2	2	3	2	2
18	2	2	2	2	3	2	2
19	2	2	2	2	2	2	2
20	1	1	1	2	2	2	2
21	1	1	1	2	2	2	1
22	1	1	1	1	2	1	1
23	1	1	1	1	1	1	1

LANES REQUIRED TO BE OPEN BY HOUR AND TIME OF DAY

FALL SEASON SEPTEMBER 16 THRU November 30

HR/DAY	MON	TUES	WEDS	THUR	FRI	SAT	SUN
0	1	1	1	1	1	1	1
1	1	1	1	1	1	1	1
2	1	1	1	1	1	1	1
3	1	1	1	1	1	1	1
4	1	1	1	1	1	1	1
5	1	1	1	1	1	1	1
6	3	3	3	3	3	1	1
7	3	3	3	3	3	1	1
8	3	3	3	3	3	1	1
9	2	3	3	3	3	2	1
10	2	2	2	2	2	2	1
11	2	2	2	2	2	2	2
12	2	2	2	2	2	2	2
13	2	2	2	2	2	2	2
14	2	2	2	2	2	2	2
15	2	2	2	2	2	2	2
16	2	2	2	2	2	2	2
17	2	2	2	2	3	2	2
18	2	2	2	2	3	2	2
19	2	2	2	2	2	2	2
20	1	1	1	1	1	1	1
21	1	1	1	1	1	1	1
22	1	1	1	1	1	1	1
23	1	1	1	1	1	1	1

WINTER SEAS. DECEMBER 1 THRU February 28

HR/DAY	MON	TUES	WEDS	THUR	FRI	SAT	SUN
0	1	1	1	1	1	1	1
1	1	1	1	1	1	1	1
2	1	1	1	1	1	1	1
3	1	1	1	1	1	1	1
4	1	1	1	1	1	1	1
5	1	1	1	1	1	1	1
6	3	3	3	3	3	1	1
7	3	3	3	3	3	1	1
8	3	3	3	3	3	1	1
9	2	3	3	3	2	1	1
10	2	2	2	2	2	2	1
11	2	2	2	2	2	2	2
12	2	2	2	2	2	2	2
13	2	2	2	2	2	2	2
14	2	2	2	2	2	2	2
15	2	2	2	2	2	2	2
16	2	2	2	2	2	2	2
17	2	2	2	2	2	2	2
18	2	2	2	2	2	2	2
19	1	2	1	2	2	2	1
20	1	1	1	1	1	1	1
21	1	1	1	1	1	1	1
22	1	1	1	1	1	1	1
23	1	1	1	1	1	1	1

NIAGARA: I-190 SOUTHBOUND INTERCHANGES N3 TO N2 (1,300 VEH/HR/LANE)

LANES REQUIRED TO BE OPEN BY HOUR AND TIME OF DAY

SPRING SEASON MARCH 1 THRU MAY 20

HR/DAY	MON	TUES	WEDS	THUR	FRI	SAT	SUN
0	1	1	1	1	1	1	1
1	1	1	1	1	1	1	1
2	1	1	1	1	1	1	1
3	1	1	1	1	1	1	1
4	1	1	1	1	1	1	1
5	1	1	1	1	1	1	1
6	1	1	1	1	1	1	1
7	2	2	2	2	2	1	1
8	2	2	2	2	2	2	1
9	2	2	2	2	2	2	1
10	2	2	2	2	2	2	2
11	2	2	2	2	2	2	2
12	2	2	2	2	2	2	2
13	2	2	2	2	2	2	2
14	3	3	3	3	3	2	2
15	3	3	3	3	3	2	2
16	3	3	3	3	3	2	2
17	3	3	3	3	3	2	2
18	2	2	2	2	2	2	2
19	2	2	2	2	2	1	2
20	1	2	2	2	2	1	2
21	2	2	2	1	2	2	1
22	2	2	2	2	2	2	2
23	1	1	1	1	2	2	1

SUMMER SEASON MAY 21 THRU SEPTEMBER 15

HR/DAY	MON	TUES	WEDS	THUR	FRI	SAT	SUN
0	1	1	1	1	1	1	1
1	1	1	1	1	1	1	1
2	1	1	1	1	1	1	1
3	1	1	1	1	1	1	1
4	1	1	1	1	1	1	1
5	1	1	1	1	1	1	1
6	1	1	1	1	1	1	1
7	2	2	2	2	2	1	1
8	2	2	2	2	2	2	1
9	2	2	2	2	2	2	1
10	2	2	2	2	2	2	2
11	2	2	2	2	2	2	2
12	2	2	2	2	3	2	2
13	2	2	2	2	3	2	2
14	3	3	3	3	3	2	2
15	3	3	3	3	3	2	2
16	3	3	3	3	3	2	2
17	3	3	3	3	3	2	2
18	2	2	2	2	2	2	2
19	2	2	2	2	2	2	2
20	2	2	2	2	2	2	2
21	1	2	2	2	2	2	1
22	1	2	2	2	2	2	1
23	2	1	1	2	2	1	1

LANES REQUIRED TO BE OPEN BY HOUR AND TIME OF DAY

FALL SEASON SEPTEMBER 16 THRU November 30

HR/DAY	MON	TUES	WEDS	THUR	FRI	SAT	SUN
0	1	1	1	1	1	1	1
1	1	1	1	1	1	1	1
2	1	1	1	1	1	1	1
3	1	1	1	1	1	1	1
4	1	1	1	1	1	1	1
5	1	1	1	1	1	1	1
6	1	1	1	1	1	1	1
7	2	2	2	2	2	1	1
8	2	2	2	2	2	2	1
9	2	2	2	2	2	2	2
10	2	2	2	2	2	2	2
11	2	2	2	2	2	2	2
12	2	2	2	2	3	2	2
13	2	2	2	2	3	2	2
14	3	3	3	3	3	2	2
15	3	3	3	3	3	2	2
16	3	3	3	3	3	2	2
17	3	3	3	3	3	2	2
18	2	3	2	3	2	2	1
19	2	2	2	2	2	1	2
20	1	2	2	2	2	1	1
21	2	2	2	2	2	2	1
22	1	2	2	2	2	2	1
23	1	1	1	1	1	1	1

WINTER SEAS. DECEMBER 1 THRU February 28

HR/DAY	MON	TUES	WEDS	THUR	FRI	SAT	SUN
0	1	1	1	1	1	1	1
1	1	1	1	1	1	1	1
2	1	1	1	1	1	1	1
3	1	1	1	1	1	1	1
4	1	1	1	1	1	1	1
5	1	1	1	1	1	1	1
6	1	1	1	1	1	1	1
7	2	2	2	2	2	1	1
8	2	2	2	2	2	1	1
9	2	2	2	2	2	2	1
10	2	2	2	2	2	2	2
11	2	2	2	2	2	2	2
12	2	2	2	2	2	2	2
13	2	2	2	2	2	2	2
14	3	3	3	3	3	2	2
15	3	3	3	3	3	2	3
16	3	3	3	3	3	2	2
17	3	3	3	3	3	2	2
18	2	3	2	2	2	1	2
19	2	2	2	2	2	1	1
20	1	1	2	2	1	1	1
21	1	2	2	2	2	2	1
22	2	2	2	2	3	2	1
23	1	1	1	1	2	1	1

NOTES:

1) THE NEW YORK STATE THRUWAY IS A LIMITED ACCESS, HIGH-SPEED, HIGH-VOLUME HIGHWAY. TRAFFIC SHALL BE MAINTAINED IN ACCORDANCE WITH THE *MANUAL ON UNIFORM TRAFFIC CONTROL DEVICES (MUTCD)*, THE *WORK ZONE TRAFFIC CONTROL PLANS*, AND THE *STANDARD SPECIFICATIONS* SECTION 619 AS AMENDED BY THE AUTHORITY.

2) LANE CLOSURES ON THE THRUWAY SHALL ONLY BE ALLOWED IN ACCORDANCE WITH THESE TRAFFIC MANAGEMENT TABLE(S), UNLESS INDICATED OTHERWISE IN THE CONTRACT PLANS OR PROPOSAL DOCUMENTS.

3) LANE CLOSURE CHARTS SHALL APPLY AS FOLLOWS:

- 1,150 VEH/HR/LANE: APPLIES TO ALL WORK REQUIRING LANE CLOSURE(S) EXCEPT AS PERMITTED BELOW.

- 1,300 VEH/HR/LANE: APPLIES TO NON-EVASIVE WORK WHERE WORKERS AND/OR EQUIPMENT ARE LOCATED 4 FT. OR MORE FROM TRAVEL (SPACE) LANE, OR AS APPROVED BY THE THRUWAY PROJECT ENGINEER. WORK SHOULD BE ABLE TO BE IMMEDIATELY STOPPED AND LANE CLOSURE(S) REMOVED IN THE EVENT QUEUES, GREATER THAN 1 MILE, DEVELOP.

NEW YORK STATE OF OPPORTUNITY. Thruway Authority

U.S. CUSTOMARY STANDARD SHEET

LANE CLOSURE CHARTS
1,300 VEHICLES PER HOUR
BUFFALO DIVISION
(SHEET 23 OF 37)

APPROVED SEPTEMBER 1, 2018

/S/ PATRICK THOMPSON, P.E.
DIRECTOR DESIGN SUPPORT SERVICES BUREAU

ISSUED UNDER DB 18-003

TA 619-37

NIAGARA: I-190 NORTHBOUND INTERCHANGES N3 TO N4 (1,300 VEH/HR/LANE)

LANES REQUIRED TO BE OPEN BY HOUR AND TIME OF DAY

SPRING SEASON MARCH 1 THRU MAY 20

HR/DAY	MON	TUES	WEDS	THUR	FRI	SAT	SUN
0	1	1	1	1	1	1	1
1	1	1	1	1	1	1	1
2	1	1	1	1	1	1	1
3	1	1	1	1	1	1	1
4	1	1	1	1	1	1	1
5	1	1	1	1	1	1	1
6	3	3	3	3	3	1	1
7	3	3	3	3	3	1	1
8	3	3	3	3	3	2	1
9	3	3	3	3	3	2	1
10	2	2	2	2	2	2	2
11	2	2	2	2	2	2	2
12	2	2	2	2	2	2	2
13	2	2	2	2	2	2	2
14	2	2	3	2	3	2	2
15	3	3	3	3	3	2	2
16	3	2	3	3	3	2	2
17	2	3	3	2	3	2	2
18	2	2	3	2	3	3	2
19	2	2	2	2	2	2	2
20	1	2	1	2	2	2	2
21	1	1	1	1	2	2	1
22	1	1	1	1	1	1	1
23	1	1	1	1	1	1	1

SUMMER SEASON MAY 21 THRU SEPTEMBER 15

HR/DAY	MON	TUES	WEDS	THUR	FRI	SAT	SUN
0	1	1	1	1	1	1	1
1	1	1	1	1	1	1	1
2	1	1	1	1	1	1	1
3	1	1	1	1	1	1	1
4	1	1	1	1	1	1	1
5	1	1	1	1	1	1	1
6	3	3	3	3	3	1	1
7	3	3	3	3	3	1	1
8	3	3	3	3	3	2	1
9	3	3	3	3	3	2	1
10	2	2	2	2	2	2	2
11	2	2	2	2	2	2	2
12	2	2	2	2	3	2	2
13	2	2	2	2	3	2	2
14	2	2	3	3	3	2	2
15	3	3	3	3	3	2	2
16	3	3	3	3	3	2	2
17	3	3	3	3	3	2	2
18	2	2	2	3	3	2	2
19	2	2	2	2	2	2	2
20	2	2	2	2	2	2	2
21	1	1	2	2	2	2	2
22	1	1	1	2	2	2	1
23	1	1	1	1	1	1	1

LANES REQUIRED TO BE OPEN BY HOUR AND TIME OF DAY

FALL SEASON SEPTEMBER 16 THRU November 30

HR/DAY	MON	TUES	WEDS	THUR	FRI	SAT	SUN
0	1	1	1	1	1	1	1
1	1	1	1	1	1	1	1
2	1	1	1	1	1	1	1
3	1	1	1	1	1	1	1
4	1	1	1	1	1	1	1
5	1	1	1	1	1	1	1
6	3	3	3	3	3	1	1
7	3	3	3	3	3	1	1
8	3	3	3	3	3	2	1
9	3	3	3	3	3	2	1
10	2	2	2	2	2	2	2
11	2	2	2	2	2	2	2
12	2	2	2	2	2	2	2
13	2	2	2	2	2	2	2
14	3	3	2	3	3	2	2
15	3	3	3	3	3	2	2
16	2	3	3	3	3	2	2
17	2	3	3	3	3	2	2
18	2	3	3	3	3	3	2
19	2	2	2	2	2	2	2
20	1	1	1	2	2	2	2
21	1	1	1	1	2	1	1
22	1	1	1	1	1	1	1
23	1	1	1	1	1	1	1

WINTER SEAS. DECEMBER 1 THRU February 28

HR/DAY	MON	TUES	WEDS	THUR	FRI	SAT	SUN
0	1	1	1	1	1	1	1
1	1	1	1	1	1	1	1
2	1	1	1	1	1	1	1
3	1	1	1	1	1	1	1
4	1	1	1	1	1	1	1
5	1	1	1	1	1	1	1
6	3	3	3	3	3	1	1
7	3	3	3	3	3	1	1
8	3	3	3	3	3	1	1
9	3	3	3	3	3	2	1
10	2	2	2	2	2	2	1
11	2	2	2	2	2	2	2
12	2	2	2	2	2	2	2
13	2	2	2	2	2	2	2
14	2	2	2	2	2	2	2
15	2	3	3	3	3	2	2
16	2	2	3	2	3	2	2
17	2	3	2	3	3	2	2
18	2	3	2	2	3	3	2
19	2	2	2	2	2	2	2
20	1	1	1	1	2	1	1
21	1	1	1	1	1	1	1
22	1	1	1	1	1	1	1
23	1	1	1	1	1	1	1

NIAGARA: I-190 SOUTHBOUND INTERCHANGES N4 TO N3 (1,300 VEH/HR/LANE)

LANES REQUIRED TO BE OPEN BY HOUR AND TIME OF DAY

SPRING SEASON MARCH 1 THRU MAY 20

HR/DAY	MON	TUES	WEDS	THUR	FRI	SAT	SUN
0	1	1	1	1	1	1	1
1	1	1	1	1	1	1	1
2	1	1	1	1	1	1	1
3	1	1	1	1	1	1	1
4	1	1	1	1	1	1	1
5	1	1	1	1	1	1	1
6	1	1	1	1	1	1	1
7	2	2	2	2	2	1	1
8	2	2	2	2	2	2	1
9	2	2	2	2	2	2	1
10	2	2	2	2	2	2	2
11	2	2	2	2	2	2	2
12	2	2	2	2	3	2	2
13	2	2	2	2	3	2	2
14	3	3	3	3	3	2	2
15	3	3	3	3	3	2	2
16	3	3	3	3	3	2	2
17	3	3	3	3	3	2	2
18	2	2	3	3	3	2	2
19	2	2	2	2	2	2	2
20	1	2	2	2	2	1	2
21	2	2	2	2	2	2	1
22	2	2	2	2	2	2	2
23	1	1	1	1	2	2	1

SUMMER SEASON MAY 21 THRU SEPTEMBER 15

HR/DAY	MON	TUES	WEDS	THUR	FRI	SAT	SUN
0	1	1	1	1	1	1	1
1	1	1	1	1	1	1	1
2	1	1	1	1	1	1	1
3	1	1	1	1	1	1	1
4	1	1	1	1	1	1	1
5	1	1	1	1	1	1	1
6	2	1	1	1	1	1	1
7	2	2	2	2	2	1	1
8	2	2	2	2	2	2	1
9	2	2	2	2	2	2	2
10	2	2	2	2	2	2	2
11	2	2	2	2	2	2	2
12	2	2	3	3	3	2	2
13	2	2	3	3	3	2	2
14	3	3	3	3	3	2	2
15	3	3	3	3	3	2	2
16	3	3	3	3	3	2	2
17	3	3	3	3	3	2	2
18	3	3	3	3	2	2	2
19	2	2	2	2	2	2	2
20	2	2	2	2	2	2	2
21	2	2	2	2	2	2	1
22	1	2	2	2	2	2	1
23	2	2	2	2	2	2	1

LANES REQUIRED TO BE OPEN BY HOUR AND TIME OF DAY

FALL SEASON SEPTEMBER 16 THRU November 30

HR/DAY	MON	TUES	WEDS	THUR	FRI	SAT	SUN
0	1	1	1	1	1	1	1
1	1	1	1	1	1	1	1
2	1	1	1	1	1	1	1
3	1	1	1	1	1	1	1
4	1	1	1	1	1	1	1
5	1	1	1	1	1	1	1
6	1	2	1	2	1	1	1
7	2	2	2	2	2	1	1
8	2	2	2	2	2	2	1
9	2	2	2	2	2	2	2
10	2	2	2	2	2	2	2
11	2	2	2	2	3	2	2
12	2	3	2	2	3	2	2
13	2	3	2	3	3	2	2
14	3	3	3	3	3	2	2
15	3	3	3	3	3	2	2
16	3	3	3	3	3	2	2
17	3	3	3	3	3	2	2
18	3	3	3	3	3	2	2
19	2	2	2	2	2	2	2
20	2	2	2	2	2	1	2
21	2	2	2	2	2	2	1
22	1	2	2	2	2	2	1
23	1	1	1	1	2	2	1

WINTER SEAS. DECEMBER 1 THRU February 28

HR/DAY	MON	TUES	WEDS	THUR	FRI	SAT	SUN
0	1	1	1	1	1	1	1
1	1	1	1	1	1	1	1
2	1	1	1	1	1	1	1
3	1	1	1	1	1	1	1
4	1	1	1	1	1	1	1
5	1	1	1	1	1	1	1
6	1	1	1	1	1	1	1
7	2	2	2	2	2	1	1
8	2	2	2	2	2	1	1
9	2	2	2	2	2	2	1
10	2	2	2	2	2	2	2
11	2	2	2	2	2	2	2
12	2	2	2	2	3	2	2
13	2	2	2	2	3	2	2
14	3	3	3	3	3	2	2
15	3	3	3	3	3	2	3
16	3	3	3	3	3	2	2
17	3	3	3	3	3	2	2
18	3	3	3	3	2	2	2
19	2	2	2	2	2	1	1
20	2	2	2	2	2	1	1
21	2	2	2	2	2	2	1
22	2	2	2	2	3	2	1
23	1	1	1	1	2	1	1

NOTES:

1) THE NEW YORK STATE THRUWAY IS A LIMITED ACCESS, HIGH-SPEED, HIGH-VOLUME HIGHWAY. TRAFFIC SHALL BE MAINTAINED IN ACCORDANCE WITH THE *MANUAL ON UNIFORM TRAFFIC CONTROL DEVICES (MUTCD)*, THE *WORK ZONE TRAFFIC CONTROL PLANS*, AND THE *STANDARD SPECIFICATIONS* SECTION 619 AS AMENDED BY THE AUTHORITY.

2) LANE CLOSURES ON THE THRUWAY SHALL ONLY BE ALLOWED IN ACCORDANCE WITH THESE TRAFFIC MANAGEMENT TABLE(S), UNLESS INDICATED OTHERWISE IN THE CONTRACT PLANS OR PROPOSAL DOCUMENTS.

3) LANE CLOSURE CHARTS SHALL APPLY AS FOLLOWS:

- 1,150 VEH/HR/LANE: APPLIES TO ALL WORK REQUIRING LANE CLOSURE(S) EXCEPT AS PERMITTED BELOW.

- 1,300 VEH/HR/LANE: APPLIES TO NON-EVASIVE WORK WHERE WORKERS AND/OR EQUIPMENT ARE LOCATED 4 FT. OR MORE FROM TRAVEL (SPACE) LANE, OR AS APPROVED BY THE THRUWAY PROJECT ENGINEER. WORK SHOULD BE ABLE TO BE IMMEDIATELY STOPPED AND LANE CLOSURE(S) REMOVED IN THE EVENT QUEUES, GREATER THAN 1 MILE, DEVELOP.

NEW YORK STATE OF OPPORTUNITY. Thruway Authority

U.S. CUSTOMARY STANDARD SHEET

LANE CLOSURE CHARTS
1,300 VEHICLES PER HOUR
BUFFALO DIVISION
(SHEET 24 OF 37)

APPROVED SEPTEMBER 1, 2018

/S/ PATRICK THOMPSON, P.E.
DIRECTOR DESIGN SUPPORT SERVICES BUREAU

ISSUED UNDER DB 18-003

TA 619-37

NIAGARA: I-190 NORTHBOUND INTERCHANGES N4 TO N5 (1,300 VEH/HR/LANE)

LANES REQUIRED TO BE OPEN BY HOUR AND TIME OF DAY

SPRING SEASON MARCH 1 THRU MAY 20

HR/DAY	MON	TUES	WEDS	THUR	FRI	SAT	SUN
0	1	1	1	1	1	1	1
1	1	1	1	1	1	1	1
2	1	1	1	1	1	1	1
3	1	1	1	1	1	1	1
4	1	1	1	1	1	1	1
5	1	1	1	1	1	1	1
6	3	3	3	3	3	1	1
7	3	3	3	3	3	1	1
8	3	3	3	3	3	2	1
9	3	3	3	3	3	2	1
10	2	2	2	2	2	2	2
11	2	2	2	2	2	2	2
12	2	2	2	2	2	2	2
13	2	2	2	2	2	2	3
14	3	2	3	2	3	2	2
15	3	3	3	3	3	2	2
16	3	3	3	3	3	2	2
17	3	3	3	3	3	2	2
18	2	2	3	2	3	3	2
19	2	2	2	2	2	2	2
20	2	1	2	2	2	2	2
21	1	1	1	1	2	2	1
22	1	1	1	1	1	1	1
23	1	1	1	1	1	1	1

SUMMER SEASON MAY 21 THRU SEPTEMBER 15

HR/DAY	MON	TUES	WEDS	THUR	FRI	SAT	SUN
0	1	1	1	1	1	1	1
1	1	1	1	1	1	1	1
2	1	1	1	1	1	1	1
3	1	1	1	1	1	1	1
4	1	1	1	1	1	1	1
5	1	1	1	1	1	1	1
6	3	3	3	3	3	1	1
7	3	3	3	3	3	1	1
8	3	3	3	3	3	2	1
9	3	3	3	3	3	2	1
10	2	2	2	2	2	2	2
11	2	2	2	2	2	2	2
12	2	2	2	3	3	2	2
13	2	2	2	2	3	2	2
14	3	3	3	3	3	2	2
15	3	3	3	3	3	2	2
16	3	3	3	3	3	2	2
17	3	3	3	3	3	2	2
18	2	2	2	3	3	2	2
19	2	2	2	2	2	2	2
20	2	2	2	2	2	2	2
21	1	1	2	2	2	2	2
22	1	1	1	2	2	2	1
23	1	1	1	1	1	1	1

LANES REQUIRED TO BE OPEN BY HOUR AND TIME OF DAY

FALL SEASON SEPTEMBER 16 THRU November 30

HR/DAY	MON	TUES	WEDS	THUR	FRI	SAT	SUN
0	1	1	1	1	1	1	1
1	1	1	1	1	1	1	1
2	1	1	1	1	1	1	1
3	1	1	1	1	1	1	1
4	1	1	1	1	1	1	1
5	1	1	1	2	1	1	1
6	3	3	3	3	3	1	1
7	3	3	3	3	3	1	1
8	3	3	3	3	3	2	1
9	3	3	3	3	3	2	1
10	2	2	2	2	2	2	2
11	2	2	2	2	2	2	2
12	2	2	2	2	2	2	2
13	2	2	2	2	3	2	2
14	3	3	3	3	3	2	2
15	3	3	3	3	3	2	2
16	3	3	3	3	3	2	2
17	3	3	3	3	3	2	2
18	2	3	3	3	3	3	2
19	2	2	2	2	2	2	2
20	1	1	2	2	2	2	2
21	1	1	1	1	2	1	1
22	1	1	1	1	1	1	1
23	1	1	1	1	1	1	1

WINTER SEAS. DECEMBER 1 THRU February 28

HR/DAY	MON	TUES	WEDS	THUR	FRI	SAT	SUN
0	1	1	1	1	1	1	1
1	1	1	1	1	1	1	1
2	1	1	1	1	1	1	1
3	1	1	1	1	1	1	1
4	1	1	1	1	1	1	1
5	1	1	1	1	1	1	1
6	3	3	3	3	3	1	1
7	3	3	3	3	3	1	1
8	3	3	3	3	3	1	1
9	3	3	3	3	3	2	1
10	2	2	2	2	2	2	1
11	2	2	2	2	2	2	2
12	2	2	2	2	2	2	2
13	2	2	2	2	2	2	2
14	2	3	2	2	3	2	2
15	3	3	3	3	3	2	2
16	3	3	3	3	3	2	2
17	3	3	3	3	3	2	2
18	2	3	2	2	3	3	2
19	2	2	2	2	2	2	2
20	1	1	1	1	2	1	1
21	1	1	1	1	1	1	1
22	1	1	1	1	1	1	1
23	1	1	1	1	1	1	1

NIAGARA: I-190 SOUTHBOUND INTERCHANGES N5 TO N4 (1,300 VEH/HR/LANE)

LANES REQUIRED TO BE OPEN BY HOUR AND TIME OF DAY

SPRING SEASON MARCH 1 THRU MAY 20

HR/DAY	MON	TUES	WEDS	THUR	FRI	SAT	SUN
0	1	1	1	1	1	1	1
1	1	1	1	1	1	1	1
2	1	1	1	1	1	1	1
3	1	1	1	1	1	1	1
4	1	1	1	1	1	1	1
5	1	1	1	1	1	1	1
6	2	2	2	2	2	1	1
7	3	2	2	2	2	1	1
8	2	2	2	2	2	2	1
9	2	2	2	2	2	2	1
10	2	2	2	2	2	2	2
11	2	2	2	2	3	2	2
12	2	2	2	2	3	2	2
13	2	2	3	3	3	2	2
14	3	3	3	3	3	2	2
15	3	3	3	3	3	2	2
16	3	3	3	3	3	2	2
17	3	3	3	3	3	2	2
18	3	3	3	3	3	2	2
19	2	2	2	2	2	2	2
20	2	2	2	2	2	1	2
21	2	2	2	2	2	2	1
22	1	2	2	2	2	2	2
23	1	1	1	1	2	2	1

SUMMER SEASON MAY 21 THRU SEPTEMBER 15

HR/DAY	MON	TUES	WEDS	THUR	FRI	SAT	SUN
0	1	1	1	1	1	1	1
1	1	1	1	1	1	1	1
2	1	1	1	1	1	1	1
3	1	1	1	1	1	1	1
4	1	1	1	1	1	1	1
5	1	1	1	1	1	1	1
6	2	2	2	2	2	1	1
7	3	2	2	2	2	1	1
8	2	2	2	2	2	2	1
9	2	2	2	2	2	2	2
10	2	2	2	2	2	2	2
11	2	2	2	3	3	2	2
12	3	3	3	3	3	2	2
13	3	3	3	3	3	2	2
14	3	3	3	3	3	2	2
15	3	3	3	3	3	2	2
16	3	3	3	3	3	2	2
17	3	3	3	3	3	2	2
18	3	3	3	3	3	2	2
19	2	2	2	2	2	2	2
20	2	2	2	2	2	2	2
21	2	2	2	2	2	2	2
22	1	2	2	2	2	2	1
23	2	1	2	2	2	2	1

LANES REQUIRED TO BE OPEN BY HOUR AND TIME OF DAY

FALL SEASON SEPTEMBER 16 THRU November 30

HR/DAY	MON	TUES	WEDS	THUR	FRI	SAT	SUN
0	1	1	1	1	1	1	1
1	1	1	1	1	1	1	1
2	1	1	1	1	1	1	1
3	1	1	1	1	1	1	1
4	1	1	1	1	1	1	1
5	1	1	1	1	1	1	1
6	2	2	2	2	2	1	1
7	2	3	2	3	3	1	1
8	2	3	2	3	3	2	1
9	2	2	2	2	2	2	2
10	2	2	2	2	2	2	2
11	2	2	2	2	3	2	2
12	2	3	2	3	3	2	2
13	3	3	3	3	3	2	2
14	3	3	3	3	3	2	2
15	3	3	3	3	3	2	2
16	3	3	3	3	3	2	2
17	3	3	3	3	3	2	2
18	3	3	3	3	3	2	2
19	2	2	2	2	2	2	2
20	2	2	2	2	2	2	2
21	2	2	2	2	2	2	1
22	2	2	2	2	2	2	1
23	1	1	1	1	2	2	1

WINTER SEAS. DECEMBER 1 THRU February 28

HR/DAY	MON	TUES	WEDS	THUR	FRI	SAT	SUN
0	1	1	1	1	1	1	1
1	1	1	1	1	1	1	1
2	1	1	1	1	1	1	1
3	1	1	1	1	1	1	1
4	1	1	1	1	1	1	1
5	1	1	1	1	1	1	1
6	2	2	2	2	2	1	1
7	2	3	3	2	2	1	1
8	2	2	2	2	2	1	1
9	2	2	2	2	2	2	1
10	2	2	2	2	2	2	2
11	2	2	2	2	2	2	2
12	2	2	2	2	3	2	2
13	2	2	3	2	3	2	2
14	3	3	3	3	3	2	2
15	3	3	3	3	3	2	3
16	3	3	3	3	3	2	2
17	3	3	3	3	3	2	2
18	3	3	3	3	3	2	2
19	2	2	2	2	2	1	1
20	2	2	2	2	2	1	1
21	2	2	2	2	2	2	1
22	2	2	2	2	3	2	1
23	1	1	1	1	2	1	1

NOTES:

1) THE NEW YORK STATE THRUWAY IS A LIMITED ACCESS, HIGH-SPEED, HIGH-VOLUME HIGHWAY. TRAFFIC SHALL BE MAINTAINED IN ACCORDANCE WITH THE *MANUAL ON UNIFORM TRAFFIC CONTROL DEVICES (MUTCD)*, THE *WORK ZONE TRAFFIC CONTROL PLANS*, AND THE *STANDARD SPECIFICATIONS* SECTION 619 AS AMENDED BY THE AUTHORITY.

2) LANE CLOSURES ON THE THRUWAY SHALL ONLY BE ALLOWED IN ACCORDANCE WITH THESE TRAFFIC MANAGEMENT TABLE(S), UNLESS INDICATED OTHERWISE IN THE CONTRACT PLANS OR PROPOSAL DOCUMENTS.

3) LANE CLOSURE CHARTS SHALL APPLY AS FOLLOWS:

- 1,150 VEH/HR/LANE: APPLIES TO ALL WORK REQUIRING LANE CLOSURE(S) EXCEPT AS PERMITTED BELOW.

- 1,300 VEH/HR/LANE: APPLIES TO NON-EVASIVE WORK WHERE WORKERS AND/OR EQUIPMENT ARE LOCATED 4 FT. OR MORE FROM TRAVEL (SPACE) LANE, OR AS APPROVED BY THE THRUWAY PROJECT ENGINEER. WORK SHOULD BE ABLE TO BE IMMEDIATELY STOPPED AND LANE CLOSURE(S) REMOVED IN THE EVENT QUEUES, GREATER THAN 1 MILE, DEVELOP.

NEW YORK STATE OF OPPORTUNITY. Thruway Authority

U.S. CUSTOMARY STANDARD SHEET

LANE CLOSURE CHARTS
1,300 VEHICLES PER HOUR
BUFFALO DIVISION
(SHEET 25 OF 37)

APPROVED SEPTEMBER 1, 2018

/S/ PATRICK THOMPSON, P.E.
DIRECTOR DESIGN SUPPORT SERVICES BUREAU

ISSUED UNDER DB 18-003

TA 619-37

NIAGARA: I-190 NORTHBOUND INTERCHANGES N5 TO N6 (1,300 VEH/HR/LANE)

LANES REQUIRED TO BE OPEN BY HOUR AND TIME OF DAY

SPRING SEASON MARCH 1 THRU MAY 20

HR/DAY	MON	TUES	WEDS	THUR	FRI	SAT	SUN
0	1	1	1	1	1	1	1
1	1	1	1	1	1	1	1
2	1	1	1	1	1	1	1
3	1	1	1	1	1	1	1
4	1	1	1	1	1	1	1
5	1	1	1	1	1	1	1
6	3	3	3	3	3	1	1
7	3	3	3	3	3	1	1
8	3	3	3	3	3	2	1
9	3	3	3	3	3	2	1
10	2	2	2	2	2	2	2
11	2	2	2	2	2	2	2
12	2	2	2	2	2	2	2
13	2	2	2	2	2	2	3
14	3	2	3	2	3	2	2
15	3	3	3	3	3	2	2
16	3	3	3	3	3	2	2
17	3	3	3	3	3	2	2
18	2	2	2	2	3	3	2
19	2	2	2	2	2	2	2
20	2	1	2	2	2	2	2
21	1	1	1	1	2	2	1
22	1	1	1	1	2	2	1
23	1	1	1	1	1	1	1

SUMMER SEASON MAY 21 THRU SEPTEMBER 15

HR/DAY	MON	TUES	WEDS	THUR	FRI	SAT	SUN
0	1	1	1	1	1	1	1
1	1	1	1	1	1	1	1
2	1	1	1	1	1	1	1
3	1	1	1	1	1	1	1
4	1	1	1	1	1	1	1
5	1	1	1	1	1	1	1
6	3	3	3	3	3	1	1
7	3	3	3	3	3	1	1
8	3	3	3	3	3	2	1
9	3	3	3	3	3	2	1
10	2	2	2	2	2	2	2
11	2	2	2	2	2	2	2
12	2	2	2	3	3	2	2
13	2	2	2	2	3	2	2
14	3	3	3	3	3	2	2
15	3	3	3	3	3	2	2
16	3	3	3	3	3	2	2
17	3	3	3	3	3	2	2
18	2	2	2	3	3	2	2
19	2	2	2	2	2	2	2
20	2	2	2	2	2	2	2
21	1	1	2	2	2	2	2
22	1	1	1	2	2	2	1
23	1	1	1	1	1	1	1

LANES REQUIRED TO BE OPEN BY HOUR AND TIME OF DAY

FALL SEASON SEPTEMBER 16 THRU November 30

HR/DAY	MON	TUES	WEDS	THUR	FRI	SAT	SUN
0	1	1	1	1	1	1	1
1	1	1	1	1	1	1	1
2	1	1	1	1	1	1	1
3	1	1	1	1	1	1	1
4	1	1	1	1	1	1	1
5	1	1	1	1	1	1	1
6	3	3	3	3	3	1	1
7	3	3	3	3	3	1	1
8	3	3	3	3	3	2	1
9	3	3	3	3	3	2	1
10	2	2	2	2	2	2	2
11	2	2	2	2	3	2	2
12	2	2	2	2	3	2	2
13	2	2	2	2	3	2	2
14	3	3	3	3	3	2	2
15	3	3	3	3	3	2	2
16	3	3	3	3	3	2	2
17	3	3	3	3	3	2	2
18	2	3	3	3	3	3	2
19	2	2	2	2	2	2	2
20	1	2	2	2	2	2	2
21	1	1	2	2	2	2	1
22	1	1	1	1	2	2	1
23	1	1	1	1	1	1	1

WINTER SEAS. DECEMBER 1 THRU February 28

HR/DAY	MON	TUES	WEDS	THUR	FRI	SAT	SUN
0	1	1	1	1	1	1	1
1	1	1	1	1	1	1	1
2	1	1	1	1	1	1	1
3	1	1	1	1	1	1	1
4	1	1	1	1	1	1	1
5	1	1	1	1	1	1	1
6	3	3	3	3	3	1	1
7	3	3	3	3	3	1	1
8	3	3	3	3	3	1	1
9	3	3	3	3	3	2	1
10	2	2	2	2	2	2	1
11	2	2	2	2	2	2	2
12	2	2	2	2	2	2	2
13	2	2	2	2	2	2	2
14	2	3	3	2	3	2	2
15	3	3	3	3	3	2	2
16	3	3	3	3	3	2	2
17	3	3	3	3	3	2	2
18	2	2	2	2	3	3	2
19	2	2	2	2	2	2	2
20	1	1	1	1	2	1	1
21	1	1	1	1	2	1	1
22	1	1	1	1	2	2	1
23	1	1	1	1	1	1	1

NIAGARA: I-190 SOUTHBOUND INTERCHANGES N6 TO N5 (1,300 VEH/HR/LANE)

LANES REQUIRED TO BE OPEN BY HOUR AND TIME OF DAY

SPRING SEASON MARCH 1 THRU MAY 20

HR/DAY	MON	TUES	WEDS	THUR	FRI	SAT	SUN
0	1	1	1	1	1	1	1
1	1	1	1	1	1	1	1
2	1	1	1	1	1	1	1
3	1	1	1	1	1	1	1
4	1	1	1	1	1	1	1
5	1	1	1	1	1	1	1
6	2	2	2	2	2	1	1
7	3	2	3	3	3	1	1
8	3	2	2	2	2	2	1
9	2	2	2	2	2	2	1
10	2	2	2	2	2	2	2
11	2	2	2	2	2	2	2
12	2	2	2	2	3	2	2
13	2	2	2	2	3	2	2
14	3	3	3	3	3	2	2
15	3	3	3	3	3	2	2
16	3	3	3	3	3	2	2
17	3	3	3	3	3	2	2
18	2	2	3	3	3	2	2
19	2	2	2	2	2	2	2
20	2	2	2	2	2	1	2
21	1	2	2	2	2	2	1
22	1	1	1	1	2	2	1
23	1	1	1	1	2	1	1

SUMMER SEASON MAY 21 THRU SEPTEMBER 15

HR/DAY	MON	TUES	WEDS	THUR	FRI	SAT	SUN
0	1	1	1	1	1	1	1
1	1	1	1	1	1	1	1
2	1	1	1	1	1	1	1
3	1	1	1	1	1	1	1
4	1	1	1	1	1	1	1
5	1	1	1	1	1	1	1
6	2	2	2	2	2	1	1
7	3	3	3	3	3	1	1
8	3	2	2	3	3	2	1
9	2	2	2	2	2	2	2
10	2	2	2	2	2	2	2
11	2	2	2	2	3	2	2
12	2	2	3	3	3	2	2
13	3	3	3	3	3	2	2
14	3	3	3	3	3	2	2
15	3	3	3	3	3	2	2
16	3	3	3	3	3	2	2
17	3	3	3	3	3	2	2
18	2	2	3	3	3	2	2
19	2	2	2	2	2	2	2
20	2	2	2	2	2	2	2
21	2	2	2	2	2	2	2
22	1	2	2	2	2	2	1
23	1	1	1	1	2	2	1

LANES REQUIRED TO BE OPEN BY HOUR AND TIME OF DAY

FALL SEASON SEPTEMBER 16 THRU November 30

HR/DAY	MON	TUES	WEDS	THUR	FRI	SAT	SUN
0	1	1	1	1	1	1	1
1	1	1	1	1	1	1	1
2	1	1	1	1	1	1	1
3	1	1	1	1	1	1	1
4	1	1	1	1	1	1	1
5	1	1	1	1	1	1	1
6	2	2	2	2	2	1	1
7	3	3	3	3	3	1	1
8	3	3	3	3	3	2	1
9	2	2	2	2	2	2	2
10	2	2	2	2	2	2	2
11	2	2	3	3	3	2	2
12	2	3	2	3	3	2	2
13	2	3	2	3	3	2	2
14	3	3	3	3	3	2	2
15	3	3	3	3	3	2	2
16	3	3	3	3	3	2	2
17	3	3	3	3	3	2	2
18	2	3	3	3	3	2	2
19	2	2	2	2	2	2	2
20	2	2	2	2	2	1	1
21	1	2	2	2	2	2	1
22	1	2	2	1	2	2	1
23	1	1	1	1	1	1	1

WINTER SEAS. DECEMBER 1 THRU February 28

HR/DAY	MON	TUES	WEDS	THUR	FRI	SAT	SUN
0	1	1	1	1	1	1	1
1	1	1	1	1	1	1	1
2	1	1	1	1	1	1	1
3	1	1	1	1	1	1	1
4	1	1	1	1	1	1	1
5	1	1	1	1	1	1	1
6	2	2	2	2	2	1	1
7	3	3	3	3	3	1	1
8	2	3	3	3	2	1	1
9	2	2	2	2	2	2	1
10	2	2	2	2	2	2	2
11	2	2	2	2	2	2	2
12	2	2	2	2	3	2	2
13	2	2	2	2	3	2	2
14	3	3	3	3	3	2	2
15	3	3	3	3	3	2	2
16	3	3	3	3	3	2	2
17	3	3	3	3	3	2	2
18	2	3	3	3	3	2	2
19	2	2	2	2	2	1	1
20	2	2	2	2	2	1	1
21	1	2	2	2	2	2	1
22	1	2	2	1	2	2	1
23	1	1	1	1	1	1	1

NOTES:

1) THE NEW YORK STATE THRUWAY IS A LIMITED ACCESS, HIGH-SPEED, HIGH-VOLUME HIGHWAY. TRAFFIC SHALL BE MAINTAINED IN ACCORDANCE WITH THE *MANUAL ON UNIFORM TRAFFIC CONTROL DEVICES (MUTCD)*, THE *WORK ZONE TRAFFIC CONTROL PLANS*, AND THE *STANDARD SPECIFICATIONS* SECTION 619 AS AMENDED BY THE AUTHORITY.

2) LANE CLOSURES ON THE THRUWAY SHALL ONLY BE ALLOWED IN ACCORDANCE WITH THESE TRAFFIC MANAGEMENT TABLE(S), UNLESS INDICATED OTHERWISE IN THE CONTRACT PLANS OR PROPOSAL DOCUMENTS.

3) LANE CLOSURE CHARTS SHALL APPLY AS FOLLOWS:

- 1,150 VEH/HR/LANE: APPLIES TO ALL WORK REQUIRING LANE CLOSURE(S) EXCEPT AS PERMITTED BELOW.

- 1,300 VEH/HR/LANE: APPLIES TO NON-EVASIVE WORK WHERE WORKERS AND/OR EQUIPMENT ARE LOCATED 4 FT. OR MORE FROM TRAVEL (SPACE) LANE, OR AS APPROVED BY THE THRUWAY PROJECT ENGINEER. WORK SHOULD BE ABLE TO BE IMMEDIATELY STOPPED AND LANE CLOSURE(S) REMOVED IN THE EVENT QUEUES, GREATER THAN 1 MILE, DEVELOP.

NEW YORK STATE OF OPPORTUNITY. Thruway Authority

U.S. CUSTOMARY STANDARD SHEET

LANE CLOSURE CHARTS
1,300 VEHICLES PER HOUR
BUFFALO DIVISION
(SHEET 26 OF 37)

APPROVED SEPTEMBER 1, 2018

/S/ PATRICK THOMPSON, P.E.
DIRECTOR DESIGN SUPPORT SERVICES BUREAU

ISSUED UNDER DB 18-003

TA 619-37

NIAGARA: I-190 NORTHBOUND INTERCHANGES N8 TO N9 (1,300 VEH/HR/LANE)

LANES REQUIRED TO BE OPEN BY HOUR AND TIME OF DAY

SPRING SEASON MARCH 1 THRU MAY 20

HR/DAY	MON	TUES	WEDS	THUR	FRI	SAT	SUN
0	1	1	1	1	1	1	1
1	1	1	1	1	1	1	1
2	1	1	1	1	1	1	1
3	1	1	1	1	1	1	1
4	1	1	1	1	1	1	1
5	1	1	1	1	1	1	1
6	3	2	2	2	2	1	1
7	3	3	3	3	3	1	1
8	3	3	3	3	3	2	1
9	2	2	2	2	2	2	1
10	2	2	2	2	2	2	2
11	2	2	2	2	2	2	2
12	2	2	2	2	2	2	2
13	2	2	2	2	3	2	2
14	3	3	3	3	3	2	2
15	3	3	3	3	3	2	3
16	3	3	3	3	3	2	2
17	3	3	3	3	3	2	2
18	3	2	3	2	3	2	2
19	2	2	2	2	2	2	2
20	2	2	2	2	2	2	2
21	2	2	2	2	2	2	2
22	2	2	2	2	2	2	2
23	1	1	1	1	2	2	1

SUMMER SEASON MAY 21 THRU SEPTEMBER 15

HR/DAY	MON	TUES	WEDS	THUR	FRI	SAT	SUN
0	1	1	1	1	1	1	1
1	1	1	1	1	1	1	1
2	1	1	1	1	1	1	1
3	1	1	1	1	1	1	1
4	1	1	1	1	1	1	1
5	1	1	1	1	1	1	1
6	3	2	3	3	3	1	1
7	3	3	3	3	3	1	1
8	3	3	3	3	3	2	1
9	2	2	2	2	2	2	1
10	2	2	2	2	2	2	2
11	2	2	2	2	3	2	2
12	3	2	3	3	3	2	2
13	2	2	2	3	3	2	2
14	3	3	3	3	3	3	3
15	3	3	3	3	3	3	3
16	3	3	3	3	3	2	3
17	3	3	3	3	3	2	3
18	3	3	3	3	3	2	2
19	2	2	2	2	2	2	2
20	2	2	2	2	2	2	2
21	2	2	2	2	2	2	2
22	2	2	2	2	2	2	2
23	1	1	2	2	2	2	1

LANES REQUIRED TO BE OPEN BY HOUR AND TIME OF DAY

FALL SEASON SEPTEMBER 16 THRU November 30

HR/DAY	MON	TUES	WEDS	THUR	FRI	SAT	SUN
0	1	1	1	1	1	1	1
1	1	1	1	1	1	1	1
2	1	1	1	1	1	1	1
3	1	1	1	1	1	1	1
4	1	1	1	1	1	1	1
5	1	1	1	1	1	1	1
6	2	3	3	3	3	1	1
7	3	3	3	3	3	1	1
8	3	3	3	3	3	2	1
9	2	2	2	3	2	2	1
10	2	2	2	2	2	2	2
11	2	2	2	2	3	2	2
12	2	3	3	3	3	2	2
13	2	3	3	3	3	2	2
14	3	3	3	3	3	2	2
15	3	3	3	3	3	3	2
16	3	3	3	3	3	2	3
17	3	3	3	3	3	2	3
18	3	3	3	3	3	2	3
19	2	2	2	2	2	2	2
20	2	2	2	2	2	2	2
21	2	2	2	2	2	2	1
22	2	2	2	2	3	2	1
23	1	1	1	1	2	2	1

WINTER SEAS. DECEMBER 1 THRU February 28

HR/DAY	MON	TUES	WEDS	THUR	FRI	SAT	SUN
0	1	1	1	1	1	1	1
1	1	1	1	1	1	1	1
2	1	1	1	1	1	1	1
3	1	1	1	1	1	1	1
4	1	1	1	1	1	1	1
5	1	1	1	1	1	1	1
6	2	3	3	3	2	1	1
7	3	3	3	3	3	1	1
8	3	3	3	3	3	1	1
9	2	2	2	2	2	2	1
10	2	2	2	2	2	2	1
11	2	2	2	2	2	2	2
12	2	2	2	2	2	2	2
13	2	2	2	2	2	2	2
14	3	3	3	3	3	2	2
15	3	3	3	3	3	2	3
16	3	3	3	3	3	2	2
17	3	3	3	3	3	2	2
18	2	3	2	3	3	2	2
19	2	2	2	2	2	2	2
20	2	2	2	2	2	2	2
21	2	2	2	2	2	2	1
22	2	2	2	2	3	2	1
23	1	1	1	1	2	1	1

NIAGARA: I-190 SOUTHBOUND INTERCHANGES N9 TO N8 (1,300 VEH/HR/LANE)

LANES REQUIRED TO BE OPEN BY HOUR AND TIME OF DAY

SPRING SEASON MARCH 1 THRU MAY 20

HR/DAY	MON	TUES	WEDS	THUR	FRI	SAT	SUN
0	1	1	1	1	1	1	1
1	1	1	1	1	1	1	1
2	1	1	1	1	1	1	1
3	1	1	1	1	1	1	1
4	1	1	1	1	1	1	1
5	1	1	1	1	1	1	1
6	3	2	2	2	2	1	1
7	3	3	3	3	3	2	1
8	3	3	3	3	3	2	1
9	3	2	2	2	3	2	2
10	2	2	2	2	2	2	2
11	2	2	2	2	3	2	2
12	2	2	2	2	3	2	2
13	2	2	2	3	3	2	2
14	3	3	3	3	3	2	2
15	3	3	3	3	3	2	2
16	3	3	3	3	3	2	2
17	3	3	3	3	3	2	2
18	2	3	3	3	3	2	2
19	2	2	2	2	2	2	2
20	2	2	2	2	2	2	2
21	1	1	2	2	2	1	1
22	1	1	1	1	1	1	1
23	1	1	1	1	1	1	1

SUMMER SEASON MAY 21 THRU SEPTEMBER 15

HR/DAY	MON	TUES	WEDS	THUR	FRI	SAT	SUN
0	1	1	1	1	1	1	1
1	1	1	1	1	1	1	1
2	1	1	1	1	1	1	1
3	1	1	1	1	1	1	1
4	1	1	1	1	1	1	1
5	1	1	1	1	1	1	1
6	3	2	2	2	2	1	1
7	3	3	3	3	3	2	1
8	3	3	3	3	3	2	2
9	3	2	3	3	3	2	2
10	2	2	2	2	2	2	2
11	2	2	2	3	3	2	2
12	2	2	3	3	3	3	2
13	3	3	3	3	3	3	3
14	3	3	3	3	3	3	2
15	3	3	3	3	3	3	3
16	3	3	3	3	3	3	2
17	3	3	3	3	3	3	2
18	2	2	3	3	3	2	2
19	2	2	2	2	2	2	2
20	2	2	2	2	2	2	2
21	1	2	2	2	2	2	2
22	1	2	2	2	2	2	1
23	1	1	1	1	2	1	1

LANES REQUIRED TO BE OPEN BY HOUR AND TIME OF DAY

FALL SEASON SEPTEMBER 16 THRU November 30

HR/DAY	MON	TUES	WEDS	THUR	FRI	SAT	SUN
0	1	1	1	1	1	1	1
1	1	1	1	1	1	1	1
2	1	1	1	1	1	1	1
3	1	1	1	1	1	1	1
4	1	1	1	1	1	1	1
5	1	1	1	1	1	1	1
6	2	3	2	3	2	1	1
7	3	3	3	3	3	2	1
8	3	3	3	3	3	2	2
9	2	3	2	3	3	2	2
10	2	2	2	2	2	2	3
11	2	2	2	2	3	2	3
12	2	2	2	2	3	2	2
13	2	3	2	2	3	2	2
14	3	3	3	3	3	2	2
15	3	3	3	3	3	2	2
16	3	3	3	3	3	2	2
17	3	3	3	3	3	2	2
18	2	3	3	3	3	2	2
19	2	2	2	2	2	2	2
20	1	2	2	2	2	2	1
21	1	1	1	2	2	1	1
22	1	1	1	1	1	1	1
23	1	1	1	1	1	1	1

WINTER SEAS. DECEMBER 1 THRU February 28

HR/DAY	MON	TUES	WEDS	THUR	FRI	SAT	SUN
0	1	1	1	1	1	1	1
1	1	1	1	1	1	1	1
2	1	1	1	1	1	1	1
3	1	1	1	1	1	1	1
4	1	1	1	1	1	1	1
5	1	1	1	1	1	1	1
6	2	2	2	2	2	1	1
7	3	3	3	3	3	1	1
8	3	3	3	3	3	2	1
9	2	3	3	3	2	2	2
10	2	2	2	2	2	2	2
11	2	2	2	2	2	2	2
12	2	2	2	2	2	2	2
13	2	2	2	2	3	2	2
14	3	3	3	3	3	2	2
15	3	3	3	3	3	2	2
16	3	3	3	3	3	2	2
17	3	3	3	3	3	2	2
18	2	3	3	3	3	2	2
19	2	2	2	2	2	2	1
20	1	2	2	2	2	1	1
21	1	1	1	1	2	1	1
22	1	1	1	1	1	1	1
23	1	1	1	1	1	1	1

NOTES:

1) THE NEW YORK STATE THRUWAY IS A LIMITED ACCESS, HIGH-SPEED, HIGH-VOLUME HIGHWAY. TRAFFIC SHALL BE MAINTAINED IN ACCORDANCE WITH THE *MANUAL ON UNIFORM TRAFFIC CONTROL DEVICES (MUTCD)*, THE *WORK ZONE TRAFFIC CONTROL PLANS*, AND THE *STANDARD SPECIFICATIONS* SECTION 619 AS AMENDED BY THE AUTHORITY.

2) LANE CLOSURES ON THE THRUWAY SHALL ONLY BE ALLOWED IN ACCORDANCE WITH THESE TRAFFIC MANAGEMENT TABLE(S), UNLESS INDICATED OTHERWISE IN THE CONTRACT PLANS OR PROPOSAL DOCUMENTS.

3) LANE CLOSURE CHARTS SHALL APPLY AS FOLLOWS:

- 1,150 VEH/HR/LANE: APPLIES TO ALL WORK REQUIRING LANE CLOSURE(S) EXCEPT AS PERMITTED BELOW.

- 1,300 VEH/HR/LANE: APPLIES TO NON-EVASIVE WORK WHERE WORKERS AND/OR EQUIPMENT ARE LOCATED 4 FT. OR MORE FROM TRAVEL (SPACE) LANE, OR AS APPROVED BY THE THRUWAY PROJECT ENGINEER. WORK SHOULD BE ABLE TO BE IMMEDIATELY STOPPED AND LANE CLOSURE(S) REMOVED IN THE EVENT QUEUES, GREATER THAN 1 MILE, DEVELOP.

NEW YORK STATE OF OPPORTUNITY. Thruway Authority

U.S. CUSTOMARY STANDARD SHEET

LANE CLOSURE CHARTS
1,300 VEHICLES PER HOUR
BUFFALO DIVISION
(SHEET 27 OF 37)

APPROVED SEPTEMBER 1, 2018

/S/ PATRICK THOMPSON, P.E.
DIRECTOR DESIGN SUPPORT SERVICES BUREAU

ISSUED UNDER DB 18-003

TA 619-37

NIAGARA: I-190 NORTHBOUND INTERCHANGES N9 TO N11 (1,300 VEH/HR/LANE)

LANES REQUIRED TO BE OPEN BY HOUR AND TIME OF DAY

SPRING SEASON MARCH 1 THRU MAY 20

HR/DAY	MON	TUES	WEDS	THUR	FRI	SAT	SUN
0	1	1	1	1	1	1	1
1	1	1	1	1	1	1	1
2	1	1	1	1	1	1	1
3	1	1	1	1	1	1	1
4	1	1	1	1	1	1	1
5	1	1	1	1	1	1	1
6	2	2	2	2	2	1	1
7	2	2	2	2	2	1	1
8	2	2	2	2	2	1	1
9	2	2	2	2	2	2	1
10	2	2	2	2	2	2	2
11	2	2	2	2	2	2	2
12	2	2	2	2	2	2	2
13	2	2	2	2	2	2	2
14	2	2	2	2	2	2	2
15	2	2	2	2	2	2	2
16	2	2	2	2	2	2	2
17	2	2	2	2	2	2	2
18	2	2	2	2	2	2	2
19	2	2	2	2	2	2	2
20	1	1	2	2	2	1	2
21	1	2	2	1	2	2	1
22	1	2	2	2	2	2	1
23	1	1	1	1	1	1	1

SUMMER SEASON MAY 21 THRU SEPTEMBER 15

HR/DAY	MON	TUES	WEDS	THUR	FRI	SAT	SUN
0	1	1	1	1	1	1	1
1	1	1	1	1	1	1	1
2	1	1	1	1	1	1	1
3	1	1	1	1	1	1	1
4	1	1	1	1	1	1	1
5	1	1	1	1	1	1	1
6	2	2	2	2	2	1	1
7	2	2	2	2	2	1	1
8	2	2	2	2	2	1	1
9	2	2	2	2	2	2	1
10	2	2	2	2	2	2	2
11	2	2	2	2	2	2	2
12	2	2	2	2	2	2	2
13	2	2	2	2	2	2	2
14	2	2	2	2	2	2	2
15	2	2	2	2	2	2	2
16	2	2	2	2	2	2	2
17	2	2	2	2	2	2	2
18	2	2	2	2	2	2	2
19	2	2	2	2	2	2	2
20	2	2	2	2	2	2	2
21	1	2	2	2	2	2	2
22	1	1	2	2	2	2	1
23	1	1	1	1	2	1	1

LANES REQUIRED TO BE OPEN BY HOUR AND TIME OF DAY

FALL SEASON SEPTEMBER 16 THRU November 30

HR/DAY	MON	TUES	WEDS	THUR	FRI	SAT	SUN
0	1	1	1	1	1	1	1
1	1	1	1	1	1	1	1
2	1	1	1	1	1	1	1
3	1	1	1	1	1	1	1
4	1	1	1	1	1	1	1
5	1	1	1	1	1	1	1
6	2	2	2	2	2	1	1
7	2	2	2	2	2	1	1
8	2	2	2	2	2	1	1
9	2	2	2	2	2	2	1
10	2	2	2	2	2	2	2
11	2	2	2	2	2	2	2
12	2	2	2	2	2	2	2
13	2	2	2	2	2	2	2
14	2	2	2	2	2	2	2
15	2	2	2	2	2	2	2
16	2	2	2	2	2	2	2
17	2	2	2	2	2	2	2
18	2	2	2	2	2	2	2
19	2	2	2	2	2	2	2
20	1	2	2	2	2	1	1
21	1	2	2	2	2	2	1
22	1	2	2	2	2	2	1
23	1	1	1	1	1	1	1

WINTER SEAS. DECEMBER 1 THRU February 28

HR/DAY	MON	TUES	WEDS	THUR	FRI	SAT	SUN
0	1	1	1	1	1	1	1
1	1	1	1	1	1	1	1
2	1	1	1	1	1	1	1
3	1	1	1	1	1	1	1
4	1	1	1	1	1	1	1
5	1	1	1	1	1	1	1
6	2	2	2	2	2	1	1
7	2	2	2	2	2	1	1
8	2	2	2	2	2	1	1
9	2	2	2	2	2	1	1
10	2	2	2	2	2	2	1
11	2	2	2	2	2	2	1
12	2	2	2	2	2	2	2
13	2	2	2	2	2	2	2
14	2	2	2	2	2	2	2
15	2	2	2	2	2	2	2
16	2	2	2	2	2	2	2
17	2	2	2	2	2	2	2
18	2	2	2	2	2	2	2
19	2	2	2	2	2	1	1
20	1	1	1	1	1	1	1
21	1	2	2	2	2	2	1
22	1	2	2	2	2	2	1
23	1	1	1	1	1	1	1

NIAGARA: I-190 SOUTHBOUND INTERCHANGES N11 TO N9 (1,300 VEH/HR/LANE)

LANES REQUIRED TO BE OPEN BY HOUR AND TIME OF DAY

SPRING SEASON MARCH 1 THRU MAY 20

HR/DAY	MON	TUES	WEDS	THUR	FRI	SAT	SUN
0	1	1	1	1	1	1	1
1	1	1	1	1	1	1	1
2	1	1	1	1	1	1	1
3	1	1	1	1	1	1	1
4	1	1	1	1	1	1	1
5	1	1	1	1	1	1	1
6	2	2	2	2	2	1	1
7	2	2	2	2	2	1	1
8	2	2	2	2	2	2	1
9	2	2	2	2	2	2	1
10	2	2	2	2	2	2	2
11	2	2	2	2	2	2	2
12	2	2	2	2	2	2	2
13	2	2	2	2	2	2	2
14	2	2	2	2	2	2	2
15	2	2	2	2	2	2	2
16	2	2	2	2	2	2	2
17	2	2	2	2	2	2	2
18	2	2	2	2	2	2	2
19	2	2	2	2	2	2	2
20	1	1	2	2	2	2	1
21	1	1	1	1	2	1	1
22	1	1	1	1	1	1	1
23	1	1	1	1	1	1	1

SUMMER SEASON MAY 21 THRU SEPTEMBER 15

HR/DAY	MON	TUES	WEDS	THUR	FRI	SAT	SUN
0	1	1	1	1	1	1	1
1	1	1	1	1	1	1	1
2	1	1	1	1	1	1	1
3	1	1	1	1	1	1	1
4	1	1	1	1	1	1	1
5	1	1	1	1	1	1	1
6	2	2	2	2	2	1	1
7	2	2	2	2	2	1	1
8	2	2	2	2	2	2	1
9	2	2	2	2	2	2	2
10	2	2	2	2	2	2	2
11	2	2	2	2	2	2	2
12	2	2	2	2	2	2	2
13	2	2	2	2	2	2	2
14	2	2	2	2	2	2	2
15	2	2	2	2	2	2	2
16	2	2	2	2	2	2	2
17	2	2	2	2	2	2	2
18	2	2	2	2	2	2	2
19	2	2	2	2	2	2	2
20	2	2	2	2	2	2	2
21	1	1	2	2	2	2	1
22	1	1	1	1	2	2	1
23	1	1	1	1	1	1	1

LANES REQUIRED TO BE OPEN BY HOUR AND TIME OF DAY

FALL SEASON SEPTEMBER 16 THRU November 30

HR/DAY	MON	TUES	WEDS	THUR	FRI	SAT	SUN
0	1	1	1	1	1	1	1
1	1	1	1	1	1	1	1
2	1	1	1	1	1	1	1
3	1	1	1	1	1	1	1
4	1	1	1	1	1	1	1
5	1	1	1	1	1	1	1
6	2	2	2	2	2	1	1
7	2	2	2	2	2	1	1
8	2	2	2	2	2	2	1
9	2	2	2	2	2	2	2
10	2	2	2	2	2	2	2
11	2	2	2	2	2	2	2
12	2	2	2	2	2	2	2
13	2	2	2	2	2	2	2
14	2	2	2	2	2	2	2
15	2	2	2	2	2	2	2
16	2	2	2	2	2	2	2
17	2	2	2	2	2	2	2
18	2	2	2	2	2	2	2
19	2	2	2	2	2	2	1
20	1	2	2	2	2	1	1
21	1	1	1	1	1	1	1
22	1	1	1	1	1	1	1
23	1	1	1	1	1	1	1

WINTER SEAS. DECEMBER 1 THRU February 28

HR/DAY	MON	TUES	WEDS	THUR	FRI	SAT	SUN
0	1	1	1	1	1	1	1
1	1	1	1	1	1	1	1
2	1	1	1	1	1	1	1
3	1	1	1	1	1	1	1
4	1	1	1	1	1	1	1
5	1	1	1	1	1	1	1
6	2	2	2	2	2	1	1
7	2	2	2	2	2	1	1
8	2	2	2	2	2	1	1
9	2	2	2	2	2	1	1
10	2	2	2	2	2	2	2
11	2	2	2	2	2	2	2
12	2	2	2	2	2	2	2
13	2	2	2	2	2	2	2
14	2	2	2	2	2	2	2
15	2	2	2	2	2	2	2
16	2	2	2	2	2	2	2
17	2	2	2	2	2	2	2
18	2	2	2	2	2	2	2
19	2	2	2	2	2	2	1
20	1	1	1	1	1	1	1
21	1	1	1	1	1	1	1
22	1	1	1	1	1	1	1
23	1	1	1	1	1	1	1

NOTES:

1) THE NEW YORK STATE THRUWAY IS A LIMITED ACCESS, HIGH-SPEED, HIGH-VOLUME HIGHWAY. TRAFFIC SHALL BE MAINTAINED IN ACCORDANCE WITH THE *MANUAL ON UNIFORM TRAFFIC CONTROL DEVICES (MUTCD)*, THE *WORK ZONE TRAFFIC CONTROL PLANS*, AND THE *STANDARD SPECIFICATIONS* SECTION 619 AS AMENDED BY THE AUTHORITY.

2) LANE CLOSURES ON THE THRUWAY SHALL ONLY BE ALLOWED IN ACCORDANCE WITH THESE TRAFFIC MANAGEMENT TABLE(S), UNLESS INDICATED OTHERWISE IN THE CONTRACT PLANS OR PROPOSAL DOCUMENTS.

3) LANE CLOSURE CHARTS SHALL APPLY AS FOLLOWS:

- 1,150 VEH/HR/LANE: APPLIES TO ALL WORK REQUIRING LANE CLOSURE(S) EXCEPT AS PERMITTED BELOW.

- 1,300 VEH/HR/LANE: APPLIES TO NON-EVASIVE WORK WHERE WORKERS AND/OR EQUIPMENT ARE LOCATED 4 FT. OR MORE FROM TRAVEL (SPACE) LANE, OR AS APPROVED BY THE THRUWAY PROJECT ENGINEER. WORK SHOULD BE ABLE TO BE IMMEDIATELY STOPPED AND LANE CLOSURE(S) REMOVED IN THE EVENT QUEUES, GREATER THAN 1 MILE, DEVELOP.

NEW YORK STATE OF OPPORTUNITY. Thruway Authority

U.S. CUSTOMARY STANDARD SHEET

LANE CLOSURE CHARTS
1,300 VEHICLES PER HOUR
BUFFALO DIVISION
(SHEET 28 OF 37)

APPROVED SEPTEMBER 1, 2018

/S/ PATRICK THOMPSON, P.E.
DIRECTOR DESIGN SUPPORT SERVICES BUREAU

ISSUED UNDER DB 18-003

TA 619-37

NIAGARA: I-190 NORTHBOUND INTERCHANGES N11 TO N12 (1,300 VEH/HR/LANE)

LANES REQUIRED TO BE OPEN BY HOUR AND TIME OF DAY

SPRING SEASON MARCH 1 THRU MAY 20

HR/DAY	MON	TUES	WEDS	THUR	FRI	SAT	SUN
0	1	1	1	1	1	1	1
1	1	1	1	1	1	1	1
2	1	1	1	1	1	1	1
3	1	1	1	1	1	1	1
4	1	1	1	1	1	1	1
5	1	1	1	1	1	1	1
6	2	2	2	2	2	1	1
7	2	2	2	2	2	1	1
8	2	2	2	2	2	1	1
9	2	2	2	2	2	2	1
10	2	2	2	2	2	2	2
11	2	2	2	2	2	2	2
12	2	2	2	2	2	2	2
13	2	2	2	2	2	2	2
14	2	2	2	2	2	2	2
15	2	2	2	2	2	2	2
16	2	2	2	2	2	2	2
17	2	2	2	2	2	2	2
18	2	2	2	2	2	2	2
19	2	2	2	2	2	2	2
20	1	2	2	2	2	1	2
21	1	2	2	2	2	2	1
22	1	2	2	2	2	2	1
23	1	1	1	1	1	1	1

SUMMER SEASON MAY 21 THRU SEPTEMBER 15

HR/DAY	MON	TUES	WEDS	THUR	FRI	SAT	SUN
0	1	1	1	1	1	1	1
1	1	1	1	1	1	1	1
2	1	1	1	1	1	1	1
3	1	1	1	1	1	1	1
4	1	1	1	1	1	1	1
5	1	1	1	1	1	1	1
6	2	2	2	2	2	1	1
7	2	2	2	2	2	1	1
8	2	2	2	2	2	1	1
9	2	2	2	2	2	2	1
10	2	2	2	2	2	2	2
11	2	2	2	2	2	2	2
12	2	2	2	2	2	2	2
13	2	2	2	2	2	2	2
14	2	2	2	2	2	2	2
15	2	2	2	2	2	2	2
16	2	2	2	2	2	2	2
17	2	2	2	2	2	2	2
18	2	2	2	2	2	2	2
19	2	2	2	2	2	2	2
20	2	2	2	2	2	2	2
21	1	2	2	2	2	2	1
22	1	1	1	2	2	2	1
23	1	1	1	1	2	1	1

LANES REQUIRED TO BE OPEN BY HOUR AND TIME OF DAY

FALL SEASON SEPTEMBER 16 THRU November 30

HR/DAY	MON	TUES	WEDS	THUR	FRI	SAT	SUN
0	1	1	1	1	1	1	1
1	1	1	1	1	1	1	1
2	1	1	1	1	1	1	1
3	1	1	1	1	1	1	1
4	1	1	1	1	1	1	1
5	1	1	1	1	1	1	1
6	2	2	2	2	2	1	1
7	2	2	2	2	2	1	1
8	2	2	2	2	2	1	1
9	2	2	2	2	2	2	1
10	2	2	2	2	2	2	1
11	2	2	2	2	2	2	2
12	2	2	2	2	2	2	2
13	2	2	2	2	2	2	2
14	2	2	2	2	2	2	2
15	2	2	2	2	2	2	2
16	2	2	2	2	2	2	2
17	2	2	2	2	2	2	2
18	2	2	2	2	2	2	2
19	2	2	2	2	2	2	2
20	1	2	2	2	2	1	1
21	1	2	2	2	2	2	1
22	1	2	2	2	2	2	1
23	1	1	1	1	1	1	1

WINTER SEAS. DECEMBER 1 THRU February 28

HR/DAY	MON	TUES	WEDS	THUR	FRI	SAT	SUN
0	1	1	1	1	1	1	1
1	1	1	1	1	1	1	1
2	1	1	1	1	1	1	1
3	1	1	1	1	1	1	1
4	1	1	1	1	1	1	1
5	1	1	1	1	1	1	1
6	2	2	2	2	2	1	1
7	2	2	2	2	2	1	1
8	2	2	2	2	2	1	1
9	2	2	2	2	2	1	1
10	2	2	2	2	2	2	1
11	2	2	2	2	2	2	1
12	2	2	2	2	2	2	2
13	2	2	2	2	2	2	2
14	2	2	2	2	2	2	2
15	2	2	2	2	2	2	2
16	2	2	2	2	2	2	2
17	2	2	2	2	2	2	2
18	2	2	2	2	2	2	2
19	2	2	2	2	2	1	1
20	1	1	2	2	1	1	1
21	1	2	1	2	2	2	1
22	1	2	2	2	2	2	1
23	1	1	1	1	1	1	1

NIAGARA: I-190 SOUTHBOUND INTERCHANGES N12 TO N11 (1,300 VEH/HR/LANE)

LANES REQUIRED TO BE OPEN BY HOUR AND TIME OF DAY

SPRING SEASON MARCH 1 THRU MAY 20

HR/DAY	MON	TUES	WEDS	THUR	FRI	SAT	SUN
0	1	1	1	1	1	1	1
1	1	1	1	1	1	1	1
2	1	1	1	1	1	1	1
3	1	1	1	1	1	1	1
4	1	1	1	1	1	1	1
5	1	1	1	1	1	1	1
6	2	2	2	2	2	1	1
7	2	2	2	2	2	1	1
8	2	2	2	2	2	1	1
9	2	2	2	2	2	2	1
10	2	2	2	2	2	2	2
11	2	2	2	2	2	2	2
12	2	2	2	2	2	2	2
13	2	2	2	2	2	2	2
14	2	2	2	2	2	2	2
15	2	2	2	2	2	2	2
16	2	2	2	2	2	2	2
17	2	2	2	2	2	2	2
18	2	2	2	2	2	2	2
19	2	2	2	2	2	2	2
20	1	2	2	2	2	1	2
21	1	2	2	2	2	2	1
22	1	2	2	2	2	2	1
23	1	1	1	1	1	1	1

SUMMER SEASON MAY 21 THRU SEPTEMBER 15

HR/DAY	MON	TUES	WEDS	THUR	FRI	SAT	SUN
0	1	1	1	1	1	1	1
1	1	1	1	1	1	1	1
2	1	1	1	1	1	1	1
3	1	1	1	1	1	1	1
4	1	1	1	1	1	1	1
5	1	1	1	1	1	1	1
6	2	2	2	2	2	1	1
7	2	2	2	2	2	1	1
8	2	2	2	2	2	1	1
9	2	2	2	2	2	2	1
10	2	2	2	2	2	2	2
11	2	2	2	2	2	2	2
12	2	2	2	2	2	2	2
13	2	2	2	2	2	2	2
14	2	2	2	2	2	2	2
15	2	2	2	2	2	2	2
16	2	2	2	2	2	2	2
17	2	2	2	2	2	2	2
18	2	2	2	2	2	2	2
19	2	2	2	2	2	2	2
20	2	2	2	2	2	2	2
21	1	2	2	2	2	2	1
22	1	1	1	2	2	2	1
23	1	1	1	1	2	1	1

LANES REQUIRED TO BE OPEN BY HOUR AND TIME OF DAY

FALL SEASON SEPTEMBER 16 THRU November 30

HR/DAY	MON	TUES	WEDS	THUR	FRI	SAT	SUN
0	1	1	1	1	1	1	1
1	1	1	1	1	1	1	1
2	1	1	1	1	1	1	1
3	1	1	1	1	1	1	1
4	1	1	1	1	1	1	1
5	1	1	1	1	1	1	1
6	2	2	2	2	2	1	1
7	2	2	2	2	2	1	1
8	2	2	2	2	2	1	1
9	2	2	2	2	2	2	1
10	2	2	2	2	2	2	1
11	2	2	2	2	2	2	2
12	2	2	2	2	2	2	2
13	2	2	2	2	2	2	2
14	2	2	2	2	2	2	2
15	2	2	2	2	2	2	2
16	2	2	2	2	2	2	2
17	2	2	2	2	2	2	2
18	2	2	2	2	2	2	2
19	2	2	2	2	2	2	2
20	1	2	2	2	2	1	1
21	1	2	2	2	2	2	1
22	1	2	2	2	2	2	1
23	1	1	1	1	1	1	1

WINTER SEAS. DECEMBER 1 THRU February 28

HR/DAY	MON	TUES	WEDS	THUR	FRI	SAT	SUN
0	1	1	1	1	1	1	1
1	1	1	1	1	1	1	1
2	1	1	1	1	1	1	1
3	1	1	1	1	1	1	1
4	1	1	1	1	1	1	1
5	1	1	1	1	1	1	1
6	2	2	2	2	2	1	1
7	2	2	2	2	2	1	1
8	2	2	2	2	2	1	1
9	2	2	2	2	2	1	1
10	2	2	2	2	2	2	1
11	2	2	2	2	2	2	1
12	2	2	2	2	2	2	2
13	2	2	2	2	2	2	2
14	2	2	2	2	2	2	2
15	2	2	2	2	2	2	2
16	2	2	2	2	2	2	2
17	2	2	2	2	2	2	2
18	2	2	2	2	2	2	2
19	2	2	2	2	2	1	1
20	1	1	2	2	1	1	1
21	1	2	1	2	2	2	1
22	1	2	2	2	2	2	1
23	1	1	1	1	1	1	1

NOTES:

1) THE NEW YORK STATE THRUWAY IS A LIMITED ACCESS, HIGH-SPEED, HIGH-VOLUME HIGHWAY. TRAFFIC SHALL BE MAINTAINED IN ACCORDANCE WITH THE *MANUAL ON UNIFORM TRAFFIC CONTROL DEVICES (MUTCD)*, THE *WORK ZONE TRAFFIC CONTROL PLANS*, AND THE *STANDARD SPECIFICATIONS* SECTION 619 AS AMENDED BY THE AUTHORITY.

2) LANE CLOSURES ON THE THRUWAY SHALL ONLY BE ALLOWED IN ACCORDANCE WITH THESE TRAFFIC MANAGEMENT TABLE(S), UNLESS INDICATED OTHERWISE IN THE CONTRACT PLANS OR PROPOSAL DOCUMENTS.

3) LANE CLOSURE CHARTS SHALL APPLY AS FOLLOWS:

- 1,150 VEH/HR/LANE: APPLIES TO ALL WORK REQUIRING LANE CLOSURE(S) EXCEPT AS PERMITTED BELOW.

- 1,300 VEH/HR/LANE: APPLIES TO NON-EVASIVE WORK WHERE WORKERS AND/OR EQUIPMENT ARE LOCATED 4 FT. OR MORE FROM TRAVEL (SPACE) LANE, OR AS APPROVED BY THE THRUWAY PROJECT ENGINEER. WORK SHOULD BE ABLE TO BE IMMEDIATELY STOPPED AND LANE CLOSURE(S) REMOVED IN THE EVENT QUEUES, GREATER THAN 1 MILE, DEVELOP.

NEW YORK STATE OF OPPORTUNITY. Thruway Authority

U.S. CUSTOMARY STANDARD SHEET

LANE CLOSURE CHARTS
1,300 VEHICLES PER HOUR
BUFFALO DIVISION
(SHEET 29 OF 37)

APPROVED SEPTEMBER 1, 2018

/S/ PATRICK THOMPSON, P.E.
DIRECTOR DESIGN SUPPORT SERVICES BUREAU

ISSUED UNDER DB 18-003

TA 619-37

NIAGARA: I-190 NORTHBOUND INTERCHANGES N12 TO N13 (1,300 VEH/HR/LANE)

LANES REQUIRED TO BE OPEN BY HOUR AND TIME OF DAY

SPRING SEASON MARCH 1 THRU MAY 20

HR/DAY	MON	TUES	WEDS	THUR	FRI	SAT	SUN
0	1	1	1	1	1	1	1
1	1	1	1	1	1	1	1
2	1	1	1	1	1	1	1
3	1	1	1	1	1	1	1
4	1	1	1	1	1	1	1
5	1	1	1	1	1	1	1
6	2	2	2	2	2	1	1
7	2	2	2	2	2	1	1
8	2	2	2	2	2	1	1
9	2	2	2	2	2	1	1
10	2	2	2	2	2	2	1
11	2	2	2	2	2	2	2
12	2	2	2	2	2	2	2
13	2	2	2	2	2	2	2
14	2	2	2	2	2	2	2
15	2	2	2	2	2	2	2
16	2	2	2	2	2	2	2
17	2	2	2	2	2	2	2
18	2	2	2	2	2	2	2
19	2	2	2	2	2	2	2
20	1	1	2	2	2	1	2
21	1	2	1	1	2	2	1
22	1	2	2	2	2	2	1
23	1	1	1	1	1	1	1

SUMMER SEASON MAY 21 THRU SEPTEMBER 15

HR/DAY	MON	TUES	WEDS	THUR	FRI	SAT	SUN
0	1	1	1	1	1	1	1
1	1	1	1	1	1	1	1
2	1	1	1	1	1	1	1
3	1	1	1	1	1	1	1
4	1	1	1	1	1	1	1
5	1	1	1	1	1	1	1
6	2	2	2	2	2	1	1
7	2	2	2	2	2	1	1
8	2	2	2	2	2	1	1
9	2	2	2	2	2	1	1
10	2	2	2	2	2	2	2
11	2	2	2	2	2	2	2
12	2	2	2	2	2	2	2
13	2	2	2	2	2	2	2
14	2	2	2	2	2	2	2
15	2	2	2	2	2	2	2
16	2	2	2	2	2	2	2
17	2	2	2	2	2	2	2
18	2	2	2	2	2	2	2
19	2	2	2	2	2	2	2
20	2	2	2	2	2	2	2
21	1	1	2	2	2	2	1
22	1	1	1	2	2	2	1
23	1	1	1	1	2	1	1

LANES REQUIRED TO BE OPEN BY HOUR AND TIME OF DAY

FALL SEASON SEPTEMBER 16 THRU November 30

HR/DAY	MON	TUES	WEDS	THUR	FRI	SAT	SUN
0	1	1	1	1	1	1	1
1	1	1	1	1	1	1	1
2	1	1	1	1	1	1	1
3	1	1	1	1	1	1	1
4	1	1	1	1	1	1	1
5	1	1	1	1	1	1	1
6	2	2	2	2	2	1	1
7	2	2	2	2	2	1	1
8	2	2	2	2	2	1	1
9	2	2	2	2	2	2	1
10	2	2	2	2	2	2	1
11	2	2	2	2	2	2	2
12	2	2	2	2	2	2	2
13	2	2	2	2	2	2	2
14	2	2	2	2	2	2	2
15	2	2	2	2	2	2	2
16	2	2	2	2	2	2	2
17	2	2	2	2	2	2	2
18	2	2	2	2	2	2	2
19	2	2	2	2	2	2	2
20	1	2	2	2	2	1	1
21	1	2	2	2	2	2	1
22	1	2	2	2	2	2	1
23	1	1	1	1	1	1	1

WINTER SEAS. DECEMBER 1 THRU February 28

HR/DAY	MON	TUES	WEDS	THUR	FRI	SAT	SUN
0	1	1	1	1	1	1	1
1	1	1	1	1	1	1	1
2	1	1	1	1	1	1	1
3	1	1	1	1	1	1	1
4	1	1	1	1	1	1	1
5	1	1	1	1	1	1	1
6	2	2	2	2	2	1	1
7	2	2	2	2	2	1	1
8	2	2	2	2	2	1	1
9	2	2	2	2	2	1	1
10	2	2	2	2	2	1	1
11	2	2	2	2	2	2	1
12	2	2	2	2	2	2	2
13	2	2	2	2	2	2	2
14	2	2	2	2	2	2	2
15	2	2	2	2	2	2	2
16	2	2	2	2	2	2	2
17	2	2	2	2	2	2	2
18	2	2	2	2	2	2	2
19	2	2	2	2	2	1	1
20	1	1	1	1	1	1	1
21	1	2	1	2	2	2	1
22	1	2	2	2	2	2	1
23	1	1	1	1	1	1	1

NIAGARA: I-190 SOUTHBOUND INTERCHANGES N13 TO N12 (1,300 VEH/HR/LANE)

LANES REQUIRED TO BE OPEN BY HOUR AND TIME OF DAY

SPRING SEASON MARCH 1 THRU MAY 20

HR/DAY	MON	TUES	WEDS	THUR	FRI	SAT	SUN
0	1	1	1	1	1	1	1
1	1	1	1	1	1	1	1
2	1	1	1	1	1	1	1
3	1	1	1	1	1	1	1
4	1	1	1	1	1	1	1
5	1	1	1	1	1	1	1
6	2	2	2	2	2	1	1
7	2	2	2	2	2	1	1
8	2	2	2	2	2	1	1
9	2	2	2	2	2	1	1
10	2	2	2	2	2	2	1
11	2	2	2	2	2	2	2
12	2	2	2	2	2	2	2
13	2	2	2	2	2	2	2
14	2	2	2	2	2	2	2
15	2	2	2	2	2	2	2
16	2	2	2	2	2	2	2
17	2	2	2	2	2	2	2
18	2	2	2	2	2	2	2
19	2	2	2	2	2	2	2
20	1	1	2	2	2	1	2
21	1	2	1	1	2	2	1
22	1	2	2	2	2	2	1
23	1	1	1	1	1	1	1

SUMMER SEASON MAY 21 THRU SEPTEMBER 15

HR/DAY	MON	TUES	WEDS	THUR	FRI	SAT	SUN
0	1	1	1	1	1	1	1
1	1	1	1	1	1	1	1
2	1	1	1	1	1	1	1
3	1	1	1	1	1	1	1
4	1	1	1	1	1	1	1
5	1	1	1	1	1	1	1
6	2	2	2	2	2	1	1
7	2	2	2	2	2	1	1
8	2	2	2	2	2	1	1
9	2	2	2	2	2	1	1
10	2	2	2	2	2	2	2
11	2	2	2	2	2	2	2
12	2	2	2	2	2	2	2
13	2	2	2	2	2	2	2
14	2	2	2	2	2	2	2
15	2	2	2	2	2	2	2
16	2	2	2	2	2	2	2
17	2	2	2	2	2	2	2
18	2	2	2	2	2	2	2
19	2	2	2	2	2	2	2
20	2	2	2	2	2	2	2
21	1	1	2	2	2	2	1
22	1	1	1	2	2	2	1
23	1	1	1	1	2	1	1

LANES REQUIRED TO BE OPEN BY HOUR AND TIME OF DAY

FALL SEASON SEPTEMBER 16 THRU November 30

HR/DAY	MON	TUES	WEDS	THUR	FRI	SAT	SUN
0	1	1	1	1	1	1	1
1	1	1	1	1	1	1	1
2	1	1	1	1	1	1	1
3	1	1	1	1	1	1	1
4	1	1	1	1	1	1	1
5	1	1	1	1	1	1	1
6	2	2	2	2	2	1	1
7	2	2	2	2	2	1	1
8	2	2	2	2	2	1	1
9	2	2	2	2	2	2	1
10	2	2	2	2	2	2	1
11	2	2	2	2	2	2	2
12	2	2	2	2	2	2	2
13	2	2	2	2	2	2	2
14	2	2	2	2	2	2	2
15	2	2	2	2	2	2	2
16	2	2	2	2	2	2	2
17	2	2	2	2	2	2	2
18	2	2	2	2	2	2	2
19	2	2	2	2	2	2	2
20	1	2	2	2	2	1	1
21	1	2	2	2	2	2	1
22	1	2	2	2	2	2	1
23	1	1	1	1	1	1	1

WINTER SEAS. DECEMBER 1 THRU February 28

HR/DAY	MON	TUES	WEDS	THUR	FRI	SAT	SUN
0	1	1	1	1	1	1	1
1	1	1	1	1	1	1	1
2	1	1	1	1	1	1	1
3	1	1	1	1	1	1	1
4	1	1	1	1	1	1	1
5	1	1	1	1	1	1	1
6	2	2	2	2	2	1	1
7	2	2	2	2	2	1	1
8	2	2	2	2	2	1	1
9	2	2	2	2	2	1	1
10	2	2	2	2	2	1	1
11	2	2	2	2	2	2	1
12	2	2	2	2	2	2	2
13	2	2	2	2	2	2	2
14	2	2	2	2	2	2	2
15	2	2	2	2	2	2	2
16	2	2	2	2	2	2	2
17	2	2	2	2	2	2	2
18	2	2	2	2	2	2	2
19	2	2	2	2	2	1	1
20	1	1	1	1	1	1	1
21	1	2	1	2	2	2	1
22	1	2	2	2	2	2	1
23	1	1	1	1	1	1	1

NOTES:

1) THE NEW YORK STATE THRUWAY IS A LIMITED ACCESS, HIGH-SPEED, HIGH-VOLUME HIGHWAY. TRAFFIC SHALL BE MAINTAINED IN ACCORDANCE WITH THE *MANUAL ON UNIFORM TRAFFIC CONTROL DEVICES (MUTCD)*, THE *WORK ZONE TRAFFIC CONTROL PLANS*, AND THE *STANDARD SPECIFICATIONS* SECTION 619 AS AMENDED BY THE AUTHORITY.

2) LANE CLOSURES ON THE THRUWAY SHALL ONLY BE ALLOWED IN ACCORDANCE WITH THESE TRAFFIC MANAGEMENT TABLE(S), UNLESS INDICATED OTHERWISE IN THE CONTRACT PLANS OR PROPOSAL DOCUMENTS.

3) LANE CLOSURE CHARTS SHALL APPLY AS FOLLOWS:

- 1,150 VEH/HR/LANE: APPLIES TO ALL WORK REQUIRING LANE CLOSURE(S) EXCEPT AS PERMITTED BELOW.

- 1,300 VEH/HR/LANE: APPLIES TO NON-EVASIVE WORK WHERE WORKERS AND/OR EQUIPMENT ARE LOCATED 4 FT. OR MORE FROM TRAVEL (SPACE) LANE, OR AS APPROVED BY THE THRUWAY PROJECT ENGINEER. WORK SHOULD BE ABLE TO BE IMMEDIATELY STOPPED AND LANE CLOSURE(S) REMOVED IN THE EVENT QUEUES, GREATER THAN 1 MILE, DEVELOP.

NEW YORK STATE OF OPPORTUNITY. Thruway Authority

U.S. CUSTOMARY STANDARD SHEET

LANE CLOSURE CHARTS
1,300 VEHICLES PER HOUR
BUFFALO DIVISION
(SHEET 30 OF 37)

APPROVED SEPTEMBER 1, 2018

/S/ PATRICK THOMPSON, P.E.
DIRECTOR DESIGN SUPPORT SERVICES BUREAU

ISSUED UNDER DB 18-003

TA 619-37

NIAGARA: I-190 NORTHBOUND INTERCHANGES N14 TO N15 (1,300 VEH/HR/LANE)

LANES REQUIRED TO BE OPEN BY HOUR AND TIME OF DAY

SPRING SEASON MARCH 1 THRU MAY 20

HR/DAY	MON	TUES	WEDS	THUR	FRI	SAT	SUN
0	1	1	1	1	1	1	1
1	1	1	1	1	1	1	1
2	1	1	1	1	1	1	1
3	1	1	1	1	1	1	1
4	1	1	1	1	1	1	1
5	1	1	1	1	1	1	1
6	2	2	2	2	2	1	1
7	2	2	2	2	2	1	1
8	2	2	2	2	2	1	1
9	2	2	2	2	2	2	1
10	2	2	2	2	2	2	2
11	2	2	2	2	2	2	2
12	2	2	2	2	2	2	2
13	2	2	2	2	2	2	2
14	2	2	2	2	2	2	2
15	2	2	2	2	2	2	2
16	2	2	2	2	2	2	2
17	2	2	2	2	2	2	2
18	2	2	2	2	2	2	2
19	2	2	2	2	2	2	2
20	1	1	2	2	2	1	2
21	1	2	1	1	2	2	1
22	1	2	2	2	2	2	1
23	1	1	1	1	1	1	1

SUMMER SEASON MAY 21 THRU SEPTEMBER 15

HR/DAY	MON	TUES	WEDS	THUR	FRI	SAT	SUN
0	1	1	1	1	1	1	1
1	1	1	1	1	1	1	1
2	1	1	1	1	1	1	1
3	1	1	1	1	1	1	1
4	1	1	1	1	1	1	1
5	1	1	1	1	1	1	1
6	2	2	2	2	2	1	1
7	2	2	2	2	2	1	1
8	2	2	2	2	2	1	1
9	2	2	2	2	2	2	1
10	2	2	2	2	2	2	2
11	2	2	2	2	2	2	2
12	2	2	2	2	2	2	2
13	2	2	2	2	2	2	2
14	2	2	2	2	2	2	2
15	2	2	2	2	2	2	2
16	2	2	2	2	2	2	2
17	2	2	2	2	2	2	2
18	2	2	2	2	2	2	2
19	2	2	2	2	2	2	2
20	2	2	2	2	2	2	2
21	1	2	2	2	2	2	1
22	1	1	1	2	2	2	1
23	1	1	1	1	2	1	1

LANES REQUIRED TO BE OPEN BY HOUR AND TIME OF DAY

FALL SEASON SEPTEMBER 16 THRU November 30

HR/DAY	MON	TUES	WEDS	THUR	FRI	SAT	SUN
0	1	1	1	1	1	1	1
1	1	1	1	1	1	1	1
2	1	1	1	1	1	1	1
3	1	1	1	1	1	1	1
4	1	1	1	1	1	1	1
5	1	1	1	1	1	1	1
6	2	2	2	2	2	1	1
7	2	2	2	2	2	1	1
8	2	2	2	2	2	1	1
9	2	2	2	2	2	2	1
10	2	2	2	2	2	2	1
11	2	2	2	2	2	2	2
12	2	2	2	2	2	2	2
13	2	2	2	2	2	2	2
14	2	2	2	2	2	2	2
15	2	2	2	2	2	2	2
16	2	2	2	2	2	2	2
17	2	2	2	2	2	2	2
18	2	2	2	2	2	2	2
19	2	2	2	2	2	2	2
20	1	2	2	2	2	1	1
21	1	2	2	2	2	2	1
22	1	2	2	2	2	2	1
23	1	1	1	1	1	1	1

WINTER SEAS. DECEMBER 1 THRU February 28

HR/DAY	MON	TUES	WEDS	THUR	FRI	SAT	SUN
0	1	1	1	1	1	1	1
1	1	1	1	1	1	1	1
2	1	1	1	1	1	1	1
3	1	1	1	1	1	1	1
4	1	1	1	1	1	1	1
5	1	1	1	1	1	1	1
6	2	2	2	2	2	1	1
7	2	2	2	2	2	1	1
8	2	2	2	2	2	1	1
9	2	2	2	2	2	1	1
10	2	2	2	2	2	2	1
11	2	2	2	2	2	2	1
12	2	2	2	2	2	2	2
13	2	2	2	2	2	2	2
14	2	2	2	2	2	2	2
15	2	2	2	2	2	2	2
16	2	2	2	2	2	2	2
17	2	2	2	2	2	2	2
18	2	2	2	2	2	2	2
19	2	2	2	2	2	1	1
20	1	1	2	2	1	1	1
21	1	2	1	2	2	2	1
22	1	2	2	2	2	2	1
23	1	1	1	1	1	1	1

NIAGARA: I-190 SOUTHBOUND INTERCHANGES N15 TO N14 (1,300 VEH/HR/LANE)

LANES REQUIRED TO BE OPEN BY HOUR AND TIME OF DAY

SPRING SEASON MARCH 1 THRU MAY 20

HR/DAY	MON	TUES	WEDS	THUR	FRI	SAT	SUN
0	1	1	1	1	1	1	1
1	1	1	1	1	1	1	1
2	1	1	1	1	1	1	1
3	1	1	1	1	1	1	1
4	1	1	1	1	1	1	1
5	1	1	1	1	1	1	1
6	2	2	2	2	2	1	1
7	2	2	2	2	2	1	1
8	2	2	2	2	2	2	1
9	2	2	2	2	2	2	1
10	2	2	2	2	2	2	1
11	2	2	2	2	2	2	2
12	2	2	2	2	2	2	2
13	2	2	2	2	2	2	2
14	2	2	2	2	2	2	2
15	2	2	2	2	2	2	2
16	2	2	2	2	2	2	2
17	2	2	2	2	2	2	2
18	2	2	2	2	2	2	2
19	1	1	2	2	2	2	2
20	1	1	1	1	1	1	1
21	1	1	1	1	1	1	1
22	1	1	1	1	1	1	1
23	1	1	1	1	1	1	1

SUMMER SEASON MAY 21 THRU SEPTEMBER 15

HR/DAY	MON	TUES	WEDS	THUR	FRI	SAT	SUN
0	1	1	1	1	1	1	1
1	1	1	1	1	1	1	1
2	1	1	1	1	1	1	1
3	1	1	1	1	1	1	1
4	1	1	1	1	1	1	1
5	1	1	1	1	1	1	1
6	2	2	2	2	2	1	1
7	2	2	2	2	2	1	1
8	2	2	2	2	2	1	1
9	2	2	2	2	2	2	1
10	2	2	2	2	2	2	2
11	2	2	2	2	2	2	2
12	2	2	2	2	2	2	2
13	2	2	2	2	2	2	2
14	2	2	2	2	2	2	2
15	2	2	2	2	2	2	2
16	2	2	2	2	2	2	2
17	2	2	2	2	2	2	2
18	2	2	2	2	2	2	2
19	2	2	2	2	2	2	2
20	1	1	2	2	2	2	2
21	1	1	1	1	1	2	1
22	1	1	1	1	1	1	1
23	1	1	1	1	1	1	1

LANES REQUIRED TO BE OPEN BY HOUR AND TIME OF DAY

FALL SEASON SEPTEMBER 16 THRU November 30

HR/DAY	MON	TUES	WEDS	THUR	FRI	SAT	SUN
0	1	1	1	1	1	1	1
1	1	1	1	1	1	1	1
2	1	1	1	1	1	1	1
3	1	1	1	1	1	1	1
4	1	1	1	1	1	1	1
5	1	1	1	1	1	1	1
6	2	2	2	2	2	1	1
7	2	2	2	2	2	1	1
8	2	2	2	2	2	1	1
9	2	2	2	2	2	2	2
10	2	2	2	2	2	2	2
11	2	2	2	2	2	2	2
12	2	2	2	2	2	2	2
13	2	2	2	2	2	2	2
14	2	2	2	2	2	2	2
15	2	2	2	2	2	2	2
16	2	2	2	2	2	2	2
17	2	2	2	2	2	2	2
18	2	2	2	2	2	2	2
19	1	2	2	2	2	2	1
20	1	1	1	1	1	1	1
21	1	1	1	1	1	1	1
22	1	1	1	1	1	1	1
23	1	1	1	1	1	1	1

WINTER SEAS. DECEMBER 1 THRU February 28

HR/DAY	MON	TUES	WEDS	THUR	FRI	SAT	SUN
0	1	1	1	1	1	1	1
1	1	1	1	1	1	1	1
2	1	1	1	1	1	1	1
3	1	1	1	1	1	1	1
4	1	1	1	1	1	1	1
5	1	1	1	1	1	1	1
6	2	2	2	2	2	1	1
7	2	2	2	2	2	1	1
8	2	2	2	2	2	1	1
9	2	2	2	2	2	1	1
10	2	2	2	2	2	1	1
11	2	2	2	2	2	2	2
12	2	2	2	2	2	2	2
13	2	2	2	2	2	2	2
14	2	2	2	2	2	2	2
15	2	2	2	2	2	2	2
16	2	2	2	2	2	2	2
17	2	2	2	2	2	2	1
18	2	2	2	2	2	2	1
19	1	1	1	1	2	2	1
20	1	1	1	1	1	1	1
21	1	1	1	1	1	1	1
22	1	1	1	1	1	1	1
23	1	1	1	1	1	1	1

NOTES:

1) THE NEW YORK STATE THRUWAY IS A LIMITED ACCESS, HIGH-SPEED, HIGH-VOLUME HIGHWAY. TRAFFIC SHALL BE MAINTAINED IN ACCORDANCE WITH THE *MANUAL ON UNIFORM TRAFFIC CONTROL DEVICES (MUTCD)*, THE *WORK ZONE TRAFFIC CONTROL PLANS*, AND THE *STANDARD SPECIFICATIONS* SECTION 619 AS AMENDED BY THE AUTHORITY.

2) LANE CLOSURES ON THE THRUWAY SHALL ONLY BE ALLOWED IN ACCORDANCE WITH THESE TRAFFIC MANAGEMENT TABLE(S), UNLESS INDICATED OTHERWISE IN THE CONTRACT PLANS OR PROPOSAL DOCUMENTS.

3) LANE CLOSURE CHARTS SHALL APPLY AS FOLLOWS:

- 1,150 VEH/HR/LANE: APPLIES TO ALL WORK REQUIRING LANE CLOSURE(S) EXCEPT AS PERMITTED BELOW.

- 1,300 VEH/HR/LANE: APPLIES TO NON-EVASIVE WORK WHERE WORKERS AND/OR EQUIPMENT ARE LOCATED 4 FT. OR MORE FROM TRAVEL (SPACE) LANE, OR AS APPROVED BY THE THRUWAY PROJECT ENGINEER. WORK SHOULD BE ABLE TO BE IMMEDIATELY STOPPED AND LANE CLOSURE(S) REMOVED IN THE EVENT QUEUES, GREATER THAN 1 MILE, DEVELOP.

NEW YORK STATE OF OPPORTUNITY. Thruway Authority

U.S. CUSTOMARY STANDARD SHEET

LANE CLOSURE CHARTS
1,300 VEHICLES PER HOUR
BUFFALO DIVISION
(SHEET 31 OF 37)

APPROVED SEPTEMBER 1, 2018

/S/ PATRICK THOMPSON, P.E.
DIRECTOR DESIGN SUPPORT SERVICES BUREAU

ISSUED UNDER DB 18-003

TA 619-37

NIAGARA: I-190 NORTHBOUND INTERCHANGES N15 TO N16 (1,300 VEH/HR/LANE)

LANES REQUIRED TO BE OPEN BY HOUR AND TIME OF DAY

SPRING SEASON MARCH 1 THRU MAY 20

HR/DAY	MON	TUES	WEDS	THUR	FRI	SAT	SUN
0	1	1	1	1	1	1	1
1	1	1	1	1	1	1	1
2	1	1	1	1	1	1	1
3	1	1	1	1	1	1	1
4	1	1	1	1	1	1	1
5	1	1	1	1	1	1	1
6	2	2	2	2	2	1	1
7	2	2	2	2	2	1	1
8	2	2	2	2	2	1	1
9	2	2	2	2	2	1	1
10	2	2	2	2	2	2	1
11	2	2	2	2	2	2	2
12	2	2	2	2	2	2	2
13	2	2	2	2	2	2	2
14	2	2	2	2	2	2	2
15	2	2	2	2	2	2	2
16	2	2	2	2	2	2	2
17	2	2	2	2	2	2	2
18	2	2	2	2	2	2	1
19	2	2	2	2	2	2	1
20	1	1	2	1	2	1	1
21	1	1	1	1	2	2	1
22	1	1	1	1	2	2	1
23	1	1	1	1	1	1	1

SUMMER SEASON MAY 21 THRU SEPTEMBER 15

HR/DAY	MON	TUES	WEDS	THUR	FRI	SAT	SUN
0	1	1	1	1	1	1	1
1	1	1	1	1	1	1	1
2	1	1	1	1	1	1	1
3	1	1	1	1	1	1	1
4	1	1	1	1	1	1	1
5	1	1	1	1	1	1	1
6	2	2	2	2	2	1	1
7	2	2	2	2	2	1	1
8	2	2	2	2	2	1	1
9	2	2	2	2	2	1	1
10	2	2	2	2	2	2	1
11	2	2	2	2	2	2	2
12	2	2	2	2	2	2	2
13	2	2	2	2	2	2	2
14	2	2	2	2	2	2	2
15	2	2	2	2	2	2	2
16	2	2	2	2	2	2	2
17	2	2	2	2	2	2	2
18	2	2	2	2	2	2	2
19	2	2	2	2	2	2	2
20	1	2	2	2	2	2	1
21	1	1	1	2	2	2	1
22	1	1	1	1	2	2	1
23	1	1	1	1	2	1	1

LANES REQUIRED TO BE OPEN BY HOUR AND TIME OF DAY

FALL SEASON SEPTEMBER 16 THRU November 30

HR/DAY	MON	TUES	WEDS	THUR	FRI	SAT	SUN
0	1	1	1	1	1	1	1
1	1	1	1	1	1	1	1
2	1	1	1	1	1	1	1
3	1	1	1	1	1	1	1
4	1	1	1	1	1	1	1
5	1	1	1	1	1	1	1
6	2	2	2	2	2	1	1
7	2	2	2	2	2	1	1
8	2	2	2	2	2	1	1
9	2	2	2	2	2	1	1
10	2	2	2	2	2	2	1
11	2	2	2	2	2	2	2
12	2	2	2	2	2	2	2
13	2	2	2	2	2	2	2
14	2	2	2	2	2	2	2
15	2	2	2	2	2	2	2
16	2	2	2	2	2	2	2
17	2	2	2	2	2	2	2
18	2	2	2	2	2	2	2
19	2	2	2	2	2	2	1
20	1	1	2	2	1	1	1
21	1	1	1	1	1	1	1
22	1	1	1	1	2	2	1
23	1	1	1	1	1	1	1

WINTER SEAS. DECEMBER 1 THRU February 28

HR/DAY	MON	TUES	WEDS	THUR	FRI	SAT	SUN
0	1	1	1	1	1	1	1
1	1	1	1	1	1	1	1
2	1	1	1	1	1	1	1
3	1	1	1	1	1	1	1
4	1	1	1	1	1	1	1
5	1	1	1	1	1	1	1
6	2	2	2	2	2	1	1
7	2	2	2	2	2	1	1
8	2	2	2	2	2	1	1
9	2	2	2	2	2	1	1
10	2	2	2	2	2	1	1
11	2	2	2	2	2	2	1
12	2	2	2	2	2	2	2
13	2	2	2	2	2	2	2
14	2	2	2	2	2	2	2
15	2	2	2	2	2	2	2
16	2	2	2	2	2	2	2
17	2	2	2	2	2	2	2
18	2	2	2	2	2	2	2
19	2	2	2	2	2	1	1
20	1	1	1	1	1	1	1
21	1	1	1	1	1	1	1
22	1	2	1	1	2	2	1
23	1	1	1	1	1	1	1

NIAGARA: I-190 SOUTHBOUND INTERCHANGES N16 TO N15 (1,300 VEH/HR/LANE)

LANES REQUIRED TO BE OPEN BY HOUR AND TIME OF DAY

SPRING SEASON MARCH 1 THRU MAY 20

HR/DAY	MON	TUES	WEDS	THUR	FRI	SAT	SUN
0	1	1	1	1	1	1	1
1	1	1	1	1	1	1	1
2	1	1	1	1	1	1	1
3	1	1	1	1	1	1	1
4	1	1	1	1	1	1	1
5	1	1	1	1	1	1	1
6	2	2	2	2	2	1	1
7	2	2	2	2	2	1	1
8	2	2	2	2	2	1	1
9	2	2	2	2	2	2	1
10	2	2	2	2	2	2	2
11	2	2	2	2	2	2	2
12	2	2	2	2	2	2	2
13	2	2	2	2	2	2	2
14	2	2	2	2	2	2	2
15	2	2	2	2	2	2	2
16	2	2	2	2	2	2	2
17	2	2	2	2	2	2	2
18	2	2	2	2	2	2	2
19	1	2	2	2	2	2	2
20	1	1	1	2	2	1	1
21	1	1	1	1	1	1	1
22	1	1	1	1	1	1	1
23	1	1	1	1	1	1	1

SUMMER SEASON MAY 21 THRU SEPTEMBER 15

HR/DAY	MON	TUES	WEDS	THUR	FRI	SAT	SUN
0	1	1	1	1	1	1	1
1	1	1	1	1	1	1	1
2	1	1	1	1	1	1	1
3	1	1	1	1	1	1	1
4	1	1	1	1	1	1	1
5	1	1	1	1	1	1	1
6	2	2	2	2	2	1	1
7	2	2	2	2	2	1	1
8	2	2	2	2	2	1	1
9	2	2	2	2	2	2	1
10	2	2	2	2	2	2	2
11	2	2	2	2	2	2	2
12	2	2	2	2	2	2	2
13	2	2	2	2	2	2	2
14	2	2	2	2	2	2	2
15	2	2	2	2	2	2	2
16	2	2	2	2	2	2	2
17	2	2	2	2	2	2	2
18	2	2	2	2	2	2	2
19	2	2	2	2	2	2	2
20	1	2	2	2	2	2	2
21	1	1	1	1	2	2	1
22	1	2	2	1	1	2	1
23	1	1	1	1	1	1	1

LANES REQUIRED TO BE OPEN BY HOUR AND TIME OF DAY

FALL SEASON SEPTEMBER 16 THRU November 30

HR/DAY	MON	TUES	WEDS	THUR	FRI	SAT	SUN
0	1	1	1	1	1	1	1
1	1	1	1	1	1	1	1
2	1	1	1	1	1	1	1
3	1	1	1	1	1	1	1
4	1	1	1	1	1	1	1
5	1	1	1	1	1	1	1
6	2	2	2	2	2	1	1
7	2	2	2	2	2	1	1
8	2	2	2	2	2	1	1
9	2	2	2	2	2	2	2
10	2	2	2	2	2	2	2
11	2	2	2	2	2	2	2
12	2	2	2	2	2	2	2
13	2	2	2	2	2	2	2
14	2	2	2	2	2	2	2
15	2	2	2	2	2	2	2
16	2	2	2	2	2	2	2
17	2	2	2	2	2	2	2
18	2	2	2	2	2	2	2
19	1	2	2	2	2	2	1
20	1	1	1	1	1	1	1
21	1	1	1	1	1	1	1
22	1	1	1	1	1	1	1
23	1	1	1	1	1	1	1

WINTER SEAS. DECEMBER 1 THRU February 28

HR/DAY	MON	TUES	WEDS	THUR	FRI	SAT	SUN
0	1	1	1	1	1	1	1
1	1	1	1	1	1	1	1
2	1	1	1	1	1	1	1
3	1	1	1	1	1	1	1
4	1	1	1	1	1	1	1
5	1	1	1	1	1	1	1
6	2	2	2	2	2	1	1
7	2	2	2	2	2	1	1
8	2	2	2	2	2	1	1
9	2	2	2	2	2	1	1
10	2	2	2	2	2	2	1
11	2	2	2	2	2	2	2
12	2	2	2	2	2	2	2
13	2	2	2	2	2	2	2
14	2	2	2	2	2	2	2
15	2	2	2	2	2	2	2
16	2	2	2	2	2	2	2
17	2	2	2	2	2	2	2
18	2	2	2	2	2	2	2
19	1	1	1	1	2	1	1
20	1	1	1	1	1	1	1
21	1	1	1	1	1	1	1
22	1	1	1	1	1	1	1
23	1	1	1	1	1	1	1

NOTES:

1) THE NEW YORK STATE THRUWAY IS A LIMITED ACCESS, HIGH-SPEED, HIGH-VOLUME HIGHWAY. TRAFFIC SHALL BE MAINTAINED IN ACCORDANCE WITH THE *MANUAL ON UNIFORM TRAFFIC CONTROL DEVICES (MUTCD)*, THE *WORK ZONE TRAFFIC CONTROL PLANS*, AND THE *STANDARD SPECIFICATIONS* SECTION 619 AS AMENDED BY THE AUTHORITY.

2) LANE CLOSURES ON THE THRUWAY SHALL ONLY BE ALLOWED IN ACCORDANCE WITH THESE TRAFFIC MANAGEMENT TABLE(S), UNLESS INDICATED OTHERWISE IN THE CONTRACT PLANS OR PROPOSAL DOCUMENTS.

3) LANE CLOSURE CHARTS SHALL APPLY AS FOLLOWS:

- 1,150 VEH/HR/LANE: APPLIES TO ALL WORK REQUIRING LANE CLOSURE(S) EXCEPT AS PERMITTED BELOW.

- 1,300 VEH/HR/LANE: APPLIES TO NON-EVASIVE WORK WHERE WORKERS AND/OR EQUIPMENT ARE LOCATED 4 FT. OR MORE FROM TRAVEL (SPACE) LANE, OR AS APPROVED BY THE THRUWAY PROJECT ENGINEER. WORK SHOULD BE ABLE TO BE IMMEDIATELY STOPPED AND LANE CLOSURE(S) REMOVED IN THE EVENT QUEUES, GREATER THAN 1 MILE, DEVELOP.

NEW YORK STATE OF OPPORTUNITY. Thruway Authority

U.S. CUSTOMARY STANDARD SHEET

LANE CLOSURE CHARTS
1,300 VEHICLES PER HOUR
BUFFALO DIVISION
(SHEET 32 OF 37)

APPROVED SEPTEMBER 1, 2018

/S/ PATRICK THOMPSON, P.E.
DIRECTOR DESIGN SUPPORT SERVICES BUREAU

ISSUED UNDER DB 18-003

TA 619-37

NIAGARA: I-190 NORTHBOUND INTERCHANGES N16 TO N17 (1,300 VEH/HR/LANE)

LANES REQUIRED TO BE OPEN BY HOUR AND TIME OF DAY

SPRING SEASON MARCH 1 THRU MAY 20

HR/DAY	MON	TUES	WEDS	THUR	FRI	SAT	SUN
0	1	1	1	1	1	1	1
1	1	1	1	1	1	1	1
2	1	1	1	1	1	1	1
3	1	1	1	1	1	1	1
4	1	1	1	1	1	1	1
5	1	1	1	1	1	1	1
6	2	2	2	2	2	1	1
7	2	2	2	2	2	1	1
8	2	2	2	2	2	2	1
9	2	2	2	2	2	2	2
10	2	2	2	2	2	2	2
11	2	2	2	2	2	2	2
12	2	2	2	2	2	3	3
13	2	2	2	2	3	3	3
14	3	2	3	2	3	3	3
15	3	3	3	3	3	3	3
16	3	3	3	3	3	3	3
17	3	3	3	3	3	3	2
18	2	2	3	3	3	2	2
19	2	2	2	2	2	2	2
20	2	2	2	2	2	2	2
21	2	2	2	2	2	2	1
22	1	1	1	1	2	2	1
23	1	1	1	1	1	1	1

SUMMER SEASON MAY 21 THRU SEPTEMBER 15

HR/DAY	MON	TUES	WEDS	THUR	FRI	SAT	SUN
0	1	1	1	1	1	1	1
1	1	1	1	1	1	1	1
2	1	1	1	1	1	1	1
3	1	1	1	1	1	1	1
4	1	1	1	1	1	1	1
5	1	1	1	1	1	1	1
6	2	2	2	2	2	1	1
7	2	2	2	2	2	1	1
8	2	2	2	2	2	2	1
9	2	2	2	2	2	2	2
10	2	2	2	2	2	2	2
11	2	2	2	3	3	3	3
12	3	2	3	3	3	3	3
13	3	2	3	3	3	3	3
14	3	3	3	3	3	3	3
15	3	3	3	3	3	3	3
16	3	3	3	3	3	3	3
17	3	3	3	3	3	3	2
18	3	3	3	3	3	3	2
19	2	2	2	2	2	2	2
20	2	2	2	2	2	2	2
21	2	2	2	2	2	2	2
22	1	1	1	2	2	2	1
23	1	1	1	1	2	1	1

LANES REQUIRED TO BE OPEN BY HOUR AND TIME OF DAY

FALL SEASON SEPTEMBER 16 THRU November 30

HR/DAY	MON	TUES	WEDS	THUR	FRI	SAT	SUN
0	1	1	1	1	1	1	1
1	1	1	1	1	1	1	1
2	1	1	1	1	1	1	1
3	1	1	1	1	1	1	1
4	1	1	1	1	1	1	1
5	1	1	1	1	1	1	1
6	2	2	2	2	2	1	1
7	2	2	2	3	2	1	1
8	2	2	2	3	2	2	1
9	2	2	2	2	2	2	1
10	2	2	2	2	2	2	2
11	2	2	2	2	2	2	2
12	2	2	2	2	2	3	2
13	2	2	2	2	2	3	2
14	3	2	3	3	3	3	2
15	3	3	3	3	3	3	2
16	3	3	3	3	3	3	2
17	3	3	3	3	3	3	2
18	2	2	3	3	3	2	2
19	2	2	2	2	2	2	2
20	2	2	2	2	2	2	2
21	1	2	2	2	2	2	1
22	1	1	1	1	2	2	1
23	1	1	1	1	1	1	1

WINTER SEAS. DECEMBER 1 THRU February 28

HR/DAY	MON	TUES	WEDS	THUR	FRI	SAT	SUN
0	1	1	1	1	1	1	1
1	1	1	1	1	1	1	1
2	1	1	1	1	1	1	1
3	1	1	1	1	1	1	1
4	1	1	1	1	1	1	1
5	1	1	1	1	1	1	1
6	2	2	2	2	2	1	1
7	2	2	2	2	2	1	1
8	2	2	2	2	2	1	1
9	2	2	2	2	2	2	1
10	2	2	2	2	2	2	2
11	2	2	2	2	2	2	2
12	2	2	2	2	2	2	2
13	2	2	2	2	2	2	2
14	2	2	2	2	3	2	2
15	3	3	3	3	3	3	2
16	3	3	3	3	3	3	2
17	3	3	3	3	3	2	2
18	2	3	3	2	3	2	2
19	2	2	2	2	2	2	2
20	2	2	2	2	2	2	1
21	2	2	2	2	2	2	1
22	1	1	1	1	2	2	1
23	1	1	1	1	1	1	1

NIAGARA: I-190 SOUTHBOUND INTERCHANGES N17 TO N16 (1,300 VEH/HR/LANE)

LANES REQUIRED TO BE OPEN BY HOUR AND TIME OF DAY

SPRING SEASON MARCH 1 THRU MAY 20

HR/DAY	MON	TUES	WEDS	THUR	FRI	SAT	SUN
0	1	1	1	1	1	1	1
1	1	1	1	1	1	1	1
2	1	1	1	1	1	1	1
3	1	1	1	1	1	1	1
4	1	1	1	1	1	1	1
5	1	1	1	1	1	1	1
6	2	2	2	2	2	1	1
7	3	3	3	3	3	1	1
8	3	3	3	3	3	2	1
9	2	2	2	2	2	2	2
10	2	2	2	2	2	2	2
11	2	2	2	2	2	2	2
12	2	2	2	2	2	2	2
13	2	2	2	2	2	2	2
14	2	2	2	2	3	2	2
15	3	3	3	3	3	2	2
16	3	3	3	3	3	2	2
17	3	3	3	3	3	2	2
18	2	2	2	2	2	2	2
19	2	2	2	2	2	2	2
20	2	1	2	2	2	2	2
21	1	1	1	1	2	2	1
22	1	1	1	1	1	2	1
23	1	1	1	1	1	1	1

SUMMER SEASON MAY 21 THRU SEPTEMBER 15

HR/DAY	MON	TUES	WEDS	THUR	FRI	SAT	SUN
0	1	1	1	1	1	1	1
1	1	1	1	1	1	1	1
2	1	1	1	1	1	1	1
3	1	1	1	1	1	1	1
4	1	1	1	1	1	1	1
5	1	1	1	1	1	1	1
6	2	2	2	2	2	1	1
7	3	3	3	3	3	2	1
8	3	3	3	3	3	2	2
9	2	2	2	3	2	2	2
10	2	2	2	2	2	2	2
11	2	2	2	2	3	2	2
12	2	2	2	2	3	2	2
13	2	2	2	2	3	2	2
14	3	2	3	3	3	3	3
15	3	3	3	3	3	3	3
16	3	3	3	3	3	3	3
17	3	3	3	3	3	3	3
18	2	2	2	2	3	3	3
19	2	2	2	2	2	2	2
20	2	2	2	2	2	2	2
21	1	2	2	2	2	2	2
22	1	2	2	2	2	2	1
23	1	1	1	1	2	2	1

LANES REQUIRED TO BE OPEN BY HOUR AND TIME OF DAY

FALL SEASON SEPTEMBER 16 THRU November 30

HR/DAY	MON	TUES	WEDS	THUR	FRI	SAT	SUN
0	1	1	1	1	1	1	1
1	1	1	1	1	1	1	1
2	1	1	1	1	1	1	1
3	1	1	1	1	1	1	1
4	1	1	1	1	1	1	1
5	1	1	1	1	1	1	1
6	2	2	2	3	2	1	1
7	3	3	3	3	3	1	1
8	3	3	3	3	3	2	2
9	2	2	2	2	2	2	2
10	2	2	2	2	2	2	2
11	2	2	2	2	2	2	2
12	2	2	2	2	2	2	2
13	2	2	2	2	2	2	2
14	2	2	2	2	3	2	2
15	3	3	3	3	3	2	2
16	3	3	3	3	3	2	2
17	3	3	3	3	3	2	2
18	2	2	2	2	2	2	2
19	2	2	2	2	2	2	2
20	1	1	1	2	2	2	1
21	1	1	1	1	2	2	1
22	1	1	1	1	2	2	1
23	1	1	1	1	1	1	1

WINTER SEAS. DECEMBER 1 THRU February 28

HR/DAY	MON	TUES	WEDS	THUR	FRI	SAT	SUN
0	1	1	1	1	1	1	1
1	1	1	1	1	1	1	1
2	1	1	1	1	1	1	1
3	1	1	1	1	1	1	1
4	1	1	1	1	1	1	1
5	1	1	1	1	1	1	1
6	2	2	2	2	2	1	1
7	3	3	3	3	3	1	1
8	3	3	3	3	3	2	1
9	2	2	2	2	2	2	2
10	2	2	2	2	2	2	2
11	2	2	2	2	2	2	2
12	2	2	2	2	2	2	2
13	2	2	2	2	2	2	2
14	2	2	2	2	2	2	2
15	3	3	3	3	3	2	2
16	3	3	3	3	3	2	2
17	3	3	3	3	3	2	2
18	2	2	2	2	2	2	2
19	1	2	2	2	2	2	1
20	1	1	1	1	1	1	1
21	1	1	1	1	1	1	1
22	1	1	1	1	1	1	1
23	1	1	1	1	1	1	1

NOTES:

1) THE NEW YORK STATE THRUWAY IS A LIMITED ACCESS, HIGH-SPEED, HIGH-VOLUME HIGHWAY. TRAFFIC SHALL BE MAINTAINED IN ACCORDANCE WITH THE *MANUAL ON UNIFORM TRAFFIC CONTROL DEVICES (MUTCD)*, THE *WORK ZONE TRAFFIC CONTROL PLANS*, AND THE *STANDARD SPECIFICATIONS* SECTION 619 AS AMENDED BY THE AUTHORITY.

2) LANE CLOSURES ON THE THRUWAY SHALL ONLY BE ALLOWED IN ACCORDANCE WITH THESE TRAFFIC MANAGEMENT TABLE(S), UNLESS INDICATED OTHERWISE IN THE CONTRACT PLANS OR PROPOSAL DOCUMENTS.

3) LANE CLOSURE CHARTS SHALL APPLY AS FOLLOWS:

- 1,150 VEH/HR/LANE: APPLIES TO ALL WORK REQUIRING LANE CLOSURE(S) EXCEPT AS PERMITTED BELOW.

- 1,300 VEH/HR/LANE: APPLIES TO NON-EVASIVE WORK WHERE WORKERS AND/OR EQUIPMENT ARE LOCATED 4 FT. OR MORE FROM TRAVEL (SPACE) LANE, OR AS APPROVED BY THE THRUWAY PROJECT ENGINEER. WORK SHOULD BE ABLE TO BE IMMEDIATELY STOPPED AND LANE CLOSURE(S) REMOVED IN THE EVENT QUEUES, GREATER THAN 1 MILE, DEVELOP.

NEW YORK STATE OF OPPORTUNITY. Thruway Authority

U.S. CUSTOMARY STANDARD SHEET

LANE CLOSURE CHARTS
1,300 VEHICLES PER HOUR
BUFFALO DIVISION
(SHEET 33 OF 37)

APPROVED SEPTEMBER 1, 2018

/S/ PATRICK THOMPSON, P.E.
DIRECTOR DESIGN SUPPORT SERVICES BUREAU

ISSUED UNDER DB 18-003

TA 619-37

NIAGARA: I-190 NORTHBOUND INTERCHANGES N17 TO N18A (1,300 VEH/HR/LANE)

LANES REQUIRED TO BE OPEN BY HOUR AND TIME OF DAY

SPRING SEASON MARCH 1 THRU MAY 20

HR/DAY	MON	TUES	WEDS	THUR	FRI	SAT	SUN
0	1	1	1	1	1	1	1
1	1	1	1	1	1	1	1
2	1	1	1	1	1	1	1
3	1	1	1	1	1	1	1
4	1	1	1	1	1	1	1
5	1	1	1	1	1	1	1
6	2	2	2	2	2	1	1
7	2	2	2	2	2	1	1
8	2	2	2	2	2	2	1
9	2	2	2	2	2	2	2
10	2	2	2	2	2	2	2
11	2	2	2	2	2	2	2
12	2	2	2	2	2	2	2
13	2	2	2	2	2	2	2
14	2	2	2	2	2	2	2
15	2	2	2	2	2	2	2
16	2	2	2	2	2	2	2
17	2	2	2	2	2	2	2
18	2	2	2	2	2	2	2
19	2	2	2	2	2	2	2
20	2	2	2	2	2	2	2
21	2	2	2	2	2	2	1
22	1	1	1	1	2	2	1
23	1	1	1	1	1	1	1

SUMMER SEASON MAY 21 THRU SEPTEMBER 15

HR/DAY	MON	TUES	WEDS	THUR	FRI	SAT	SUN
0	1	1	1	1	1	1	1
1	1	1	1	1	1	1	1
2	1	1	1	1	1	1	1
3	1	1	1	1	1	1	1
4	1	1	1	1	1	1	1
5	1	1	1	1	1	1	1
6	2	2	2	2	2	1	1
7	2	2	2	2	2	1	1
8	2	2	2	2	2	2	1
9	2	2	2	2	2	2	2
10	2	2	2	2	2	2	2
11	2	2	2	2	2	2	2
12	2	2	2	2	2	2	2
13	2	2	2	2	2	2	2
14	2	2	2	2	2	2	2
15	2	2	2	2	2	2	2
16	2	2	2	2	2	2	2
17	2	2	2	2	2	2	2
18	2	2	2	2	2	2	2
19	2	2	2	2	2	2	2
20	2	2	2	2	2	2	2
21	2	2	2	2	2	2	2
22	1	1	1	2	2	2	1
23	1	1	1	1	2	1	1

LANES REQUIRED TO BE OPEN BY HOUR AND TIME OF DAY

FALL SEASON SEPTEMBER 16 THRU November 30

HR/DAY	MON	TUES	WEDS	THUR	FRI	SAT	SUN
0	1	1	1	1	1	1	1
1	1	1	1	1	1	1	1
2	1	1	1	1	1	1	1
3	1	1	1	1	1	1	1
4	1	1	1	1	1	1	1
5	1	1	1	1	1	1	1
6	2	2	2	2	2	1	1
7	2	2	2	2	2	1	1
8	2	2	2	2	2	2	1
9	2	2	2	2	2	2	1
10	2	2	2	2	2	2	2
11	2	2	2	2	2	2	2
12	2	2	2	2	2	2	2
13	2	2	2	2	2	2	2
14	2	2	2	2	2	2	2
15	2	2	2	2	2	2	2
16	2	2	2	2	2	2	2
17	2	2	2	2	2	2	2
18	2	2	2	2	2	2	2
19	2	2	2	2	2	2	2
20	2	2	2	2	2	2	2
21	1	2	2	2	2	2	1
22	1	1	1	1	2	2	1
23	1	1	1	1	1	1	1

WINTER SEAS. DECEMBER 1 THRU February 28

HR/DAY	MON	TUES	WEDS	THUR	FRI	SAT	SUN
0	1	1	1	1	1	1	1
1	1	1	1	1	1	1	1
2	1	1	1	1	1	1	1
3	1	1	1	1	1	1	1
4	1	1	1	1	1	1	1
5	1	1	1	1	1	1	1
6	1	2	2	2	1	1	1
7	2	2	2	2	2	1	1
8	2	2	2	2	2	1	1
9	2	2	2	2	2	1	1
10	2	2	2	2	2	2	2
11	2	2	2	2	2	2	2
12	2	2	2	2	2	2	2
13	2	2	2	2	2	2	2
14	2	2	2	2	2	2	2
15	2	2	2	2	2	2	2
16	2	2	2	2	2	2	2
17	2	2	2	2	2	2	2
18	2	2	2	2	2	2	2
19	2	2	2	2	2	2	2
20	2	2	2	2	2	2	1
21	1	2	2	2	2	2	1
22	1	1	1	1	2	2	1
23	1	1	1	1	1	1	1

NIAGARA: I-190 SOUTHBOUND INTERCHANGES N18A TO N17 (1,300 VEH/HR/LANE)

LANES REQUIRED TO BE OPEN BY HOUR AND TIME OF DAY

SPRING SEASON MARCH 1 THRU MAY 20

HR/DAY	MON	TUES	WEDS	THUR	FRI	SAT	SUN
0	1	1	1	1	1	1	1
1	1	1	1	1	1	1	1
2	1	1	1	1	1	1	1
3	1	1	1	1	1	1	1
4	1	1	1	1	1	1	1
5	1	1	1	1	1	1	1
6	2	2	2	2	2	1	1
7	2	2	2	2	2	1	1
8	2	2	2	2	2	2	1
9	2	2	2	2	2	2	2
10	2	2	2	2	2	2	2
11	2	2	2	2	2	2	2
12	2	2	2	2	2	2	2
13	2	2	2	2	2	2	2
14	2	2	2	2	2	2	2
15	2	2	2	2	2	2	2
16	2	2	2	2	2	2	2
17	2	2	2	2	2	2	2
18	2	2	2	2	2	2	2
19	2	2	2	2	2	2	2
20	2	1	2	2	2	2	2
21	1	1	1	1	2	2	1
22	1	1	1	1	1	2	1
23	1	1	1	1	1	1	1

SUMMER SEASON MAY 21 THRU SEPTEMBER 15

HR/DAY	MON	TUES	WEDS	THUR	FRI	SAT	SUN
0	1	1	1	1	1	1	1
1	1	1	1	1	1	1	1
2	1	1	1	1	1	1	1
3	1	1	1	1	1	1	1
4	1	1	1	1	1	1	1
5	1	1	1	1	1	1	1
6	2	2	2	2	2	1	1
7	2	2	2	2	2	2	1
8	2	2	2	2	2	2	2
9	2	2	2	2	2	2	2
10	2	2	2	2	2	2	2
11	2	2	2	2	2	2	2
12	2	2	2	2	2	2	2
13	2	2	2	2	2	2	2
14	2	2	2	2	2	2	2
15	2	2	2	2	2	2	2
16	2	2	2	2	2	2	2
17	2	2	2	2	2	2	2
18	2	2	2	2	2	2	2
19	2	2	2	2	2	2	2
20	2	2	2	2	2	2	2
21	1	2	2	2	2	2	2
22	1	2	2	2	2	2	1
23	1	1	1	1	2	2	1

LANES REQUIRED TO BE OPEN BY HOUR AND TIME OF DAY

FALL SEASON SEPTEMBER 16 THRU November 30

HR/DAY	MON	TUES	WEDS	THUR	FRI	SAT	SUN
0	1	1	1	1	1	1	1
1	1	1	1	1	1	1	1
2	1	1	1	1	1	1	1
3	1	1	1	1	1	1	1
4	1	1	1	1	1	1	1
5	1	1	1	1	1	1	1
6	2	2	2	2	2	1	1
7	2	2	2	2	2	1	1
8	2	2	2	2	2	2	2
9	2	2	2	2	2	2	2
10	2	2	2	2	2	2	2
11	2	2	2	2	2	2	2
12	2	2	2	2	2	2	2
13	2	2	2	2	2	2	2
14	2	2	2	2	2	2	2
15	2	2	2	2	2	2	2
16	2	2	2	2	2	2	2
17	2	2	2	2	2	2	2
18	2	2	2	2	2	2	2
19	2	2	2	2	2	2	2
20	1	1	1	2	2	2	1
21	1	1	1	1	2	2	1
22	1	1	1	1	1	2	1
23	1	1	1	1	1	1	1

WINTER SEAS. DECEMBER 1 THRU February 28

HR/DAY	MON	TUES	WEDS	THUR	FRI	SAT	SUN
0	1	1	1	1	1	1	1
1	1	1	1	1	1	1	1
2	1	1	1	1	1	1	1
3	1	1	1	1	1	1	1
4	1	1	1	1	1	1	1
5	1	1	1	1	1	1	1
6	2	2	2	2	2	1	1
7	2	2	2	2	2	1	1
8	2	2	2	2	2	2	1
9	2	2	2	2	2	2	2
10	2	2	2	2	2	2	2
11	2	2	2	2	2	2	2
12	2	2	2	2	2	2	2
13	2	2	2	2	2	2	2
14	2	2	2	2	2	2	2
15	2	2	2	2	2	2	2
16	2	2	2	2	2	2	2
17	2	2	2	2	2	2	2
18	2	2	2	2	2	2	2
19	1	2	2	2	2	2	1
20	1	1	1	1	1	1	1
21	1	1	1	1	1	1	1
22	1	1	1	1	1	1	1
23	1	1	1	1	1	1	1

NOTES:

1) THE NEW YORK STATE THRUWAY IS A LIMITED ACCESS, HIGH-SPEED, HIGH-VOLUME HIGHWAY. TRAFFIC SHALL BE MAINTAINED IN ACCORDANCE WITH THE *MANUAL ON UNIFORM TRAFFIC CONTROL DEVICES (MUTCD)*, THE *WORK ZONE TRAFFIC CONTROL PLANS*, AND THE *STANDARD SPECIFICATIONS* SECTION 619 AS AMENDED BY THE AUTHORITY.

2) LANE CLOSURES ON THE THRUWAY SHALL ONLY BE ALLOWED IN ACCORDANCE WITH THESE TRAFFIC MANAGEMENT TABLE(S), UNLESS INDICATED OTHERWISE IN THE CONTRACT PLANS OR PROPOSAL DOCUMENTS.

3) LANE CLOSURE CHARTS SHALL APPLY AS FOLLOWS:

- 1,150 VEH/HR/LANE: APPLIES TO ALL WORK REQUIRING LANE CLOSURE(S) EXCEPT AS PERMITTED BELOW.

- 1,300 VEH/HR/LANE: APPLIES TO NON-EVASIVE WORK WHERE WORKERS AND/OR EQUIPMENT ARE LOCATED 4 FT. OR MORE FROM TRAVEL (SPACE) LANE, OR AS APPROVED BY THE THRUWAY PROJECT ENGINEER. WORK SHOULD BE ABLE TO BE IMMEDIATELY STOPPED AND LANE CLOSURE(S) REMOVED IN THE EVENT QUEUES, GREATER THAN 1 MILE, DEVELOP.

NEW YORK STATE OF OPPORTUNITY. Thruway Authority

U.S. CUSTOMARY STANDARD SHEET

LANE CLOSURE CHARTS
1,300 VEHICLES PER HOUR
BUFFALO DIVISION
(SHEET 34 OF 37)

APPROVED SEPTEMBER 1, 2018

/S/ PATRICK THOMPSON, P.E.
DIRECTOR DESIGN SUPPORT SERVICES BUREAU

ISSUED UNDER DB 18-003

TA 619-37

NIAGARA: I-190 NORTHBOUND INTERCHANGES N18B TO N19 (1,300 VEH/HR/LANE)

LANES REQUIRED TO BE OPEN BY HOUR AND TIME OF DAY

SPRING SEASON MARCH 1 THRU MAY 20

HR/DAY	MON	TUES	WEDS	THUR	FRI	SAT	SUN
0	1	1	1	1	1	1	1
1	1	1	1	1	1	1	1
2	1	1	1	1	1	1	1
3	1	1	1	1	1	1	1
4	1	1	1	1	1	1	1
5	1	1	1	1	1	1	1
6	1	1	1	1	1	1	1
7	2	2	2	2	2	1	1
8	2	2	2	2	2	1	1
9	2	2	2	2	2	1	1
10	2	2	2	2	2	2	2
11	2	2	2	2	2	2	2
12	2	2	2	2	2	2	2
13	2	2	2	2	2	2	2
14	2	2	2	2	2	2	2
15	2	2	2	2	2	2	2
16	2	2	2	2	2	2	2
17	2	2	2	2	2	2	2
18	2	2	2	2	2	2	2
19	2	1	2	2	2	2	2
20	1	1	1	1	2	1	1
21	1	1	1	1	1	1	1
22	1	1	1	1	1	1	1
23	1	1	1	1	1	1	1

SUMMER SEASON MAY 21 THRU SEPTEMBER 15

HR/DAY	MON	TUES	WEDS	THUR	FRI	SAT	SUN
0	1	1	1	1	1	1	1
1	1	1	1	1	1	1	1
2	1	1	1	1	1	1	1
3	1	1	1	1	1	1	1
4	1	1	1	1	1	1	1
5	1	1	1	1	1	1	1
6	2	1	1	1	1	1	1
7	2	2	2	2	2	1	1
8	2	2	2	2	2	1	1
9	2	2	2	2	2	2	1
10	2	2	2	2	2	2	2
11	2	2	2	2	2	2	2
12	2	2	2	2	2	2	2
13	2	2	2	2	2	2	2
14	2	2	2	2	2	2	2
15	2	2	2	2	2	2	2
16	2	2	2	2	2	2	2
17	2	2	2	2	2	2	2
18	2	2	2	2	2	2	2
19	2	2	2	2	2	2	2
20	2	1	1	2	2	2	2
21	1	1	1	1	2	2	1
22	1	1	1	1	1	1	1
23	1	1	1	1	1	1	1

LANES REQUIRED TO BE OPEN BY HOUR AND TIME OF DAY

FALL SEASON SEPTEMBER 16 THRU November 30

HR/DAY	MON	TUES	WEDS	THUR	FRI	SAT	SUN
0	1	1	1	1	1	1	1
1	1	1	1	1	1	1	1
2	1	1	1	1	1	1	1
3	1	1	1	1	1	1	1
4	1	1	1	1	1	1	1
5	1	1	1	1	1	1	1
6	1	1	1	2	1	1	1
7	2	2	2	2	2	1	1
8	2	2	2	2	2	1	1
9	2	2	2	2	2	1	1
10	2	2	2	2	2	2	2
11	2	2	2	2	2	2	2
12	2	2	2	2	2	2	2
13	2	2	2	2	2	2	2
14	2	2	2	2	2	2	2
15	2	2	2	2	2	2	2
16	2	2	2	2	2	2	2
17	2	2	2	2	2	2	2
18	2	2	2	2	2	2	2
19	2	2	2	2	2	2	2
20	1	1	1	1	2	1	1
21	1	1	1	1	1	1	1
22	1	1	1	1	1	1	1
23	1	1	1	1	1	1	1

WINTER SEAS. DECEMBER 1 THRU February 28

HR/DAY	MON	TUES	WEDS	THUR	FRI	SAT	SUN
0	1	1	1	1	1	1	1
1	1	1	1	1	1	1	1
2	1	1	1	1	1	1	1
3	1	1	1	1	1	1	1
4	1	1	1	1	1	1	1
5	1	1	1	1	1	1	1
6	1	1	1	1	1	1	1
7	2	2	2	2	2	1	1
8	2	2	2	2	2	1	1
9	2	2	2	2	2	1	1
10	2	2	1	1	2	1	1
11	2	2	2	2	2	2	2
12	2	2	2	2	2	2	2
13	2	2	2	2	2	2	2
14	2	2	2	2	2	2	2
15	2	2	2	2	2	2	2
16	2	2	2	2	2	2	2
17	2	2	2	2	2	2	2
18	2	2	2	2	2	2	2
19	1	1	1	1	2	2	1
20	1	1	1	1	1	1	1
21	1	1	1	1	1	1	1
22	1	1	1	1	1	1	1
23	1	1	1	1	1	1	1

NIAGARA: I-190 SOUTHBOUND INTERCHANGES N19 TO N18B (1,300 VEH/HR/LANE)

LANES REQUIRED TO BE OPEN BY HOUR AND TIME OF DAY

SPRING SEASON MARCH 1 THRU MAY 20

HR/DAY	MON	TUES	WEDS	THUR	FRI	SAT	SUN
0	1	1	1	1	1	1	1
1	1	1	1	1	1	1	1
2	1	1	1	1	1	1	1
3	1	1	1	1	1	1	1
4	1	1	1	1	1	1	1
5	1	1	1	1	1	1	1
6	2	2	2	2	2	1	1
7	2	2	2	2	2	1	1
8	2	2	2	2	2	1	1
9	2	2	2	2	2	2	1
10	2	2	2	2	2	2	2
11	2	2	2	2	2	2	2
12	2	2	2	2	2	2	2
13	2	2	2	2	2	2	2
14	2	2	2	2	2	2	2
15	2	2	2	2	2	2	2
16	2	2	2	2	2	2	2
17	2	2	2	2	2	2	2
18	2	2	2	2	2	2	2
19	1	1	1	1	2	2	2
20	1	1	1	1	1	1	2
21	1	1	1	1	1	1	1
22	1	1	1	1	1	1	1
23	1	1	1	1	1	1	1

SUMMER SEASON MAY 21 THRU SEPTEMBER 15

HR/DAY	MON	TUES	WEDS	THUR	FRI	SAT	SUN
0	1	1	1	1	1	1	1
1	1	1	1	1	1	1	1
2	1	1	1	1	1	1	1
3	1	1	1	1	1	1	1
4	1	1	1	1	1	1	1
5	1	1	1	1	1	1	1
6	2	2	2	2	2	1	1
7	2	2	2	2	2	1	1
8	2	2	2	2	2	1	1
9	2	2	2	2	2	2	2
10	2	2	2	2	2	2	2
11	2	2	2	2	2	2	2
12	2	2	2	2	2	2	2
13	2	2	2	2	2	2	2
14	2	2	2	2	2	2	2
15	2	2	2	2	2	2	2
16	2	2	2	2	2	2	2
17	2	2	2	2	2	2	2
18	2	2	2	2	2	2	2
19	2	1	2	2	2	2	2
20	1	2	2	2	2	2	2
21	1	2	1	2	2	2	2
22	1	2	2	1	2	2	1
23	1	1	1	1	2	2	1

LANES REQUIRED TO BE OPEN BY HOUR AND TIME OF DAY

FALL SEASON SEPTEMBER 16 THRU November 30

HR/DAY	MON	TUES	WEDS	THUR	FRI	SAT	SUN
0	1	1	1	1	1	1	1
1	1	1	1	1	1	1	1
2	1	1	1	1	1	1	1
3	1	1	1	1	1	1	1
4	1	1	1	1	1	1	1
5	1	1	1	1	1	1	1
6	2	2	2	2	2	1	1
7	2	2	2	2	2	1	1
8	2	2	2	2	2	1	1
9	2	2	2	2	2	2	2
10	2	2	2	2	2	2	2
11	2	2	2	2	2	2	2
12	2	2	2	2	2	2	2
13	2	2	2	2	2	2	2
14	2	2	2	2	2	2	2
15	2	2	2	2	2	2	2
16	2	2	2	2	2	2	2
17	2	2	2	2	2	2	2
18	2	2	2	2	2	2	2
19	1	1	1	2	2	2	1
20	1	1	1	1	1	1	1
21	1	1	1	1	1	1	1
22	1	1	1	1	1	1	1
23	1	1	1	1	1	1	1

WINTER SEAS. DECEMBER 1 THRU February 28

HR/DAY	MON	TUES	WEDS	THUR	FRI	SAT	SUN
0	1	1	1	1	1	1	1
1	1	1	1	1	1	1	1
2	1	1	1	1	1	1	1
3	1	1	1	1	1	1	1
4	1	1	1	1	1	1	1
5	1	1	1	1	1	1	1
6	2	2	2	2	2	1	1
7	2	2	2	2	2	1	1
8	2	2	2	2	2	1	1
9	2	2	2	2	2	1	1
10	2	2	2	2	2	2	2
11	2	2	2	2	2	2	2
12	2	2	2	2	2	2	2
13	2	2	2	2	2	2	2
14	2	2	2	2	2	2	2
15	2	2	2	2	2	2	2
16	2	2	2	2	2	2	2
17	2	2	2	2	2	2	2
18	2	2	2	2	2	2	2
19	1	1	1	1	1	1	1
20	1	1	1	1	1	1	1
21	1	1	1	1	1	1	1
22	1	1	1	1	1	1	1
23	1	1	1	1	1	1	1

NOTES:

1) THE NEW YORK STATE THRUWAY IS A LIMITED ACCESS, HIGH-SPEED, HIGH-VOLUME HIGHWAY. TRAFFIC SHALL BE MAINTAINED IN ACCORDANCE WITH THE *MANUAL ON UNIFORM TRAFFIC CONTROL DEVICES (MUTCD)*, THE *WORK ZONE TRAFFIC CONTROL PLANS*, AND THE *STANDARD SPECIFICATIONS* SECTION 619 AS AMENDED BY THE AUTHORITY.

2) LANE CLOSURES ON THE THRUWAY SHALL ONLY BE ALLOWED IN ACCORDANCE WITH THESE TRAFFIC MANAGEMENT TABLE(S), UNLESS INDICATED OTHERWISE IN THE CONTRACT PLANS OR PROPOSAL DOCUMENTS.

3) LANE CLOSURE CHARTS SHALL APPLY AS FOLLOWS:

- 1,150 VEH/HR/LANE: APPLIES TO ALL WORK REQUIRING LANE CLOSURE(S) EXCEPT AS PERMITTED BELOW.

- 1,300 VEH/HR/LANE: APPLIES TO NON-EVASIVE WORK WHERE WORKERS AND/OR EQUIPMENT ARE LOCATED 4 FT. OR MORE FROM TRAVEL (SPACE) LANE, OR AS APPROVED BY THE THRUWAY PROJECT ENGINEER. WORK SHOULD BE ABLE TO BE IMMEDIATELY STOPPED AND LANE CLOSURE(S) REMOVED IN THE EVENT QUEUES, GREATER THAN 1 MILE, DEVELOP.

NEW YORK STATE OF OPPORTUNITY. Thruway Authority

U.S. CUSTOMARY STANDARD SHEET

LANE CLOSURE CHARTS
1,300 VEHICLES PER HOUR
BUFFALO DIVISION
(SHEET 35 OF 37)

APPROVED SEPTEMBER 1, 2018

/S/ PATRICK THOMPSON, P.E.
DIRECTOR DESIGN SUPPORT SERVICES BUREAU

ISSUED UNDER DB 18-003

TA 619-37

NIAGARA: I-190 NORTHBOUND INTERCHANGES N19 TO N20 (1,300 VEH/HR/LANE)

LANES REQUIRED TO BE OPEN BY HOUR AND TIME OF DAY

SPRING SEASON MARCH 1 THRU MAY 20

HR/DAY	MON	TUES	WEDS	THUR	FRI	SAT	SUN
0	1	1	1	1	1	1	1
1	1	1	1	1	1	1	1
2	1	1	1	1	1	1	1
3	1	1	1	1	1	1	1
4	1	1	1	1	1	1	1
5	1	1	1	1	1	1	1
6	1	1	1	1	1	1	1
7	2	2	2	2	2	1	1
8	2	2	2	2	2	1	1
9	2	2	2	2	2	1	1
10	2	2	2	2	2	2	2
11	2	2	2	2	2	2	2
12	2	2	2	2	2	2	2
13	2	2	2	2	2	2	2
14	2	2	2	2	2	2	2
15	2	2	2	2	2	2	2
16	2	2	2	2	2	2	2
17	2	2	2	2	2	2	2
18	2	2	2	2	2	2	2
19	2	1	2	2	2	2	2
20	1	1	1	1	2	2	1
21	1	1	1	1	1	1	1
22	1	1	1	1	1	1	1
23	1	1	1	1	1	1	1

SUMMER SEASON MAY 21 THRU SEPTEMBER 15

HR/DAY	MON	TUES	WEDS	THUR	FRI	SAT	SUN
0	1	1	1	1	1	1	1
1	1	1	1	1	1	1	1
2	1	1	1	1	1	1	1
3	1	1	1	1	1	1	1
4	1	1	1	1	1	1	1
5	1	1	1	1	1	1	1
6	2	1	2	1	1	1	1
7	2	2	2	2	2	1	1
8	2	2	2	2	2	1	1
9	2	2	2	2	2	2	2
10	2	2	2	2	2	2	2
11	2	2	2	2	2	2	2
12	2	2	2	2	2	2	2
13	2	2	2	2	2	2	2
14	2	2	2	2	2	2	2
15	2	2	2	2	2	2	2
16	2	2	2	2	2	2	2
17	2	2	2	2	2	2	2
18	2	2	2	2	2	2	2
19	2	2	2	2	2	2	2
20	2	1	1	2	2	2	2
21	1	1	1	1	2	2	1
22	1	1	1	1	1	1	1
23	1	1	1	1	1	1	1

LANES REQUIRED TO BE OPEN BY HOUR AND TIME OF DAY

FALL SEASON SEPTEMBER 16 THRU November 30

HR/DAY	MON	TUES	WEDS	THUR	FRI	SAT	SUN
0	1	1	1	1	1	1	1
1	1	1	1	1	1	1	1
2	1	1	1	1	1	1	1
3	1	1	1	1	1	1	1
4	1	1	1	1	1	1	1
5	1	1	1	1	1	1	1
6	1	2	2	2	1	1	1
7	2	2	2	2	2	1	1
8	2	2	2	2	2	1	1
9	2	2	2	2	2	1	1
10	2	2	2	2	2	2	2
11	2	2	2	2	2	2	2
12	2	2	2	2	2	2	2
13	2	2	2	2	2	2	2
14	2	2	2	2	2	2	2
15	2	2	2	2	2	2	2
16	2	2	2	2	2	2	2
17	2	2	2	2	2	2	2
18	2	2	2	2	2	2	2
19	2	2	2	2	2	2	2
20	1	1	1	1	2	1	1
21	1	1	1	1	1	1	1
22	1	1	1	1	1	1	1
23	1	1	1	1	1	1	1

WINTER SEAS. DECEMBER 1 THRU February 28

HR/DAY	MON	TUES	WEDS	THUR	FRI	SAT	SUN
0	1	1	1	1	1	1	1
1	1	1	1	1	1	1	1
2	1	1	1	1	1	1	1
3	1	1	1	1	1	1	1
4	1	1	1	1	1	1	1
5	1	1	1	1	1	1	1
6	1	1	1	1	1	1	1
7	2	2	2	2	2	1	1
8	2	2	2	2	2	1	1
9	2	2	2	2	2	1	1
10	2	2	2	2	2	2	1
11	2	2	2	2	2	2	2
12	2	2	2	2	2	2	2
13	2	2	2	2	2	2	2
14	2	2	2	2	2	2	2
15	2	2	2	2	2	2	2
16	2	2	2	2	2	2	2
17	2	2	2	2	2	2	2
18	2	2	2	2	2	2	2
19	1	1	1	1	2	2	1
20	1	1	1	1	1	1	1
21	1	1	1	1	1	1	1
22	1	1	1	1	1	1	1
23	1	1	1	1	1	1	1

NIAGARA: I-190 SOUTHBOUND INTERCHANGES N20 TO N19 (1,300 VEH/HR/LANE)

LANES REQUIRED TO BE OPEN BY HOUR AND TIME OF DAY

SPRING SEASON MARCH 1 THRU MAY 20

HR/DAY	MON	TUES	WEDS	THUR	FRI	SAT	SUN
0	1	1	1	1	1	1	1
1	1	1	1	1	1	1	1
2	1	1	1	1	1	1	1
3	1	1	1	1	1	1	1
4	1	1	1	1	1	1	1
5	1	1	1	1	1	1	1
6	2	2	2	2	2	1	1
7	2	2	2	2	2	1	1
8	2	2	2	2	2	1	1
9	2	2	2	2	2	2	1
10	2	2	2	2	2	2	2
11	2	2	2	2	2	2	2
12	2	2	2	2	2	2	2
13	2	2	2	2	2	2	2
14	2	2	2	2	2	2	2
15	2	2	2	2	2	2	2
16	2	2	2	2	2	2	2
17	2	2	2	2	2	2	2
18	2	2	2	2	2	2	2
19	1	1	1	1	2	2	2
20	1	1	1	1	1	2	1
21	1	1	1	1	1	2	1
22	1	1	1	1	1	2	1
23	1	1	1	1	1	1	1

SUMMER SEASON MAY 21 THRU SEPTEMBER 15

HR/DAY	MON	TUES	WEDS	THUR	FRI	SAT	SUN
0	1	1	1	1	1	1	1
1	1	1	1	1	1	1	1
2	1	1	1	1	1	1	1
3	1	1	1	1	1	1	1
4	1	1	1	1	1	1	1
5	1	1	1	1	1	1	1
6	2	2	2	2	2	1	1
7	2	2	2	2	2	1	1
8	2	2	2	2	2	1	1
9	2	2	2	2	2	2	2
10	2	2	2	2	2	2	2
11	2	2	2	2	2	2	2
12	2	2	2	2	2	2	2
13	2	2	2	2	2	2	2
14	2	2	2	2	2	2	2
15	2	2	2	2	2	2	2
16	2	2	2	2	2	2	2
17	2	2	2	2	2	2	2
18	2	2	2	2	2	2	2
19	2	1	1	2	2	2	2
20	1	1	1	2	2	2	2
21	1	2	1	1	2	2	1
22	1	2	2	1	2	2	1
23	1	1	1	1	2	2	1

LANES REQUIRED TO BE OPEN BY HOUR AND TIME OF DAY

FALL SEASON SEPTEMBER 16 THRU November 30

HR/DAY	MON	TUES	WEDS	THUR	FRI	SAT	SUN
0	1	1	1	1	1	1	1
1	1	1	1	1	1	1	1
2	1	1	1	1	1	1	1
3	1	1	1	1	1	1	1
4	1	1	1	1	1	1	1
5	1	1	1	1	1	1	1
6	2	2	2	2	2	1	1
7	2	2	2	2	2	1	1
8	2	2	2	2	2	1	1
9	2	2	2	2	2	2	2
10	2	2	2	2	2	2	2
11	2	2	2	2	2	2	2
12	2	2	2	2	2	2	2
13	2	2	2	2	2	2	2
14	2	2	2	2	2	2	2
15	2	2	2	2	2	2	2
16	2	2	2	2	2	2	2
17	2	2	2	2	2	2	2
18	2	2	2	2	2	2	2
19	1	1	1	2	2	2	1
20	1	1	1	1	1	2	1
21	1	1	1	1	1	1	1
22	1	1	1	1	1	1	1
23	1	1	1	1	1	1	1

WINTER SEAS. DECEMBER 1 THRU February 28

HR/DAY	MON	TUES	WEDS	THUR	FRI	SAT	SUN
0	1	1	1	1	1	1	1
1	1	1	1	1	1	1	1
2	1	1	1	1	1	1	1
3	1	1	1	1	1	1	1
4	1	1	1	1	1	1	1
5	1	1	1	1	1	1	1
6	2	2	2	2	1	1	1
7	2	2	2	2	2	1	1
8	2	2	2	2	2	1	1
9	2	2	2	2	2	1	1
10	2	2	2	2	2	2	2
11	2	2	2	2	2	2	2
12	2	2	2	2	2	2	2
13	2	2	2	2	2	2	2
14	2	2	2	2	2	2	2
15	2	2	2	2	2	2	2
16	2	2	2	2	2	2	2
17	2	2	2	2	2	2	2
18	2	2	2	2	2	2	2
19	1	1	1	1	1	1	1
20	1	1	1	1	1	1	1
21	1	1	1	1	1	1	1
22	1	1	1	1	1	1	1
23	1	1	1	1	1	1	1

NOTES:

1) THE NEW YORK STATE THRUWAY IS A LIMITED ACCESS, HIGH-SPEED, HIGH-VOLUME HIGHWAY. TRAFFIC SHALL BE MAINTAINED IN ACCORDANCE WITH THE *MANUAL ON UNIFORM TRAFFIC CONTROL DEVICES (MUTCD)*, THE *WORK ZONE TRAFFIC CONTROL PLANS*, AND THE *STANDARD SPECIFICATIONS* SECTION 619 AS AMENDED BY THE AUTHORITY.

2) LANE CLOSURES ON THE THRUWAY SHALL ONLY BE ALLOWED IN ACCORDANCE WITH THESE TRAFFIC MANAGEMENT TABLE(S), UNLESS INDICATED OTHERWISE IN THE CONTRACT PLANS OR PROPOSAL DOCUMENTS.

3) LANE CLOSURE CHARTS SHALL APPLY AS FOLLOWS:

- 1,150 VEH/HR/LANE: APPLIES TO ALL WORK REQUIRING LANE CLOSURE(S) EXCEPT AS PERMITTED BELOW.

- 1,300 VEH/HR/LANE: APPLIES TO NON-EVASIVE WORK WHERE WORKERS AND/OR EQUIPMENT ARE LOCATED 4 FT. OR MORE FROM TRAVEL (SPACE) LANE, OR AS APPROVED BY THE THRUWAY PROJECT ENGINEER. WORK SHOULD BE ABLE TO BE IMMEDIATELY STOPPED AND LANE CLOSURE(S) REMOVED IN THE EVENT QUEUES, GREATER THAN 1 MILE, DEVELOP.

NEW YORK STATE OF OPPORTUNITY. Thruway Authority

U.S. CUSTOMARY STANDARD SHEET

LANE CLOSURE CHARTS
1,300 VEHICLES PER HOUR
BUFFALO DIVISION
(SHEET 36 OF 37)

APPROVED SEPTEMBER 1, 2018

/S/ PATRICK THOMPSON, P.E.
DIRECTOR DESIGN SUPPORT SERVICES BUREAU

ISSUED UNDER DB 18-003

TA 619-37

NIAGARA: I-190 NORTHBOUND INTERCHANGES N20 TO N21 (1,300 VEH/HR/LANE)

LANES REQUIRED TO BE OPEN BY HOUR AND TIME OF DAY

SPRING SEASON MARCH 1 THRU MAY 20

HR/DAY	MON	TUES	WEDS	THUR	FRI	SAT	SUN
0	1	1	1	1	1	1	1
1	1	1	1	1	1	1	1
2	1	1	1	1	1	1	1
3	1	1	1	1	1	1	1
4	1	1	1	1	1	1	1
5	1	1	1	1	1	1	1
6	2	1	1	1	1	1	1
7	2	2	2	2	2	1	1
8	2	2	2	2	2	1	1
9	2	2	2	2	2	2	1
10	2	2	2	2	2	2	2
11	2	2	2	2	2	2	2
12	2	2	2	2	2	2	2
13	2	2	2	2	2	2	2
14	2	2	2	2	2	2	2
15	2	2	2	2	2	2	2
16	2	2	2	2	2	2	2
17	2	2	2	2	2	2	2
18	2	2	2	2	2	2	2
19	2	2	2	2	2	2	2
20	1	1	1	1	2	2	1
21	1	1	1	1	1	1	1
22	1	1	1	1	1	1	1
23	1	1	1	1	1	1	1

SUMMER SEASON MAY 21 THRU SEPTEMBER 15

HR/DAY	MON	TUES	WEDS	THUR	FRI	SAT	SUN
0	1	1	1	1	1	1	1
1	1	1	1	1	1	1	1
2	1	1	1	1	1	1	1
3	1	1	1	1	1	1	1
4	1	1	1	1	1	1	1
5	1	1	1	1	1	1	1
6	2	2	2	2	2	1	1
7	2	2	2	2	2	1	1
8	2	2	2	2	2	1	1
9	2	2	2	2	2	2	2
10	2	2	2	2	2	2	2
11	2	2	2	2	2	2	2
12	2	2	2	2	2	2	2
13	2	2	2	2	2	2	2
14	2	2	2	2	2	2	2
15	2	2	2	2	2	2	2
16	2	2	2	2	2	2	2
17	2	2	2	2	2	2	2
18	2	2	2	2	2	2	2
19	2	2	2	2	2	2	2
20	2	2	2	2	2	2	2
21	1	1	1	1	2	2	1
22	1	1	1	1	1	1	1
23	1	1	1	1	1	1	1

LANES REQUIRED TO BE OPEN BY HOUR AND TIME OF DAY

FALL SEASON SEPTEMBER 16 THRU November 30

HR/DAY	MON	TUES	WEDS	THUR	FRI	SAT	SUN
0	1	1	1	1	1	1	1
1	1	1	1	1	1	1	1
2	1	1	1	1	1	1	1
3	1	1	1	1	1	1	1
4	1	1	1	1	1	1	1
5	1	1	1	1	1	1	1
6	2	2	2	2	2	1	1
7	2	2	2	2	2	1	1
8	2	2	2	2	2	1	1
9	2	2	2	2	2	2	1
10	2	2	2	2	2	2	2
11	2	2	2	2	2	2	2
12	2	2	2	2	2	2	2
13	2	2	2	2	2	2	2
14	2	2	2	2	2	2	2
15	2	2	2	2	2	2	2
16	2	2	2	2	2	2	2
17	2	2	2	2	2	2	2
18	2	2	2	2	2	2	2
19	2	2	2	2	2	2	2
20	1	1	1	1	2	1	1
21	1	1	1	1	1	1	1
22	1	1	1	1	1	1	1
23	1	1	1	1	1	1	1

WINTER SEAS. DECEMBER 1 THRU February 28

HR/DAY	MON	TUES	WEDS	THUR	FRI	SAT	SUN
0	1	1	1	1	1	1	1
1	1	1	1	1	1	1	1
2	1	1	1	1	1	1	1
3	1	1	1	1	1	1	1
4	1	1	1	1	1	1	1
5	1	1	1	1	1	1	1
6	1	1	1	1	1	1	1
7	2	2	2	2	2	1	1
8	2	2	2	2	2	1	1
9	2	2	2	2	2	1	1
10	2	2	2	2	2	2	2
11	2	2	2	2	2	2	2
12	2	2	2	2	2	2	2
13	2	2	2	2	2	2	2
14	2	2	2	2	2	2	2
15	2	2	2	2	2	2	2
16	2	2	2	2	2	2	2
17	2	2	2	2	2	2	2
18	2	2	2	2	2	2	2
19	2	2	2	2	2	2	1
20	1	1	1	1	1	1	1
21	1	1	1	1	1	1	1
22	1	1	1	1	1	1	1
23	1	1	1	1	1	1	1

NIAGARA: I-190: SOUTHBOUND INTERCHANGES N21 TO N20 (1,300 VEH/HR/LANE)

LANES REQUIRED TO BE OPEN BY HOUR AND TIME OF DAY

SPRING SEASON MARCH 1 THRU MAY 20

HR/DAY	MON	TUES	WEDS	THUR	FRI	SAT	SUN
0	1	1	1	1	1	1	1
1	1	1	1	1	1	1	1
2	1	1	1	1	1	1	1
3	1	1	1	1	1	1	1
4	1	1	1	1	1	1	1
5	1	1	1	1	1	1	1
6	2	2	2	2	2	1	1
7	2	2	2	2	2	1	1
8	2	2	2	2	2	1	1
9	2	2	2	2	2	2	1
10	2	2	2	2	2	2	2
11	2	2	2	2	2	2	2
12	2	2	2	2	2	2	2
13	2	2	2	2	2	2	2
14	2	2	2	2	2	2	2
15	2	2	2	2	2	2	2
16	2	2	2	2	2	2	2
17	2	2	2	2	2	2	2
18	2	2	2	2	2	2	2
19	2	1	2	2	2	2	2
20	1	1	1	1	2	2	2
21	1	1	1	1	2	2	1
22	1	1	1	1	1	2	1
23	1	1	1	1	1	1	1

SUMMER SEASON MAY 21 THRU SEPTEMBER 15

HR/DAY	MON	TUES	WEDS	THUR	FRI	SAT	SUN
0	1	1	1	1	1	1	1
1	1	1	1	1	1	1	1
2	1	1	1	1	1	1	1
3	1	1	1	1	1	1	1
4	1	1	1	1	1	1	1
5	1	1	1	1	1	1	1
6	2	2	2	2	2	1	1
7	2	2	2	2	2	1	1
8	2	2	2	2	2	2	1
9	2	2	2	2	2	2	2
10	2	2	2	2	2	2	2
11	2	2	2	2	2	2	2
12	2	2	2	2	2	2	2
13	2	2	2	2	2	2	2
14	2	2	2	2	2	2	2
15	2	2	2	2	2	2	2
16	2	2	2	2	2	2	2
17	2	2	2	2	2	2	2
18	2	2	2	2	2	2	2
19	2	2	2	2	2	2	2
20	2	2	2	2	2	2	2
21	1	2	2	2	2	2	2
22	1	2	2	1	2	2	1
23	1	1	1	1	2	2	1

LANES REQUIRED TO BE OPEN BY HOUR AND TIME OF DAY

FALL SEASON SEPTEMBER 16 THRU November 30

HR/DAY	MON	TUES	WEDS	THUR	FRI	SAT	SUN
0	1	1	1	1	1	1	1
1	1	1	1	1	1	1	1
2	1	1	1	1	1	1	1
3	1	1	1	1	1	1	1
4	1	1	1	1	1	1	1
5	1	1	1	1	1	1	1
6	2	2	2	2	2	1	1
7	2	2	2	2	2	1	1
8	2	2	2	2	2	1	1
9	2	2	2	2	2	2	2
10	2	2	2	2	2	2	2
11	2	2	2	2	2	2	2
12	2	2	2	2	2	2	2
13	2	2	2	2	2	2	2
14	2	2	2	2	2	2	2
15	2	2	2	2	2	2	2
16	2	2	2	2	2	2	2
17	2	2	2	2	2	2	2
18	2	2	2	2	2	2	2
19	1	2	2	2	2	2	2
20	1	1	1	1	2	2	1
21	1	1	1	1	2	2	1
22	1	1	1	1	1	1	1
23	1	1	1	1	1	1	1

WINTER SEAS. DECEMBER 1 THRU February 28

HR/DAY	MON	TUES	WEDS	THUR	FRI	SAT	SUN
0	1	1	1	1	1	1	1
1	1	1	1	1	1	1	1
2	1	1	1	1	1	1	1
3	1	1	1	1	1	1	1
4	1	1	1	1	1	1	1
5	1	1	1	1	1	1	1
6	2	2	2	2	2	1	1
7	2	2	2	2	2	1	1
8	2	2	2	2	2	1	1
9	2	2	2	2	2	1	1
10	2	2	2	2	2	2	2
11	2	2	2	2	2	2	2
12	2	2	2	2	2	2	2
13	2	2	2	2	2	2	2
14	2	2	2	2	2	2	2
15	2	2	2	2	2	2	2
16	2	2	2	2	2	2	2
17	2	2	2	2	2	2	2
18	2	2	2	2	2	2	2
19	1	1	1	1	2	2	1
20	1	1	1	1	1	1	1
21	1	1	1	1	2	1	1
22	1	1	1	1	1	1	1
23	1	1	1	1	1	1	1

NOTES:

1) THE NEW YORK STATE THRUWAY IS A LIMITED ACCESS, HIGH-SPEED, HIGH-VOLUME HIGHWAY. TRAFFIC SHALL BE MAINTAINED IN ACCORDANCE WITH THE *MANUAL ON UNIFORM TRAFFIC CONTROL DEVICES (MUTCD)*, THE *WORK ZONE TRAFFIC CONTROL PLANS*, AND THE *STANDARD SPECIFICATIONS* SECTION 619 AS AMENDED BY THE AUTHORITY.

2) LANE CLOSURES ON THE THRUWAY SHALL ONLY BE ALLOWED IN ACCORDANCE WITH THESE TRAFFIC MANAGEMENT TABLE(S), UNLESS INDICATED OTHERWISE IN THE CONTRACT PLANS OR PROPOSAL DOCUMENTS.

3) LANE CLOSURE CHARTS SHALL APPLY AS FOLLOWS:

- 1,150 VEH/HR/LANE: APPLIES TO ALL WORK REQUIRING LANE CLOSURE(S) EXCEPT AS PERMITTED BELOW.

- 1,300 VEH/HR/LANE: APPLIES TO NON-EVASIVE WORK WHERE WORKERS AND/OR EQUIPMENT ARE LOCATED 4 FT. OR MORE FROM TRAVEL (SPACE) LANE, OR AS APPROVED BY THE THRUWAY PROJECT ENGINEER. WORK SHOULD BE ABLE TO BE IMMEDIATELY STOPPED AND LANE CLOSURE(S) REMOVED IN THE EVENT QUEUES, GREATER THAN 1 MILE, DEVELOP.

NEW YORK STATE OF OPPORTUNITY. Thruway Authority

U.S. CUSTOMARY STANDARD SHEET

LANE CLOSURE CHARTS
1,300 VEHICLES PER HOUR
BUFFALO DIVISION
(SHEET 37 OF 37)

APPROVED SEPTEMBER 1, 2018

/S/ PATRICK THOMPSON, P.E.
DIRECTOR DESIGN SUPPORT SERVICES BUREAU

ISSUED UNDER DB 18-003

TA 619-37

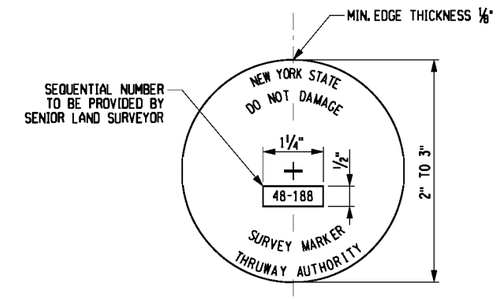

PERMANENT SURVEY MARKER TOP VIEW

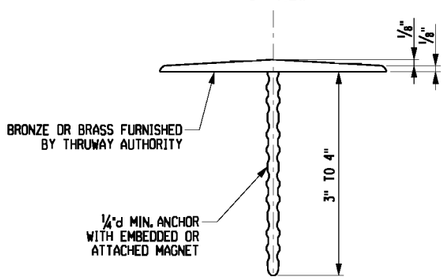

PERMANENT SURVEY MARKER ELEVATION DETAIL

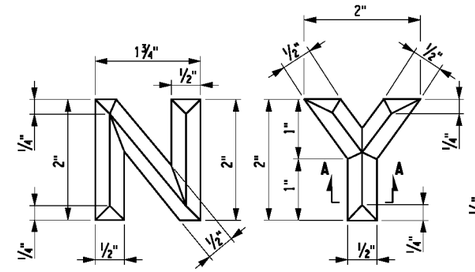

INCISED LETTERS

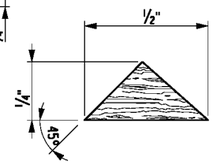

SECTION A-A

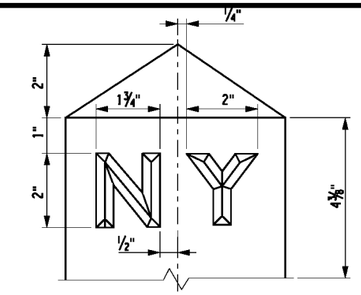

ELEVATION

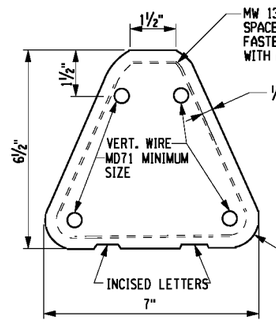

WIRE AND TIE REINFORCEMENT

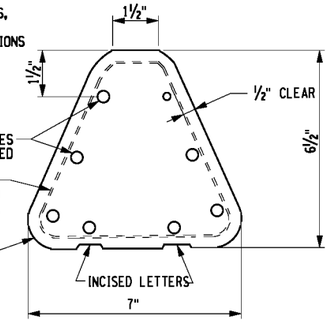

MESH REINFORCEMENT

SECTIONAL PLANS

NOTES:

1. CAP SET FLUSH TO SURFACE.
2. SURFACE OF ALUMINUM CAP TO BE IN CONTACT WITH CONCRETE. GROUT SHALL BE THOROUGHLY COATED WITH ZINC CHROMATE PRIMER, 708-04.
3. REBAR SHALL BE DRIVEN WITH A DRIVING CAP ACCEPTABLE TO THE EIC AND DESIGNED TO PREVENT "MUSHROOMING" OF THE TOP OF THE REBAR DURING DRIVING. SILICONE SEALANT IS NOT REQUIRED IF THE R.O.W. MARKER CAP IS FITTED WITH A PREFORMED PLASTIC INSERT.
4. SHAPE OF THE MARKER CAP IS APPROXIMATE. OTHER SHAPES WILL BE ACCEPTED IF THEY CONFORM TO THE MINIMUM WEIGHT AND DIMENSIONS GIVEN IN THE MARKER CAP DETAIL. THE MARKER CAP SHALL FIT TIGHTLY TO THE REBAR. MARKER CAPS WHICH MAY BE REMOVED FROM THE REBAR WITH MINIMUM OR MODERATE EFFORT WILL NOT BE ACCEPTED.
5. LENGTH OF REBAR MAY BE REDUCED A.O.B.E. IF AN OBSTRUCTION WHICH CANNOT BE PENETRATED IS ENCOUNTERED. HOWEVER, THE LENGTH OF THE SHANK WILL NOT BE LESS THAN 2'-0" IN HARD, DENSE, OR STONY SOIL. REBAR TO BE EPOXY COATED.
6. AFTER THE CONCRETE RIGHT OF WAY MARKER OR PERMANENT SURVEY MARKER IS IN PLACE, THE EXCAVATION SHALL BE BACKFILLED IN ACCORDANCE WITH THE REQUIREMENTS OF STANDARD SPECIFICATIONS SECTION 203-3.15 "FILL AND BACKFILL AT STRUCTURES, CULVERTS, PIPES, CONDUITS, AND DIRECT BURIAL CABLES".

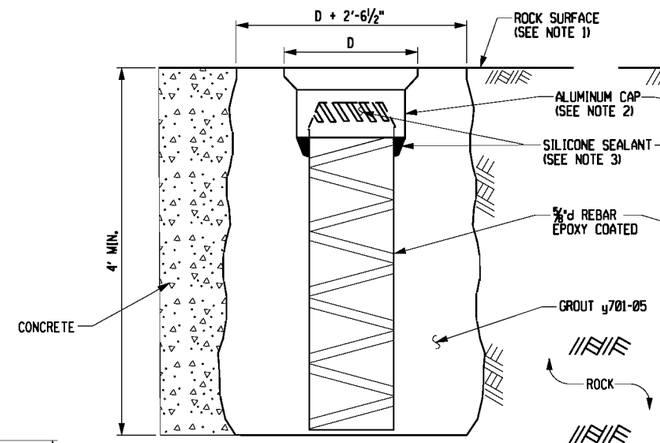

STEEL PIN AND CAP R.O.W. MARKER INSTALLATION DETAIL IN ROCK OR CONCRETE

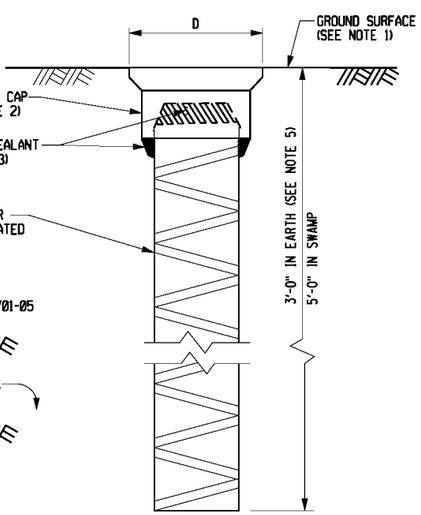

STEEL PIN AND CAP R.O.W. MARKER INSTALLATION DETAIL IN EARTH OR SWAMP

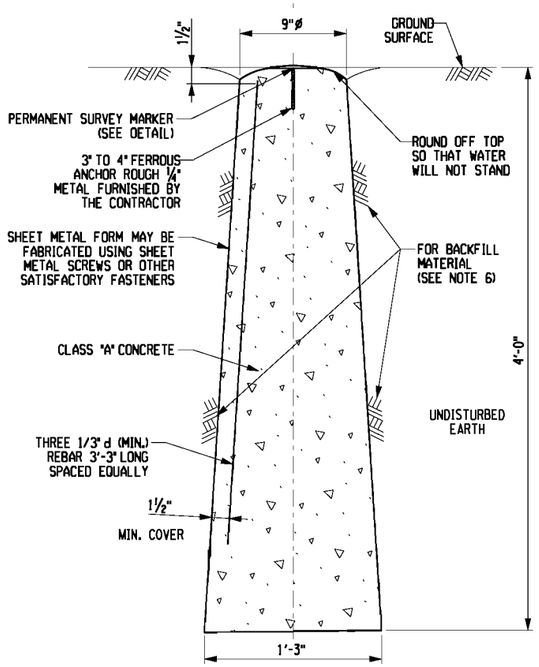

PERMANENT SURVEY MARKER INSTALLATION DETAIL

CAST IN PLACE PERMANENT SURVEY MARKER

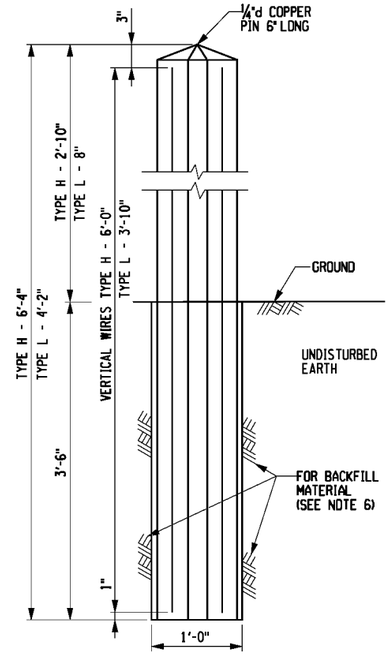

CONCRETE RIGHT-OF-WAY MARKER INSTALLATION DETAIL

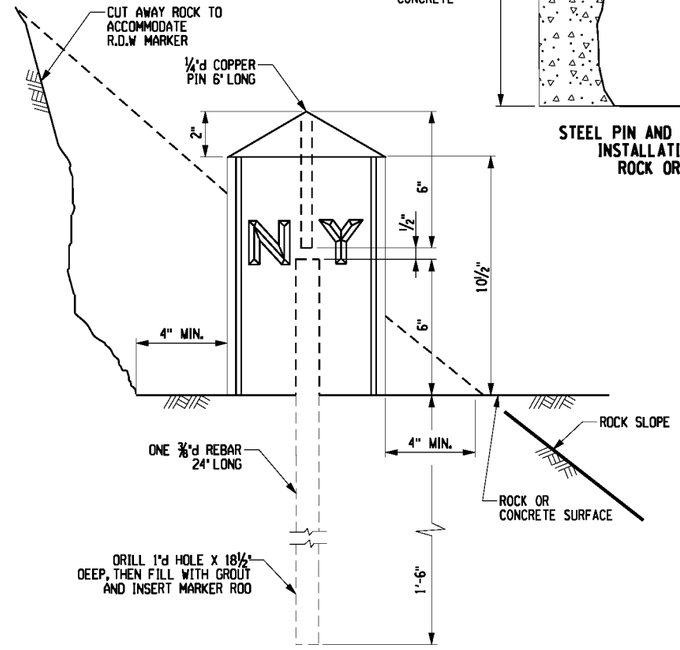

CONCRETE RIGHT-OF-WAY-MARKER IN ROCK OR CONCRETE

PRECAST CONCRETE RIGHT-OF-WAY MARKER

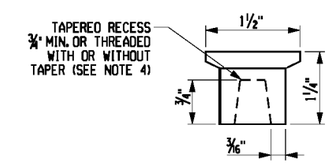

STEEL PIN AND CAP R.O.W. MARKER

NEW YORK STATE OF OPPORTUNITY. Thruway Authority

U.S. CUSTOMARY STANDARD SHEET

R.O.W. AND SURVEY MARKERS (DRAWING RSM))

APPROVED SEPTEMBER 21, 2016

/S/ PATRICK THOMPSON, P.E.
DIRECTOR DESIGN SUPPORT SERVICES BUREAU

ISSUED UNDER EI 16-001

TA 625-01

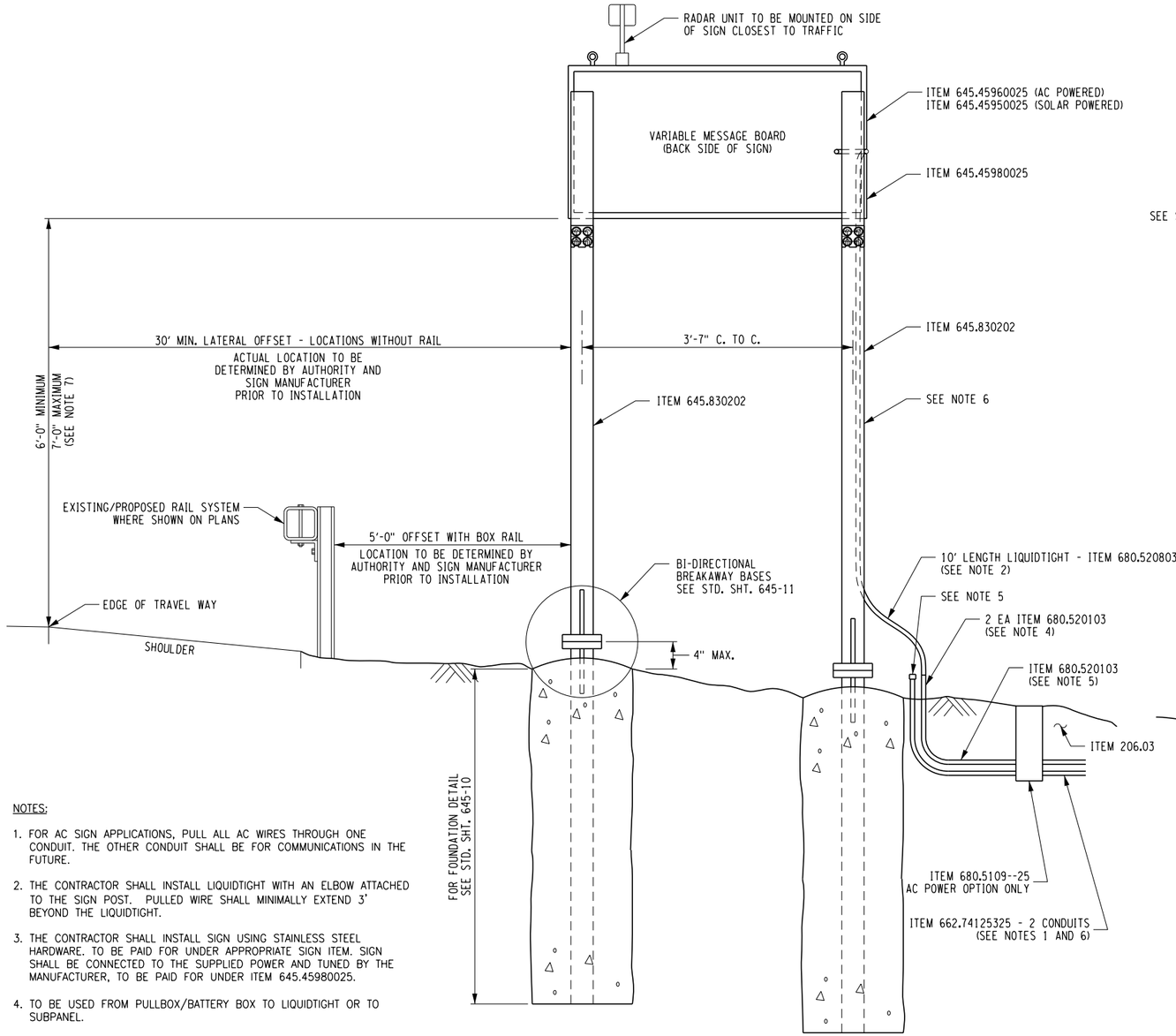

ELEVATION
WRONG WAY DETERRANCE SIGN

(READ IN DIRECTION OF TRAVEL)
N.T.S.

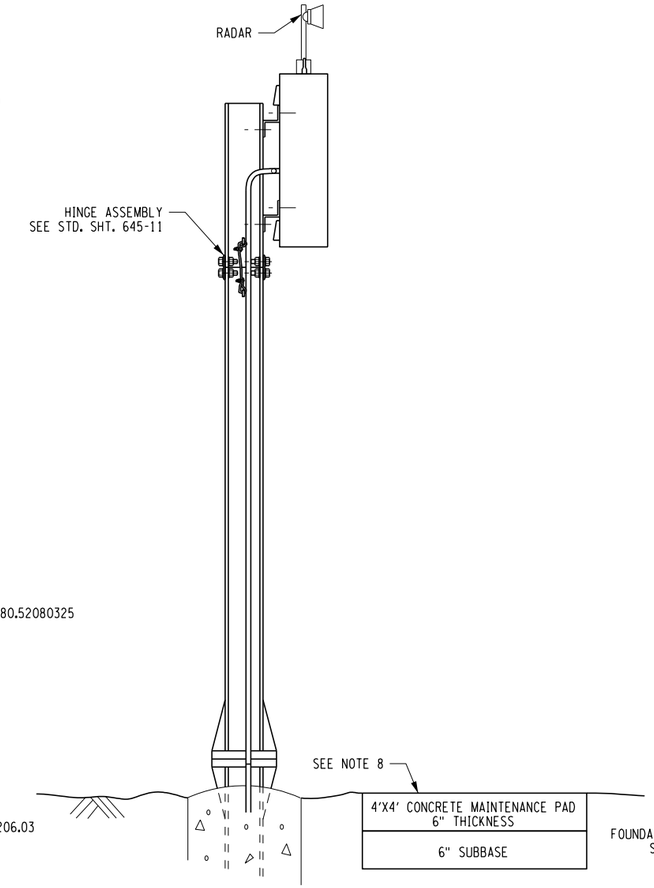

SIDE VIEW
WRONG WAY DETERRANCE SIGN

N.T.S.

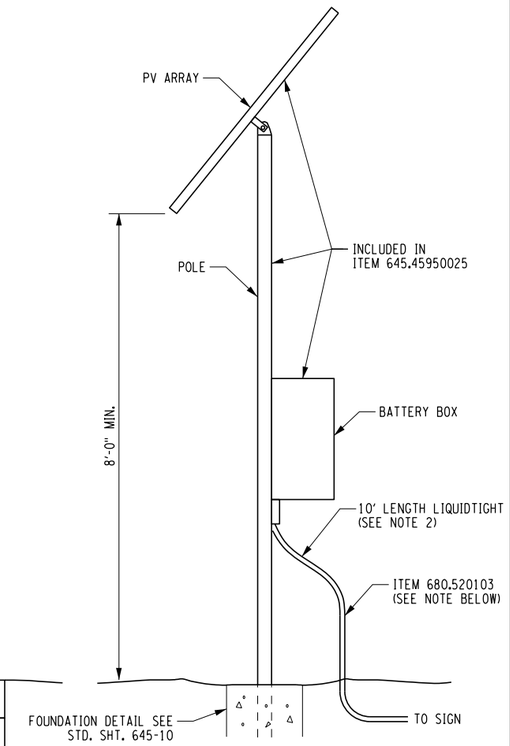

NOTE:

FOR SOLAR POWERED SIGNS INSTALL ONLY ONE RUN OF ITEM 680.520103 FROM BATTERY BOX TO SIGN.

ELEVATION
SOLAR POWER STATION
ITEM 645.45950025

(WHERE APPLICABLE)
N.T.S.

NOTES:

1. FOR AC SIGN APPLICATIONS, PULL ALL AC WIRES THROUGH ONE CONDUIT. THE OTHER CONDUIT SHALL BE FOR COMMUNICATIONS IN THE FUTURE.
2. THE CONTRACTOR SHALL INSTALL LIQUIDTIGHT WITH AN ELBOW ATTACHED TO THE SIGN POST. PULLED WIRE SHALL MINIMALLY EXTEND 3' BEYOND THE LIQUIDTIGHT.
3. THE CONTRACTOR SHALL INSTALL SIGN USING STAINLESS STEEL HARDWARE. TO BE PAID FOR UNDER APPROPRIATE SIGN ITEM. SIGN SHALL BE CONNECTED TO THE SUPPLIED POWER AND TUNED BY THE MANUFACTURER, TO BE PAID FOR UNDER ITEM 645.45980025.
4. TO BE USED FROM PULLBOX/BATTERY BOX TO LIQUIDTIGHT OR TO SUBPANEL.
5. FOR FUTURE COMMUNICATION CONDUIT ON AC SIGNS ONLY, INSTALL (2 EACH) ITEM 662.74125325 HDPE INNERDUCT FROM POWER SOURCE TO PULL BOX. INSTALL (2 EACH) ITEM 680.520103 FROM PULLBOX TO SIGN. ONE TO BE CAPPED OFF AND MADE WATER TIGHT.
6. WHERE APPLICABLE, AN ELECTRICAL BOX WILL BE ATTACHED TO THIS POST. IN THIS CASE THE CONDUIT SHALL CONNECT INTO BOX. LIQUIDTIGHT SHALL CONNECT THE ELECTRICAL BOX TO SIGN (SEE SITE LOCATION PLAN).
7. THE MOUNTING HEIGHT SHALL BE MEASURED FROM THE BOTTOM OF THE SIGN PANEL TO THE NEAREST EDGE OF TRAVEL WAY.
8. WHERE SITE CONDITIONS ALLOW, A CONCRETE MAINTENANCE WORKPAD SHALL BE INSTALLED. SEE CONTRACT PLANS FOR WORK ITEMS.

ITEM	DESCRIPTION	UNIT
206.03	CONDUIT EXCAVATION AND BACKFILL INCLUDING SURFACE RESTORATION	LF
645.45950025	WRONG WAY DETERRENCE SIGN WITH MOUNTING – SOLAR POWERED	EA
645.45960025	WRONG WAY DETERRENCE SIGN WITH MOUNTING – AC POWERED	EA
645.45980025	SIGN COMMISSIONING	EA
645.830202	TYPE B SIGN POST, GALVANIZED, W150x13.5 SECTION, BI-DIRECTIONAL BREAKAWAY BASE	EA
662.74125325	HDPE INNERDUCT (1 1/4")	LF
680.5109--25	PULLBOX – B	EA
680.520103	CONDUIT, METAL STEEL, ZINC COATED, 1" DIA.	LF
680.52080325	1 NPS CONDUIT, FLEXIBLE, LIQUIDTIGHT PVC	LF

NEW YORK STATE OF OPPORTUNITY. Thruway Authority

U.S. CUSTOMARY STANDARD SHEET

WRONG WAY DETERRENCE SIGNS
(DRAWING WWDS)

APPROVED SEPTEMBER 1, 2018

/S/ PATRICK THOMPSON, P.E.
DIRECTOR DESIGN SUPPORT SERVICES BUREAU

ISSUED UNDER DB 18-003

TA 645-01

MILE MARKER PANEL HEIGHT
'A'
2'-0"
3'-0"
4'-0"
5'-0"

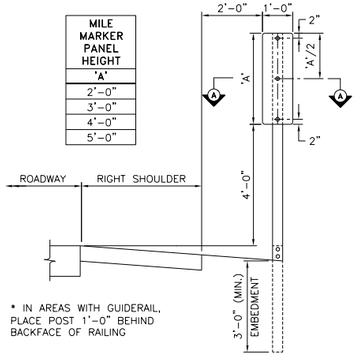

MILE MARKER
POST MOUNT INSTALLATION DETAIL
N.T.S.

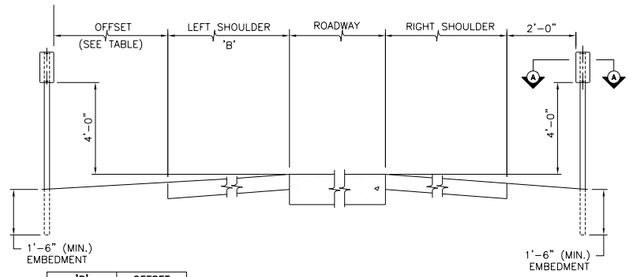

'B'	OFFSET
4'-0"	8'-0"
6'-0"	6'-0"
10'-0"	4'-0"
12'-0"	2'-0"

TENTH MILE MARKER AND DELINEATOR
POST MOUNT INSTALLATION DETAIL
N.T.S.

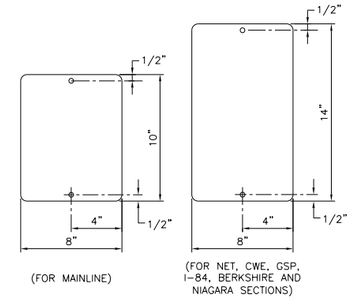

TENTH MILE MARKER
N.T.S.

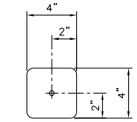

SINGLE SNOWPLOW MARKER (GREEN)
N.T.S.

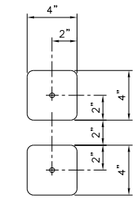

DOUBLE SNOWPLOW MARKER (GREEN)
N.T.S.

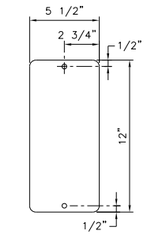

SINGLE DELINEATOR (WHITE OR YELLOW)
N.T.S.

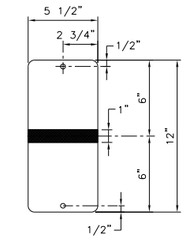

DOUBLE DELINEATOR (WHITE OR YELLOW)
N.T.S.

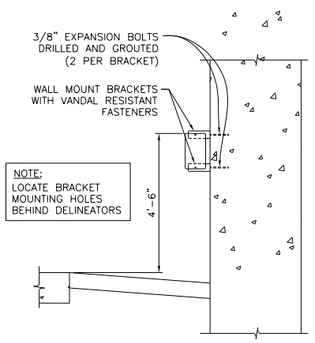

TENTH MILE MARKER AND DELINEATOR
WALL MOUNT INSTALLATION DETAIL
N.T.S.

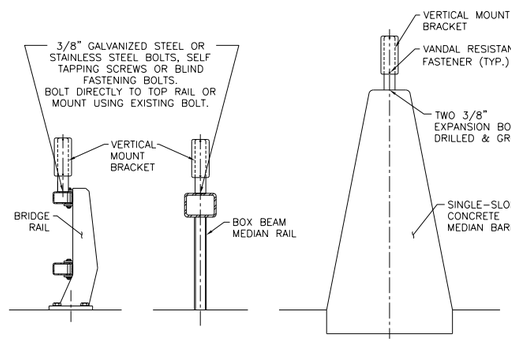

DELINEATOR
VERTICAL MOUNT INSTALLATION DETAILS
N.T.S.

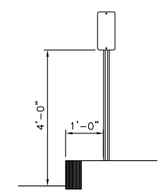

CURB SECTION
N.T.S.

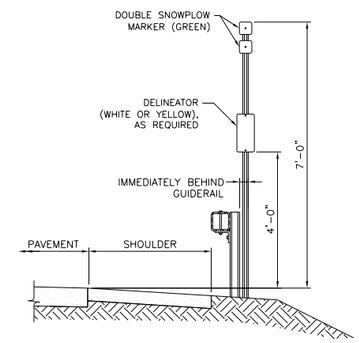

SNOWPLOW MARKER/DELINEATOR
AT BEGINNING OF GUIDERAIL SECTION
N.T.S.

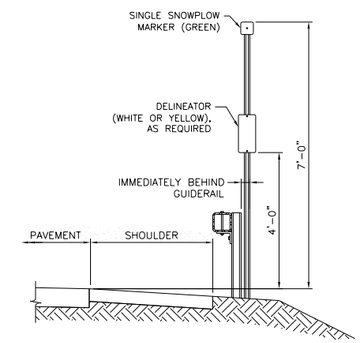

SNOWPLOW MARKER/DELINEATOR
AT END OF GUIDERAIL SECTION
N.T.S.

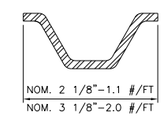

SECTION B-B
N.T.S.

NOTES:

1. MATERIAL SHALL CONFORM TO EITHER A.S.T.M. A-499 OR A.S.T.M. A-36.
2. GALVANIZING SHALL CONFORM TO A.S.T.M. A-123.
3. REMOVE ALL BURRS AND SHARP EDGES.
4. TENTH MILE MARKERS AND DELINEATORS: FOR INSTALLATION WHERE THE DISTANCE FROM FINISHED GRADE TO TOP OF POST IS LESS THAN OR EQUAL TO 5'-0", USE 1.1 #/FT POST SIZE. WHERE THE DISTANCE IS GREATER THAN 5'-0", USE 2.0 #/FT POST SIZE, UNLESS OTHERWISE SPECIFIED IN THE CONTRACT DOCUMENTS.
5. MILE MARKERS (PANEL HEIGHTS OF 2'-0" TO 5'-0") SHALL BE MOUNTED ON 2.0 #/FT POSTS REGARDLESS OF POST HEIGHT UNLESS OTHERWISE SPECIFIED IN THE CONTRACT DOCUMENTS.

VERTICAL MOUNT BRACKET NOTES:

1. WHEN GALVANIZED STEEL IS USED FOR BRACKETS, SPACERS THAT DO NOT INDUCE CORROSION MUST BE USED.
2. BRACKETS MAY BE USED FOR MOUNTING DELINEATORS OR REFERENCE MARKERS ON BRIDGE RAIL, GUIDE RAIL, OR AS OTHERWISE NEEDED.

MOUNTING HOLE SPACING TABLE	
'X'	DESCRIPTION
11"	FOR 5 1/2" x 12" DELINEATOR
9"	FOR 8" x 10" TENTH MILE MARKER
13"	FOR 8" x 14" TENTH MILE MARKER

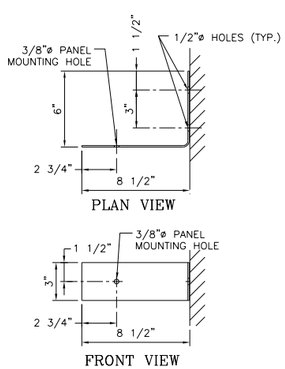

WALL MOUNT BRACKET
N.T.S.

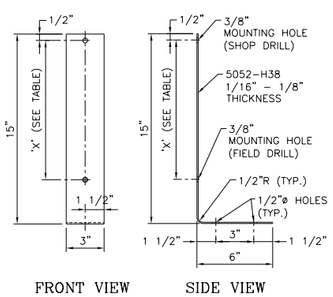

VERTICAL MOUNT BRACKET
N.T.S.

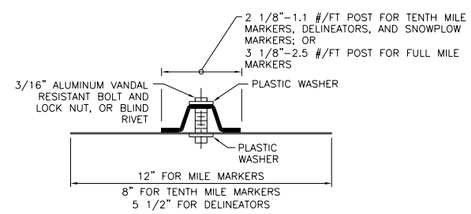

POST MOUNTED MARKERS AND DELINEATORS

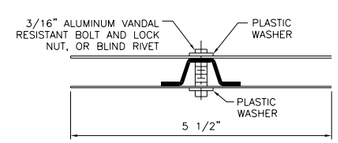

BACK TO BACK DELINEATORS

SECTION A-A
N.T.S.

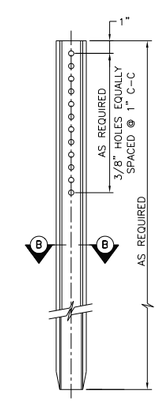

U-SECTION
POST DETAIL
N.T.S.

NEW YORK STATE OF OPPORTUNITY. Thruway Authority

U.S. CUSTOMARY STANDARD SHEET

REFERENCE MARKER DETAILS
SHEET 1 OF 2
(DRAWING DMM-1)

APPROVED JANUARY 1, 2019

/S/ PATRICK THOMPSON, P.E.
DIRECTOR DESIGN SUPPORT SERVICES BUREAU

ISSUED UNDER DB 18-006

TA 646-01

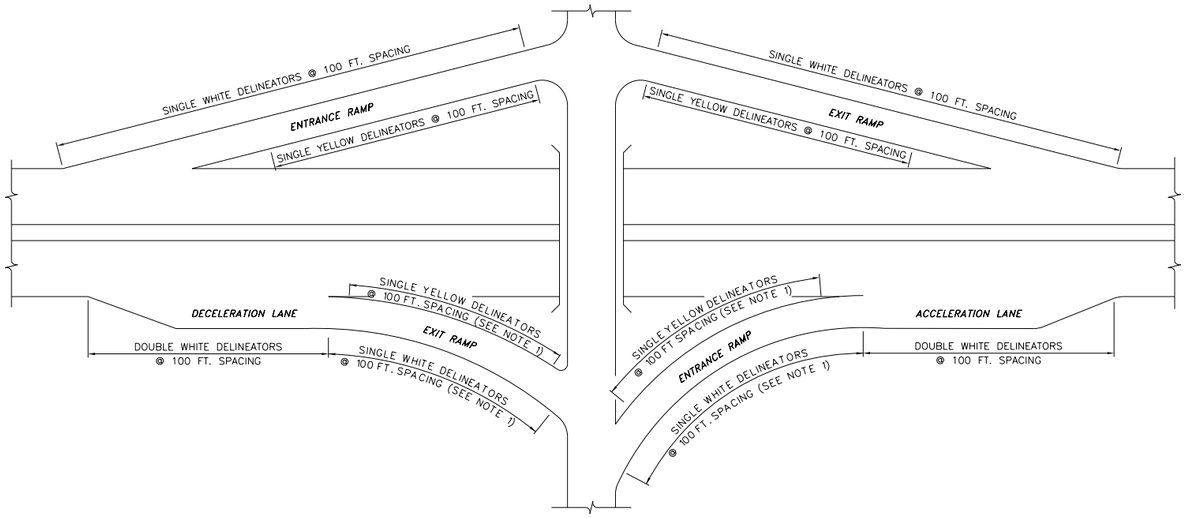

DELINEATOR LAYOUT FOR INTERCHANGES

N.T.S.

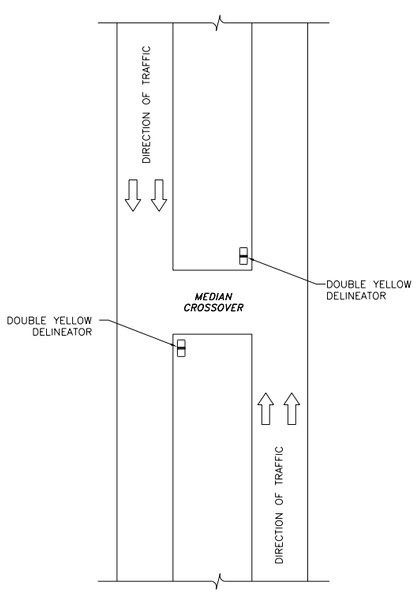

DELINEATOR LAYOUT
MEDIAN CROSSOVERS

N.T.S.

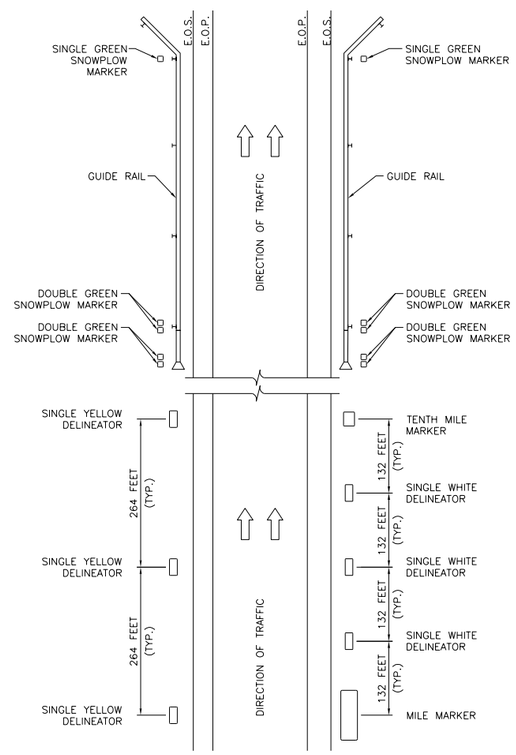

MARKER AND DELINEATOR LAYOUT
FOR THRUWAY MAINLINE

N.T.S.

NOTES:

1. THE TYPICAL SPACING OF DELINEATORS FOR INTERCHANGES IS 100 FEET. FOR LOCATIONS WHERE THE ROADWAY HAS A DEGREE OF CURVE OF 5 DEGREES OR MORE (OR A RADIUS OF CURVE OF 1000 FEET OR LESS), THE SPACING SHALL BE 50 FEET.

2. ON THRUWAY RAMPS WHERE TWO-WAY TRAFFIC IS SEPARATED BY BARRIER (CONCRETE, CORRUGATED BEAM, ETC.), BACK-TO-BACK YELLOW DELINEATORS SHALL BE INSTALLED ALONG THE BARRIER AT A SPACING OF 50 FEET.

3. SOME EXISTING MARKERS AND DELINEATORS WITHIN THE PROJECT LIMITS MAY NOT BE IN THE CORRECT LOCATIONS. THE CONTRACTOR SHALL INCLUDE IN THE PRICE BID FOR EACH RESPECTIVE MARKER AND/OR DELINEATOR THE COST TO ACCURATELY DETERMINE THE EXACT LOCATION PRIOR TO INSTALLATION. OVERHEAD AND MAINLINE STRUCTURES SHALL BE USED AS FIXED REFERENCE GUIDES FOR THE INSTALLATION. THE ENGINEER SHALL APPROVE THE EXACT LOCATIONS PRIOR TO INSTALLATION. ANY COST FOR THIS LAYOUT WORK SHALL BE INCLUDED IN THE PRICE BID FOR THE MARKERS AND/OR DELINEATORS.

4. WHERE AN EXISTING TENTH MILE MARKER FALLS WITHIN A LINE OF DOUBLE WHITE DELINEATORS, THE TENTH MILE MARKER SHALL REMAIN AT ITS PRESENT LOCATION.

5. POSTS, BANDS, BRACKETS, AND ALL NECESSARY HARDWARE ARE TO BE FURNISHED BY THE CONTRACTOR. DELINEATORS, MILE MARKERS, TENTH MILE MARKERS, AND SNOWPLOW MARKERS ARE TO BE FURNISHED BY THE AUTHORITY. THE DESIGN ENGINEER SHALL PROVIDE THE SIGN SHOP WITH DELINEATOR, MILE MARKER, TENTH MILE MARKER, AND SNOWPLOW MARKER REQUIREMENTS DURING PROJECT DESIGN AS WELL AS AN APPROXIMATE DATE WHEN NEEDED IN THE FIELD. DURING CONSTRUCTION, AT LEAST ONE MONTH PRIOR TO SCHEDULED INSTALLATION, THE ENGINEER-IN- CHARGE SHALL CONTACT THE SIGN SHOP TO CONFIRM THE DATE WHEN THE MATERIAL IS NEEDED IN THE FIELD. THE SIGN SHOP WILL PREPARE THE SHIPMENT AND ARRANGE FOR DIVISION HIGHWAY TO PICK UP THE DELINEATORS AND/OR MARKERS. THE CONTRACTOR SHALL THEN ARRANGE TO PICK UP THE DELINEATORS AND/OR MARKERS FROM DIVISION HIGHWAY. COSTS FOR PICKING UP THE DELINEATORS AND/OR MARKERS FROM DIVISION HIGHWAY ARE TO BE INCLUDED IN THE PRICE BID FOR EACH RESPECTIVE ITEM.

6. IDENTICAL MILE MARKERS FOR OPPOSITE DIRECTIONS OF TRAVEL SHALL BE LOCATED DIRECTLY ACROSS FROM EACH OTHER.

7. ON CURVES, DELINEATOR FACES SHALL BE ORIENTED TO PROVIDE OPTIMUM VISIBILITY AT NIGHT. EXACT ORIENTATION WILL VARY BASED UPON THE DEGREE OF CURVE.

8. DELINEATORS, MILE MARKERS, TENTH MILE MARKERS, AND SNOWPLOW MARKERS SHALL BE ATTACHED TO POSTS AND BRACKETS USING VANDAL RESISTANT FASTENERS. THE FASTENERS SHALL BE ALUMINUM ALLOY 6061-T6 OR 2024-T4.

9. BRACKETS SHALL BE ATTACHED TO GUIDE RAIL, BRIDGE RAIL, MEDIAN RAIL, AND MEDIAN BARRIER USING BOLTS, BLIND LOCK BOLTS, SELF-TAPPING SCREWS, EXPANDING ANCHOR BOLTS, ETC. MADE OF STAINLESS STEEL, GALVANIZED STEEL, OR ALUMINUM ALLOY 6061-T6 OR 2024-T4.

10. ALUMINUM HARDWARE OF 2024-T4 SHALL BE ALCLAD OR FINISHED WITH TYPE 206 FINISH IN ACCORDANCE WITH THE SPECIFICATIONS OF ALUMINUM ANODIC COATINGS.

DELINEATORS AND SNOWPLOWING MARKERS

11. ON ROADWAY SECTIONS WITHOUT GUIDE RAIL, RIGHT SIDE DELINEATORS SHALL BE INSTALLED 2'-0" OUTSIDE THE USABLE RIGHT SHOULDER AND LEFT SIDE DELINEATORS SHALL BE INSTALLED 2 TO 8 FEET FROM THE LEFT EDGE OF SHOULDER. (REFER TO TABLE ON DMM-1.) WHERE THERE IS A CHANGE IN SHOULDER WIDTH, THE TRANSITION IN DELINEATOR PLACEMENT SHALL BE MADE GRADUALLY.

12. ON ROADWAY SECTIONS HAVING GUIDE RAIL, DELINEATORS AND SNOWPLOW MARKERS SHALL BE INSTALLED IMMEDIATELY BEHIND THE GUIDE RAIL AND BEHIND THE FRONT FACE OF THE END TREATMENT. WHERE THERE IS A CHANGE IN THE GUIDE RAIL LATERAL OFFSET, THE TRANSITION IN DELINEATOR PLACEMENT SHALL BE MADE GRADUALLY.

POST ERECTION

13. POSTS MAY EITHER BE DRIVEN OR SET. POSTS SHALL BE ERECTED TO PROVIDE THE PROPER LOCATION, LINE AND GRADE, AND TRUE VERTICAL ALIGNMENT OF THE MARKERS AND/OR DELINEATORS.

14. FOR POSTS THAT ARE DRIVEN, HAND OR MECHANICAL DEVICES MAY BE USED. A SUITABLE DRIVING CAP SHALL ALSO BE USED TO PREVENT EXCESSIVE DAMAGE TO THE TOP OF THE POSTS. AFTER DRIVING, THE TOP OF THE POSTS SHALL HAVE SUBSTANTIALLY THE SAME CROSS-SECTIONAL DIMENSIONS AS THE BODY OF THE POSTS. NO BATTERED HEADS WILL BE ACCEPTED. POSTS THAT ARE BENT OR OTHERWISE DAMAGED TO THE EXTENT THAT, IN THE OPINION OF THE ENGINEER, THEY ARE UNFIT FOR USE IN THE FINISHED WORK SHALL BE REMOVED FROM THE SITE AND REPLACED BY THE CONTRACTOR AT HIS/HER OWN EXPENSE.

15. FOR POSTS THAT ARE SET, HOLES SHALL BE DUG TO THE FULL EMBEDMENT DEPTH SHOWN ON THE PLANS. AFTER SETTING THE POSTS AT THE FULL EMBEDMENT DEPTH, THE HOLES SHALL BE BACKFILLED WITH SUITABLE MATERIAL PLACED IN LAYERS OF NOT MORE THAN 6 INCHES IN DEPTH. EACH LAYER SHALL BE THOROUGHLY COMPACTED. CARE SHALL BE TAKEN DURING COMPACTION TO PRESERVE THE ALIGNMENT OF THE POST.

16. WHEN SOUND ROCK IS ENCOUNTERED, POSTS SHALL BE FOUNDED A MINIMUM OF 12 INCHES INTO SOUND ROCK. COST SHALL BE INCLUDED IN THE APPROPRIATE MARKER OR DELINEATOR ITEM.

17. FOR POSTS THAT ARE INSTALLED IN PAVED AREAS, SODDED AREAS, SIDEWALKS, ETC., DISTURBED AREAS SHALL BE RESTORED IN-KIND.

NEW YORK STATE OF OPPORTUNITY. Thruway Authority

U.S. CUSTOMARY STANDARD SHEET

REFERENCE MARKER DETAILS
(SHEET 2 OF 2)

APPROVED SEPTEMBER 21, 2016

/S/ PATRICK THOMPSON, P.E.
DIRECTOR DESIGN SUPPORT
SERVICES BUREAU

ISSUED UNDER EI 16-001

TA 646-01

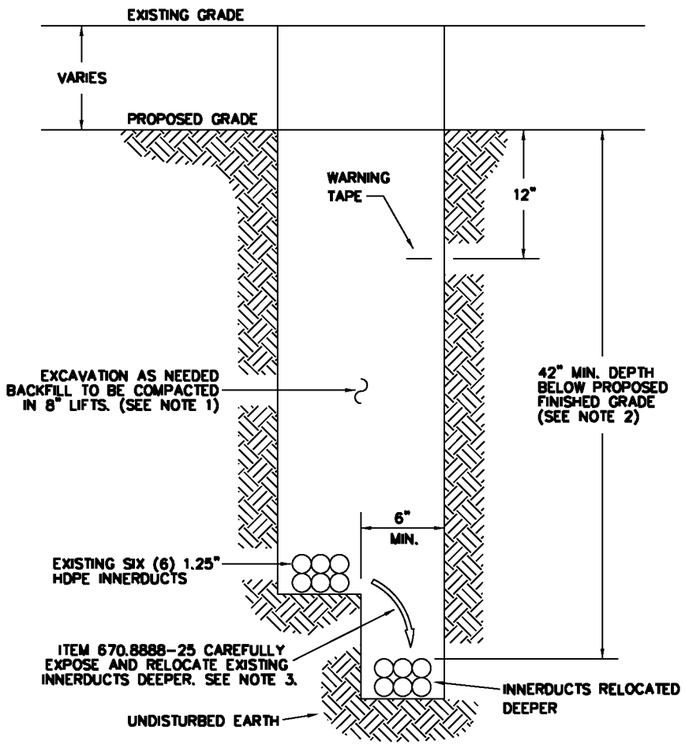

TYPICAL FIBER OPTIC VERTICAL RELOCATION
ITEM 670.8888--25
NOT TO SCALE

NOTES:

1. BACKFILL WILL BE EARTH WHICH IS REMOVED FROM DITCH FREE FROM DEBRIS, CINDERS AND ROCKS MEASURING 4 INCHES OR GREATER ACROSS THEIR LARGEST DIMENSION.
2. CONTRACTOR SHALL RELOCATE THE FIBER OPTIC LINES DEEPER AS NEEDED TO MAINTAIN A MINIMUM 42" COVER DEPTH BELOW PROPOSED FINAL GRADE.
3. CONTRACTOR MUST BE PREPARED TO INCREASE THE LENGTH OF INNERDUCT WITH COMPATIBLE SPLIT DUCT WHICH MUST BE SUBMITTED FOR ENGINEER'S APPROVAL. ASSUME ADEQUATE FIBER SLACK IS AVAILABLE FOR RELOCATION AND EXTENSION IF REQUIRED.

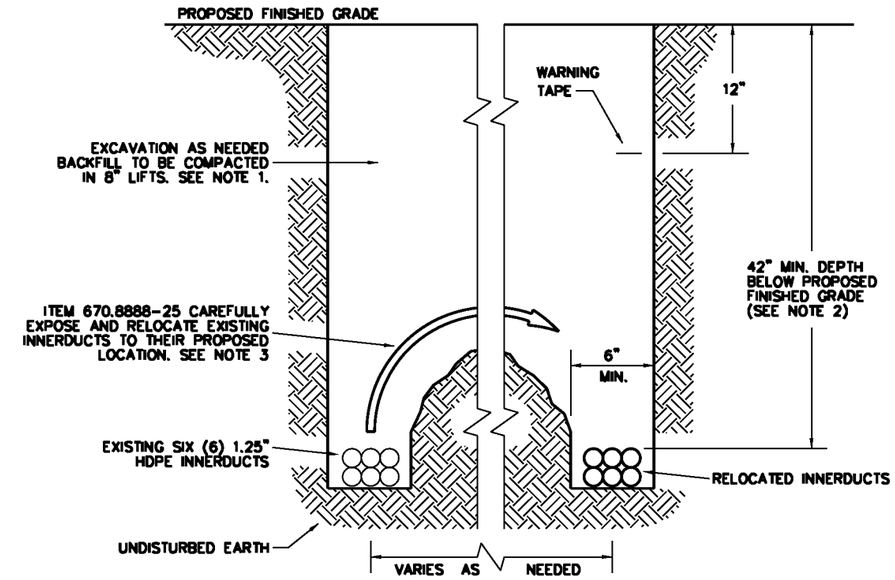

TYPICAL FIBER OPTIC HORIZONTAL RELOCATION
ITEM 670.8888--25
NOT TO SCALE

NOTES:

1. BACKFILL WILL BE EARTH WHICH IS REMOVED FROM DITCH FREE FROM DEBRIS, CINDERS AND ROCKS MEASURING 4 INCHES OR GREATER ACROSS THEIR LARGEST DIMENSION.
2. CONTRACTOR SHALL RELOCATE THE FIBER OPTIC LINES HORIZONTALLY AS NEEDED WHILE MAINTAINING A MINIMUM 42" COVER DEPTH BELOW PROPOSED FINAL GRADE.
3. CONTRACTOR MUST BE PREPARED TO INCREASE THE LENGTH OF INNERDUCT WITH COMPATIBLE SPLIT DUCT WHICH MUST BE SUBMITTED FOR ENGINEER'S APPROVAL. ASSUME ADEQUATE FIBER SLACK IS AVAILABLE FOR RELOCATION AND EXTENSION IF REQUIRED.

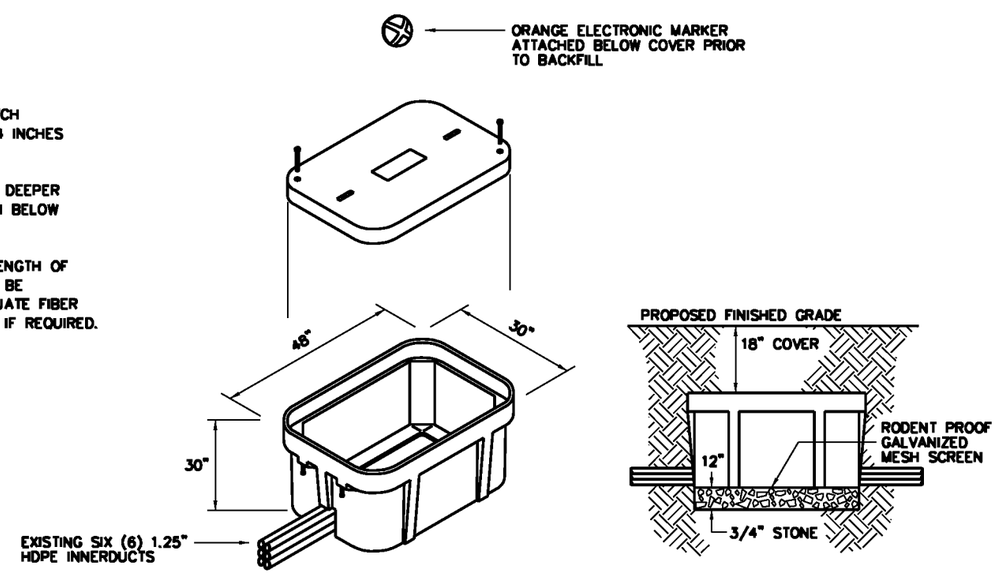

TYPICAL BACKBONE HANDHOLE RELOCATION
USE ITEM 680.5110--25 - PULLBOX C
NOT TO SCALE

NEW YORK STATE OF OPPORTUNITY. Thruway Authority

U.S. CUSTOMARY STANDARD SHEET

FIBER OPTIC RELOCATION AND BACKBONE HANDHOLE RELOCATION DETAILS

APPROVED JULY 1, 2017

/S/ PATRICK THOMPSON, P.E.
DIRECTOR DESIGN SUPPORT SERVICES BUREAU

ISSUED UNDER DB 17-001

TA 670-01

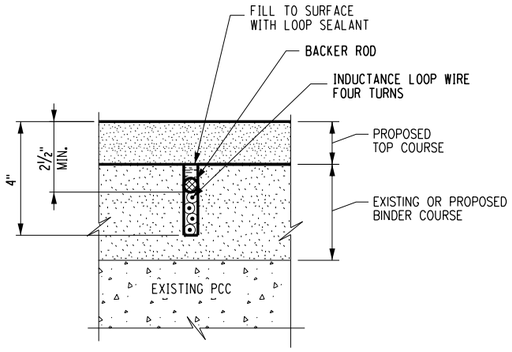

NOTE:
SAWCUTTING AND LOOP WIRE INSTALLATION SHALL BE COMPLETED PRIOR TO TOP COURSE PAVING.

SECTION VIEW
INDUCTANCE LOOP WIRE INSTALLATION
(ASPHALT PAVEMENT CUT-IN APPLICATION)

N.T.S.

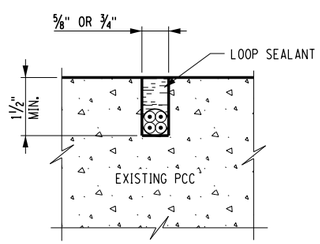

SECTION VIEW
PREFORMED INDUCTANCE LOOP INSTALLATION
(PCC CUT-IN APPLICATION)

N.T.S.

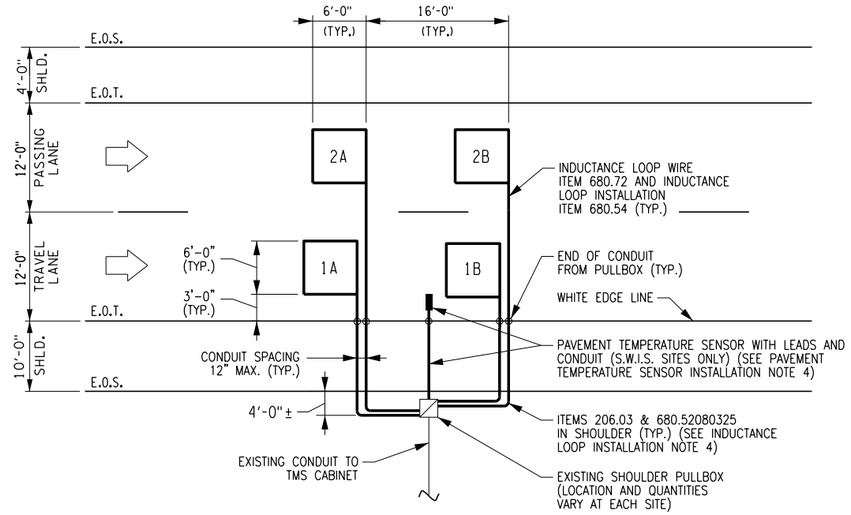

INDUCTANCE LOOPS - 2-LANE PLAN

N.T.S.

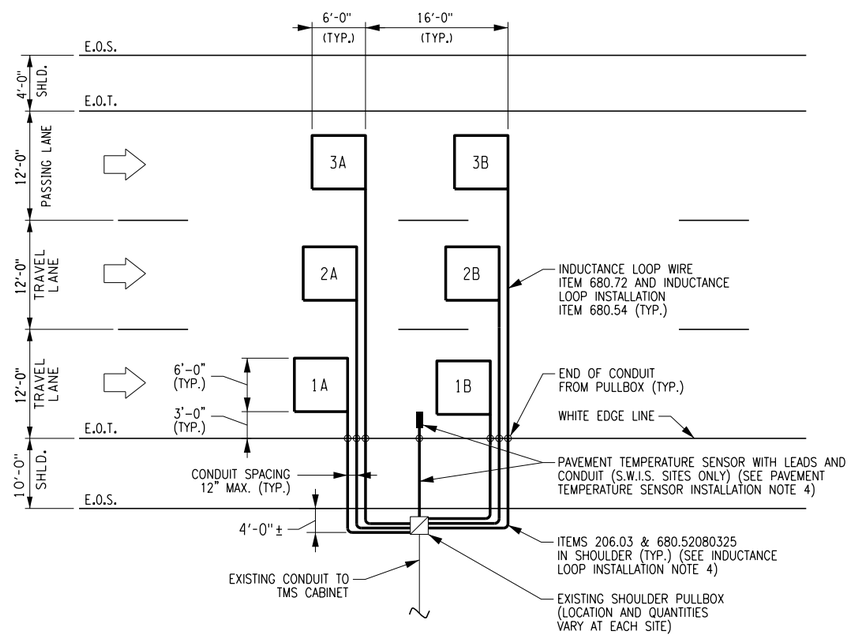

INDUCTANCE LOOPS - 3-LANE PLAN

N.T.S.

INDUCTANCE LOOP INSTALLATION NOTES:

1. EXISTING PULLBOXES, TMS CABINETS, FOUNDATIONS AND CABLES FROM THE PULLBOX(ES) TO THE CABINET(S) ARE ASSUMED TO BE IN SATISFACTORY CONDITION AND ARE TO REMAIN.
2. REFER TO NYSDOT STANDARD SHEETS 680-04 AND 680-14. IF A CONFLICT EXISTS BETWEEN THE DETAILS ON THIS PLAN SHEET AND THE PROVISIONS OF THE STANDARD SHEETS, THE DETAILS ON THIS PLAN SHEET SHALL PREVAIL.
3. PRIOR TO PAVING TOP COURSE, SAWCUT SLOTS IN BINDER COURSE AND INSTALL INDUCTANCE LOOPS ACCORDING TO THE CONTRACT DOCUMENTS. EXACT LOCATION SHALL BE DETERMINED BY THE ENGINEER.
4. IF EXISTING CONDUIT IN SHOULDER CANNOT BE REUSED, SAWCUT SLOTS IN SHOULDER PAVEMENT AND INSTALL NEW 1-INCH FLEXIBLE LIQUIDTIGHT PVC CONDUIT FROM THE EDGE OF THE RIGHT TRAVEL LANE TO THE EDGE OF SHOULDER. THE COST FOR THIS WORK WILL BE PAID UNDER ITEMS 680.54 AND 680.52080325. EXCAVATE FROM EDGE OF SHOULDER TO EXISTING PULLBOX, INSTALL NEW CONDUIT AND BACKFILL. THE COST FOR THIS WORK WILL BE PAID UNDER ITEMS 206.03 AND 680.52080325.
5. HOLES MAY BE DRILLED IN THE PULLBOX TO ACCOMMODATE THE INSTALLATION OF NEW CONDUIT. ALL PENETRATIONS SHALL BE SEALED ACCORDING TO THE NYSDOT STANDARD SHEETS. THE COST FOR THIS WORK SHALL BE INCLUDED IN ITEM 206.03.
6. THE INDUCTANCE LOOP WIRES SHALL BE SOLDERED TO THE SHIELDED LEAD-IN CABLES BEFORE WATERPROOFING. MECHANICAL CONNECTIONS WILL NOT BE ACCEPTED.
7. THE CONTRACTOR SHALL IDENTIFY THE INDUCTANCE LOOP WIRES BY PLACING WATERPROOF TAGS ON THE LEAD-IN CABLES INSIDE THE PULLBOXES. A WIRING DIAGRAM SHALL ALSO BE PROVIDED IN THE TMS CABINET. THE COST FOR THIS WORK SHALL BE INCLUDED IN ITEM 680.72.
8. THE CONTRACTOR SHALL NOTIFY THE DIVISION ITSM SUPERVISOR AT LEAST TWO DAYS PRIOR TO PAVEMENT WORK IN THE VICINITY OF THE INDUCTANCE LOOPS IN ORDER TO DISCONNECT AND PREVENT DAMAGE TO THE TRAFFIC CLASSIFIER.
9. THE CONTRACTOR SHALL NOTIFY THE DIVISION ITSM SUPERVISOR AT LEAST TEN WORKING DAYS PRIOR TO FINAL INSPECTION OF THE INDUCTANCE LOOP INSTALLATIONS.

PAVEMENT TEMPERATURE SENSOR INSTALLATION NOTES (S.W.I.S. SITES ONLY):

1. THE PAVEMENT TEMPERATURE SENSOR FOR SEASONAL WEATHER INFORMATION SYSTEM (S.W.I.S.) SITES WILL BE SUPPLIED BY THE AUTHORITY. THE ENGINEER SHALL NOTIFY THE DIVISION ITSM SUPERVISOR ONE WEEK IN ADVANCE OF THE INTENDED INSTALLATION.
2. THE PAVEMENT TEMPERATURE SENSOR SHALL BE INSTALLED 16 TO 17 1/2 INCHES INSIDE THE EDGE OF THE RIGHT TRAVEL LANE (WHITE EDGE LINE). EXACT LOCATION SHALL BE DETERMINED BY THE ENGINEER.
3. THE SAWCUT FOR THE SENSOR LEAD-IN CABLES SHALL BE 2 1/2 INCHES DEEP. THE SAWCUT FOR THE SENSOR SHALL BE 1 INCH WIDE BY 4 INCHES LONG BY 2 1/2 INCHES DEEP. THE SENSOR SHALL BE INSTALLED 1 INCH BELOW THE TOP SURFACE OF THE ROADWAY.
4. IF EXISTING CONDUIT IN SHOULDER CANNOT BE REUSED, SAWCUT SLOTS IN SHOULDER PAVEMENT AND INSTALL NEW 1-INCH FLEXIBLE LIQUIDTIGHT PVC CONDUIT FROM THE EDGE OF THE RIGHT TRAVEL LANE TO THE EDGE OF SHOULDER. THE COST FOR THIS WORK WILL BE PAID UNDER ITEMS 680.54 AND 680.52080325. EXCAVATE FROM EDGE OF SHOULDER TO EXISTING PULLBOX, INSTALL NEW CONDUIT AND BACKFILL. THE COST FOR THIS WORK WILL BE PAID UNDER ITEMS 206.03 AND 680.52080325.
5. THE SENSOR WIRE SHALL BE INSTALLED IN THE SAWCUT AND PULLED THROUGH THE CONDUIT. THE REMAINING END OF THE WIRE SHALL BE COILED IN THE PULLBOX OR TMS CABINET, A.O.B.E.

NEW YORK STATE OF OPPORTUNITY. | Thruway Authority

U.S. CUSTOMARY STANDARD SHEET

INDUCTANCE LOOP INSTALLATION
(DRAWING TMS)

APPROVED MAY 1, 2018	ISSUED UNDER DB 18-001
/S/ PATRICK THOMPSON, P.E. DIRECTOR DESIGN SUPPORT SERVICES BUREAU	**TA 680-01**

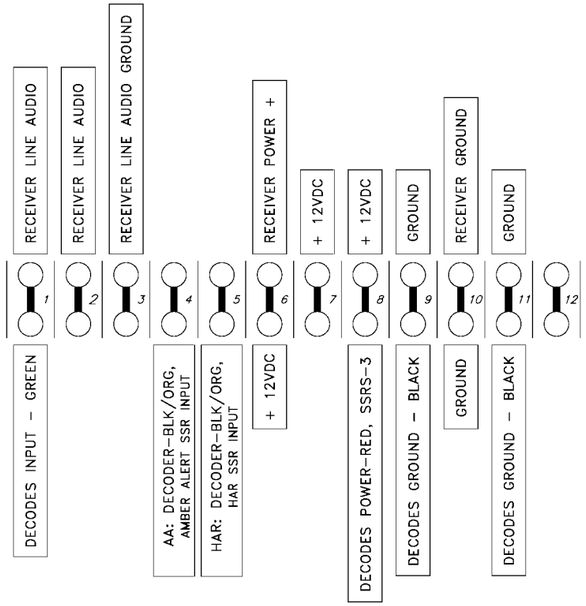

TS1 – TERMINAL STRIP 1

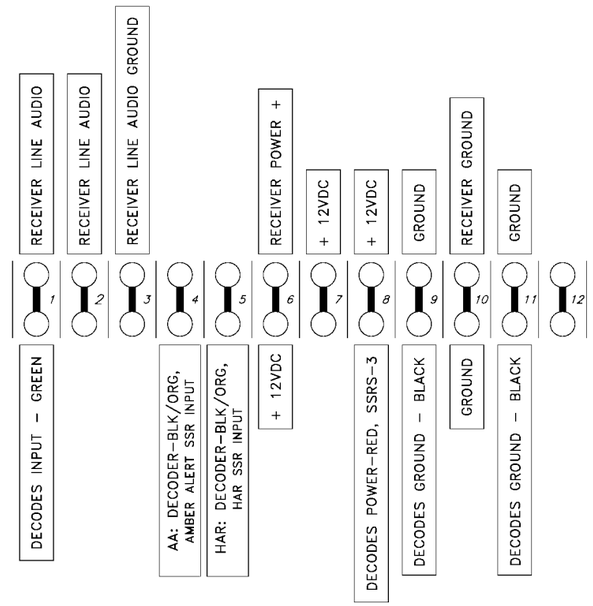

TS1 – TERMINAL STRIP 1

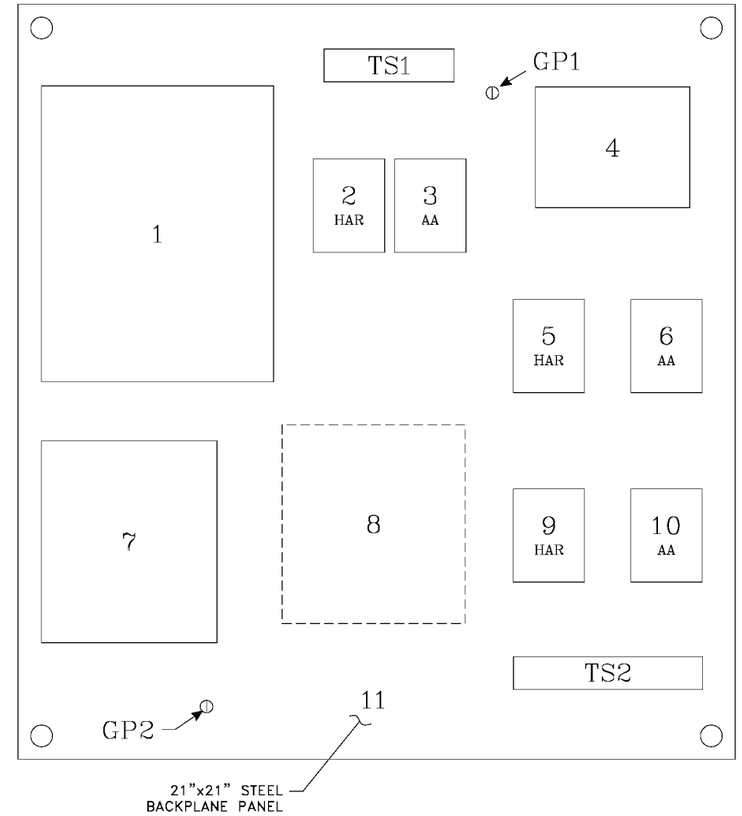

SIGN CONTROL BACKPLANE

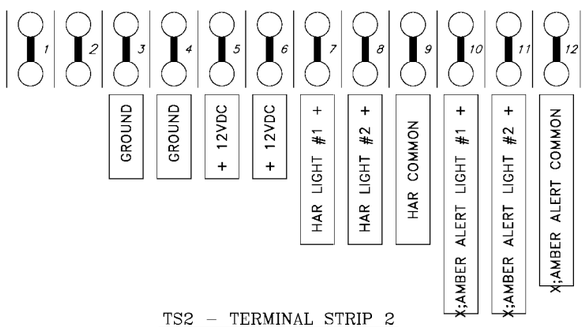

TS2 – TERMINAL STRIP 2

AC OPTION

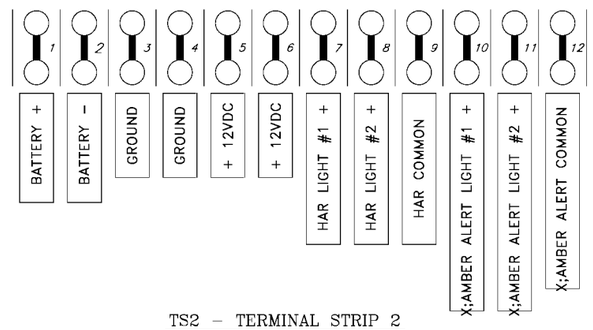

TS2 – TERMINAL STRIP 2

SOLAR OPTION

TERMINAL STRIP CONNECTIONS

COMPONENTS:

1	–	AM RECEIVER/MONITOR
2 & 3	–	DECODERS (HAR = HIGHWAY ADVISORY RADIO; AA = AMBER ALERT)
4	–	EXTENSION SPEAKER
5 & 6	–	DC SOLID STATE RELAYS
7	–	SOLAR CHARGER REGULATOR OR AC POWER SUPPLY
8	–	LOCATION RESERVED FOR CELL PHONE & POWER SUPPLY
9 & 10	–	SOLID STATE FLASHERS
11	–	BACKPLANE PANEL
TS1 & TS2	–	TERMINAL STRIPS
GP1 & GP2	–	GROUNDING POSTS

NOTES:

1. TO FASTEN COMPONENTS TO BACKPLANE PANEL, USE A 1-INCH WIDE RECLOSABLE FASTENING SYSTEM WITH HIGH STRENGTH ADHESIVE BACKING.
2. SEE TABLES, DIAGRAMS AND SPECIAL NOTE ON STANDARD SHEET TA 680-02 (DWG. SC-2) FOR DETAILS.

NEW YORK STATE OF OPPORTUNITY. | Thruway Authority

U.S. CUSTOMARY STANDARD SHEET

HAR SYSTEM
SIGN CONTROL BACKPLANE
(DRAWING SC-1)
SHEET 1 OF 9

APPROVED SEPTEMBER 21, 2016

/S/ PATRICK THOMPSON, P.E.
DIRECTOR DESIGN SUPPORT SERVICES BUREAU

ISSUED UNDER EI 16-001

TA_680-02

COMPONENTS
OF SIGN CONTROL BACKPLANE

NO.	DESCRIPTION
1	AM RECEIVER/MONITOR • TUNING RANGE: 530 TO 1750 KHz, SELECTABLE BY DIP SWITCH. • TUNING CONTROL BY PHASE LOCK LOOP. • AUDIO OUTPUTS: ONE 600-OHM LINE OUT AND ONE 8-OHM SPEAKER OUT. • INTERNAL VOLTAGE REGULATION. • SENSITIVITY: 7 MICROVOLT WITH 30% MODULATION, 20dB SIGNAL/NOISE.
2 & 3	DECODERS • DTMF DECODERS FOR USE OVER VOICE-GRADE CIRCUITS. • INPUT SENSITIVITY OF 10 MILLIVOLTS RMS, SIGNAL TO NOISE RATIO OF 12dB. • DECODE MOMENTARY OUTPUT: OPEN COLLECTOR CAPABLE OF SINKING 80 MILLIAMPS. • DECODE MOMENTARY OUTPUT TIMING: ADJUSTABLE RANGE THAT INCLUDES 300 SECONDS. • CONTROLLABLE OVER-LENGTH SEQUENCE ACCEPT OR REJECT.
4	EXTENSION SPEAKER • 8-OHM IMPEDANCE, MINIMUM 1 WATT WITH FREQUENCY RESPONSE OF 300 – 3000 Hz. • ELECTRICAL CONNECTION BY ZIP CORD PRE-ATTACHED TO + AND – SPEAKER CONTACTS. • MINIMUM LENGTH OF ZIP CORD: 2 FEET.
5 & 6	DC SOLID STATE RELAYS • RATED LOAD: 10-AMP AT 60 VOLTS DC. • OUTPUT VOLTAGE RANGE: 3 TO 60 VOLTS DC. • INPUT VOLTAGE RANGE: 3 TO 32 VOLTS DC. • LED STATUS INDICATOR. • 4000 VOLTS AC OPTICAL ISOLATION. • NON-EMITTER OF ELECTRO-MAGNETIC NOISE. • UL RECOGNIZED.
7	SOLAR CHARGER REGULATOR FOR SOLAR OPTION • RATED SOLAR AND LOAD CURRENT: 15 AMPS. • 12-VOLT LOAD VOLTAGE WITH TEMPERATURE COMPENSATION. • BATTERY CHARGING; HIGH VOLTAGE AND TEMPERATURE DISCONNECT. • PROTECTION AGAINST: SHORT CIRCUIT, OVERLOAD, TRANSIENT SURGES, VOLTAGE SPIKES. OR AC POWER SUPPLY FOR AC OPTION • 12-VOLT DC LINEAR REGULATED SOLID STATE POWER SUPPLY, FUSE PROTECTED. • FOLD-BACK CURRENT-LIMITING PROTECTION; CROWBAR OVERVOLTAGE PROTECTION. • INPUT VOLTAGE RANGE: 105 TO 125 VOLTS AC. • OUTPUT VOLTAGE RANGE: 12 VOLT DC ±10% WITH LESS THAN 5 MILLIVOLT PEAK TO PEAK RIPPLE.
8	LOCATION RESERVED FOR CELL PHONE AND CELL PHONE POWER SUPPLY.
9 & 10	SOLID STATE FLASHERS, ALTERNATING OUTPUT • INPUT VOLTAGE: 12 VOLTS DC • OUTPUT CURRENT: 10 AMPS • ALTERNATING OUTPUT CAPABLE OF DRIVING TWO INDEPENDENT LOADS. • 50% DUTY CYCLE. • NON-EMITTER OF ELECTRO-MAGNETIC NOISE. • FIXED FLASH RATE OF 60 FLASHES PER MINUTE.
11	BACKPLANE PANEL • PAINTED, 12-GAUGE STEEL PANEL 21"x21"
TS1 & TS2	TERMINAL STRIPS: BARRIER TYPE TERMINAL STRIPS • BARRIER TYPE WITH JUMPERS; SCREW SIZE 5-40.
GP1 & GP2	GROUNDING POSTS: • SEE GROUNDING POST DIAGRAM FOR DETAILS.

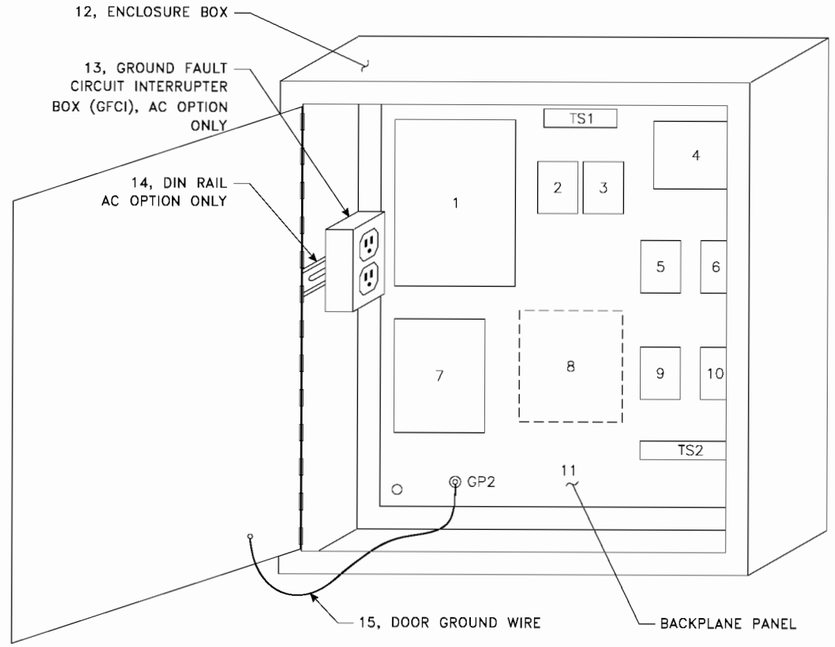

ENCLOSURE BOX

COMPONENTS
OF ENCLOSURE BOX

NO.	DESCRIPTION
12	ENCLOSURE BOX • 14-GAUGE, STAINLESS STEEL BOX, TYPE 316L, 24"x24"x8"
13	GROUND FAULT CIRCUIT INTERRUPTER BOX, GFCI FOR AC OPTION ONLY • 120 V, 15 AMP CIRCUIT BOX, 2.406" HIGH X 2.37" WIDE X 5.366" DEEP
14	DIN 35 CARRIER RAIL FOR AC OPTION ONLY • 5" IN LENGTH, MOUNTED WITH: TWO STAINLESS STEEL SCREWS, 1/4"-20 BY 1/2" LENGTH AND TWO STAINLESS STEEL FLANGE NUTS, 1/4"-20
15	DOOR GROUND WIRE • 12AWG, STRANDED, GREEN, 1 1/2 FEET LONG • SPADE BOTH ENDS; FIT ONE END TO 1/4" STUD ON DOOR AND OTHER END TO # 10 NUT OF GROUNDING POST GP2.

SPECIAL NOTE:

FOR ADDITIONAL DETAILS AND SUGGESTIONS ON CURRENT SUPPLY SOURCES FOR THE ITEMS NOTED ABOVE, CONTACT THE NYS THRUWAY AUTHORITY INFORMATION TECHNOLOGY/TECHNOLOGY DEVELOPMENT OFFICE.

UNLESS OTHERWISE NOTED ALL LABOR, MATERIALS, TOOLS, EQUIPMENT AND INCIDENTALS AS NECESSARY TO COMPLETE THE WORK ASSOCIATED WITH INSTALLATION OF SIGN CONTROL FOR A HIGHWAY ADVISORY RADIO, INCLUDING THE ENCLOSURE BOX CONTAINING THE SIGN CONTROL BACKPLANE WITH ALL REQUIRED COMPONENTS, A WHIP OR LOOP ANTENNA AND THE EXTERNAL CONNECTIONS, SHALL BE INCLUDED IN THE PRICE BID FOR EITHER
ITEM 25680.990010, HIGHWAY ADVISORY RADIO (HAR) SIGN CONTROL (AC WIRING) OR
ITEM 25680.990011, HIGHWAY ADVISORY RADIO (HAR) SIGN CONTROL (SOLAR WIRING).

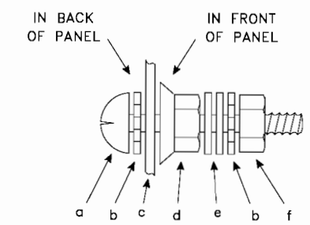

a) PHILLIPS SCREW 10-32x3/4"
b) STAR WASHER
c) SIGN CONTROL PANEL
d) FLANGE NUT
e) FLAT WASHERS (2 REQUIRED)
f) 10-32 NUT

GROUNDING POST

NOTES:

1. GP1 FOR GROUNDING EQUIPMENT TO PANEL.
2. GP2 FOR GROUNDING PANEL TO EARTH.
3. USE STAINLESS STEEL.
4. REMOVE PAINT FROM PANEL AT GROUND POST FOR GOOD ELECTRICAL CONNECTION.
5. APPLY SEAL COMPOUND SUCH AS SILICONE TO PREVENT CORROSION.

U.S. CUSTOMARY STANDARD SHEET

HAR SYSTEM
SIGN CONTROL DETAILS
(DRAWING SC-2)
SHEET 2 OF 9

APPROVED SEPTEMBER 21, 2016

/S/ PATRICK THOMPSON, P.E.
DIRECTOR DESIGN SUPPORT SERVICES BUREAU

ISSUED UNDER EI 16-001

TA_680-02

KEY

AA = AMBER ALERT

HAR = HIGHWAY ADVISORY RADIO

NOTE:

WIG-WAG LIGHTS ARE 8-INCH, 12-VOLT, 9-WATT AMBER LED LIGHTS. FOUR ARE REQUIRED.

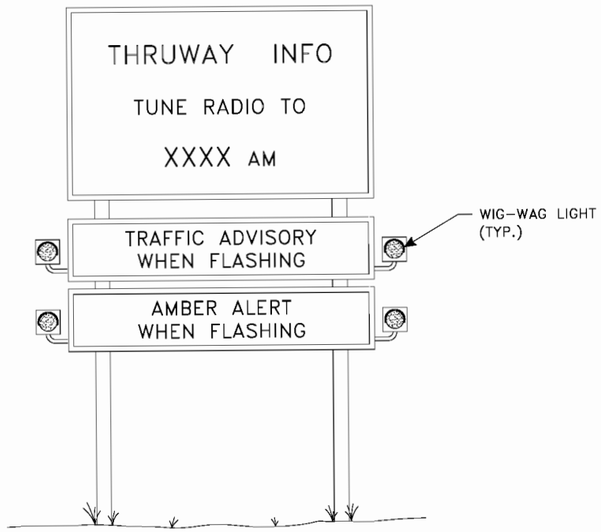

HAR/AA SIGN

SURGE PROTECTOR REQUIREMENTS:

- MAXIMUM SURGE CURRENT: 80KA (8/20µs)
- LINES PROTECTED: LINE TO NEUTRAL, LINE TO GROUND, LINE TO LINE & NEUTRAL TO GROUND.
- DUTY CYCLE PERFORMANCE (8/20µs):
  - 80KA – 1 IMPULSE
  - 10KA – > 4000 IMPULSES
  - 100A – INFINITE
- LONG DURATION CURRENT PULSE (10/1,000µs) CAPACITY: 3.6KA

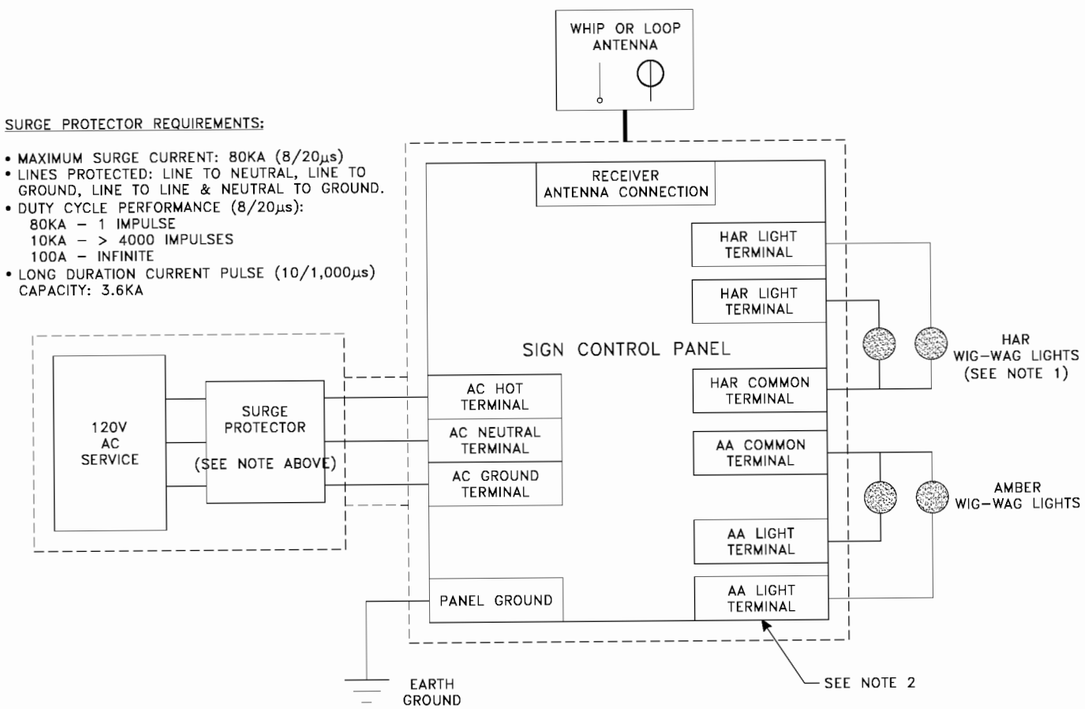

SIGN CONTROL PANEL – AC EXTERNAL CONNECTIONS

NOTES:

1. SEE DIAGRAM OF SIGN ABOVE FOR ACTUAL LOCATIONS OF WIG-WAG LIGHTS.
2. ALL LIGHT TERMINALS ARE ON TERMINAL STRIP 2.

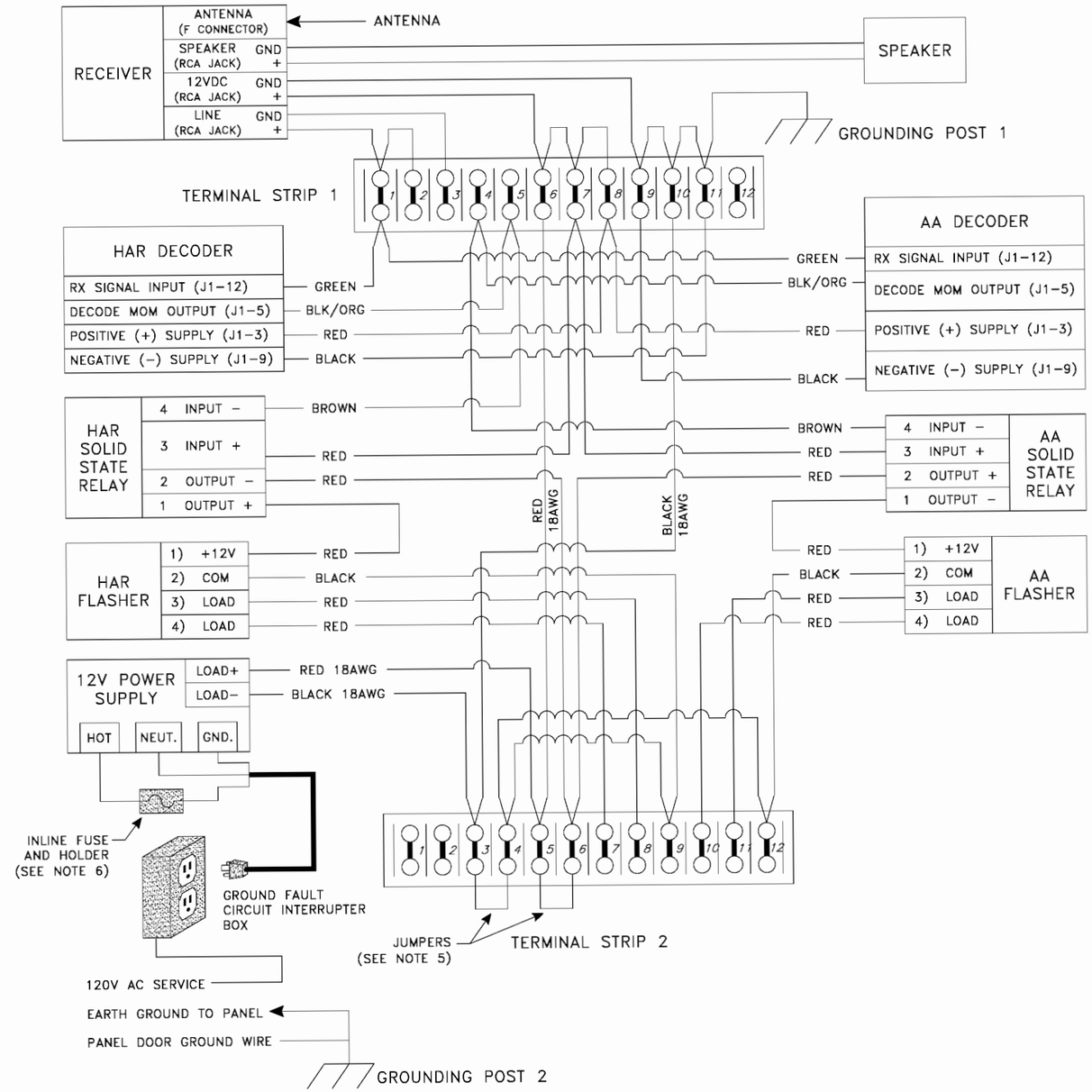

SIGN CONTROL PANEL – AC WIRING

NOTES:

1. ALL AC WIRES ARE 18AWG STRANDED.
2. ALL DC WIRES ARE 20AWG STRANDED, UNLESS IDENTIFIED OTHERWISE.
3. WIRE ENDS ARE TINNED.
4. SPADE CONNECTORS SHALL BE USED ON WIRES AT TERMINAL STRIPS.
5. JUMPERS ARE BARRIER STRIP JUMPER PLATES.
6. INLINE FUSE AND FUSE HOLDER ARE REQUIRED ONLY WHEN NOT PROVIDED IN THE POWER SUPPLY. NO FUSE IS REQUIRED WHEN USING THE RS-3A ASTON POWER SUPPLY. WHEN FUSE IS NEEDED, USE FUSE VALUE RECOMMENDED BY POWER SUPPLY MANUFACTURER.
7. ON STANDARD SHEET TA 680-03 (DWG. SC-2), SEE TABLES FOR PART NUMBERS AND DESCRIPTIONS AND SEE SPECIAL NOTE FOR DETAILS.

U.S. CUSTOMARY STANDARD SHEET

HAR/AA SYSTEM
SIGN CONTROL PANEL
AC WIRING
(DRAWING SC-3)
SHEET 3 OF 9

APPROVED SEPTEMBER 21, 2016

/S/ PATRICK THOMPSON, P.E.
DIRECTOR DESIGN SUPPORT SERVICES BUREAU

ISSUED UNDER EI 16-001

TA_680-02

KEY

AA = AMBER ALERT

HAR = HIGHWAY ADVISORY RADIO

NOTE:

WIG-WAG LIGHTS ARE 8-INCH, 12-VOLT, 9-WATT AMBER LED LIGHTS. FOUR ARE REQUIRED.

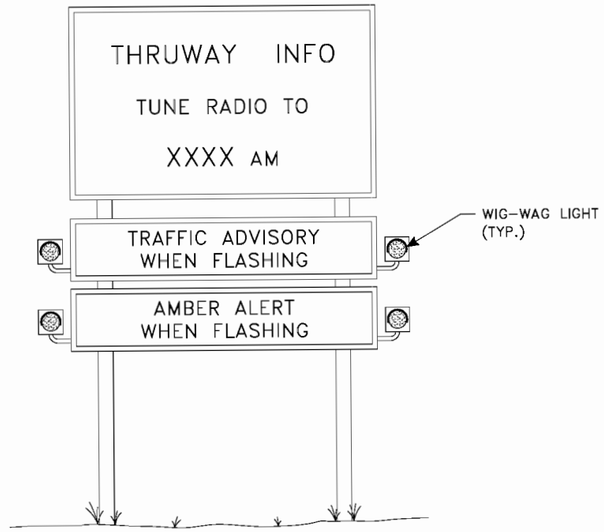

HAR/AA SIGN

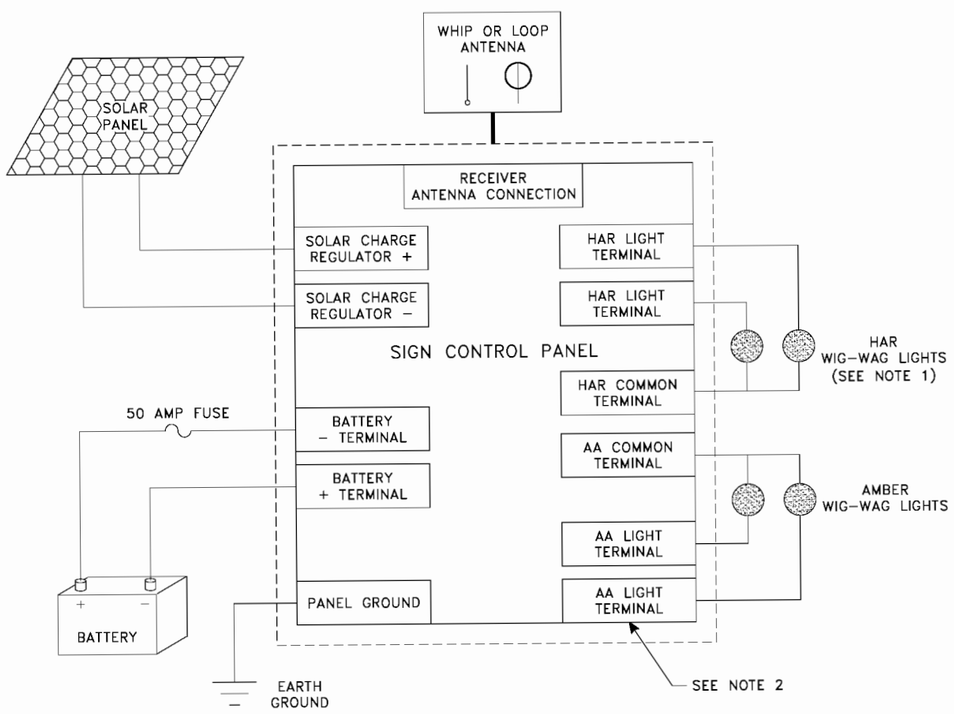

SIGN CONTROL PANEL – SOLAR EXTERNAL CONNECTIONS

NOTES:

1. SEE DIAGRAM OF SIGN ABOVE FOR ACTUAL LOCATIONS OF WIG-WAG LIGHTS.
2. ALL LIGHT TERMINALS ARE ON TERMINAL STRIP 2.

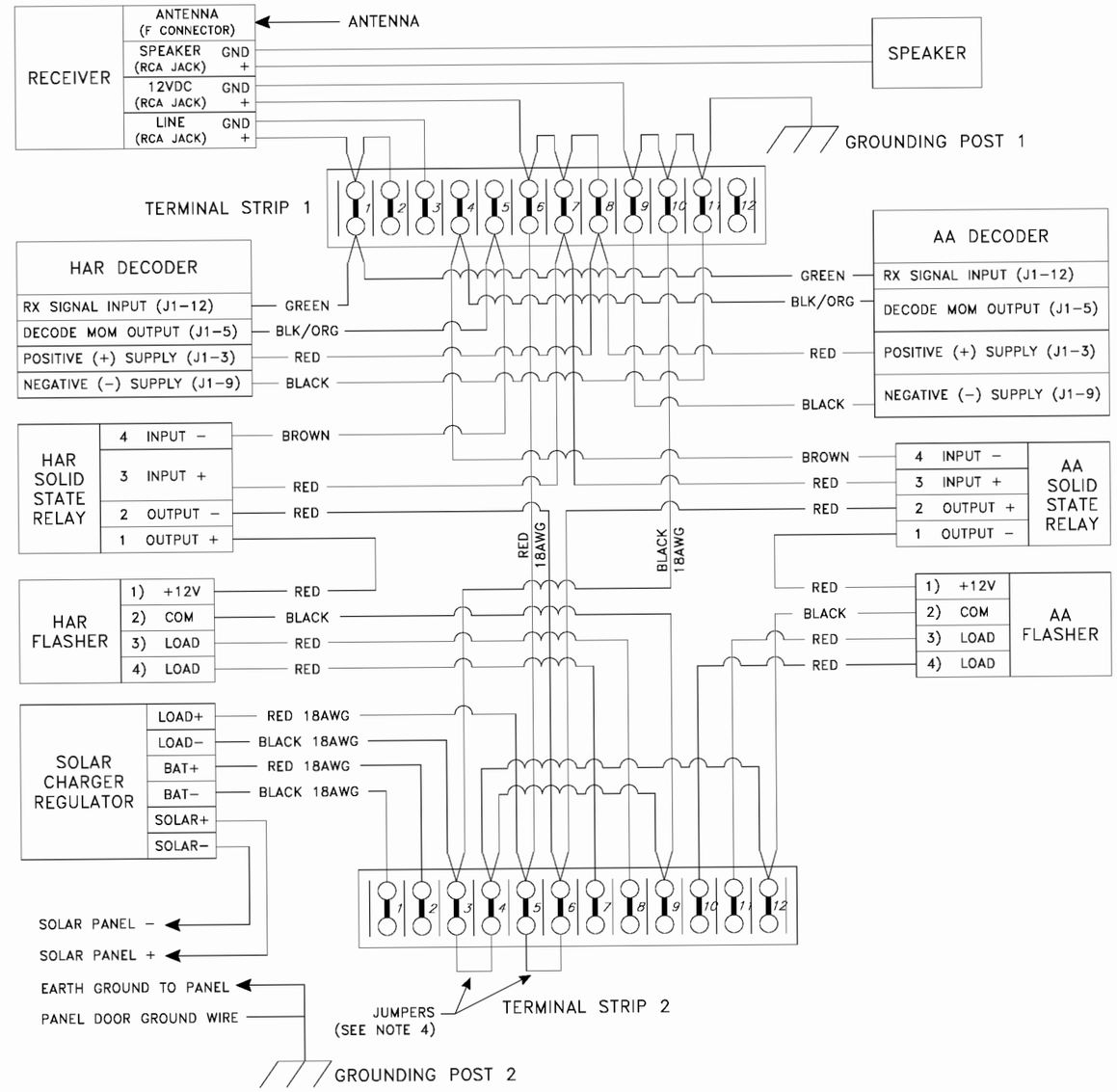

SIGN CONTROL PANEL – SOLAR WIRING

NOTES:

1. ALL DC WIRES ARE 20AWG STRANDED, UNLESS IDENTIFIED OTHERWISE.
2. WIRE ENDS ARE TINNED.
3. SPADE CONNECTORS SHALL BE USED ON WIRES AT TERMINAL STRIPS.
4. JUMPERS ARE BARRIER STRIP JUMPER PLATES.
5. ON STANDARD SHEET TA 680-03 (DWG. SC-2), SEE TABLES FOR PART NUMBERS AND DESCRIPTIONS AND SEE SPECIAL NOTE FOR DETAILS.

U.S. CUSTOMARY STANDARD SHEET

HAR/AA SYSTEM
SIGN CONTROL PANEL
SOLAR WIRING
(DRAWING SC-4)
SHEET 4 OF 9

APPROVED SEPTEMBER 21, 2016

/S/ PATRICK THOMPSON, P.E.
DIRECTOR DESIGN SUPPORT SERVICES BUREAU

ISSUED UNDER EI 16-001

TA_680-02

NOTES:

1. TO FASTEN COMPONENTS TO BACKPLANE PANEL, USE A 1-INCH WIDE RECLOSABLE FASTENING SYSTEM WITH HIGH STRENGTH ADHESIVE BACKING.
2. ALL COMPONENTS WITHIN THE CABINET ARE INCLUDED IN ITEM 680.9800--25, UNLESS OTHERWISE NOTED.
3. POWER DISTRIBUTION PANEL AND ITS MOUNTING INCLUDED UNDER ITEM 680.9800--25. MOUNTING POSTS FOR WHOLE ASSEMBLY ARE PAID FOR UNDER SEPARATE ITEM.

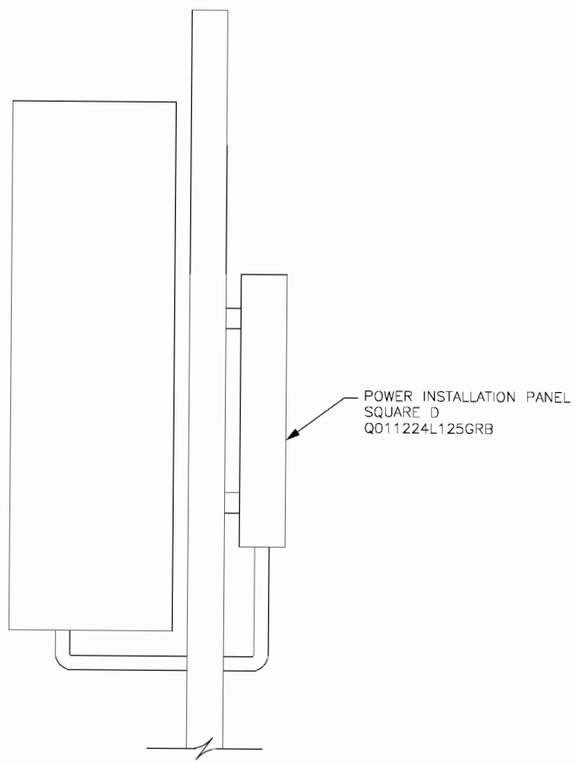

SIDE ELEVATION

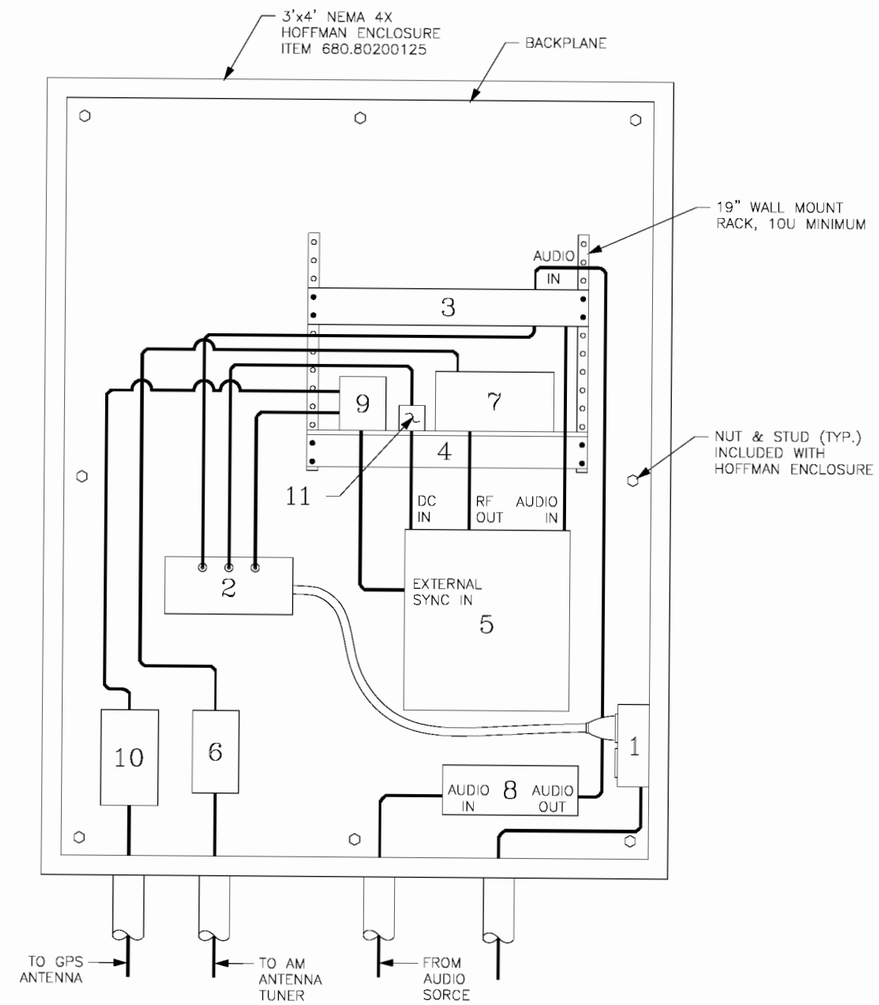

TRANSMITTER BACKPLANE

COMPONENTS:

1 – GFCI DUPLEX OUTLET
2 – POWER SUPPLY STRIP
3 – COMPRESSOR/LIMITER
4 – SHELF
5 – TRANSMITTER
6 – RF SURGE SUPPRESSOR
7 – STANDING WAVE RATIO METER
8 – SURGE PROTECTION FOR AUDIO SOURCE
9 – TIMING GPS
10 – GPS RF SURGE SUPPRESSOR
11 – TRANSMITTER POWER SUPPLY

NOTE:

1. TO FASTEN COMPONENTS TO BACKPLANE PANEL, USE A 1-INCH WIDE RECLOSABLE FASTENING SYSTEM WITH HIGH STRENGTH ADHESIVE BACKING.

U.S. CUSTOMARY STANDARD SHEET

HAR/AA SYSTEM
SYNCHRONIZED
TRANSMITTER CANINET
(DRAWING T-1)
DRAWING 5 OF 9

APPROVED SEPTEMBER 21, 2016

/S/ PATRICK THOMPSON, P.E.
DIRECTOR DESIGN SUPPORT
SERVICES BUREAU

ISSUED UNDER EI 16-001

TA_680-02

NOTES:

1. TO FASTEN COMPONENTS TO BACKPLANE PANEL, USE A 1-INCH WIDE RECLOSABLE FASTENING SYSTEM WITH HIGH STRENGTH ADHESIVE BACKING.
2. ALL COMPONENTS WITHIN THE CABINET ARE INCLUDED IN ITEM 680.9801--25, UNLESS OTHERWISE NOTED.
3. POWER DISTRIBUTION PANEL AND ITS MOUNTING INCLUDED UNDER ITEM 680.9801--25. MOUNTING POSTS FOR WHOLE ASSEMBLY ARE PAID FOR UNDER SEPARATE ITEM.

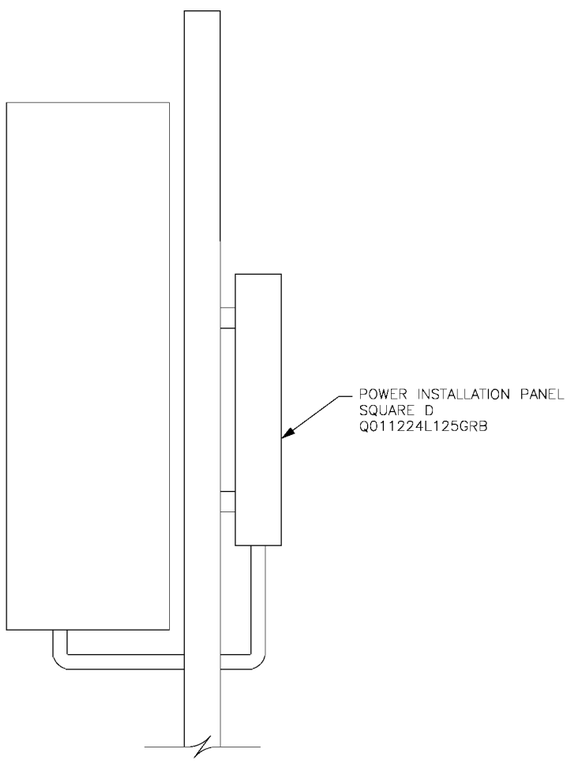

SIDE ELEVATION

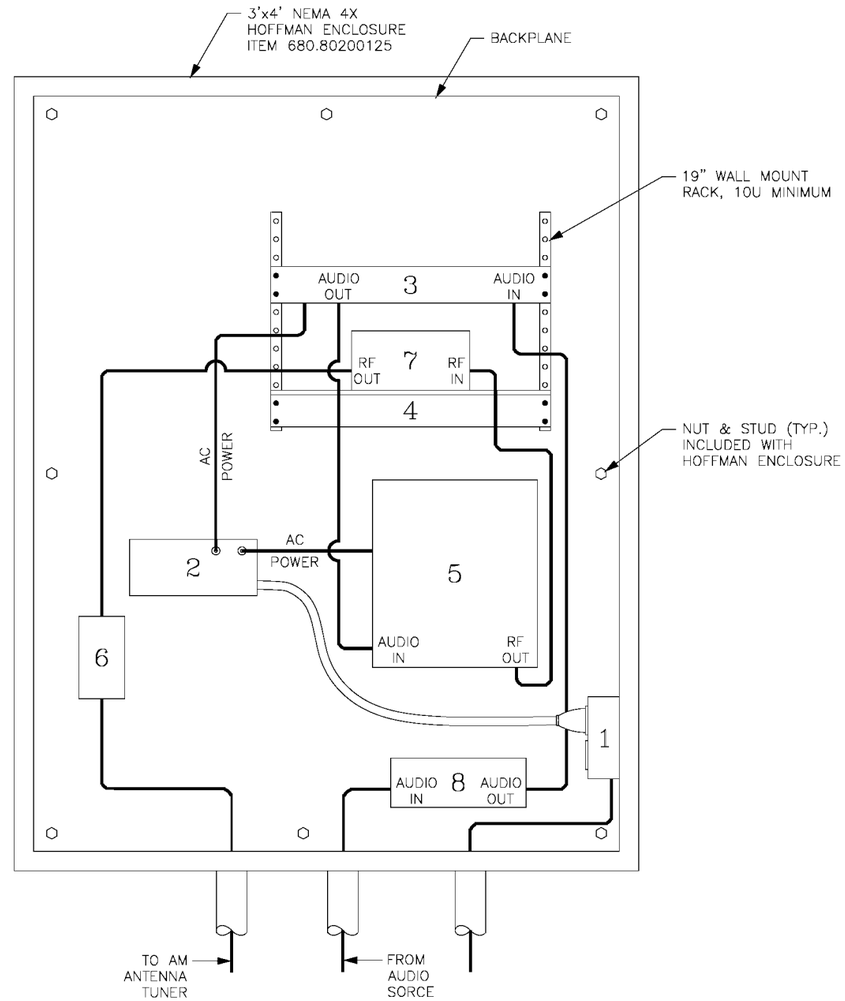

TRANSMITTER BACKPLANE

COMPONENTS:

1 - GFCI DUPLEX OUTLET
2 - POWER SUPPLY STRIP
3 - COMPRESSOR/LIMITER
4 - SHELF
5 - TRANSMITTER
6 - RF SURGE SUPPRESSOR
7 - STANDING WAVE RATIO METER
8 - SURGE PROTECTION FOR AUDIO SOURCE

NOTE:

1. TO FASTEN COMPONENTS TO BACKPLANE PANEL, USE A 1-INCH WIDE RECLOSABLE FASTENING SYSTEM WITH HIGH STRENGTH ADHESIVE BACKING.

NEW YORK STATE OF OPPORTUNITY. Thruway Authority

U.S. CUSTOMARY STANDARD SHEET

HAR/AA SYSTEM
SYNCHRONIZED
TRANSMITTER CABINET
(DRAWING T-2)
SHEET 6 OF 9

APPROVED SEPTEMBER 21, 2016

/S/ PATRICK THOMPSON, P.E.
DIRECTOR DESIGN SUPPORT
SERVICES BUREAU

ISSUED UNDER EI 16-001

TA 680-02

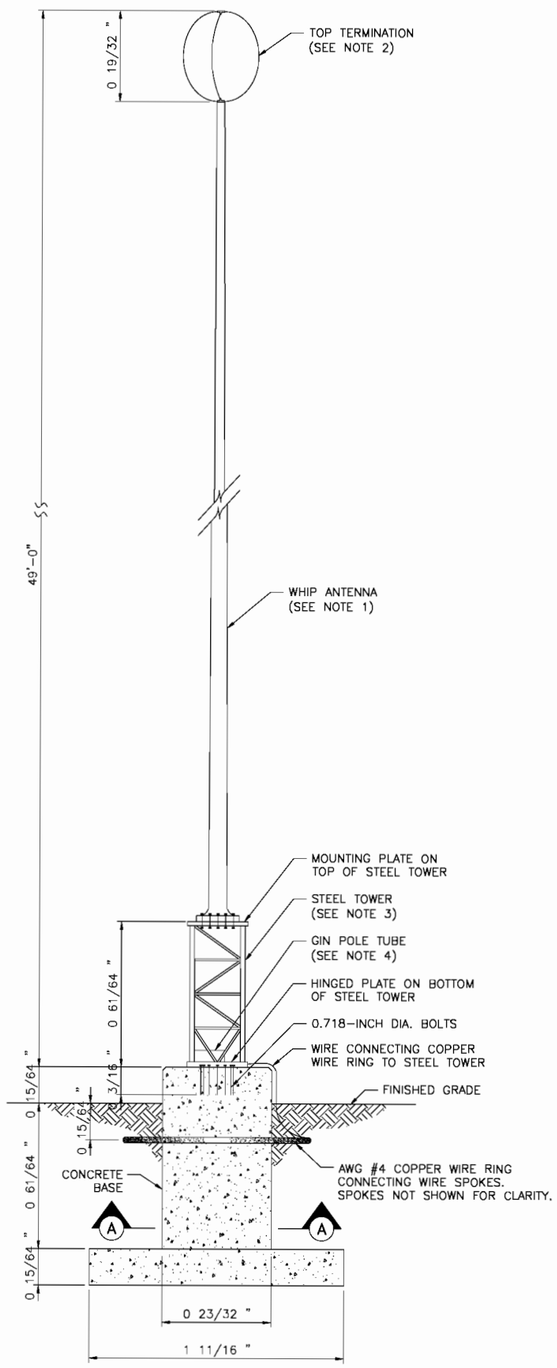

ELEVATION OF ANTENNA

(NTS)

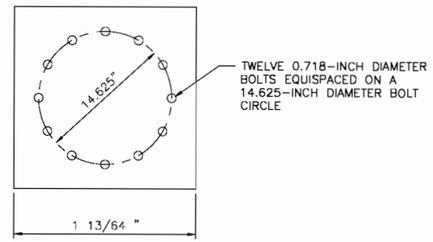

CONNECTION OF ANTENNA BASE TO MOUNTING PLATE ON TOP OF STEEL TOWER

(NTS)

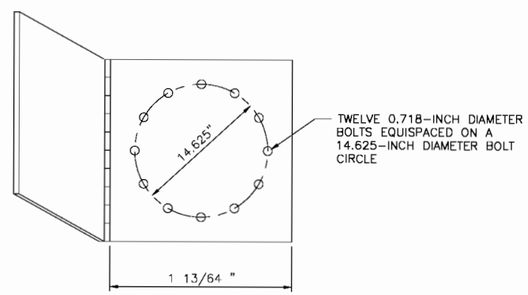

CONNECTION OF HINGED BOTTOM PLATE OF STEEL TOWER TO CONCRETE BASE

(NTS)

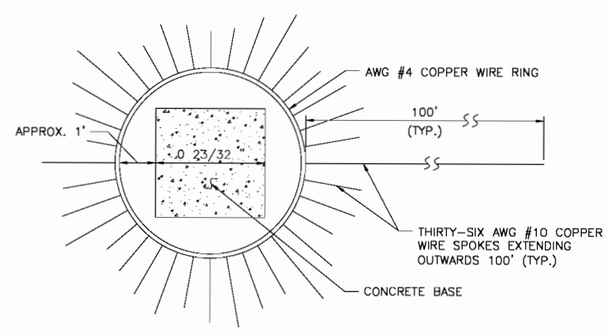

SECTION A-A

(NTS)

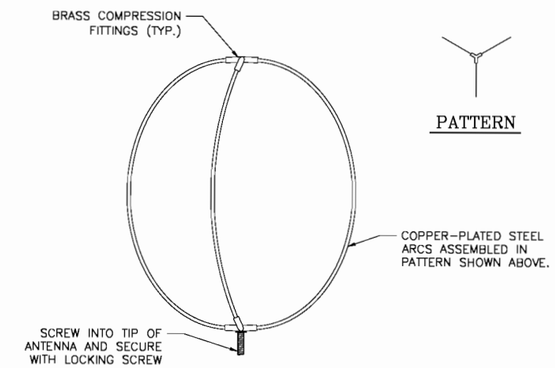

TOP TERMINATION

(NTS)

NOTES:

1. THE MEDIUM FREQUENCY WHIP ANTENNA SHALL BE MODEL #V-147-CL2 AS MANUFACTURED BY VALCOM LTD., OR APPROVED EQUAL. THE TIP OF THE ANTENNA SHALL NOT BE MORE THAN 49' ABOVE GROUND/CONCRETE BASE.
2. TOP TERMINATION OF ANTENNA SHALL BE MODEL #VS30 VALCOSPHERE AS MANUFACTURED BY VALCOM LTD., OR APPROVED EQUAL.
3. STEEL TOWER SHALL BE MODEL #VTGS-20BH STEEL TOWER AS MANUFACTURED BY VALCOM LTD., OR APPROVED EQUAL. TOWER IS AVAILABLE IN 4 HEIGHTS: 2', 4', 6' AND 8'. THE THRUWAY AUTHORITY WILL DETERMINE HEIGHT TO BE USED.
4. TUBE ACCEPTS MODEL #VGP-10 GIN POLE, MANUFACTURED BY VALCOM, LTD.. GIN POLE OR APPROVED EQUAL IS USED TO FACILITATE ERECTING AND DISMANTLING OF ANTENNA.
5. UNLESS OTHERWISE NOTED ALL LABOR, MATERIALS, TOOLS, EQUIPMENT AND INCIDENTALS AS NECESSARY TO COMPLETE THE WORK ASSOCIATED WITH INSTALLATION OF THE HAR SHALL BE INCLUDED IN PRICE BID FOR ITEM 25680.9900 – HIGHWAY ADVISORY RADIO (HAR) ANTENNA AND TOWER.

NEW YORK STATE OF OPPORTUNITY. | Thruway Authority

U.S. CUSTOMARY STANDARD SHEET

HAR/AA SYSTEM
ANTENNA 1
GROUND MOUNT WHIP
(DRAWING A-1)
SHEET 7 OF 9

APPROVED SEPTEMBER 21, 2016

/S/ PATRICK THOMPSON, P.E.
DIRECTOR DESIGN SUPPORT
SERVICES BUREAU

ISSUED UNDER EI 16-001

TA 680-02

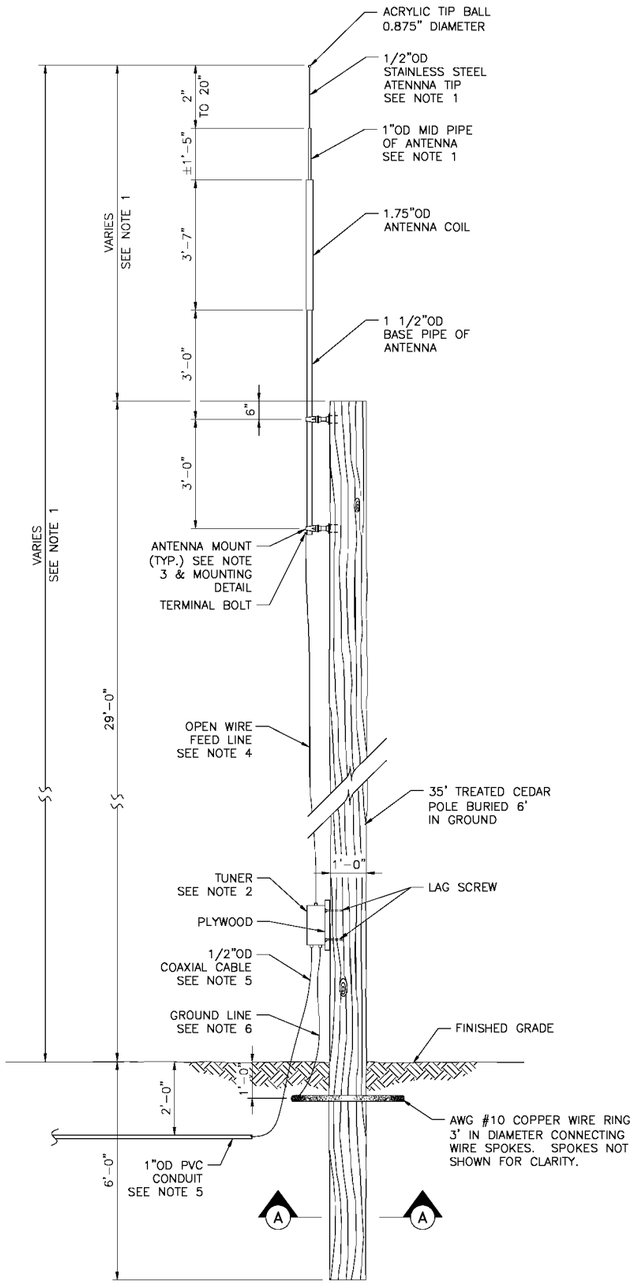

ELEVATION OF ANTENNA

SCALE: 1/4" = 1'-0"

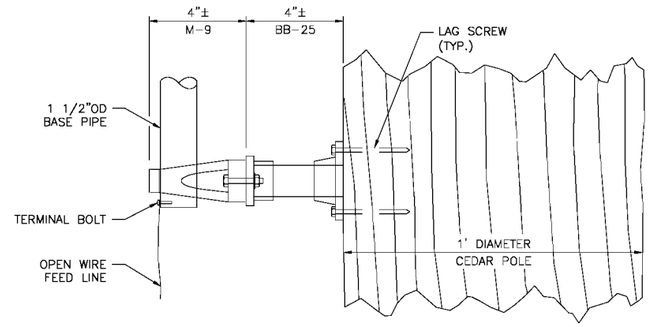

MOUNTING DETAIL

SCALE: 2" = 1'-0"

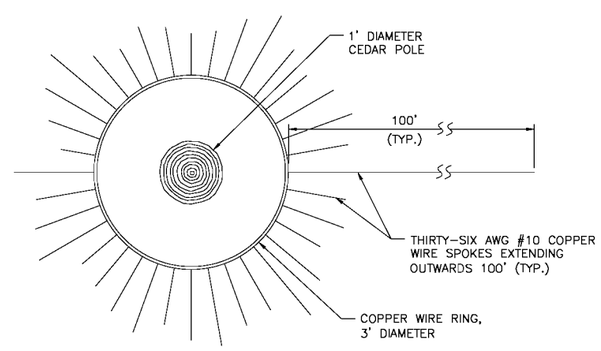

SECTION A–A

N.T.S.

NOTES:

1. THE MEDIUM FREQUENCY POLE–MOUNTED PIPE ANTENNA SHALL BE MODEL #SF530 OR #SF1610SP AS MANUFACTURED BY MORAD ELECTRONICS CORPORATION OR APPROVED EQUAL. TIP OF ANTENNA SHALL NOT BE MORE THAN 49' ABOVE GROUND. LENGTH OF TIP AND MID PIPE SHALL BE DETERMINED BY FREQUENCY.
2. THE TUNER SHALL BE MODEL #CP–15 AS MANUFACTURED BY RADIO SYSTEMS, INC. OR APPROVED EQUAL AND SHALL BE INSTALLED IN A NEMA 4X ENCLOSURE. THE ENCLOSURE SHALL BE MODEL #A16148CHSCFG AS MANUFACTURED BY HOFFMAN OR APPROVED EQUAL. FOR ADDITIONAL TUNER DETAILS, CONTACT THE NYS THRUWAY AUTHORITY INFORMATION TECHNOLOGY/TECHNOLOGY DEVELOPMENT OFFICE.
3. ANTENNA MOUNTS SHALL BE MORAD M–9 AND BB–25 MOUNTS OR APPROVED EQUAL.
4. THE OPEN WIRE FEED LINE SHALL BE 10AWG INSULATED HOOKUP WIRE, MODEL #37110 AS MANUFACTURED BY BELDEN OR APPROVED EQUAL. IT MAY BE INSTALLED USING TWO 5 1/2" WOOD SCREW STANDOFFS WITH INSULATORS.
5. THE COAXIAL CABLE SHALL BE CONNECTED TO THE TRANSMITTER. THE PVC CONDUIT CARRYING THE COAXIAL CABLE SHALL CHANGE DIRECTION, WHEN NECESSARY, BY SWEEPS; NO L–BENDS SHALL BE USED.
6. THE GROUND LINE SHALL BE 0AWG STRANDED OR BRAIDED COPPER.
7. UNLESS OTHERWISE NOTED ALL LABOR, MATERIALS, TOOLS, EQUIPMENT AND INCIDENTALS AS NECESSARY TO COMPLETE THE WORK ASSOCIATED WITH THE INSTALLATION OF THE HAR SHALL BE INCLUDED IN THE PRICE BID FOR ITEM 25680.990001 – HIGHWAY ADVISORY RADIO (HAR) POLE–MOUNTED PIPE ANTENNA AND TUNER, (IN–GROUND MOUNT).
8. IF AVAILABLE LAND WILL NOT ACCOMMODATE THE 100' WIRE RADIALS, THE ANTENNA MAY BE MOUNTED ON:
   a. A TOLL CANOPY
   b. THE METAL ROOF OF A BUILDING OR
   c. THE SIDE OF A BUILDING.

   FOR SUCH INSTALLATIONS, SEE STANDARD SHEET TA 680–10 (DRAWING A–3) AND CONTACT THE NYS THRUWAY AUTHORITY INFORMATION TECHNOLOGY/TECHNOLOGY DEVELOPMENT OFFICE FOR SPECIAL MOUNTING DETAILS RELATIVE TO ALL MORAD ANTENNA MOUNTS.

NEW YORK STATE OF OPPORTUNITY. | Thruway Authority

U.S. CUSTOMARY STANDARD SHEET

HAR/AA SYSTEM
ANTENNA 2
POLE CANOPY MOUNT
(DRAWING A-2)
SHEET 8 OF 9

APPROVED SEPTEMBER 21, 2016

/S/ PATRICK THOMPSON, P.E.
DIRECTOR DESIGN SUPPORT
SERVICES BUREAU

ISSUED UNDER EI 16-001

TA 680-02

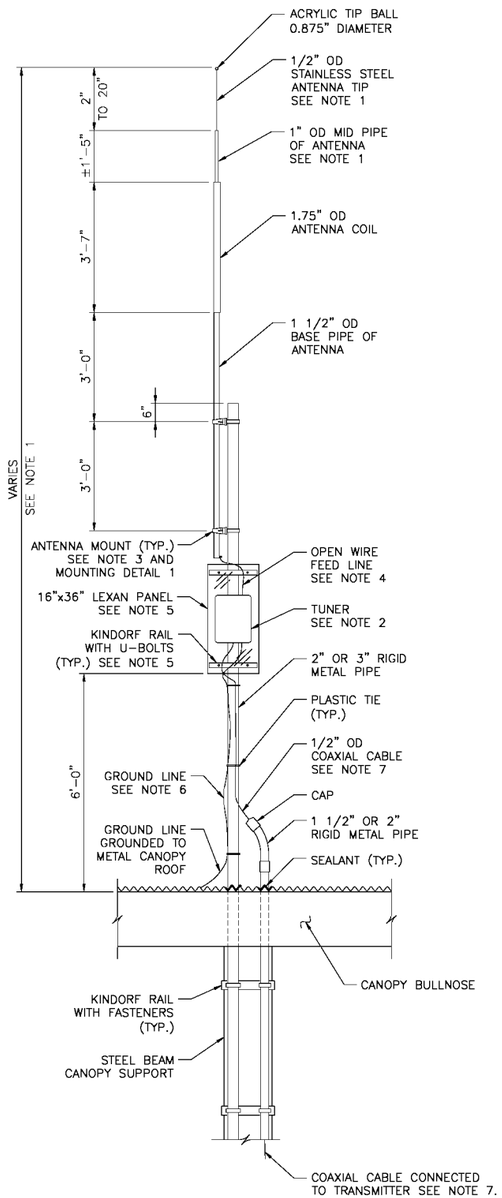

CANOPY MOUNT

(NTS)

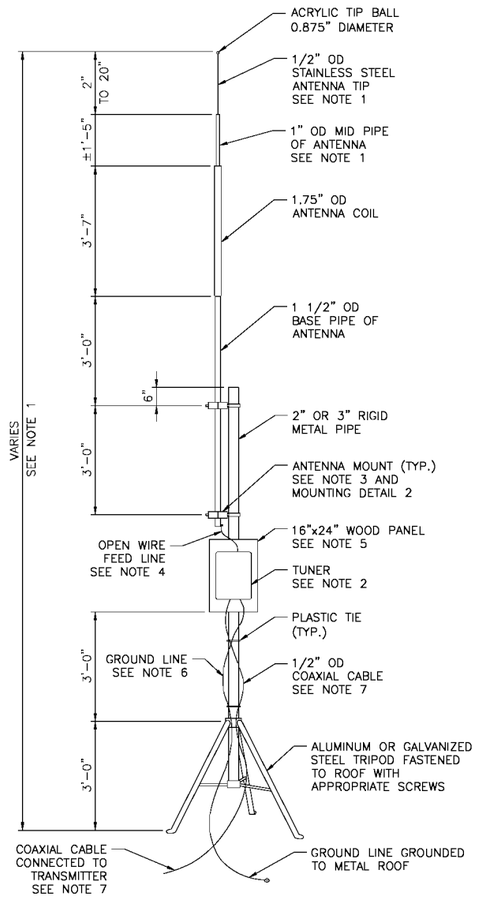

ROOF MOUNT FOR METAL ROOF

(NTS)

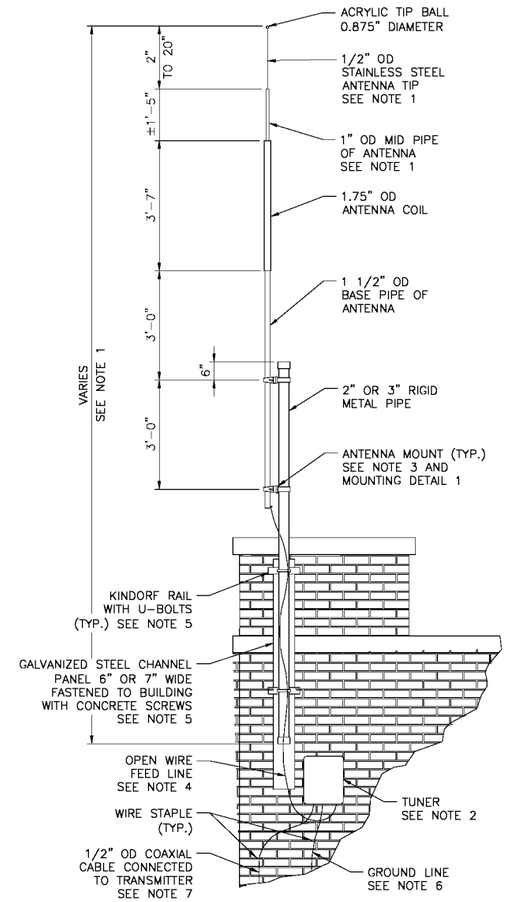

BUILDING MOUNT

(NTS)

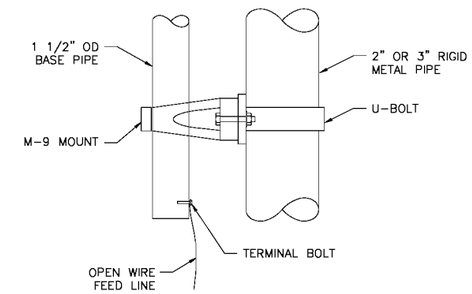

MOUNTING DETAIL 1

(NTS)

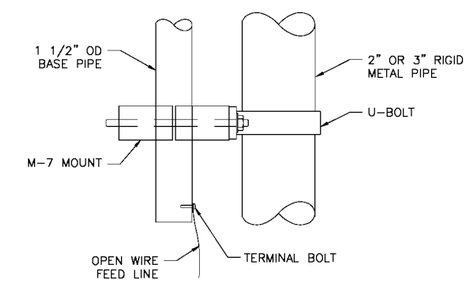

MOUNTING DETAIL 2

(NTS)

NOTES:

1. THE MEDIUM FREQUENCY POLE-MOUNTED PIPE ANTENNA SHALL BE MODEL #SF530 OR #SF1610SP AS MANUFACTURED BY MORAD ELECTRONICS CORPORATION OR APPROVED EQUAL. TIP OF ANTENNA SHALL NOT BE MORE THAN 49' ABOVE GROUND. LENGTH OF TIP AND MID PIPE SHALL BE DETERMINED BY FREQUENCY.
2. THE TUNER SHALL BE MODEL #CP-15 AS MANUFACTURED BY RADIO SYSTEMS, INC. OR APPROVED EQUAL AND SHALL BE INSTALLED IN A NEMA 4X ENCLOSURE. THE ENCLOSURE SHALL BE MODEL #A16148CHSCFG AS MANUFACTURED BY HOFFMAN OR APPROVED EQUAL. FOR ADDITIONAL TUNER DETAILS, CONTACT THE NYS THRUWAY AUTHORITY INFORMATION TECHNOLOGY/TECHNOLOGY DEVELOPMENT OFFICE.
3. ANTENNA MOUNTS SHALL BE MORAD M-7 OR M-9 OR APPROVED EQUAL.
4. THE OPEN WIRE FEED LINE SHALL BE 1DAWG INSULATED HOOKUP WIRE, MODEL #37110 AS MANUFACTURED BY BELDEN OR APPROVED EQUAL.
5. SIZE AND MATERIAL OF PANEL AS WELL AS TYPE OF PANEL-TO-POLE FASTENERS MAY VARY ACCORDING TO AVAILABILITY.
6. THE GROUND LINE SHALL BE OAWG STRANDED OR BRAIDED COPPER. THE BUILDING MOUNT REQUIRES A STEEL FRAME BUILDING WITH THE GROUND LINE CONNECTED TO A BOND POINT ON THE STEEL FRAME WHICH IS NO MORE THAN 6' FROM THE TUNER.
7. THE COAXIAL CABLE SHALL BE CONNECTED TO THE TRANSMITTER. WHEN UNDERGROUND INSTALLATION IS REQUIRED, 1" OD PVC CONDUIT SHALL BE USED TO CARRY THE COAXIAL CABLE AND SHALL CHANGE DIRECTION, WHEN NECESSARY, BY SWEEPS; NO L-BENDS SHALL BE USED.
8. UNLESS OTHERWISE NOTED ALL LABOR, MATERIALS, TOOLS, EQUIPMENT AND INCIDENTALS AS NECESSARY TO COMPLETE THE WORK ASSOCIATED WITH THE INSTALLATION OF THE HAR SHALL BE INCLUDED IN THE PRICE BID AS APPLICABLE FOR EITHER
   ITEM 25680.990002 – HIGHWAY ADVISORY RADIO (HAR) POLE-MOUNTED PIPE ANTENNA ANO TUNER, (CANOPY MOUNT) OR
   ITEM 25680.990003 – HIGHWAY ADVISORY RADIO (HAR) POLE-MOUNTED PIPE ANTENNA AND TUNER, (ROOF MOUNT FOR METAL ROOF) OR
   ITEM 25680.990004 – HIGHWAY ADVISORY RADIO (HAR) POLE-MOUNTED PIPE ANTENNA AND TUNER, (BUILDING MOUNT).
9. FOR SPECIAL MOUNTING DETAILS CONTACT THE NYS THRUWAY AUTHORITY INFORMATION TECHNOLOGY/TECHNOLOGY DEVELOPMENT OFFICE.

NEW YORK STATE OF OPPORTUNITY. | Thruway Authority

U.S. CUSTOMARY STANDARD SHEET

HAR/AA SYSTEM
ANTENNA 2
CANOPY/BUILDING POLE MOUNT PIPE
(DRAWING A-3)
SHEET 9 OF 9

APPROVED SEPTEMBER 21, 2016

/S/ PATRICK THOMPSON, P.E.
DIRECTOR DESIGN SUPPORT
SERVICES BUREAU

ISSUED UNDER EI 16-001

TA 680-02

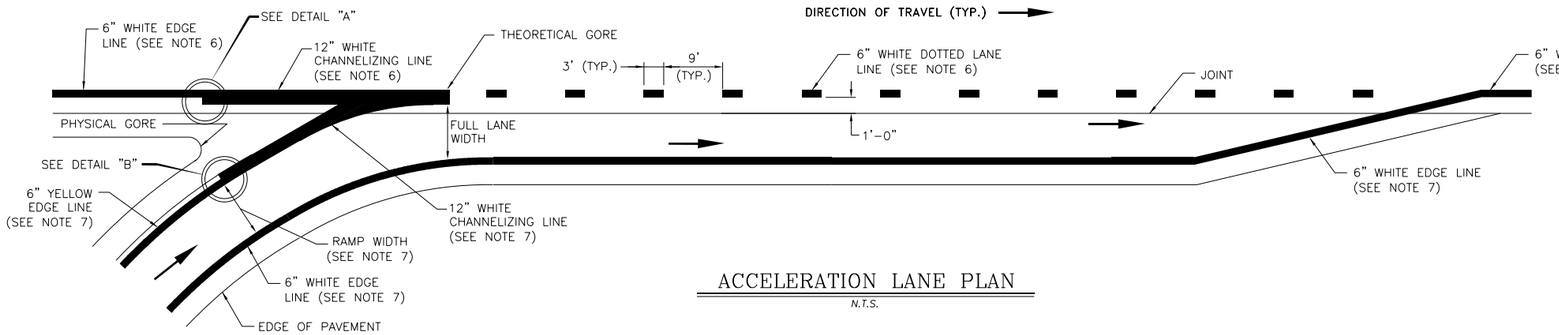

ACCELERATION LANE PLAN

N.T.S.

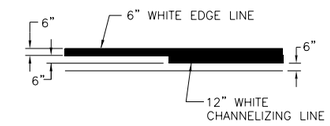

DETAIL "A"

N.T.S.

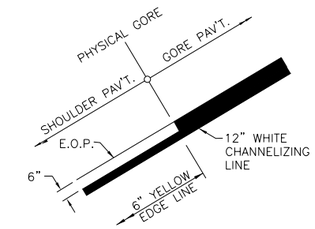

DETAIL "B"

N.T.S.

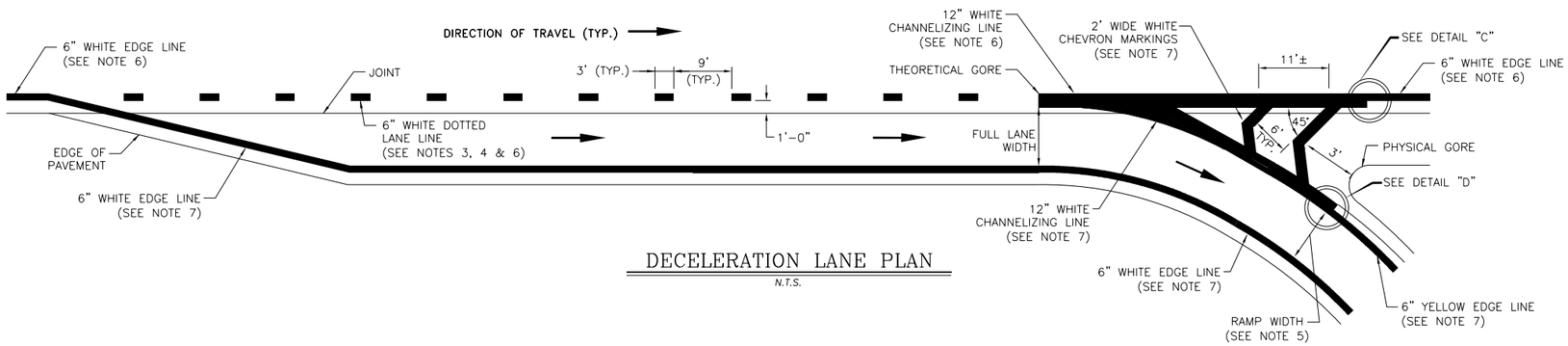

DECELERATION LANE PLAN

N.T.S.

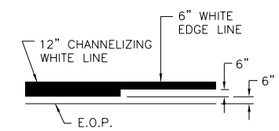

DETAIL "C"

N.T.S.

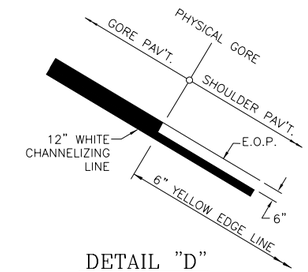

DETAIL "D"

N.T.S.

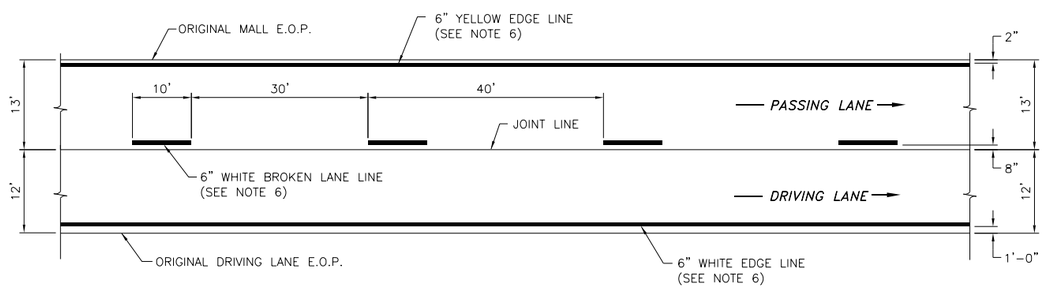

TYPICAL TWO-LANE PLAN

N.T.S.

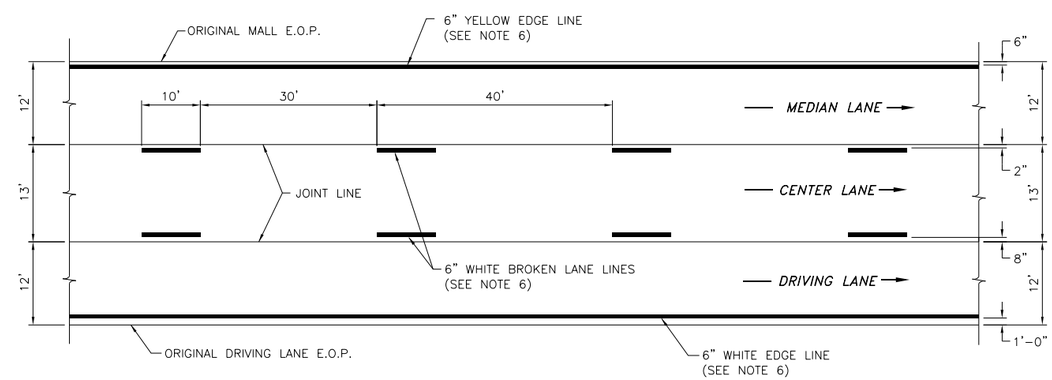

TYPICAL THREE-LANE PLAN

N.T.S.

NOTES:

1. WHEN THE CONTRACT DOES NOT REQUIRE REPAVING THE DECELERATION LANE GORE, THE EXISTING GORE (NEUTRAL) AREA MARKING PATTERN SHALL BE REPAINTED.
2. WHEN THE CONTRACT REQUIRES REPAVING THE DECELERATION LANE GORE, CHEVRON MARKINGS SHALL BE PLACED ON THE NEWLY PAVED GORE (NEUTRAL) AREAS AS SHOWN IN THE "DECELERATION LANE PLAN".
3. A 12-INCH WIDE DOTTED LANE LINE SHALL BE USED TO DISTINGUISH A LANE DROP FROM A NORMAL EXIT RAMP.
4. DOTTED LANE LINES USED IN ADVANCE OF LANE DROPS SHOULD BEGIN AT LEAST 1/2 MILE IN ADVANCE OF THE THEORETICAL GORE.
5. WHEN PAVEMENT MARKINGS ARE REMOVED ON RAMPS, THE CONTRACTOR SHALL NOTE THE EXISTING RAMP WIDTHS, AND PAVEMENT MARKING LOCATIONS AND REPLACE THE MARKINGS IN THE SAME LOCATION UNLESS OTHERWISE NOTED IN THE CONTRACT DOCUMENTS.
6. UNLESS OTHERWISE NOTED, ALL MAINLINE PAVEMENT MARKINGS SHALL BE HIGHLY REFLECTORIZED TRIPLE DROP EPOXY PAVEMENT STRIPES, INCLUDING RIGHT AND LEFT EDGE LINES, BROKEN LANE LINES, DOTTED LINES AND THE 12-INCH CHANNELIZING LINE ALONG THE MAINLINE SIDE OF THE GORE (NEUTRAL) AREA.
7. UNLESS OTHERWISE NOTED, ALL RAMP PAVEMENT MARKINGS SHALL BE EPOXY REFLECTORIZED PAVEMENT STRIPES, INCLUDING RIGHT EDGE LINE, SOLID AND BROKEN LANE LINES ON MULTIPLE-LANE RAMPS, CHEVRON MARKINGS IN NEUTRAL AREA, THE 12-INCH CHANNELIZING LINE ALONG THE RAMP SIDE OF THE GORE (NEUTRAL) AREA, AND THE LEFT EDGE LINE FOLLOWING/PRECEDING THE PHYSICAL GORE.

NEW YORK STATE OF OPPORTUNITY. | Thruway Authority

U.S. CUSTOMARY STANDARD SHEET

PAVEMENT MARKING DETAILS
SHEET 1 OF 2
ASPHALT PAVEMENT
(DRAWING PMA-1)

APPROVED MAY 1, 2018

/S/ PATRICK THOMPSON, P.E.
DIRECTOR DESIGN SUPPORT SERVICES BUREAU

ISSUED UNDER DB 18-001

TA 685-01

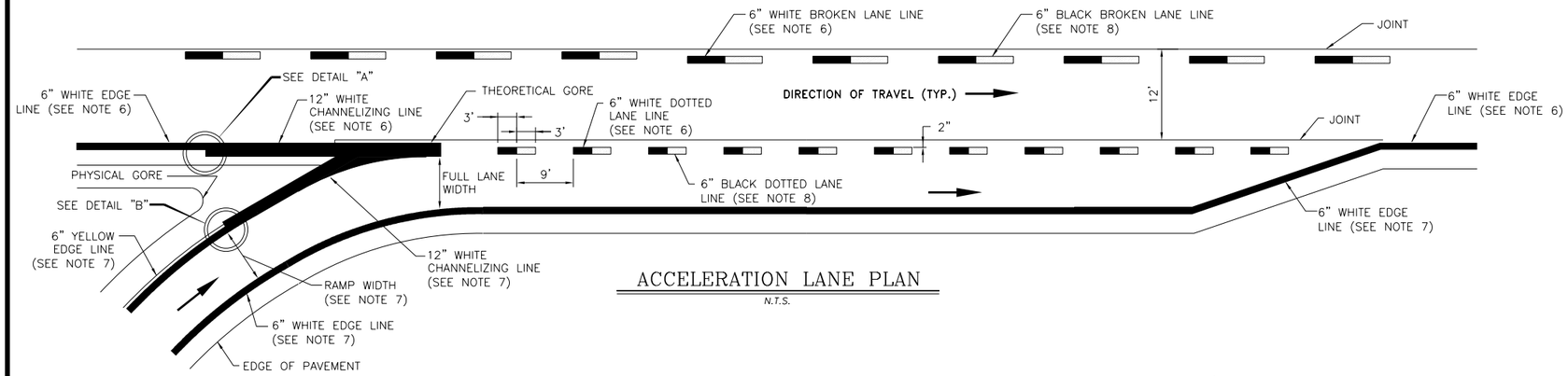

ACCELERATION LANE PLAN

N.T.S.

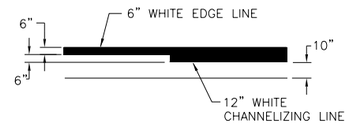

DETAIL "A"

N.T.S.

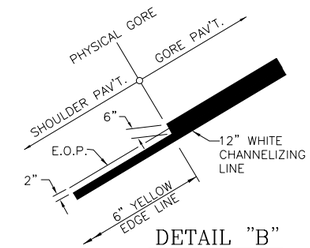

DETAIL "B"

N.T.S.

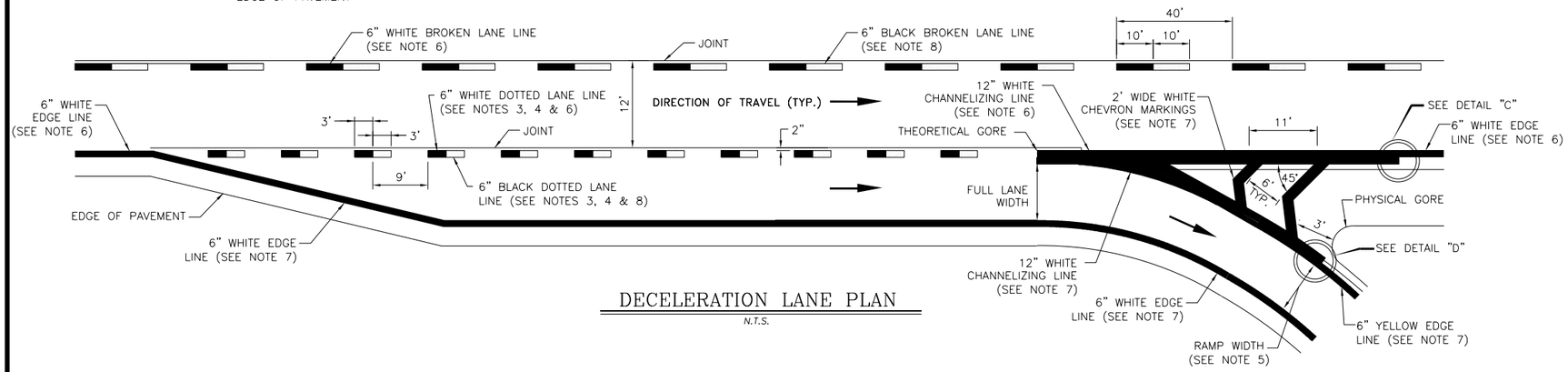

DECELERATION LANE PLAN

N.T.S.

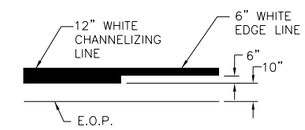

DETAIL "C"

N.T.S.

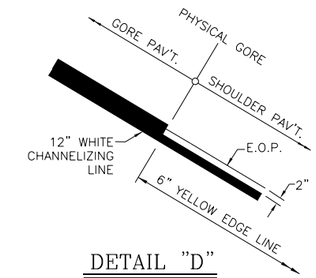

DETAIL "D"

N.T.S.

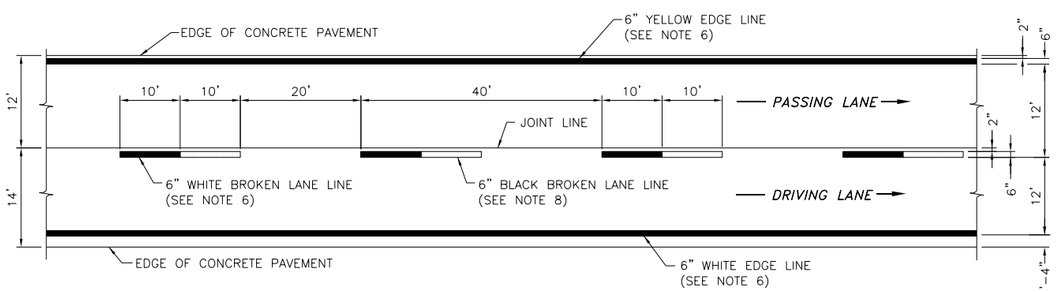

TYPICAL TWO-LANE PLAN

N.T.S.

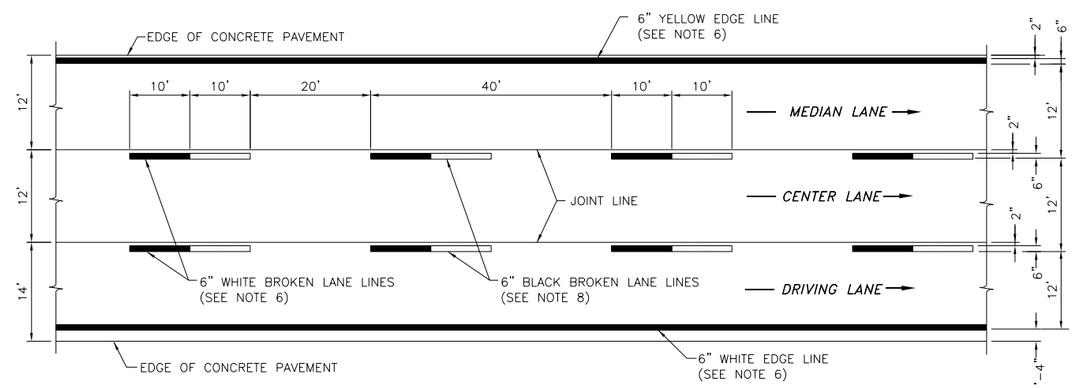

TYPICAL THREE-LANE PLAN

N.T.S.

NOTES:

1. WHEN THE CONTRACT DOES NOT REQUIRE REPAVING THE DECELERATION LANE GORE, THE EXISTING GORE (NEUTRAL) AREA MARKINGS SHALL BE REPAINTED.
2. WHEN THE CONTRACT REQUIRES REPAVING THE DECELERATION LANE GORE, CHEVRON MARKINGS SHALL BE PLACED ON THE NEWLY PAVED GORE (NEUTRAL) AREAS AS SHOWN IN THE "DECELERATION LANE PLAN".
3. A 12-INCH WIDE DOTTED LANE LINE SHALL BE USED TO DISTINGUISH A LANE DROP FROM A NORMAL EXIT RAMP.
4. DOTTED LANE LINES USED IN ADVANCE OF LANE DROPS SHOULD BEGIN AT LEAST 1/2 MILE IN ADVANCE OF THE THEORETICAL GORE.
5. WHEN PAVEMENT MARKINGS ARE REMOVED ON RAMPS, THE CONTRACTOR SHALL NOTE THE EXISTING RAMP WIDTHS AND PAVEMENT MARKING LOCATIONS AND REPLACE THE MARKINGS IN THE SAME LOCATION UNLESS OTHERWISE NOTED IN THE CONTRACT DOCUMENTS.
6. UNLESS OTHERWISE NOTED, ALL MAINLINE PAVEMENT MARKINGS SHALL BE HIGHLY REFLECTORIZED TRIPLE DROP EPOXY PAVEMENT STRIPES, INCLUDING RIGHT AND LEFT EDGE LINES, BROKEN LANE LINES, DOTTED LINES, AND THE 12-INCH CHANNELIZING LINE ALONG THE MAINLINE SIDE OF THE GORE (NEUTRAL) AREA.
7. UNLESS OTHERWISE NOTED, ALL RAMP PAVEMENT MARKINGS SHALL BE EPOXY REFLECTORIZED PAVEMENT MARKING STRIPES, INCLUDING RIGHT EDGE LINE, SOLID AND BROKEN LANE LINES ON MULTIPLE-LANE RAMPS, CHEVRON MARKINGS IN THE NEUTRAL AREA, THE 12-INCH CHANNELIZING LINE ALONG THE RIGHT SIDE OF THE GORE (NEUTRAL) AREA, AND THE LEFT EDGE LINE FOLLOWING/PRECEDING THE PHYSICAL GORE.
8. THE CONTRAST PAVEMENT MARKINGS SHALL BE BLACK EPOXY PAVEMENT STRIPES.

NEW YORK STATE OF OPPORTUNITY. Thruway Authority

U.S. CUSTOMARY STANDARD SHEET

PAVEMENT MARKING DETAILS
SHEET 2 OF 2
CONCRETE PAVEMENT
(DRAWING PMC-1)

APPROVED MAY 1, 2018

/S/ PATRICK THOMPSON, P.E.
DIRECTOR DESIGN SUPPORT SERVICES BUREAU

ISSUED UNDER DB 18-001

TA 685-01

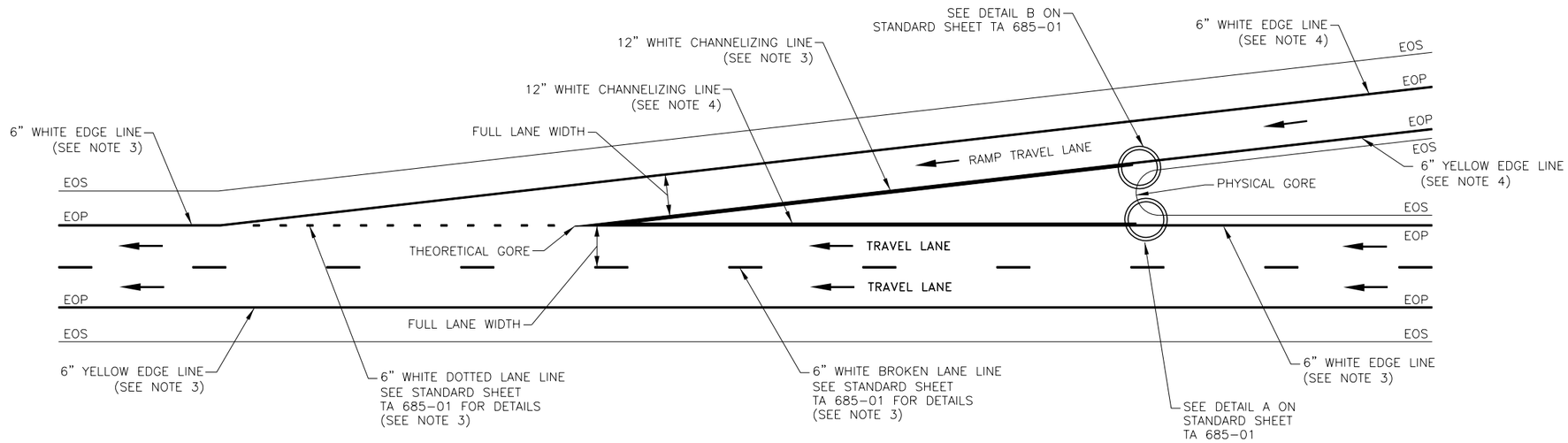

TAPERED ACCELERATION LANE PLAN

N.T.S.

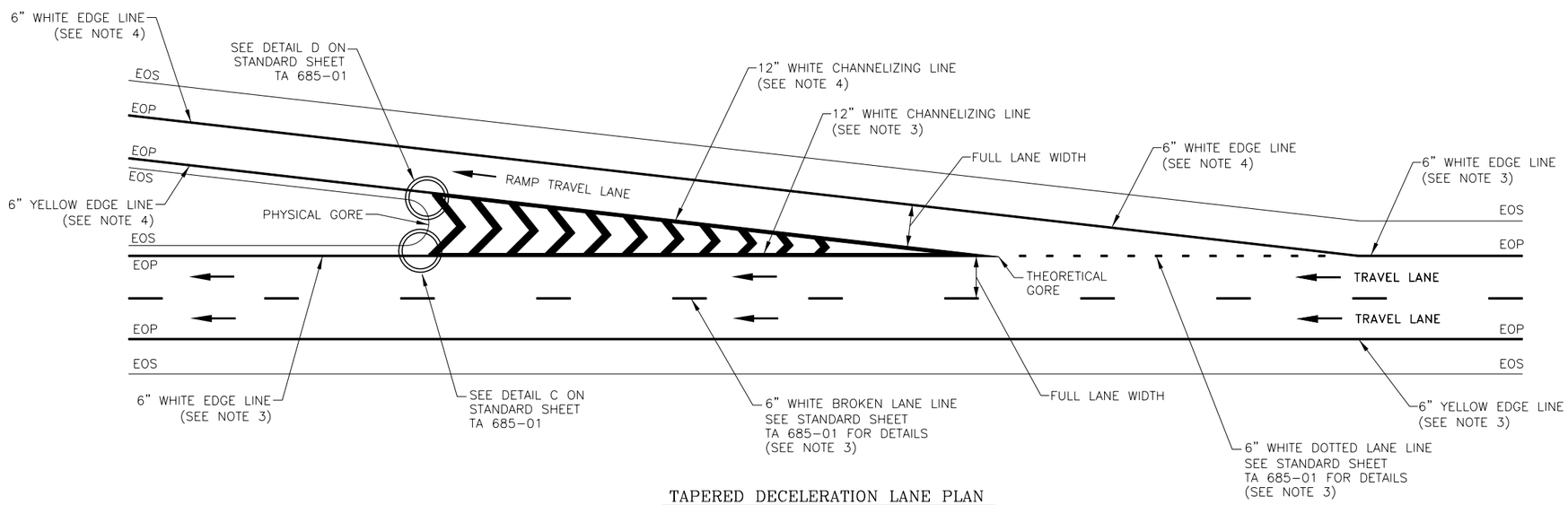

TAPERED DECELERATION LANE PLAN

N.T.S.

NOTES:

1. THIS SHEET SHALL BE USED AS A GENERAL REFERENCE GUIDE FOR RESTRIPING EXISTING PAVEMENT MARKINGS UNLESS OTHERWISE NOTED IN THE CONTRACT DOCUMENTS.
2. WHEN THE CONTRACT REQUIRES REPAVING THE DECELERATION LANE GORE, CHEVRON MARKINGS SHALL BE PLACED ON THE NEWLY PAVED GORE (NEUTRAL) AREAS AS SHOWN IN THE "DECELERATION LANE PLAN".
3. UNLESS OTHERWISE NOTED, ALL MAINLINE PAVEMENT MARKINGS SHALL BE HIGHLY REFLECTORIZED TRIPLE DROP EPOXY PAVEMENT STRIPES, INCLUDING RIGHT AND LEFT EDGE LINES, BROKEN LANE LINES, DOTTED LINES AND THE 12-INCH CHANNELIZING LINE ALONG THE MAINLINE SIDE OF THE GORE (NEUTRAL) AREA.
4. UNLESS OTHERWISE NOTED, ALL RAMP PAVEMENT MARKINGS SHALL BE EPOXY REFLECTORIZED PAVEMENT STRIPES, INCLUDING RIGHT EDGE LINE, CHEVRON MARKINGS IN NEUTRAL AREA, THE 12-INCH CHANNELIZING LINE ALONG THE RAMP SIDE OF THE GORE (NEUTRAL) AREA, AND THE LEFT EDGE LINE FOLLOWING/PRECEDING THE PHYSICAL GORE.

EOS = EDGE OF SHOULDER
EOP = EDGE OF PAVEMENT

NEW YORK STATE OF OPPORTUNITY. Thruway Authority

U.S. CUSTOMARY STANDARD SHEET

PAVEMENT MARKING DETAILS TAPERED ACCELERATION AND DECELERATION LANES (DRAWING PMA-2)

APPROVED NOVEMBER 1, 2018

/S/ PATRICK THOMPSON, P.E.
DIRECTOR DESIGN SUPPORT SERVICES BUREAU

ISSUED UNDER DB 18-005

TA 685-02

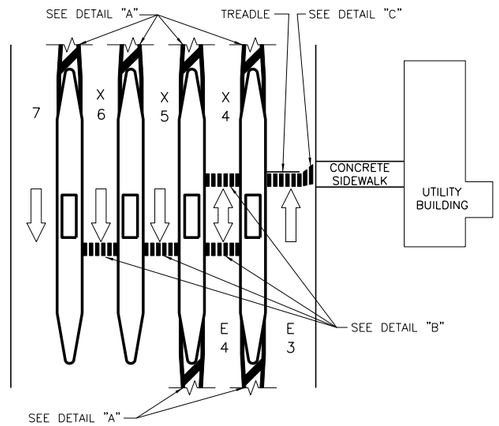

TOLL PLAZA PLAN

N.T.S.

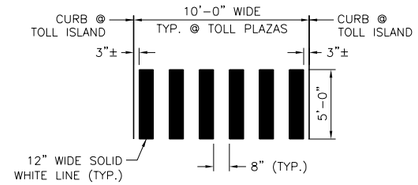

DETAIL "B"
TYPICAL TOLL LANE CROSSWALK

N.T.S.

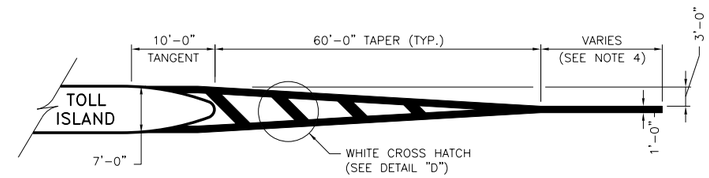

DETAIL "A"
TYPICAL TOLL ISLAND GORE STRIPING

N.T.S.

NOTES:

1. ALL PAVEMENT STRIPING, LETTERS, AND SYMBOLS SHALL CONFORM TO THE NATIONAL MANUAL ON UNIFORM TRAFFIC CONTROL DEVICES (NMUTCD) AND NEW YORK STATE SUPPLEMENT UNLESS OTHERWISE NOTED.
2. CROSSWALKS AT TOLL PLAZAS WILL BE LOCATED AT THE DOWNSTREAM SIDE OF TOLL BOOTH. AT REVERSIBLE TOLL LANES THERE SHALL BE TWO (2) CROSS WALKS. THEIR EXACT LOCATION SHALL BE DETERMINED IN THE FIELD BY THE ENGINEER.
3. CROSSWALKS SHALL NOT BE INSTALLED OVER TREADLES. WHERE TREADLES ARE IN LINE WITH SIDEWALKS, DETAIL "C" SHALL BE USED WHERE POSSIBLE AND LAID OUT IN THE FIELD AS ORDERED BY THE ENGINEER.
4. THE TYPICAL TOLL ISLAND GORE TAIL LENGTH IS 30 FT. HOWEVER, LENGTHS MAY VARY, A.O.B.E.
5. EXTRA CARE MUST BE TAKEN TO ENSURE PAVEMENT IS CLEAN AND DRY PRIOR TO INSTALLING PAVEMENT MARKINGS.

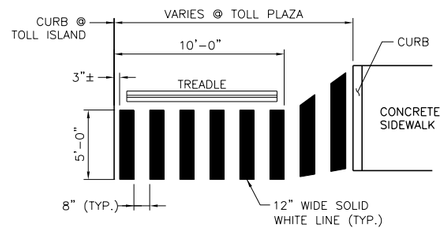

DETAIL "C"
TYPICAL TOLL LANE CROSSWALK

N.T.S.

LEGEND

3 – TOLL LANE NUMBER

E – ENTRANCE TO MAINLINE

X – EXIT FROM MAINLINE

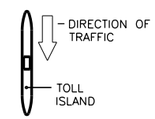

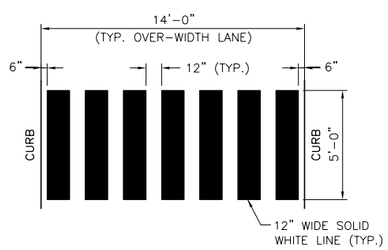

TYPICAL OVER-WIDTH
TOLL LANE CROSSWALK

N.T.S.

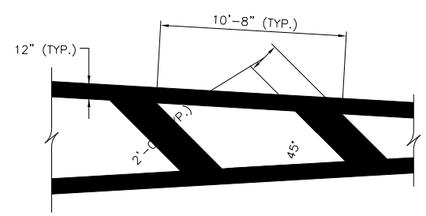

DETAIL "D"
CROSS HATCH STRIPING DETAIL

N.T.S.

NEW YORK STATE OF OPPORTUNITY. | Thruway Authority

U.S. CUSTOMARY STANDARD SHEET

TOLL ISLAND GORE
AND CROSSWALK STRIPING DETAILS
(DRAWING TISD)

APPROVED SEPTEMBER 21, 2016

/S/ PATRICK THOMPSON, P.E.
DIRECTOR DESIGN SUPPORT
SERVICES BUREAU

ISSUED UNDER EI 16-001

TA 685-03

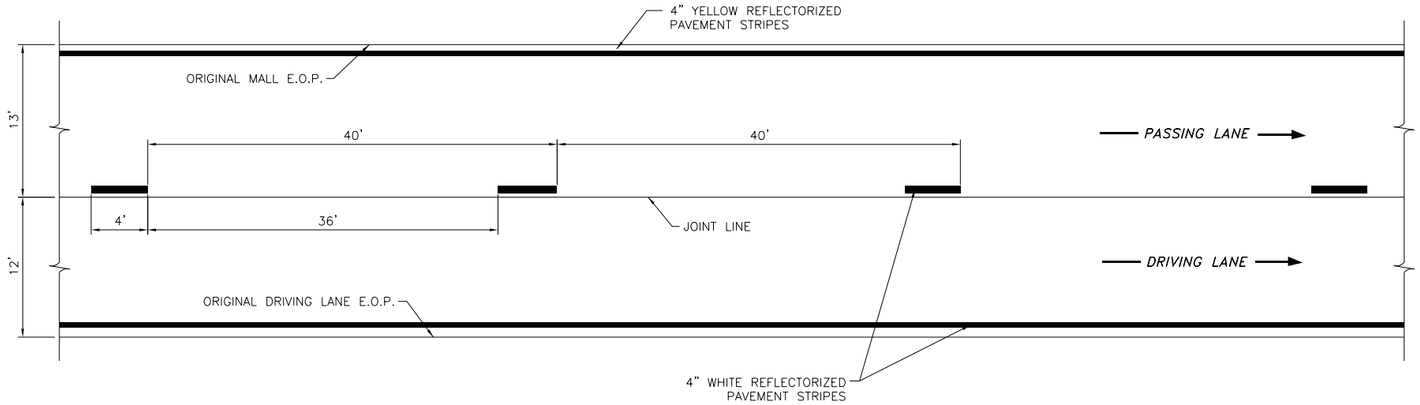

TYPICAL PLAN
TEMPORARY PAVEMENT MARKINGS – TWO LANE
N.T.S.

NOTE: DETAIL SHOWN IS FOR FINISHED OR UNFINISHED PAVEMENT SURFACES. (SEE NOTES 3, 4, & 5)

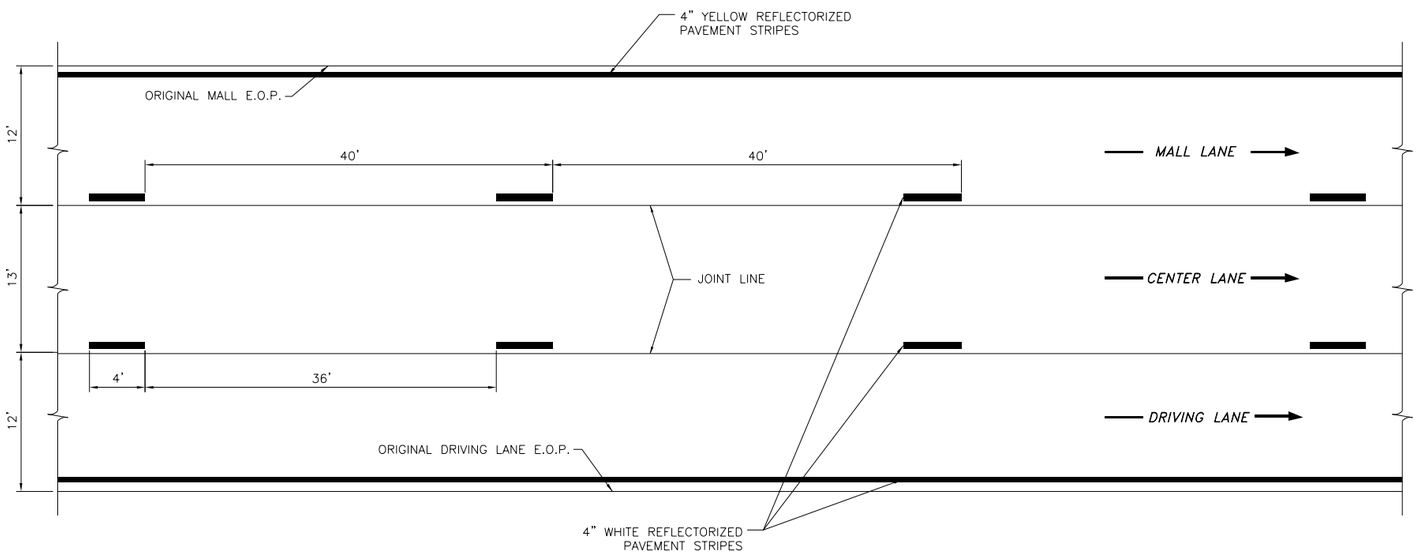

TYPICAL PLAN
TEMPORARY PAVEMENT MARKINGS – THREE LANE
N.T.S.

NOTE: DETAIL SHOWN IS FOR FINISHED OR UNFINISHED PAVEMENT SURFACES. (SEE NOTES 3, 4, & 5)

GENERAL NOTES:

1. TEMPORARY PAVEMENT MARKINGS SHALL BE PROVIDED IN ACCORDANCE WITH SECTION 619-3.06 OF THE STANDARD SPECIFICATIONS.
2. PAYMENT FOR THE TEMPORARY PAVEMENT MARKINGS SHALL BE IN ACCORDANCE WITH SECTION 619-5.06.
3. PAVEMENT MARKING PAINT MAY BE USED FOR TEMPORARY PAVEMENT MARKINGS ON ALL UNDERLYING PAVEMENT COURSES (i.e. BASE, BINDER, LEVELING, AND SHIM). PAVEMENT MARKING PAINT SHALL NOT BE USED ON ANY FINISHED PAVEMENT SURFACE UNLESS THE LOCATION OF THE MARKINGS COINCIDE WITH FINAL EPOXY PAVEMENT MARKINGS.
4. REMOVABLE PAVEMENT MARKINGS PLACED ON FINISHED PAVEMENT SURFACES SHALL BE OFFSET 12" FROM THE FINAL POSITION OF THE PERMANENT PAVEMENT MARKINGS.
5. OFFSETS FOR TEMPORARY PAVEMENT MARKINGS MAY BE ADJUSTED WITH THE APPROVAL OF THE ENGINEER TO ACCOMMODATE CONSTRUCTION STAGING.
6. SOLID EDGE LINES ARE REQUIRED PRIOR TO OPENING A LANE TO TRAFFIC UNLESS MIARDS ARE IN PLACE, IN WHICH CASE THE CONTRACTOR HAS UP TO 7 CALENDAR DAYS TO INSTALL THE SOLID EDGE LINES.

NEW YORK STATE OF OPPORTUNITY. Thruway Authority

U.S. CUSTOMARY STANDARD SHEET

TEMPORARY PAVEMENT MARKING DETAILS (DRAWING PM-T)

APPROVED JULY 1, 2018	ISSUED UNDER DB 18-002
/S/ PATRICK THOMPSON, P.E. DIRECTOR DESIGN SUPPORT SERVICES BUREAU	**TA 685-04**

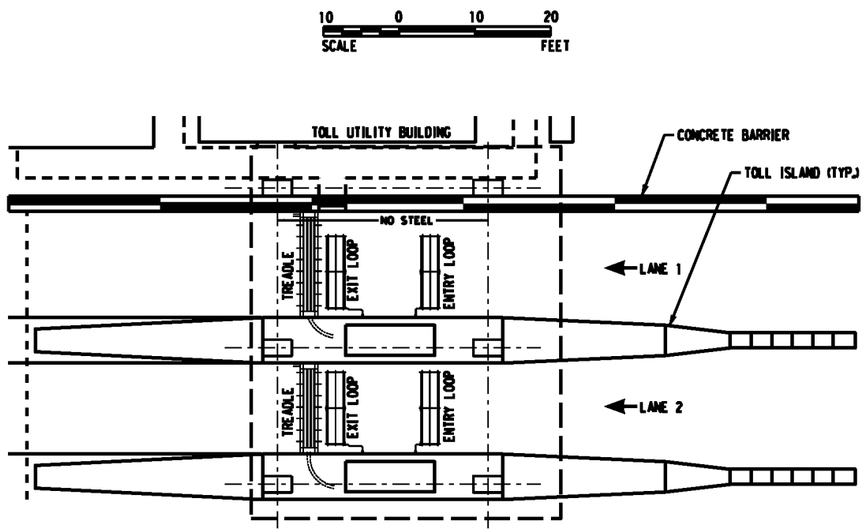

TOLL PLAZA PLAN
1" = 10'-0"

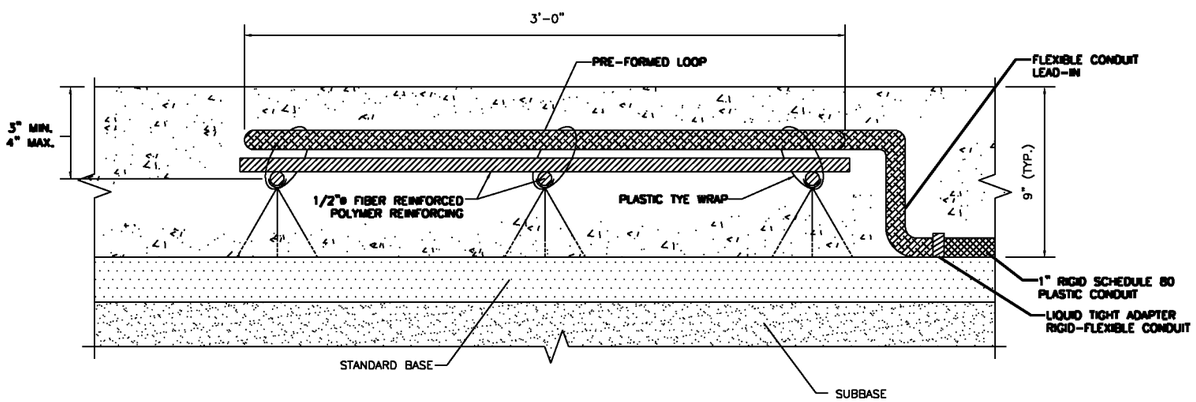

ELEVATION - LOOP DETECTOR ASSEMBLY
3" = 1'-0"

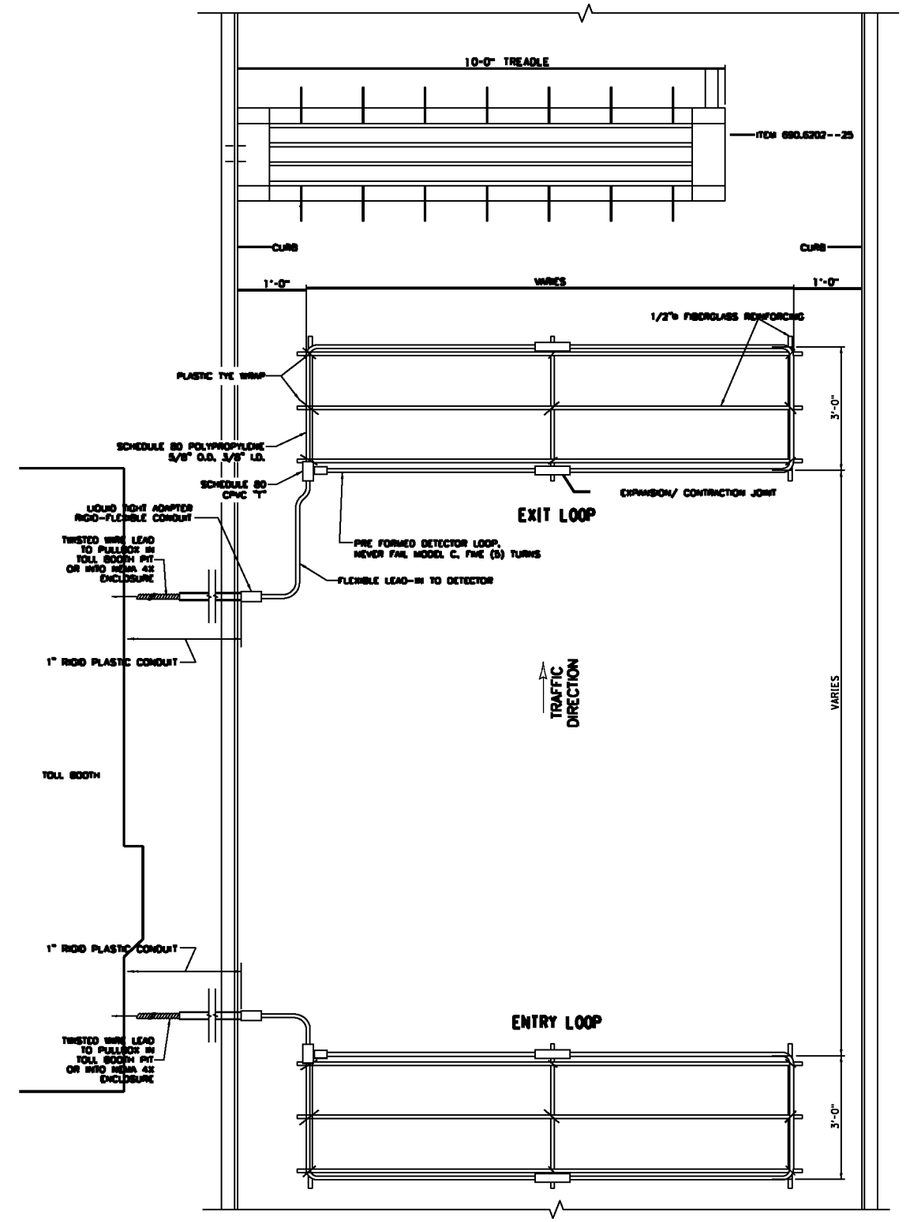

LOOP DETECTOR DETAIL
NOT TO SCALE

NOTES:

1. PAYMENT WILL BE MADE FOR INSTALLATION OF TWO (2) LOOPS PER LANE BY CONTRACTOR. APPROVAL OF INSTALLATION SHALL BE OBTAINED FROM THRUWAY ITS MAINTENANCE BEFORE CONCRETE IS PLACED IN EACH LANE. COST OF RIGID TO FLEXIBLE LIQUID TIGHT ADAPTER SHALL BE INCLUDED IN CAST-IN-PLACE PREFORMED INDUCTANCE LOOP ITEM 680.5830-25.

2. TREADLE SHALL BE PLACED ADJACENT TO THE LEFT SIDE OF THE TOLL LANE AND SHALL ABUT THE CURB IN THE DIRECTION OF TRAFFIC. WHERE THE LANE IS REVERSABLE, THE EXIT DIRECITON SHALL CONTROL.

3. NO STEEL REBAR OR MESH SHALL BE PLACED IN THE SAME SLAB AS THE LOOPS.

4. ONLY ONE 90° SWEEP PERMITTED BETWEEN TREADLE AND BOOTH PIT. NO ELBOWS, TEES, OR LBs ALLOWED.

5. ANY DEVIATIONS FROM THIS PLAN MUST BE APPROVED BY THE DIRECTOR OF ITS MAINTENANCE.

NEW YORK STATE OF OPPORTUNITY. Thruway Authority

U.S. CUSTOMARY STANDARD SHEET

LOOP AND TREADLE PLAN
SINGLE DIRECTION TOLL LANE
(SHEET 1 OF 2)
(DRAWING LTP-1)

APPROVED JULY 1, 2017

/S/ PATRICK THOMPSON, P.E.
DIRECTOR DESIGN SUPPORT SERVICES BUREAU

ISSUED UNDER DB 17-001

TA 690-01

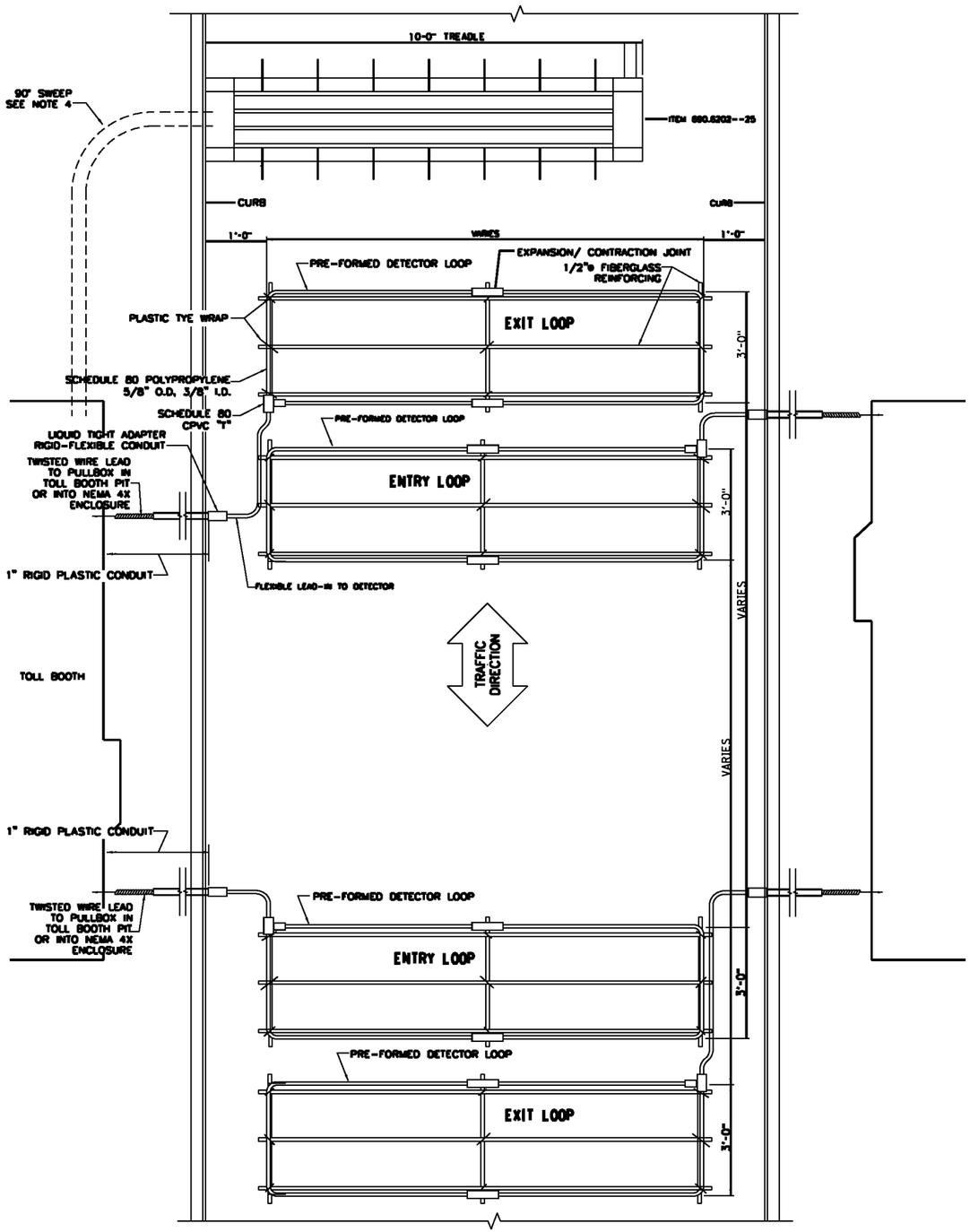

LOOP DETECTOR DETAIL
(NTS)

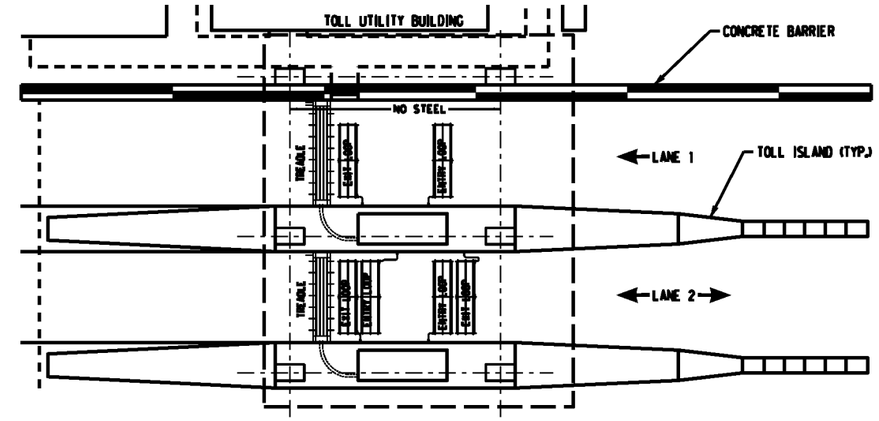

TOLL PLAZA PLAN
(NTS)

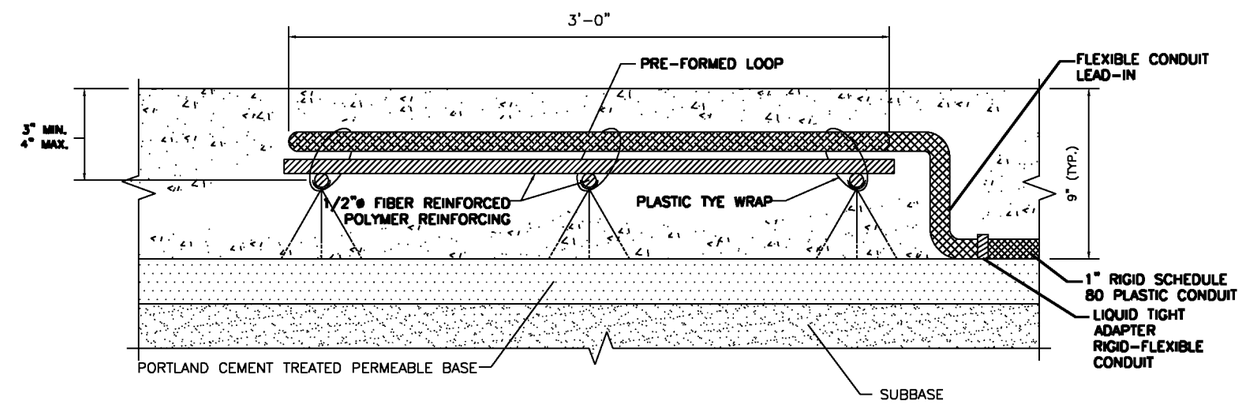

ELEVATION - LOOP DETECTOR ASSEMBLY
(NTS)

NOTES:

1. PAYMENT WILL BE MADE FOR INSTALLATION OF FOUR (4) LOOPS PER LANE BY CONTRACTOR. APPROVAL OF INSTALLATION SHALL BE OBTAINED FROM THRUWAY ITS MAINTENANCE BEFORE CONCRETE IS PLACED IN EACH LANE. COST OF RIGID TO FLEXIBLE LIQUID TIGHT ADAPTER SHALL BE INCLUDED IN CAST-IN-PLACE PREFORMED INDUCTANCE LOOP ITEM 680.5830-25.
2. TREADLE SHALL BE PLACED ADJACENT TO THE LEFT SIDE OF THE TOLL LANE AND SHALL ABUT THE CURB IN THE DIRECTION OF TRAFFIC. WHERE THE LANE IS REVERSABLE, THE EXIT DIRECITON SHALL CONTROL.
3. NO STEEL REBAR OR MESH SHALL BE PLACED IN THE SAME SLAB AS THE LOOPS.
4. ONLY ONE 90° SWEEP PERMITTED BETWEEN TREADLE AND BOOTH PIT. NO ELBOWS, TEES, OR LBs ALLOWED.
5. ANY DEVIATIONS FROM THIS PLAN MUST BE APPROVED BY THE DIRECTOR OF ITS MAINTENANCE.

NEW YORK STATE OF OPPORTUNITY. Thruway Authority

U.S. CUSTOMARY STANDARD SHEET

LOOP AND TREADLE PLAN
BI-DIRECTION TOLL LANE
(SHEET 2 OF 2)
(DRAWING LTP-2)

APPROVED JULY 1, 2017

/S/ PATRICK THOMPSON, P.E.
DIRECTOR DESIGN SUPPORT
SERVICES BUREAU

ISSUED UNDER DB 17-001

TA 690-01

MIN. COVER
TOP & SIDES: 2"
BOTTOM: 1½"

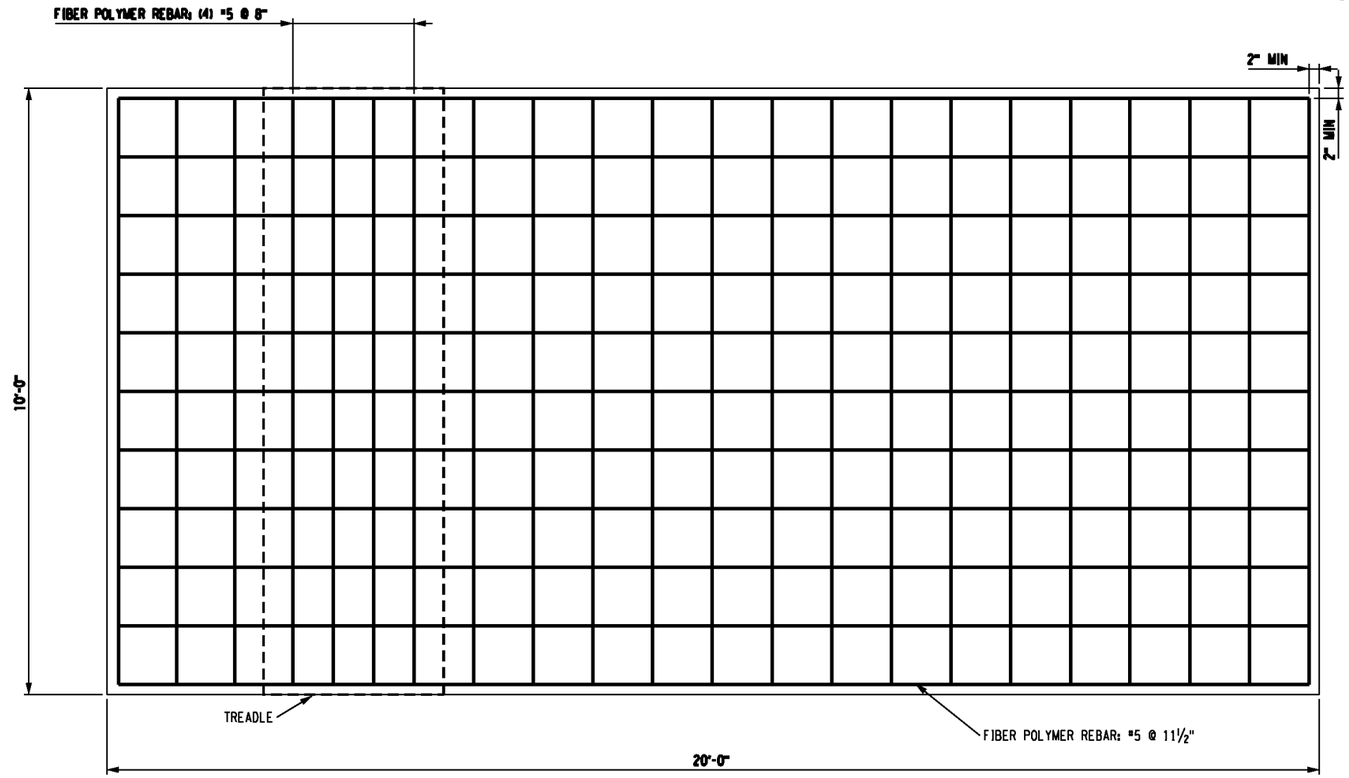

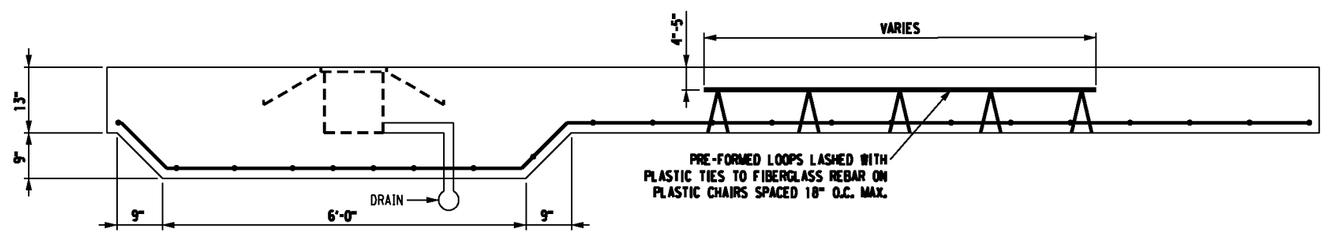

TREADLE DETECTOR SLAB DETAIL
NOT TO SCALE

NEW YORK STATE OF OPPORTUNITY. | Thruway Authority

U.S. CUSTOMARY STANDARD SHEET

TOLL LANE SLAB
REINFORCEMENT PLAN
(DRAWING LTP-3)

APPROVED JULY 1, 2017

/S/ PATRICK THOMPSON, P.E.
DIRECTOR DESIGN SUPPORT
SERVICES BUREAU

ISSUED UNDER DB 17-001

TA 690-02

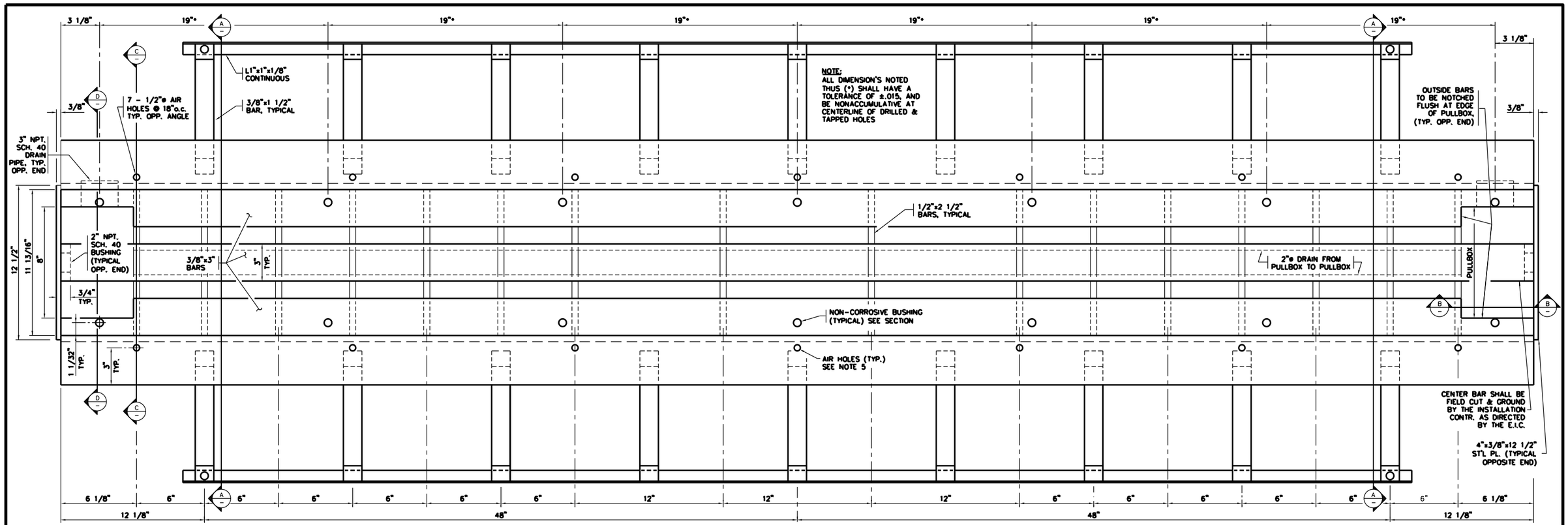

PLAN

SCALE: 3" = 1'-0"

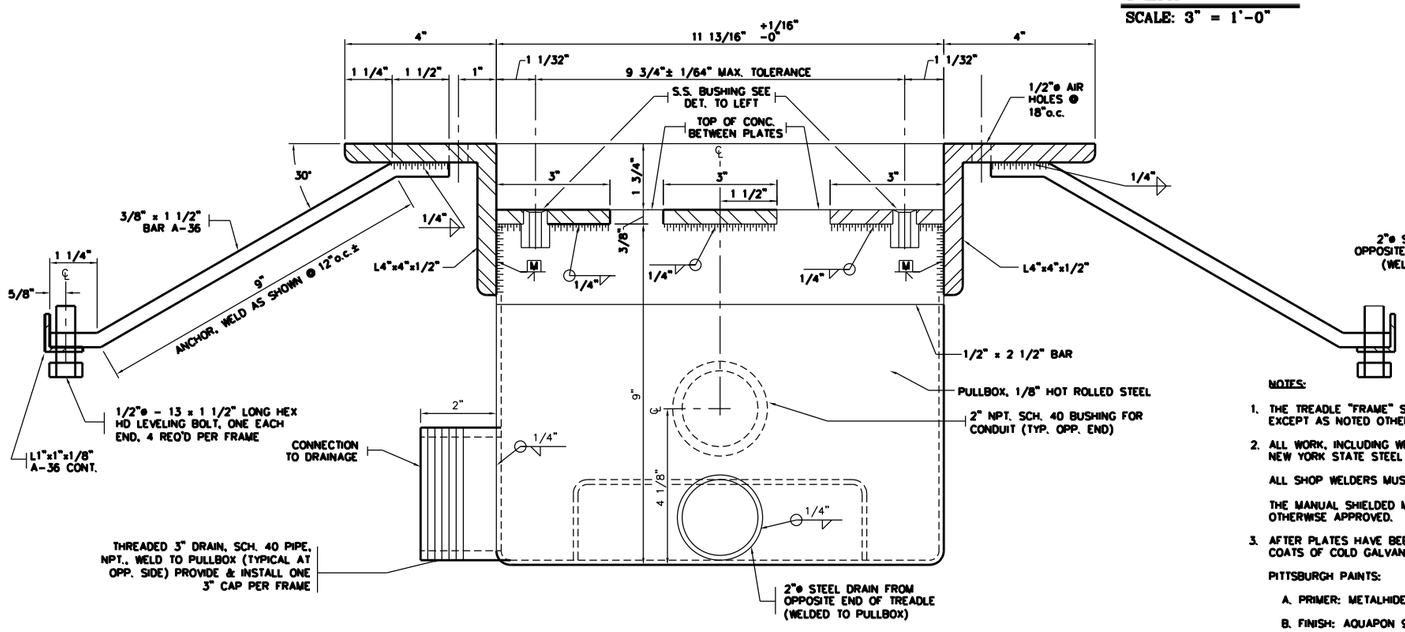

SECTION "A"–"A" (TYPICAL FOR PULLBOX AT OPPOSITE END)

SCALE: 6" = 1' - 6"

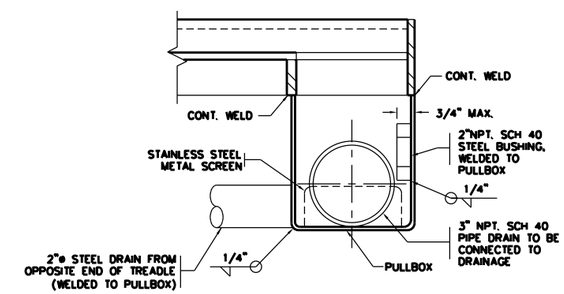

SECTION "B"–"B" (TYPICAL BOTH ENDS)

SCALE: 6" = 1' - 6"

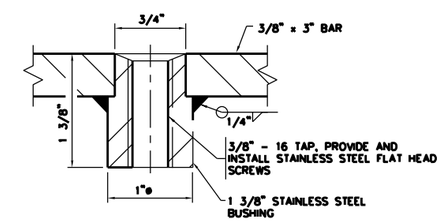

SECTION THRU NON-CORROSIVE BUSHING

SCALE: 3" = 1'-0"

NOTES:

1. THE TREADLE "FRAME" SHALL BE FABRICATED FROM STEEL MEETING THE SPECIFICATIONS OF THE A.S.T.M. A36, EXCEPT AS NOTED OTHERWISE.
2. ALL WORK, INCLUDING WELDING, MUST BE PERFORMED IN ACCORDANCE WITH THE PROVISIONS OF THE 1981 NEW YORK STATE STEEL CONSTRUCTION MANUAL, INCLUDING CURRENT ADDENDA.

   ALL SHOP WELDERS MUST BE QUALIFIED BY TESTS AS DESCRIBED IN SECTION 8 OF THE N.Y.S.S.C.M.

   THE MANUAL SHIELDED METAL ARC WELDING (SMAW) PROCESS MUST BE USED FOR ALL WELDING UNLESS OTHERWISE APPROVED. ALL WELDS MUST BE PERFORMED USING PROPERLY DRIED E7018 ELECTRODES.
3. AFTER PLATES HAVE BEEN POSITIONED AND WELDED TO MEMBERS, BRUSH BLAST AND PRIME WITH TWO COATS OF COLD GALVANIZING COMPOUND FOLLOWED BY ONE FINISH COAT OF HIGH BUILD EPOXY.

   PITTSBURGH PAINTS:

   A. PRIMER: METALHIDE ONE-PAC 97-676, INORGANIC ZINC RICH PRIMER

   B. FINISH: AQUAPON 97-LINE, HIGH BUILD, SEMI-GLOSS POLYAMIDE-EPOXY COATING

   PREPARATION, APPLICATION AND DRY FILM THICKNESSES SHALL COMPLY WITH THE STANDARDS ESTABLISHED BY THE COATING MANUFACTURER FOR THE PRODUCTS USED.
4. VERIFY TREADLE "FRAME" BUSHING ALIGNMENT PRIOR TO SETTING FRAME IN CONCRETE.
5. LOCATION AND SPACING OF AIR HOLES MAY VARY AND ARE ONLY FUNCTIONAL DURING CONCRETE CASTING PROCESS.

NEW YORK STATE OF OPPORTUNITY. Thruway Authority

U.S. CUSTOMARY STANDARD SHEET

10 FOOT STANDARD TREADLE FRAME
(SHEET 1 OF 4)
(DRAWING TR-1)

APPROVED JANUARY 1, 2020	ISSUED UNDER DB 19-002
/S/ PATRICK THOMPSON, P.E. DIRECTOR DESIGN SUPPORT SERVICES BUREAU	TA 690-03

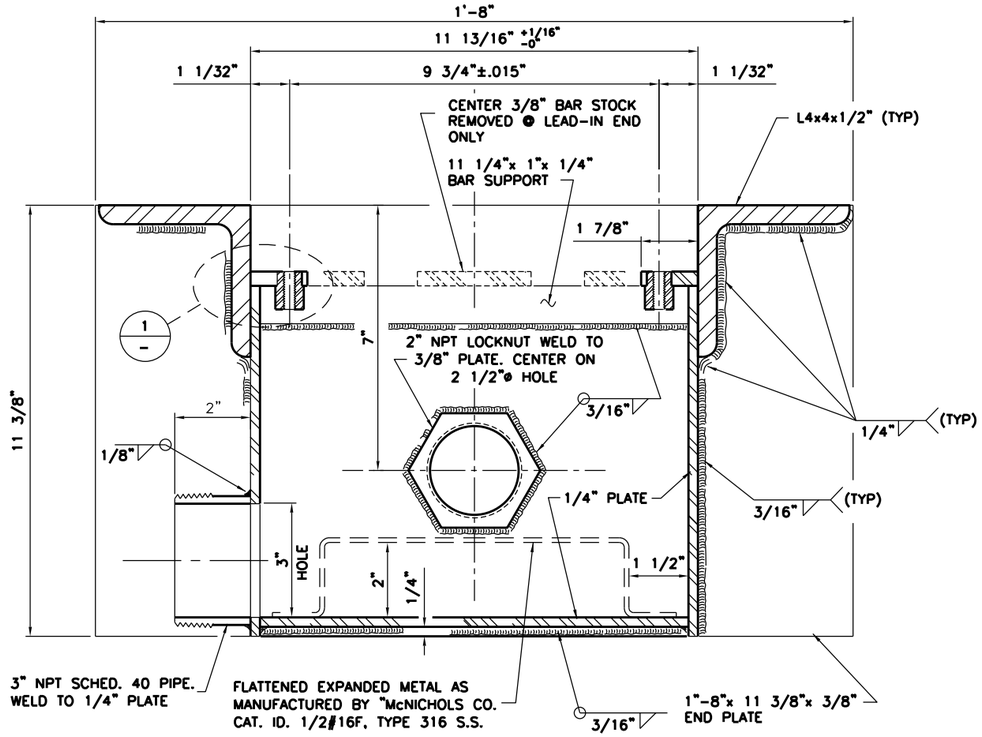

SECTION "D"-"D"

SCALE: 6"=1'-0"

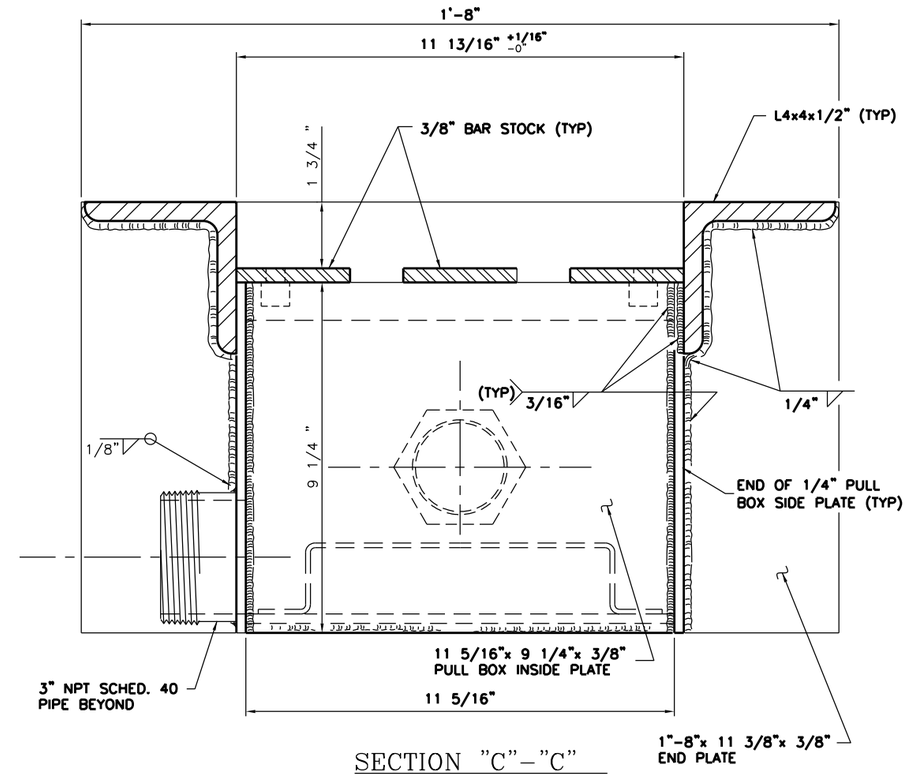

SECTION "C"-"C"

SCALE: 6"=1'-0"

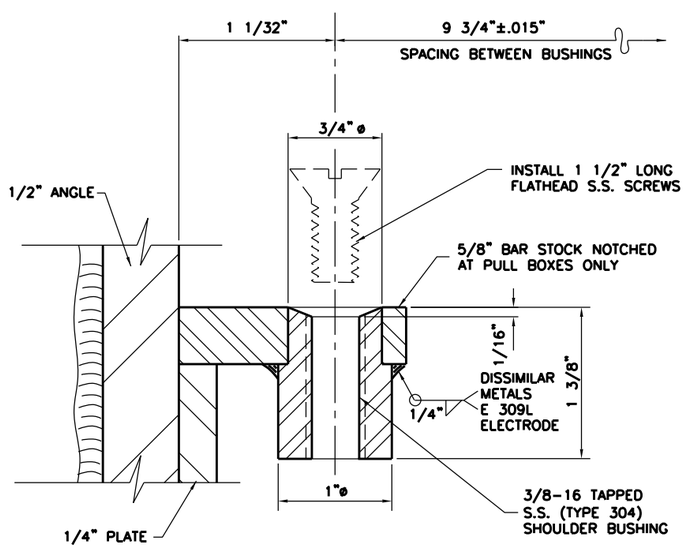

DETAIL "1"

SCALE: 2 : 1

TREADLE FRAME ASSEMBLY NOTES:

1. STRUCTURAL STEEL SHAPES, PLATES, AND BAR STOCK SHALL CONFORM TO ASTM A36, EXCEPT AS NOTED OTHERWISE.
2. TREADLE FRAME ASSEMBLY COMPONENTS SHALL BE JOINED BY WELDING PERFORMED ACCORDING TO THE NEW YORK STATE STEEL CONSTRUCTION MANUAL - 2018, INCLUDING CURRENT ADDENDA AND THE AMERICAN WELDING STAINLESS STEEL WELDING CODE D1.6.
3. ALL SHOP WELDERS MUST BE QUALIFIED BY TESTS AS DESCRIBED IN SECTION 8 OF THE NYSSCM.
4. THE MANUAL SHIELDED METAL ARC WELDING (SMAW) PROCESS MUST BE USED FOR ALL WELDING UNLESS OTHERWISE APPROVED. FOR STAINLESS STEEL TO CARBON STEEL USE THE APPROPRIATE STAINLESS STEEL ELECTRODE. FOR CARBON STEEL TO CARBON STEEL USE E7018 ELECTRODE.
5. BUSHING TOLERANCE - BUSHING PLACEMENT MUST BE WITHIN .015" OF THE INDICATED DIMENSIONS. THE ALLOWABLE TOLERANCE SHALL BE NON-ACCUMULATIVE FROM THE CENTERLINE OF THE TREADLE UNIT IN BOTH DIRECTIONS.
6. FRAME DIMENSIONAL TOLERANCES SHALL BE PLUS OR MINUS 1/16" FROM DESIGNATED DIMENSIONS EXCEPT AS OTHERWISE SHOWN. THIS TOLERANCE SHALL BE APPLIED FIRST TO OVERALL DIMENSIONS AND THEN TO INDIVIDUAL COMPONENT DIMENSION REQUIREMENTS. THE ALLOWABLE WARP OVER THE 10' DIMENSION SHALL NOT EXCEED 1/4" IN ANY DIRECTION.
7. AFTER THE TREADLE FRAME ASSEMBLY HAS BEEN COMPLETLY FABRICATED, IT WILL BE BRUSH BLASTED ACCORDING TO THE COATING MANUFACTURER'S REQUIREMENTS. AFTER INSPECTION AND APPROVAL BY THE ENGINEER, THE UNIT SHALL BE PRIMED WITH TWO COATS OF A ZINC RICH COLD GALVANIZING COMPOUND FOLLOWED BY ONE COAT OF A HIGH BUILD EPOXY. THE COATING PRODUCTS SHALL BE AS MANUFACTURED BY "PITTSBURGH PAINTS"

   A. PRIMER: METALHIDE ONE-PAC 97-676, INORGANIC ZINC RICH PRIMER.

   B. FINISH COAT: AQUAPON 97-LINE, HIGH BUILD, SEMI-GLOSS POLYAMIDE-EPOXY COATING.

NEW YORK STATE OF OPPORTUNITY. | Thruway Authority

U.S. CUSTOMARY STANDARD SHEET

10 FOOT STANDARD TREADLE FRAME
(SHEET 2 OF 4)
(DRAWING TR-2)

APPROVED JANUARY 1, 2020	ISSUED UNDER DB 19-002
/S/ PATRICK THOMPSON, P.E. DIRECTOR DESIGN SUPPORT SERVICES BUREAU	TA 690-03

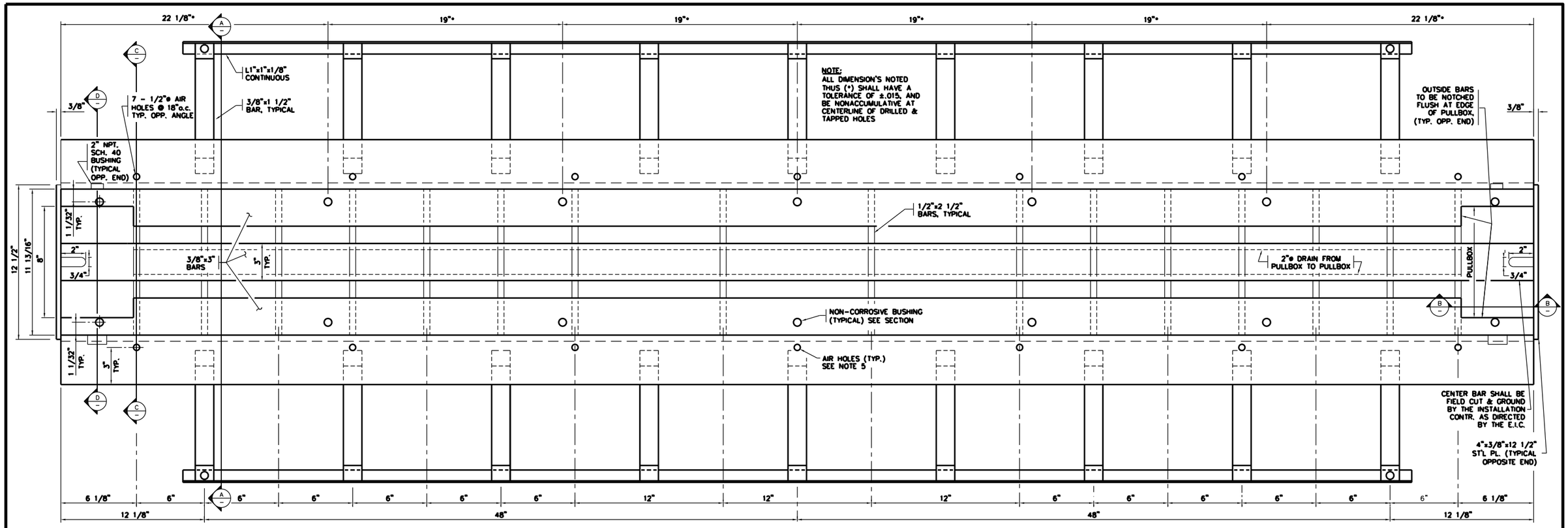

PLAN

SCALE: 3" = 1'-0"

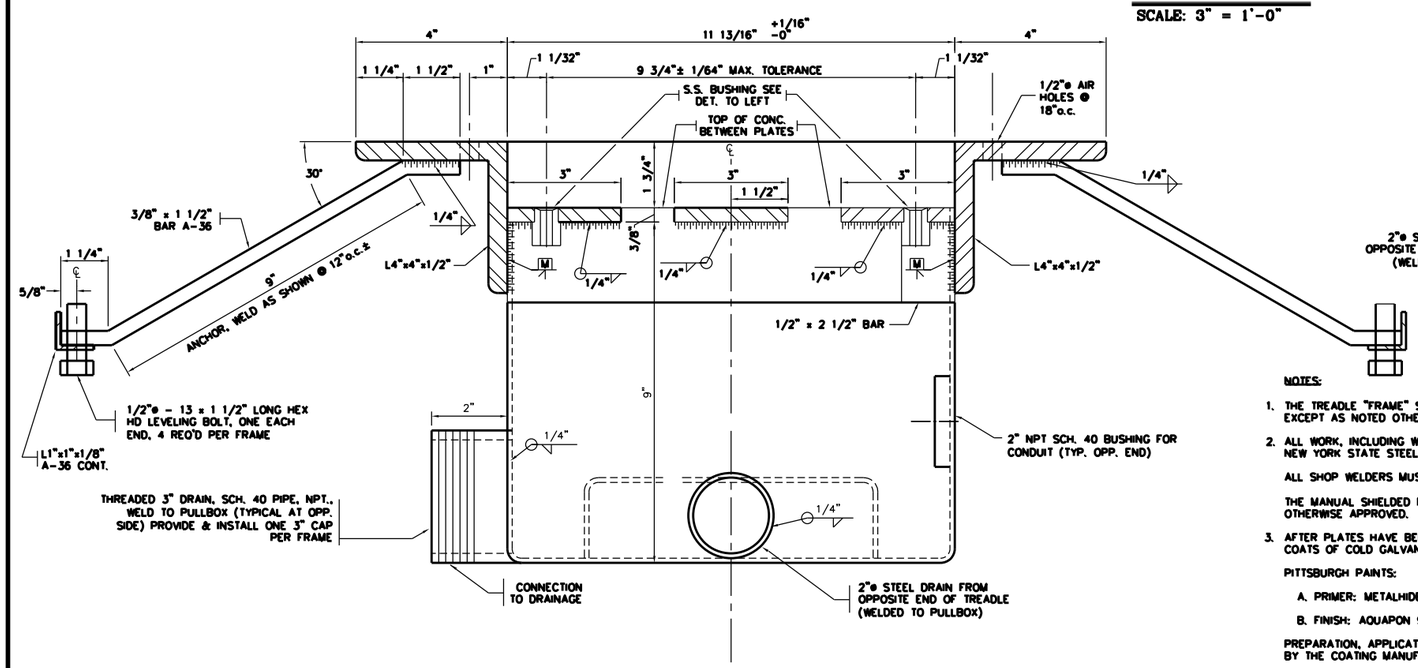

SECTION "A"-"A" (TYPICAL FOR PULLBOX AT OPPOSITE END)

SCALE: 6" = 1' - 0"

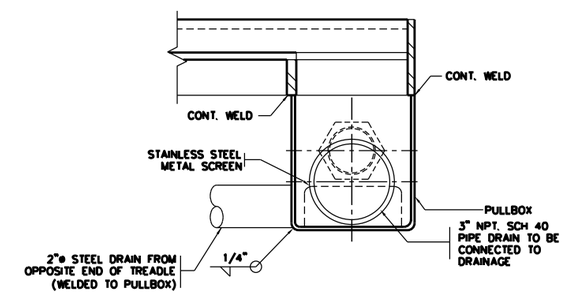

SECTION "B"-"B" (TYPICAL BOTH ENDS)

SCALE: 6" = 1' - 0"

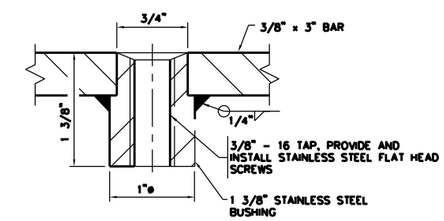

SECTION THRU NON-CORROSIVE BUSHING

SCALE: 3" = 1'-0"

NOTES:

1. THE TREADLE "FRAME" SHALL BE FABRICATED FROM STEEL MEETING THE SPECIFICATIONS OF THE A.S.T.M. A36, EXCEPT AS NOTED OTHERWISE.
2. ALL WORK, INCLUDING WELDING, MUST BE PERFORMED IN ACCORDANCE WITH THE PROVISIONS OF THE 1981 NEW YORK STATE STEEL CONSTRUCTION MANUAL, INCLUDING CURRENT ADDENDA.

   ALL SHOP WELDERS MUST BE QUALIFIED BY TESTS AS DESCRIBED IN SECTION 8 OF THE N.Y.S.S.C.M.

   THE MANUAL SHIELDED METAL ARC WELDING (SMAW) PROCESS MUST BE USED FOR ALL WELDING UNLESS OTHERWISE APPROVED. ALL WELDS MUST BE PERFORMED USING PROPERLY DRIED E7018 ELECTRODES.
3. AFTER PLATES HAVE BEEN POSITIONED AND WELDED TO MEMBERS, BRUSH BLAST AND PRIME WITH TWO COATS OF COLD GALVANIZING COMPOUND FOLLOWED BY ONE FINISH COAT OF HIGH BUILD EPOXY.

   PITTSBURGH PAINTS:

   A. PRIMER: METALHIDE ONE-PAC 97-676, INORGANIC ZINC RICH PRIMER

   B. FINISH: AQUAPON 97-LINE, HIGH BUILD, SEMI-GLOSS POLYAMIDE-EPOXY COATING

   PREPARATION, APPLICATION AND DRY FILM THICKNESSES SHALL COMPLY WITH THE STANDARDS ESTABLISHED BY THE COATING MANUFACTURER FOR THE PRODUCTS USED.
4. VERIFY TREADLE "FRAME" BUSHING ALIGNMENT PRIOR TO SETTING FRAME IN CONCRETE.
5. LOCATION AND SPACING OF AIR HOLES MAY VARY AND ARE ONLY FUNCTIONAL DURING CONCRETE CASTING PROCESS.

NEW YORK STATE OF OPPORTUNITY. Thruway Authority

U.S. CUSTOMARY STANDARD SHEET

10 FOOT MODIFIED TREADLE FRAME
(SHEET 3 OF 4)
(DRAWING TR-3)

APPROVED JANUARY 1, 2020	ISSUED UNDER DB 19-002
/S/ PATRICK THOMPSON, P.E. DIRECTOR DESIGN SUPPORT SERVICES BUREAU	TA 690-03

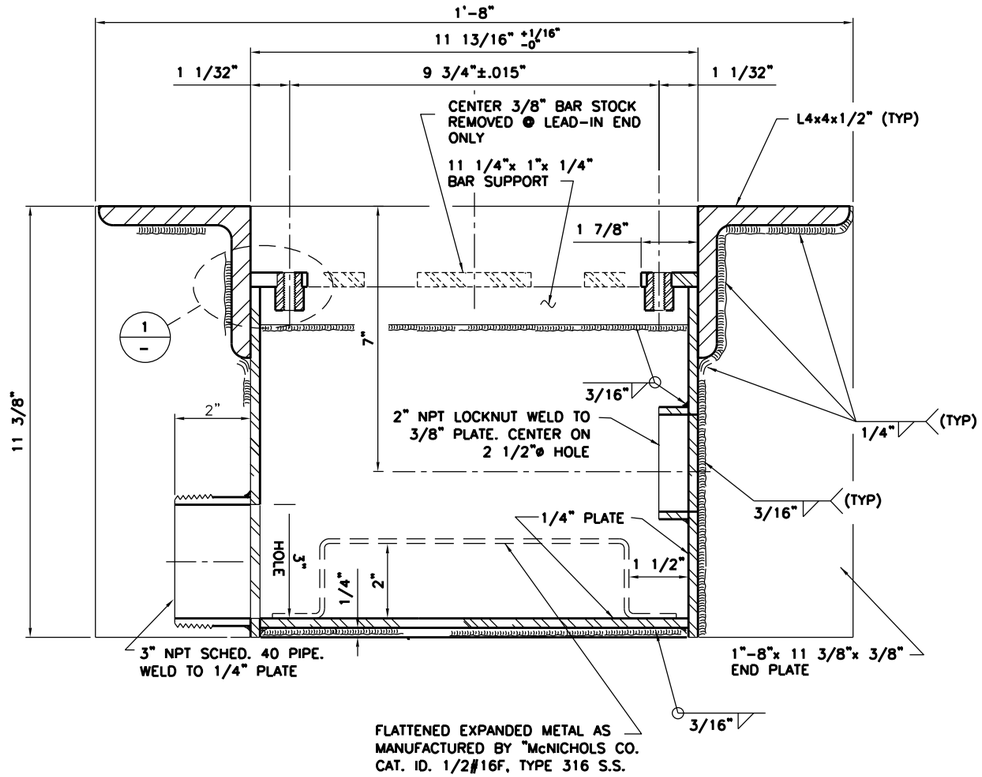

SECTION "D"-"D"

SCALE: 6"=1'-0"

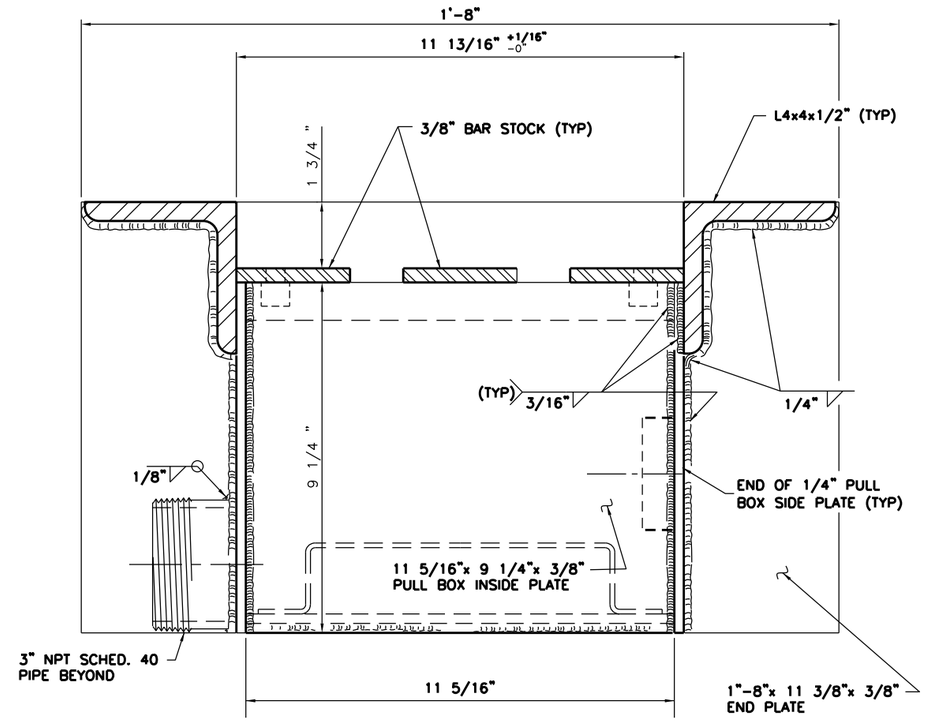

SECTION "C"-"C"

SCALE: 6"=1'-0"

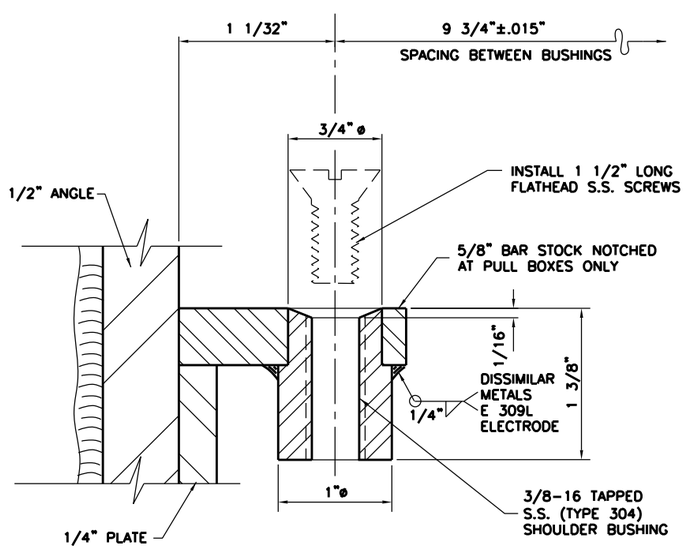

DETAIL "1"

SCALE: 2 : 1

TREADLE FRAME ASSEMBLY NOTES:

1. STRUCTURAL STEEL SHAPES, PLATES, AND BAR STOCK SHALL CONFORM TO ASTM A36, EXCEPT AS NOTED OTHERWISE.
2. TREADLE FRAME ASSEMBLY COMPONENTS SHALL BE JOINED BY WELDING PERFORMED ACCORDING TO THE NEW YORK STATE STEEL CONSTRUCTION MANUAL - 2018, INCLUDING CURRENT ADDENDA AND THE AMERICAN WELDING STAINLESS STEEL WELDING CODE D1.6.
3. ALL SHOP WELDERS MUST BE QUALIFIED BY TESTS AS DESCRIBED IN SECTION 8 OF THE NYSSCM.
4. THE MANUAL SHIELDED METAL ARC WELDING (SMAW) PROCESS MUST BE USED FOR ALL WELDING UNLESS OTHERWISE APPROVED. FOR STAINLESS STEEL TO CARBON STEEL USE THE APPROPRIATE STAINLESS STEEL ELECTRODE. FOR CARBON STEEL TO CARBON STEEL USE E7018 ELECTRODE.
5. BUSHING TOLERANCE - BUSHING PLACEMENT MUST BE WITHIN .015" OF THE INDICATED DIMENSIONS. THE ALLOWABLE TOLERANCE SHALL BE NON-ACCUMULATIVE FROM THE CENTERLINE OF THE TREADLE UNIT IN BOTH DIRECTIONS.
6. FRAME DIMENSIONAL TOLERANCES SHALL BE PLUS OR MINUS 1/16" FROM DESIGNATED DIMENSIONS EXCEPT AS OTHERWISE SHOWN. THIS TOLERANCE SHALL BE APPLIED FIRST TO OVERALL DIMENSIONS AND THEN TO INDIVIDUAL COMPONENT DIMENSION REQUIREMENTS. THE ALLOWABLE WARP OVER THE 10' DIMENSION SHALL NOT EXCEED 1/4" IN ANY DIRECTION.
7. AFTER THE TREADLE FRAME ASSEMBLY HAS BEEN COMPLETLY FABRICATED, IT WILL BE BRUSH BLASTED ACCORDING TO THE COATING MANUFACTURER'S REQUIREMENTS. AFTER INSPECTION AND APPROVAL BY THE ENGINEER, THE UNIT SHALL BE PRIMED WITH TWO COATS OF A ZINC RICH COLD GALVANIZING COMPOUND FOLLOWED BY ONE COAT OF A HIGH BUILD EPOXY. THE COATING PRODUCTS SHALL BE AS MANUFACTURED BY "PITTSBURGH PAINTS"
   - A. PRIMER: METALHIDE ONE-PAC 97-676, INORGANIC ZINC RICH PRIMER.
   - B. FINISH COAT: AQUAPON 97-LINE, HIGH BUILD, SEMI-GLOSS POLYAMIDE-EPOXY COATING.

NEW YORK STATE OF OPPORTUNITY. Thruway Authority

U.S. CUSTOMARY STANDARD SHEET

10 FOOT MODIFIED TREADLE FRAME
(SHEET 4 OF 4)
(DRAWING TR-4)

APPROVED JANUARY 1, 2020	ISSUED UNDER DB 19-002
/S/ PATRICK THOMPSON, P.E. DIRECTOR DESIGN SUPPORT SERVICES BUREAU	TA 690-03