4

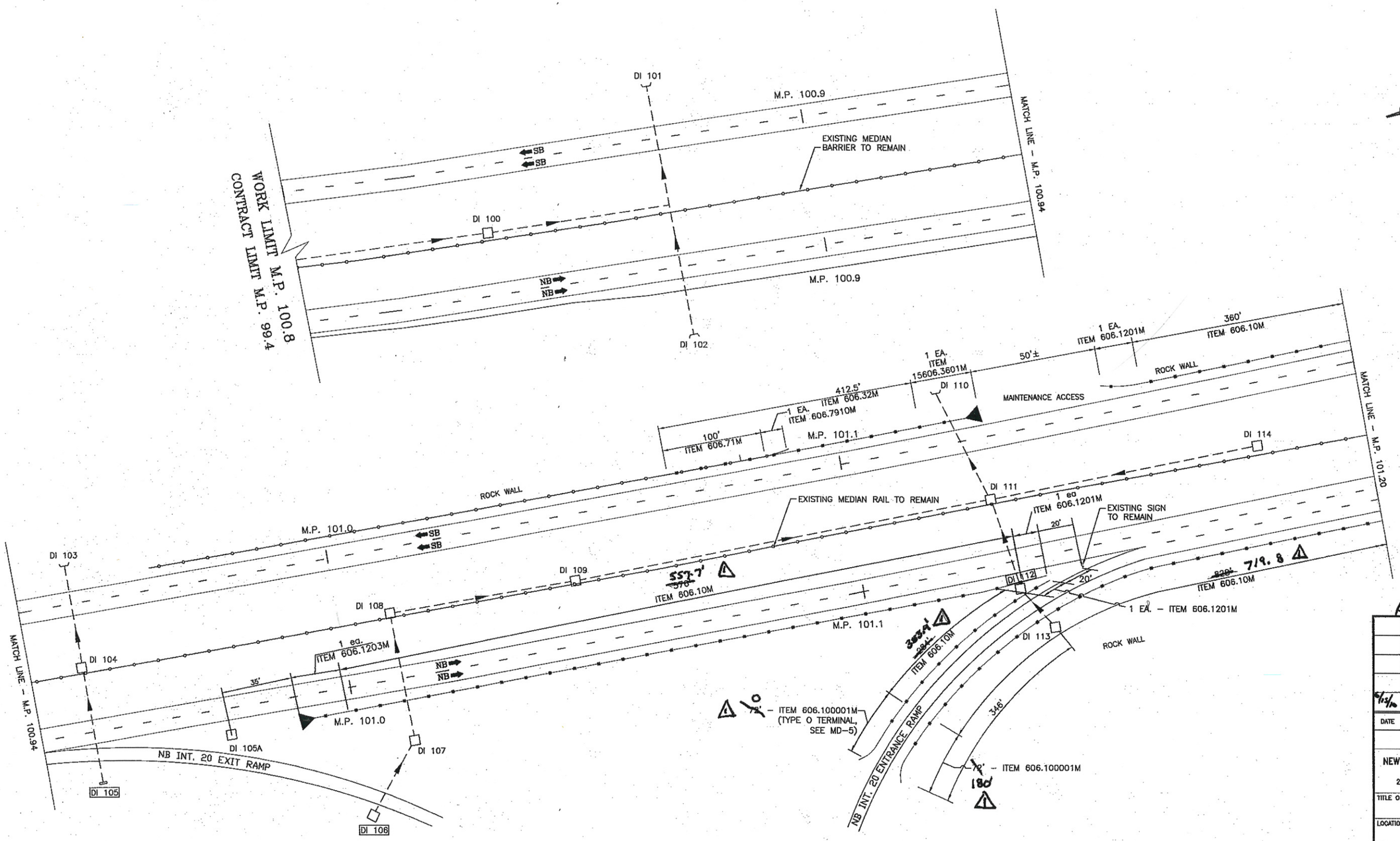

M.P. 100.80 – 101.20

SCALE: NTS

As-Built Revisions

DATE	DESCRIPTION	BY	SYM.
6/13/10	REVISED GUIDERAIL	JFitz	1

REVISIONS

NEW YORK STATE THRUWAY AUTHORITY
DEPARTMENT OF ENGINEERING SERVICES
200 SOUTHERN BLVD., ALBANY, N.Y. 12209

TITLE OF PROJECT
SAFETY IMPROVEMENTS AND MISCELLANEOUS WORK

LOCATION OF PROJECT
M.P. 100.8 TO M.P. 109.3

TITLE OF DRAWING
GENERAL PLAN

CONTRACT NUMBER: TAA 08-24

DATE: 3/13/08

DRAWING NUMBER: PL-1

IN CHARGE: J. ADAMACZAK
DESIGNED BY: G. RAYLINSKY
DRAFTED BY: CAD
CHECKED BY: G. RAYLINSKY

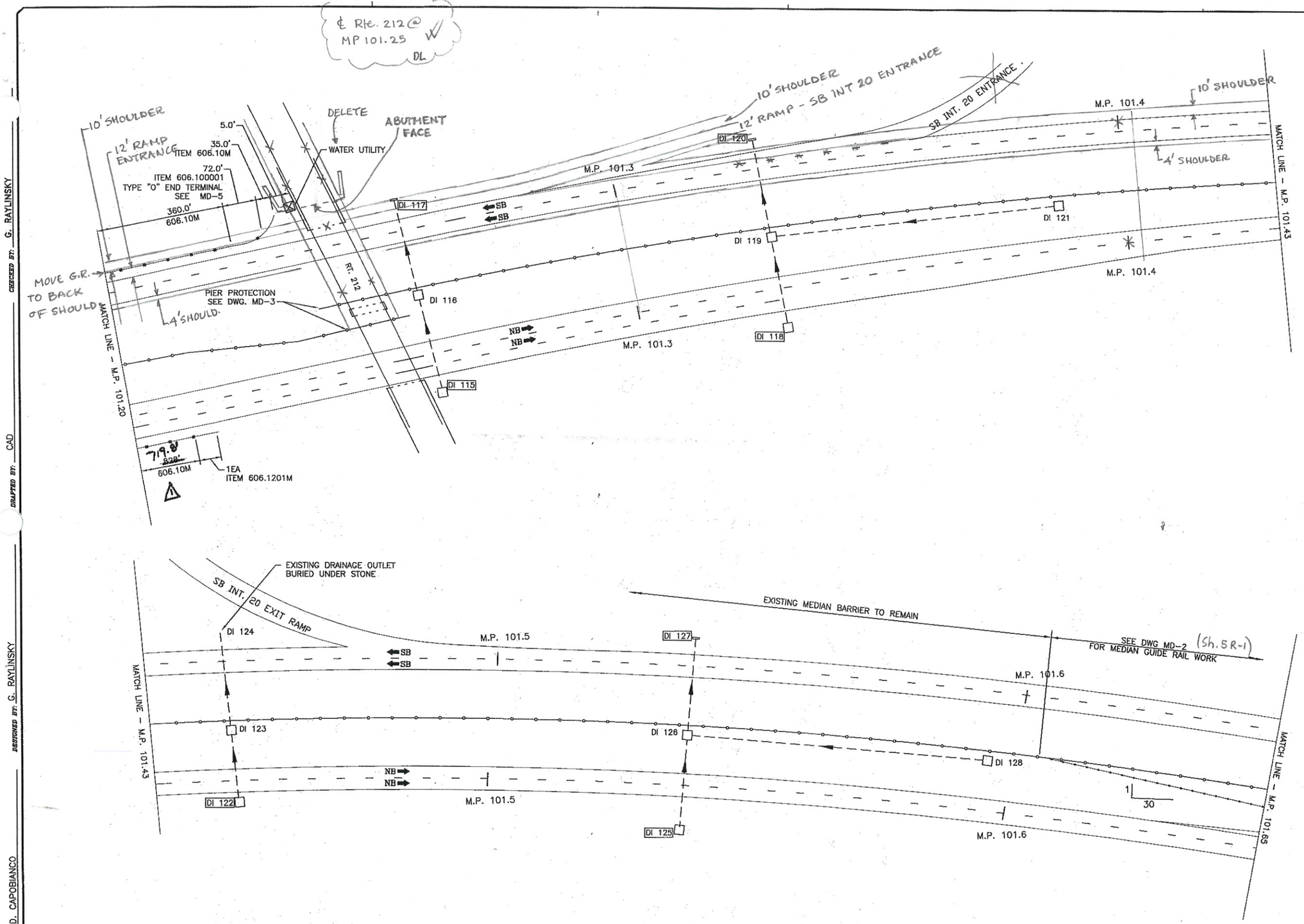

M.P. 101.20 – 101.65

SCALE: NTS

DRAFTED BY: CAD
CHECKED BY: G. RAYLINSKY
DESIGNED BY: G. RAYLINSKY
IN CHARGE: D. CAPOBIANCO

As-Built Revisions

DATE	DESCRIPTION	BY	SYM.
4/10	REVISED GUIDERAIL	JFritz	1

REVISIONS

NEW YORK STATE THRUWAY AUTHORITY
DEPARTMENT OF ENGINEERING SERVICES
200 SOUTHERN BLVD., ALBANY, N.Y. 12209

TITLE OF PROJECT
SAFETY IMPROVEMENTS AND MISCELLANEOUS WORK

LOCATION OF PROJECT
M.P. 100.8 TO M.P. 109.3

TITLE OF DRAWING
GENERAL PLAN

CONTRACT NUMBER: TAA 08-24
DATE: 3/13/08
DRAWING NUMBER: PL-2

U-turn @ 101.70
in Div. list
DL

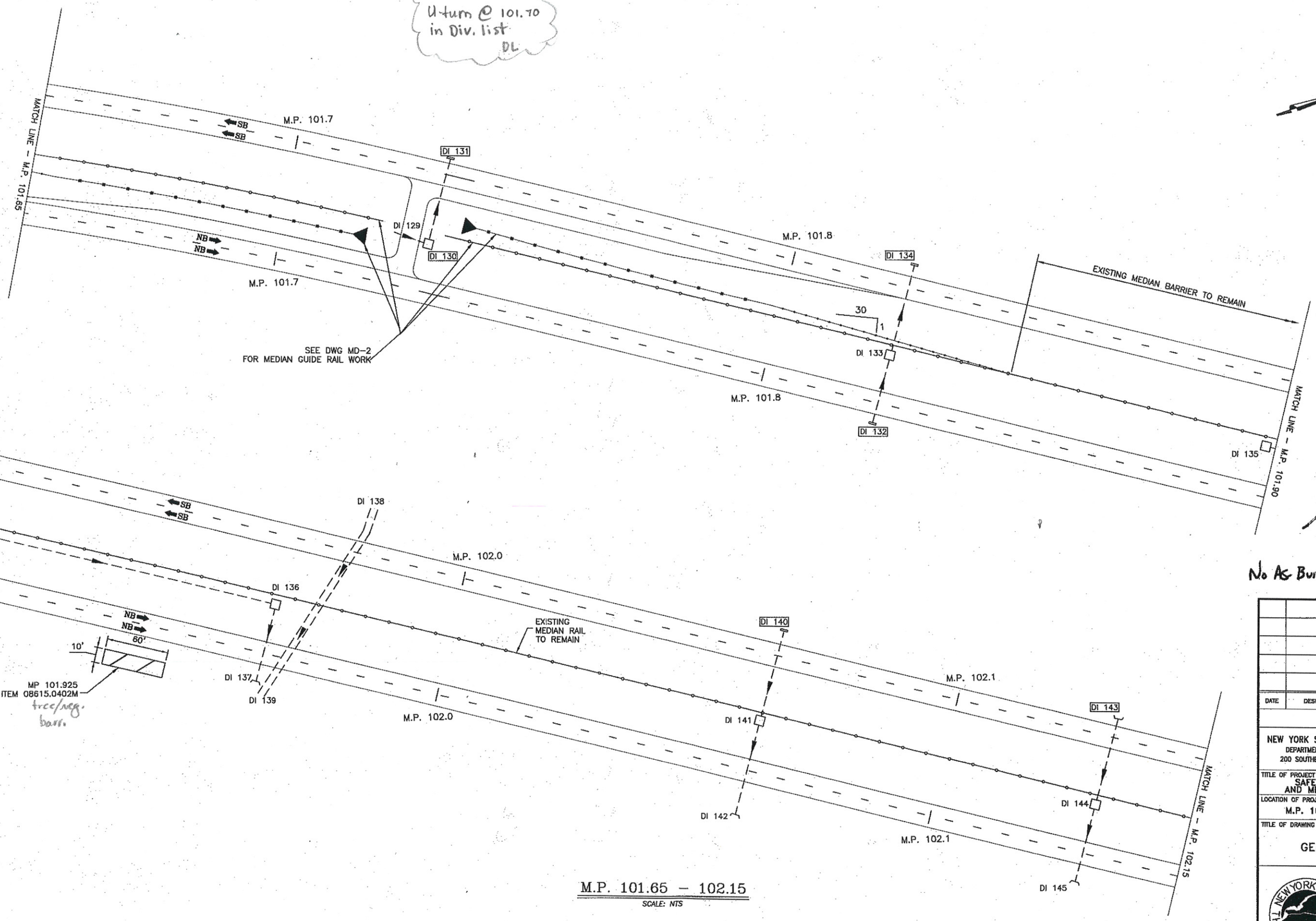

M.P. 101.65 – 102.15

SCALE: NTS

No As Built Revisions

DATE	DESCRIPTION	BY	SYM.

REVISIONS

NEW YORK STATE THRUWAY AUTHORITY
DEPARTMENT OF ENGINEERING SERVICES
200 SOUTHERN BLVD., ALBANY, N.Y. 12209

TITLE OF PROJECT
SAFETY IMPROVEMENTS AND MISCELLANEOUS WORK

LOCATION OF PROJECT
M.P. 100.8 TO M.P. 109.3

TITLE OF DRAWING
GENERAL PLAN

CONTRACT NUMBER: TAA 08-24

DATE: 3/13/08

DRAWING NUMBER: PL-3

DRAFTED BY: CAD
CHECKED BY: G. RAYLINSKY
DESIGNED BY: G. RAYLINSKY
IN CHARGE OF: D. CAPOBIANCO

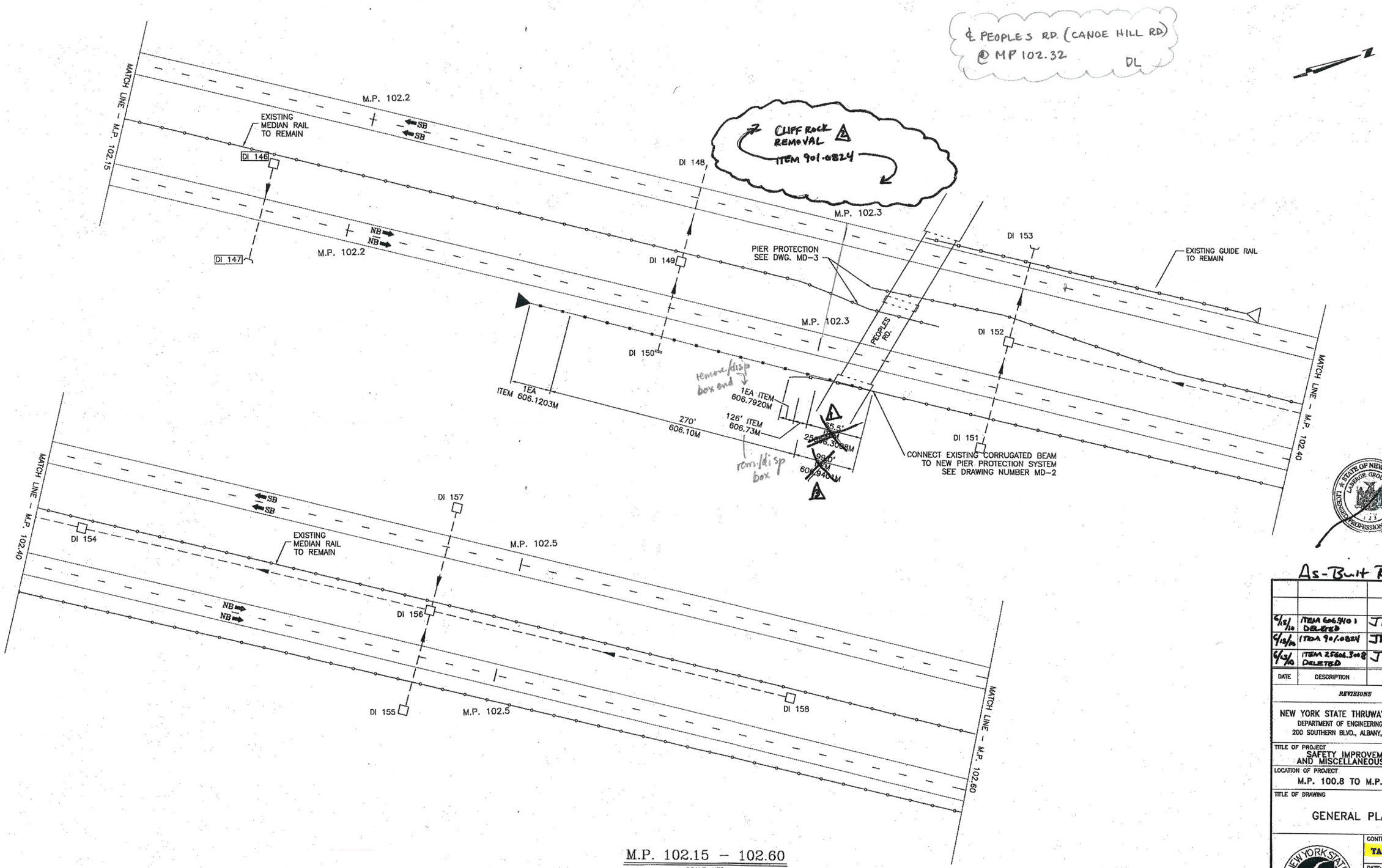

M.P. 102.15 – 102.60

SCALE: NTS

As-Built Revisions

DATE	DESCRIPTION	BY	SYM.
6/15/10	ITEM 606.9401 DELETED	J Fritz	3
6/13/10	ITEM 901.0824	J Fritz	2
6/13/10	ITEM 25606.3008 DELETED	J Fritz	1

REVISIONS

NEW YORK STATE THRUWAY AUTHORITY
DEPARTMENT OF ENGINEERING SERVICES
200 SOUTHERN BLVD., ALBANY, N.Y. 12209

TITLE OF PROJECT
SAFETY IMPROVEMENTS AND MISCELLANEOUS WORK

LOCATION OF PROJECT
M.P. 100.8 TO M.P. 109.3

TITLE OF DRAWING
GENERAL PLAN

CONTRACT NUMBER: TAA 08-24

DATE: 3/13/08

DRAWING NUMBER: PL-4

IN CHARGE OF: D. CAPOBIANCO
DESIGNED BY: G. RAYLINSKY
DRAFTED BY: CAD
CHECKED BY: G. RAYLINSKY

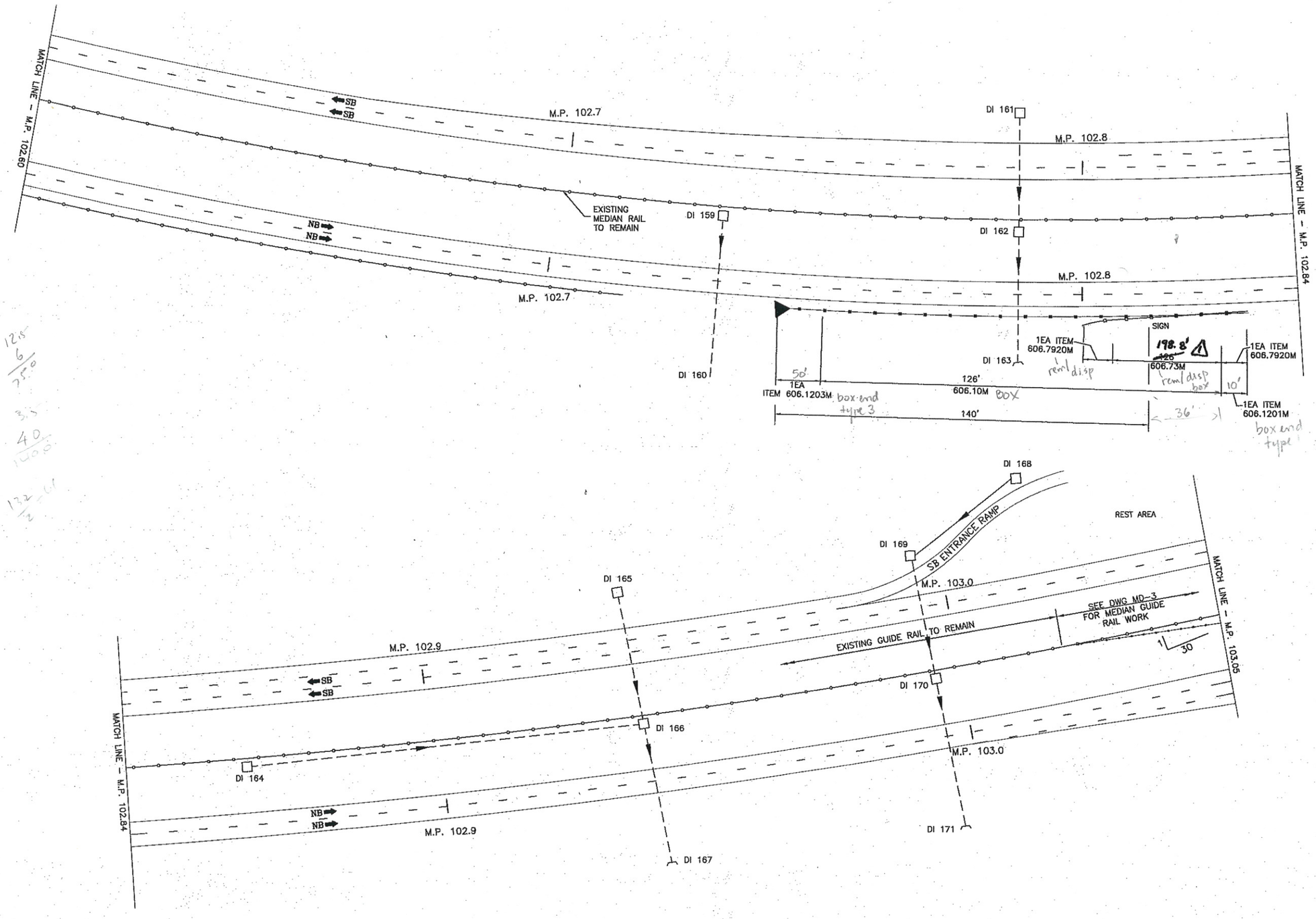

M.P. 102.60 – 103.05

SCALE: NTS

As-Built Revisions

DATE	DESCRIPTION	BY	SYM.
6/13/10	REVISED GUIDERAIL	J Fritz	1

REVISIONS

NEW YORK STATE THRUWAY AUTHORITY
DEPARTMENT OF ENGINEERING SERVICES
200 SOUTHERN BLVD., ALBANY, N.Y. 12209

TITLE OF PROJECT
SAFETY IMPROVEMENTS AND MISCELLANEOUS WORK

LOCATION OF PROJECT
M.P. 100.8 TO M.P. 109.3

TITLE OF DRAWING
GENERAL PLAN

CONTRACT NUMBER: TAA 08-24

DATE: 3/13/08

DRAWING NUMBER: PL-5

IN CHARGE OF: D. CAPOBIANCO
DESIGNED BY: G. RAYLINSKY
DRAFTED BY: CAD
CHECKED BY: G. RAYLINSKY

• U-turn @ MP 103.12 (?) on Div. list
• Bing. Maps shows U-turn ℄ ±160' FROM south side of Malden Bridge. DL

℄ MALDEN TURNPIKE @ 103.16 DL

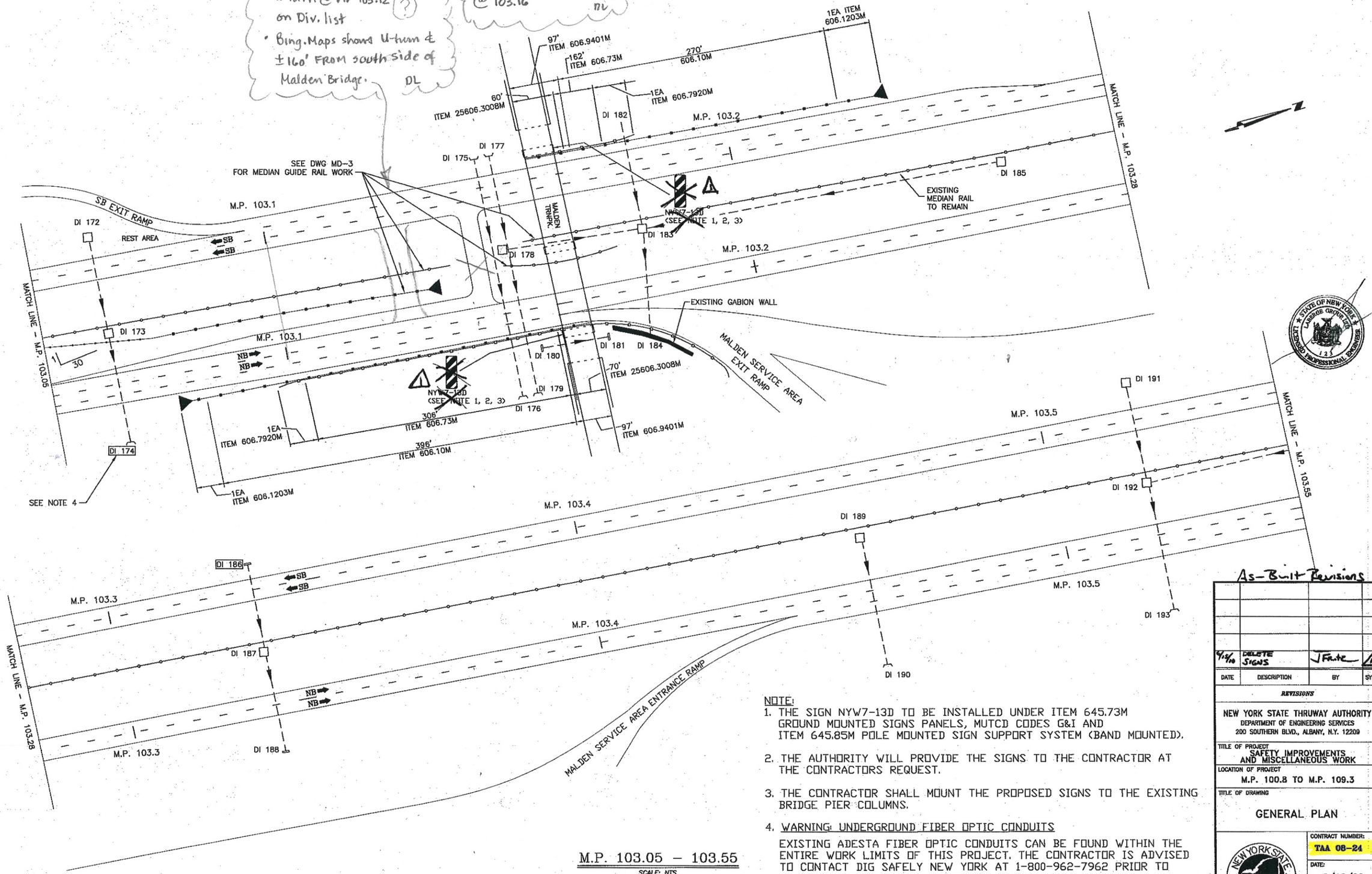

M.P. 103.05 – 103.55
SCALE: NTS

NOTE:
1. THE SIGN NYW7-13D TO BE INSTALLED UNDER ITEM 645.73M GROUND MOUNTED SIGNS PANELS, MUTCD CODES G&I AND ITEM 645.85M POLE MOUNTED SIGN SUPPORT SYSTEM (BAND MOUNTED).
2. THE AUTHORITY WILL PROVIDE THE SIGNS TO THE CONTRACTOR AT THE CONTRACTORS REQUEST.
3. THE CONTRACTOR SHALL MOUNT THE PROPOSED SIGNS TO THE EXISTING BRIDGE PIER COLUMNS.
4. WARNING: UNDERGROUND FIBER OPTIC CONDUITS
EXISTING ADESTA FIBER OPTIC CONDUITS CAN BE FOUND WITHIN THE ENTIRE WORK LIMITS OF THIS PROJECT. THE CONTRACTOR IS ADVISED TO CONTACT DIG SAFELY NEW YORK AT 1-800-962-7962 PRIOR TO ANY EXCAVATION AND/OR GUIDERAIL INSTALLATION.

As-Built Revisions

DATE	DESCRIPTION	BY	SYM.
6/15/10	DELETE SIGNS	J Fritz	

REVISIONS

NEW YORK STATE THRUWAY AUTHORITY
DEPARTMENT OF ENGINEERING SERVICES
200 SOUTHERN BLVD., ALBANY, N.Y. 12209

TITLE OF PROJECT: SAFETY IMPROVEMENTS AND MISCELLANEOUS WORK

LOCATION OF PROJECT: M.P. 100.8 TO M.P. 109.3

TITLE OF DRAWING: GENERAL PLAN

CONTRACT NUMBER: TAA 08-24

DATE: 3/13/08

DRAWING NUMBER: PL-6

IN CHARGE OF: D. CAPOBIANCO
DESIGNED BY: G. RAYLINSKY
DRAFTED BY: CAD
CHECKED BY: G. RAYLINSKY

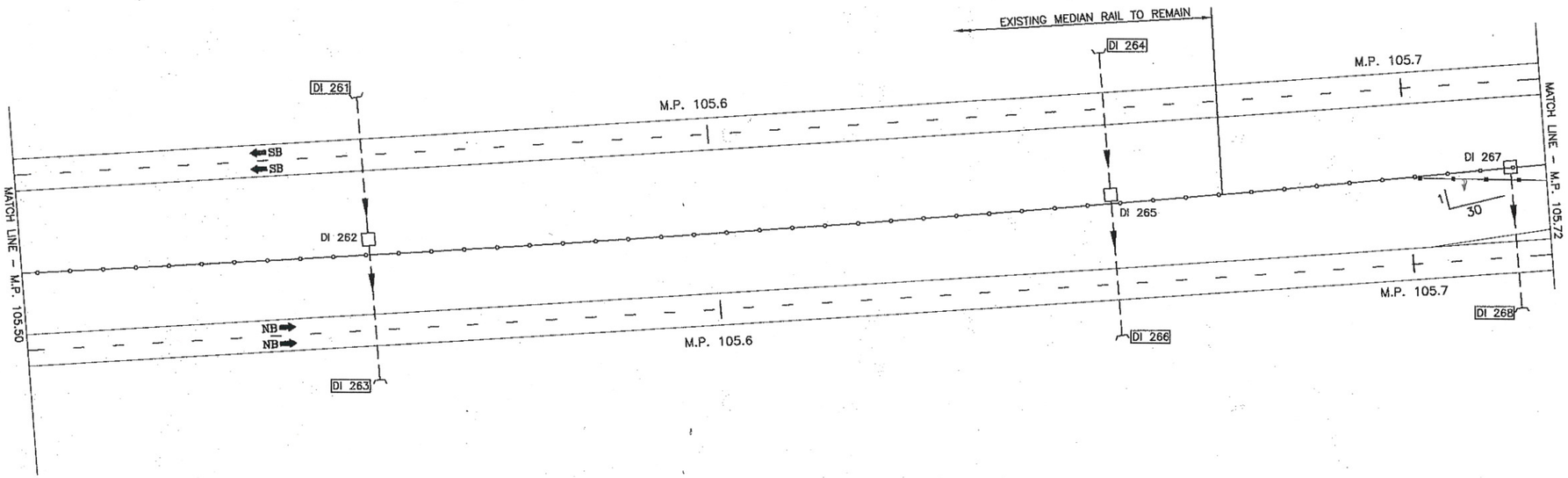

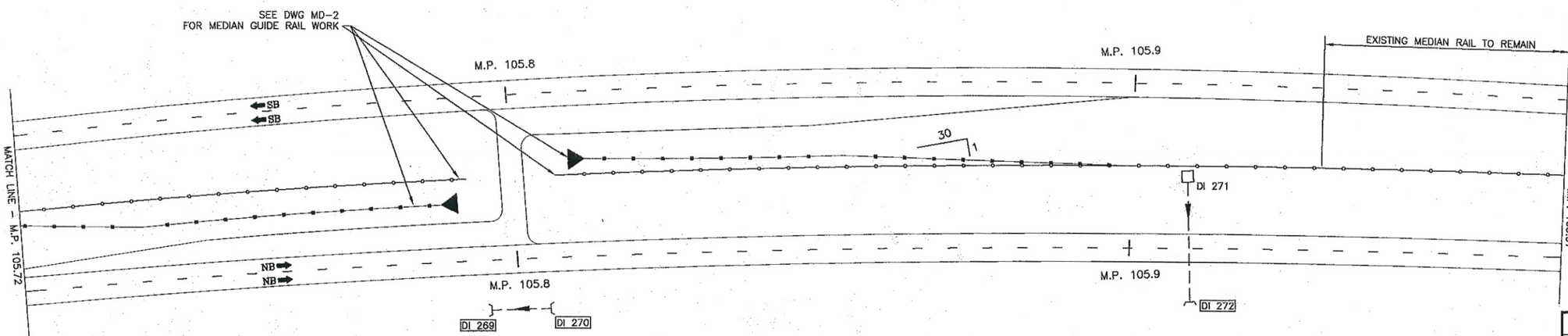

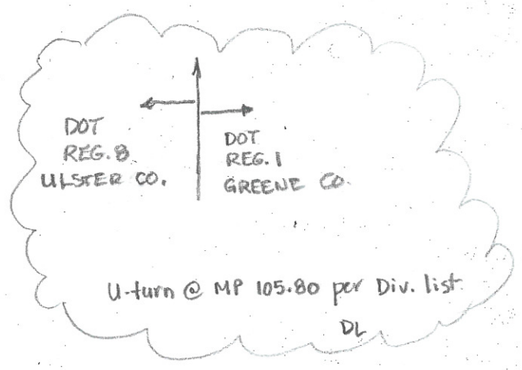

M.P. 105.50 – 105.97

SCALE: NTS

No As-Built Revisions

DATE	DESCRIPTION	BY	SYM.

REVISIONS

NEW YORK STATE THRUWAY AUTHORITY
DEPARTMENT OF ENGINEERING SERVICES
200 SOUTHERN BLVD., ALBANY, N.Y. 12209

TITLE OF PROJECT
SAFETY IMPROVEMENTS AND MISCELLANEOUS WORK

LOCATION OF PROJECT
M.P. 100.8 TO M.P. 109.3

TITLE OF DRAWING
GENARAL PLAN

CONTRACT NUMBER: TAA 08-24

DATE: 3/13/08

DRAWING NUMBER: PL-11

DRAFTED BY: CAD
DESIGNED BY: G. RAYLINSKY
CHECKED BY: J. ADAMCZAK
IN CHARGE OF: D. CAPOBIANCO

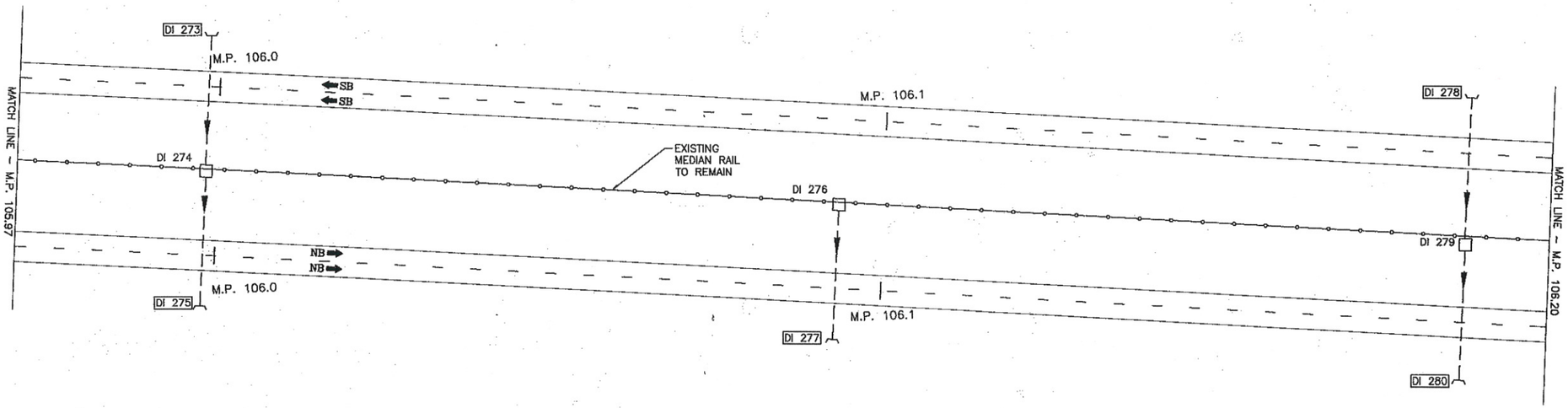

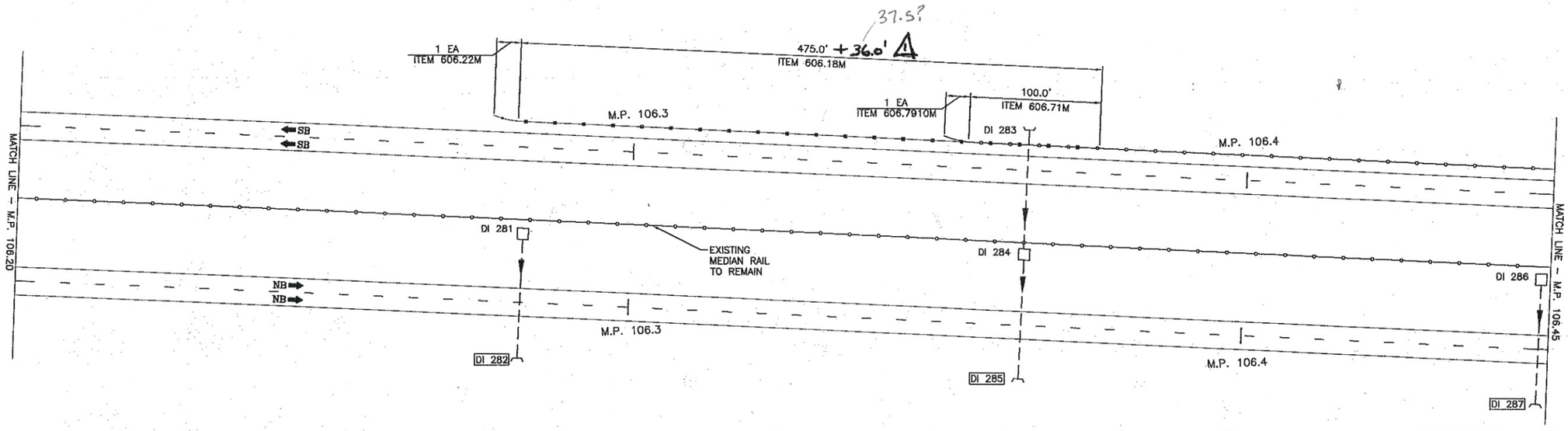

475
36
511

M.P. 105.97 – 106.45

SCALE: NTS

As-Built Revisions

DATE	DESCRIPTION	BY	SYM.
4/15/10	ADDITIONAL RAIL INSTALLED	JFritz	Δ

REVISIONS

NEW YORK STATE THRUWAY AUTHORITY
DEPARTMENT OF ENGINEERING SERVICES
200 SOUTHERN BLVD., ALBANY, N.Y. 12209

TITLE OF PROJECT
SAFETY IMPROVEMENTS
AND MISCELLANEOUS WORK

LOCATION OF PROJECT
M.P. 100.8 TO M.P. 109.3

TITLE OF DRAWING
GENERAL PLAN

CONTRACT NUMBER: TAA 08-24
DATE: 3/13/08
DRAWING NUMBER: PL-12

DRAFTED BY: CAD
CHECKED BY: J. ADAMCZAK
DESIGNED BY: G. RAYLINSKY
IN CHARGE OF: D. CAPOBIANCO

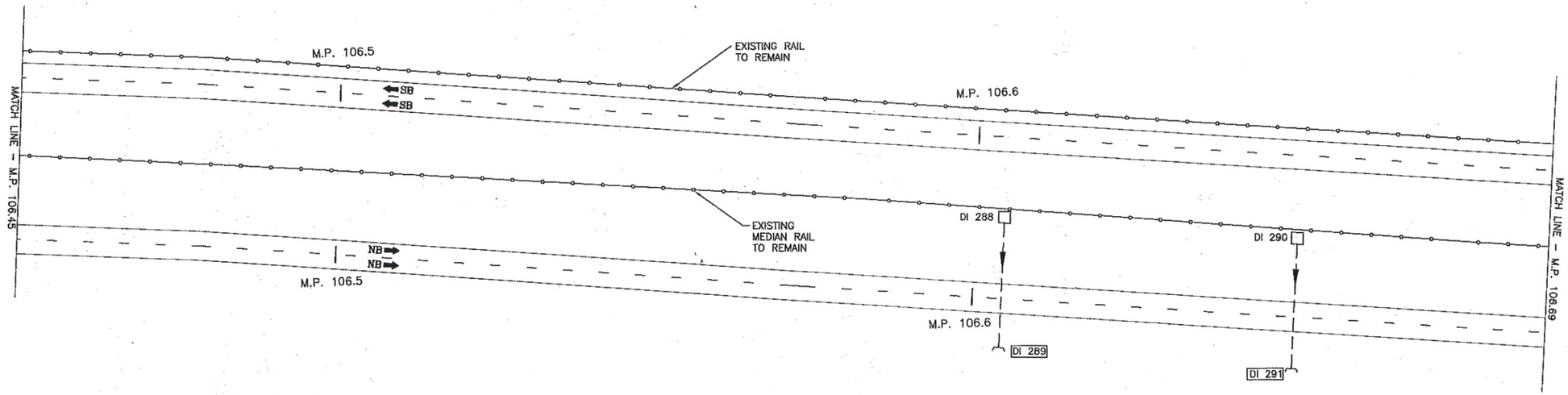

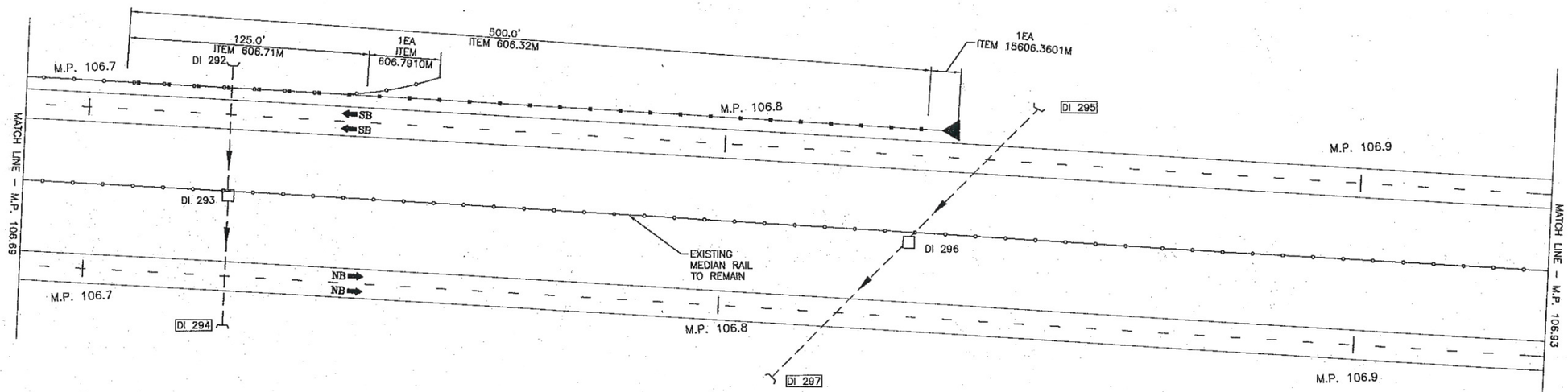

M.P. 106.45 – 106.93

SCALE: NTS

No As-Built Revisions

DATE	DESCRIPTION	BY	SYM.

REVISIONS

NEW YORK STATE THRUWAY AUTHORITY
DEPARTMENT OF ENGINEERING SERVICES
200 SOUTHERN BLVD., ALBANY, N.Y. 12209

TITLE OF PROJECT
SAFETY IMPROVEMENTS AND MISCELLANEOUS WORK

LOCATION OF PROJECT
M.P. 100.8 TO M.P. 109.3

TITLE OF DRAWING
GENRAL PLAN

CONTRACT NUMBER: TAA 08-24

DATE: 3/13/08

DRAWING NUMBER: PL-13

DRAFTED BY: CAD
DESIGNED BY: G. RAYLINSKY
CHECKED BY: J. ADAMCZAK
IN CHARGE OF: D. CAPOBIANCO

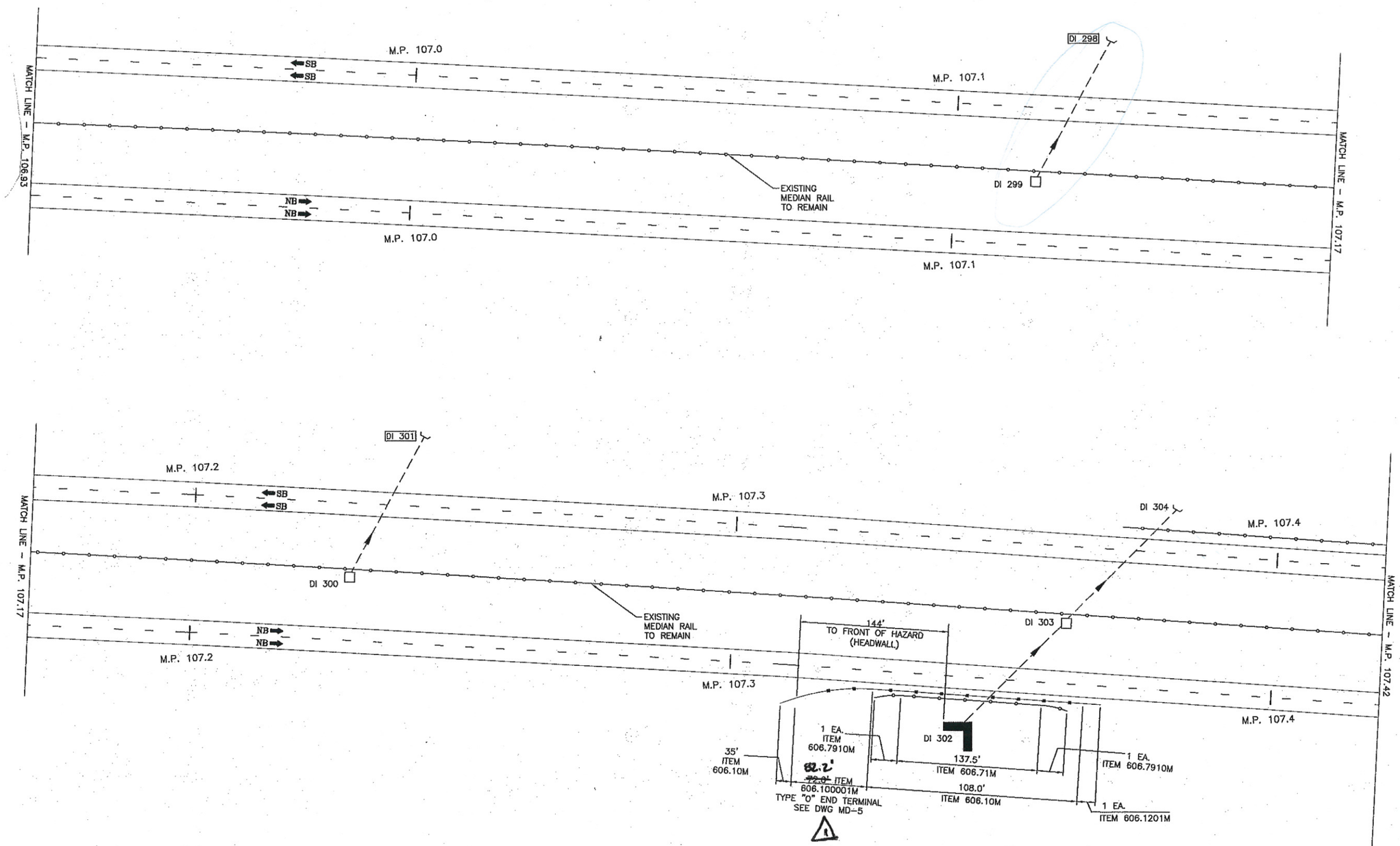

M.P. 106.93 – 107.42

SCALE: NTS

DRAFTED BY: CAD

DESIGNED BY: G. RAYLINSKY

CHECKED BY: J. ADAMCZAK

IN CHARGE OF: D. CAPOBIANCO

As-Built Revisions

DATE	DESCRIPTION	BY	SYM.
4/1/10	REVISED GUIDERAIL	JFurtz	1

REVISIONS

NEW YORK STATE THRUWAY AUTHORITY
DEPARTMENT OF ENGINEERING SERVICES
200 SOUTHERN BLVD., ALBANY, N.Y. 12209

TITLE OF PROJECT
PAVEMENT RESURFACING, 1R MILL & INLAY

LOCATION OF PROJECT
M.P. 100.8 TO M.P. 109.3

TITLE OF DRAWING
GENERAL PLAN

CONTRACT NUMBER: TAA 08-24

DATE: 3/13/08

DRAWING NUMBER: PL-14

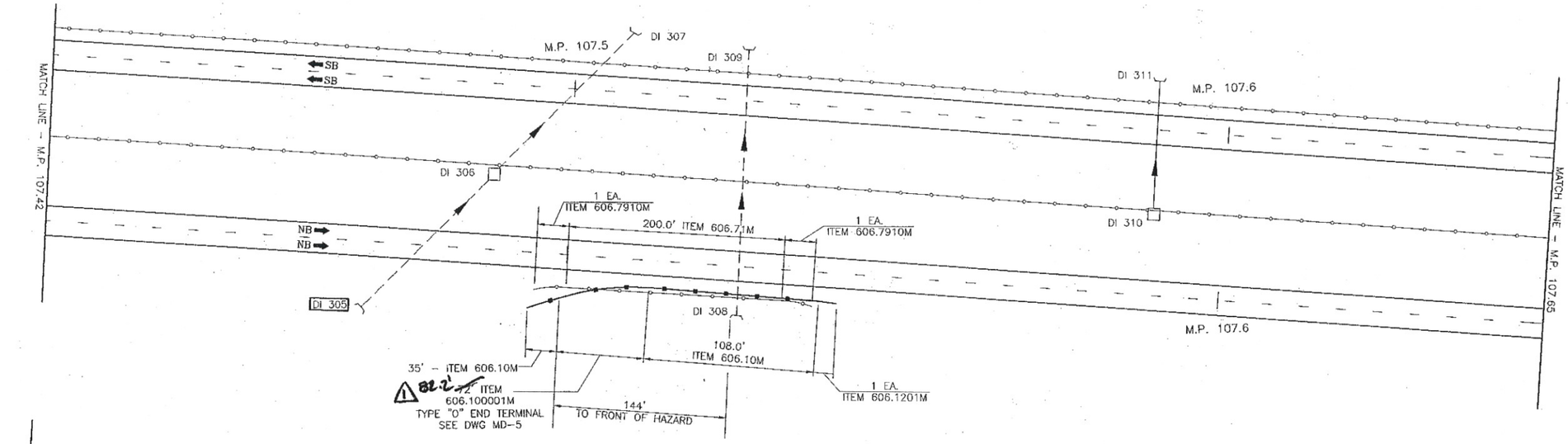

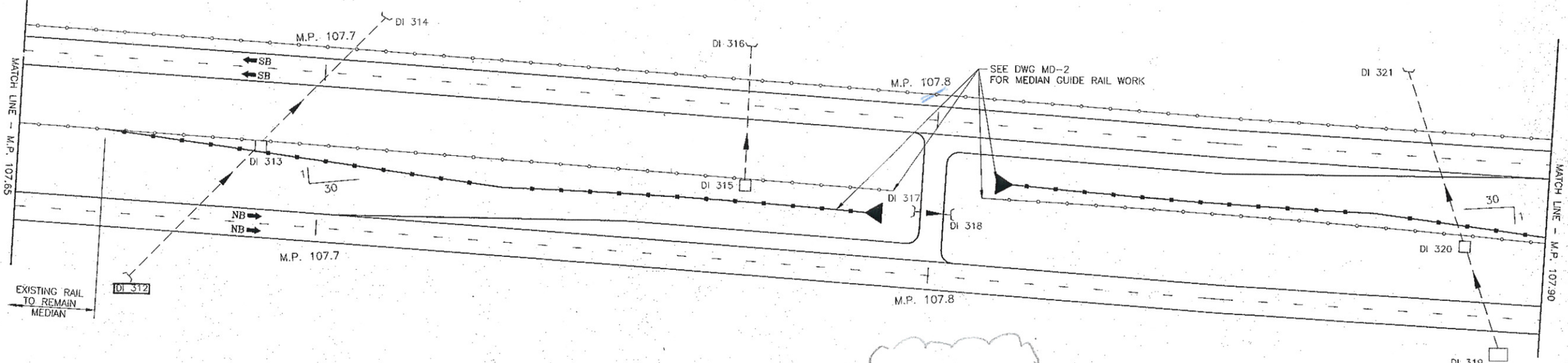

U-turn @ MP 107.78
per Div. list
DL

M.P. 107.42 – 107.90

SCALE: NTS

"As-Built Revisions"

DATE	DESCRIPTION	BY	SYM.
4/15/10	REVISED. GUIDERAIL	J FRITZ	1

REVISIONS

NEW YORK STATE THRUWAY AUTHORITY
DEPARTMENT OF ENGINEERING SERVICES
200 SOUTHERN BLVD., ALBANY, N.Y. 12209

TITLE OF PROJECT
SAFETY IMPROVEMENTS
AND MISCELLANEOUS WORK

LOCATION OF PROJECT
M.P. 100.8 TO M.P. 109.3

TITLE OF DRAWING
PLAN

CONTRACT NUMBER: TAA 08-24

DATE: 3/13/08

DRAWING NUMBER: PL-15

DESIGNED BY: G. RAYLINSKY
DRAFTED BY: CAD
CHECKED BY: G. RAYLINSKY
IN CHARGE OF: D. CAPOBIANCO

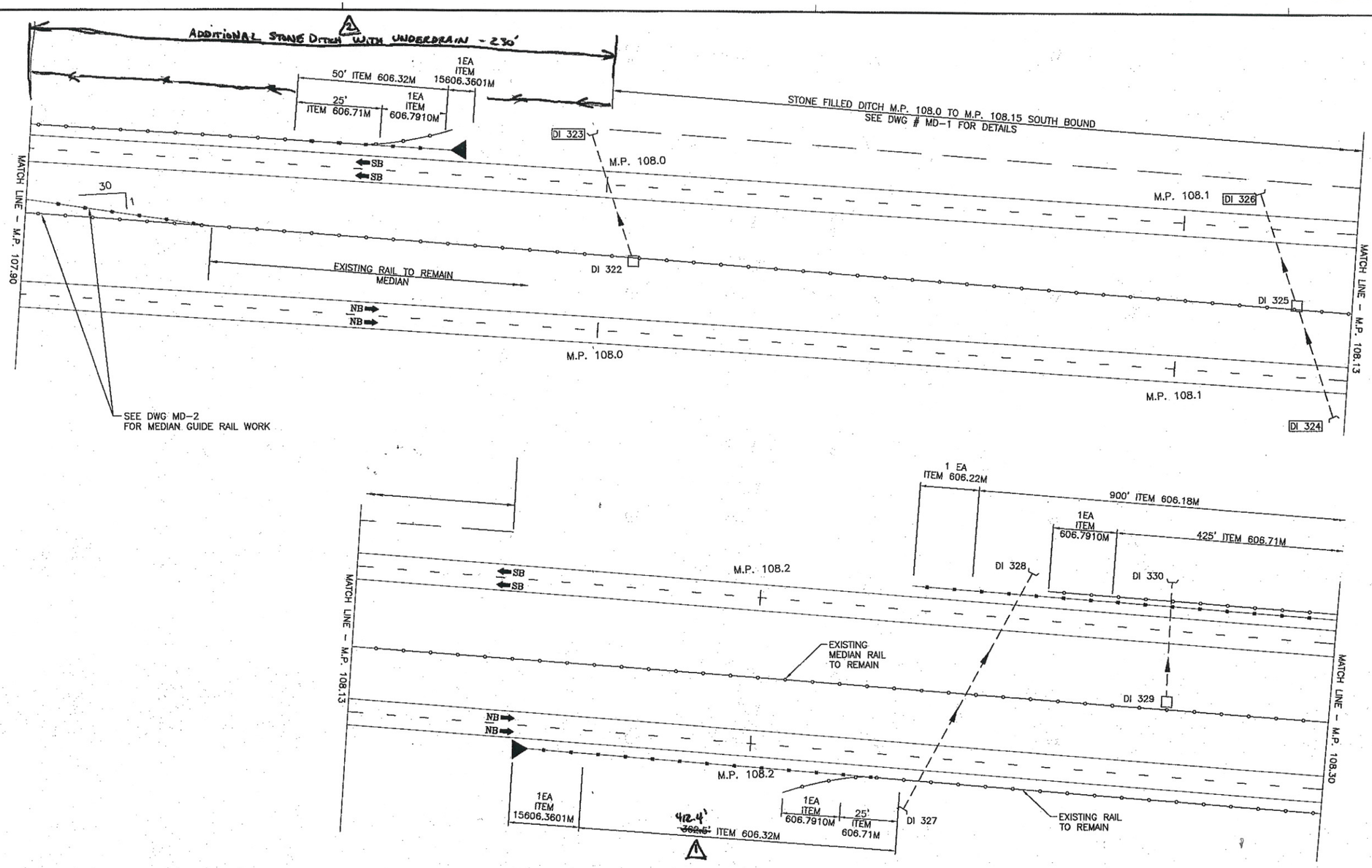

M.P. 107.90 – 108.30

SCALE: NTS

As-Built Revisions

DATE	DESCRIPTION	BY	SYM.
6/12/10	NEW STONE DITCH W/ U.D.	J Frate	2
6/15/10	REVISED GUIDERAIL	J Frate	1

REVISIONS

NEW YORK STATE THRUWAY AUTHORITY
DEPARTMENT OF ENGINEERING SERVICES
200 SOUTHERN BLVD., ALBANY, N.Y. 12209

TITLE OF PROJECT
SAFETY IMRPOVEMENTS AND MISCELLANEOUS WORK

LOCATION OF PROJECT
M.P. 100.8 TO M.P. 109.3

TITLE OF DRAWING
GENERAL PLAN

CONTRACT NUMBER: TAA 08-24

DATE: 3/13/08

DRAWING NUMBER: PL-16

IN CHARGE OF: D. CAPOBIANCO
DESIGNED BY: G. RAYLINSKY
DRAFTED BY: CAD
CHECKED BY: J. ADAMCZAK

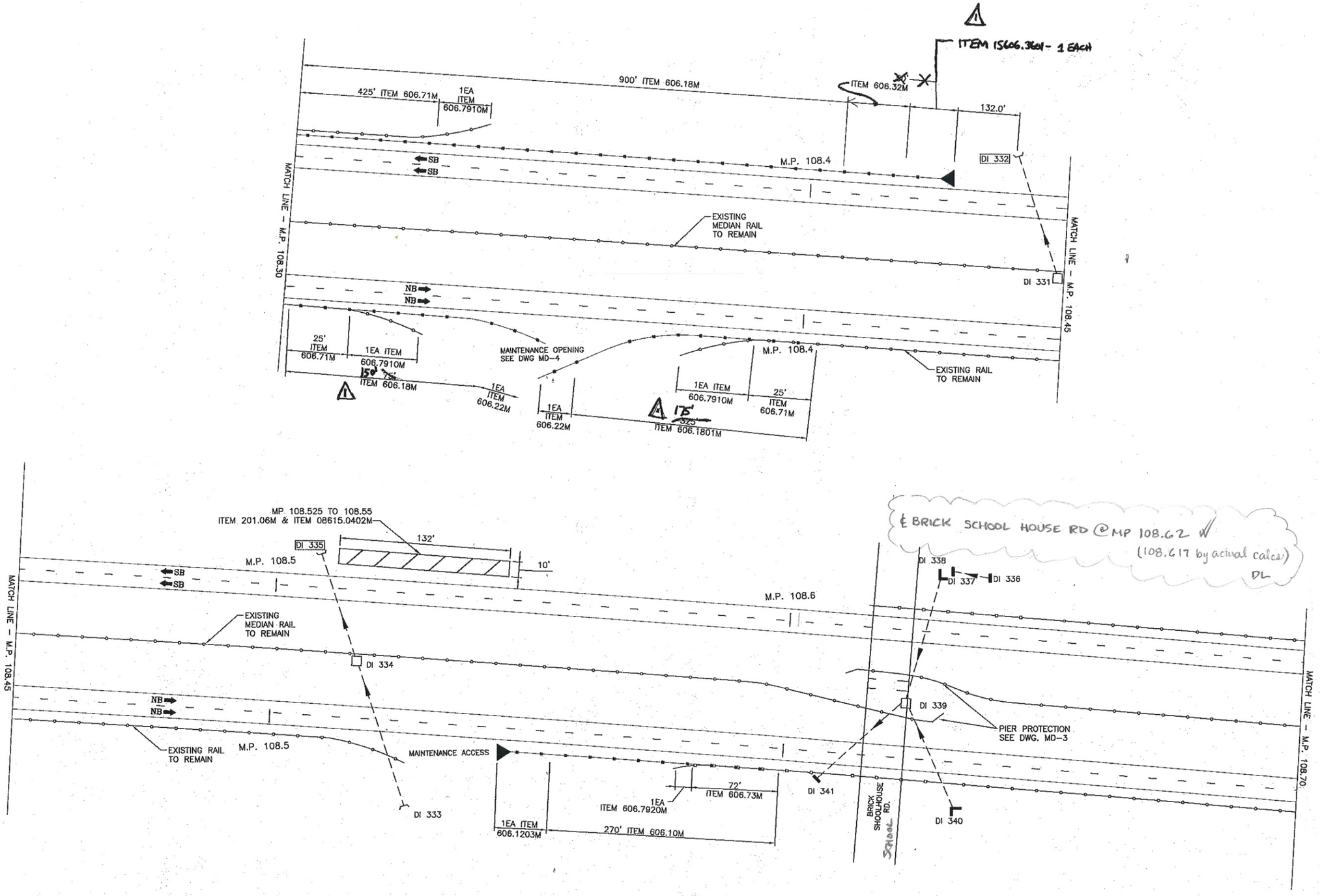

M.P. 108.30 – 108.70

SCALE: NTS

As-Built Revisions

DATE	DESCRIPTION	BY	SYM.
6/13/16	REVISED GUIDERAIL	JFritz	1

REVISIONS

NEW YORK STATE THRUWAY AUTHORITY
DEPARTMENT OF ENGINEERING SERVICES
200 SOUTHERN BLVD., ALBANY, N.Y. 12209

TITLE OF PROJECT
SAFETY IMPROVEMENTS AND MISCELLANEOUS WORK

LOCATION OF PROJECT
M.P. 100.8 TO M.P. 109.3

TITLE OF DRAWING
GENRAL PLAN

CONTRACT NUMBER: TAA 08-24

DATE: 3/13/08

DRAWING NUMBER: PL-17

IN CHARGE OF: D. CAPOBIANCO
DESIGNED BY: G. RAYLINSKY
DRAFTED BY: CAD
CHECKED BY: G. RAYLINSKY

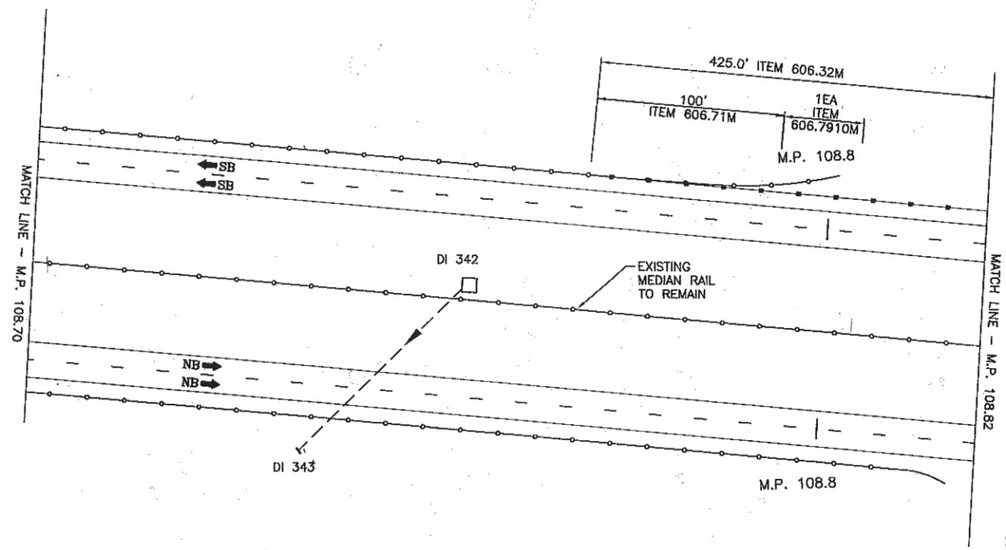

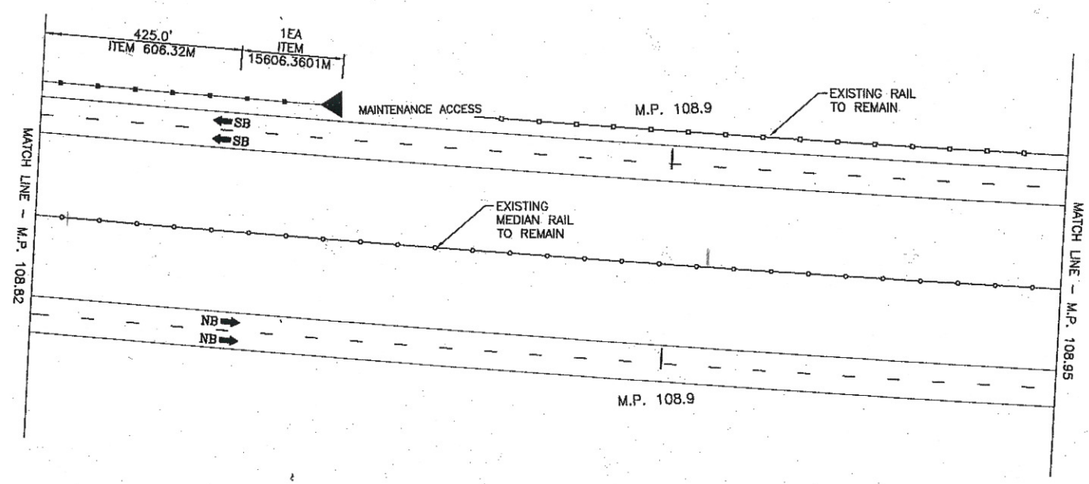

M.P. 108.70 – 108.95

SCALE: NTS

No As-Built Revisions

DATE	DESCRIPTION	BY	SYM.

REVISIONS

NEW YORK STATE THRUWAY AUTHORITY
DEPARTMENT OF ENGINEERING SERVICES
200 SOUTHERN BLVD., ALBANY, N.Y. 12209

TITLE OF PROJECT
SAFETY IMPROVEMENTS AND MISCELLANEOUS WORK

LOCATION OF PROJECT
M.P. 100.8 TO M.P. 109.3

TITLE OF DRAWING
GENERAL PLAN

CONTRACT NUMBER: TAA 08-24

DATE: 3/13/08

DRAWING NUMBER: PL-18

DRAFTED BY: CAD
CHECKED BY: J. ADAMCZAK
DESIGNED BY: G. RAYLINSKY
IN CHARGE BY: D. CAPOBIANCO