PROPOSAL

FOR

TAA 16-27R D214482

SAFETY UPGRADES, CULVERT EXTENSIONS,
DRAINAGE IMPROVEMENTS AND MISCELLANEOUS
WORK FROM MP 100.8 TO MP 109.3

BOOK 1 OF 1

THIS BOOK CONTAINS SPECIFICATIONS AND
BID PROPOSAL WORKSHEETS.

SUBMITTED IN ACCORDANCE WITH THE NEW YORK STATE DEPARTMENT OF TRANSPORTATION STANDARD SPECIFICATIONS OFFICIALLY ADOPTED SEPTEMBER 1, 2016 EXCEPT AS MODIFIED IN THE PLANS AND/OR PROPOSAL AND ANY CHANGES WITH ARTICLE 2, TITLE 9 OF THE PUBLIC AUTHORITIES LAW.

LETTING OF

NOVEMBER 2, 2016

11:00 A.M.

NEW YORK STATE OF OPPORTUNITY. | Thruway Authority | Canal Corporation

200 Southern Blvd., Albany, NY 12209

NOTICE
TO
BIDDERS

In addition to the bid deposit requirement, this Proposal shall be accompanied by a Statement of Surety's Consent on the form furnished by the Authority. (See last page).

BIDDERS ARE SUBJECT TO LOSS OF BID DEPOSIT FOR FAILURE TO OBTAIN PROPER BONDING.

Thruway Authority/Canal Corporation
Designated Contacts

Pursuant to NYS Finance Law Sections 139-j and 139-k, the following people are the designated contacts for this procurement process:

For all procurement contract process related questions:

- Michael W. Doyle
  Office of Capital Program and Contracts Management
  (518) 436-2902

For all technical or engineering related questions:

- Ameeruddin Audil
  Project Designer
  (518) 471-4254
  Ameeruddin.audil@thruway.ny.gov

- Al Mastroianni, P.E.
  Design Bureau Director
  (518) 471-4264
  Albert.Mastroianni@thruway.ny.gov

For more information about NYS Finance Law Sections 139-j and 139-k, please see the New York State Thruway Authority / Canal Corporation Guidelines for Lobbying included in this Proposal.

NEW YORK STATE
THRUWAY AUTHORITY

NOTICE TO BIDDERS

Sealed bids must be hand delivered, or delivered by first class mail, USPS Express or Priority Mail, or overnight delivery service (e.g., FedEx, UPS) to the New York State Thruway Authority Headquarters Building, at the following address only: New York State Thruway Authority, 200 Southern Boulevard Albany, NY 12209.

Sealed bids should not be sent or delivered to any other address or location, and the Authority is not responsible for any late deliveries or misdirected bids.

Regardless of the delivery method selected, all sealed bids must be delivered by 11:00 AM, on Wednesday, November 2, 2016, where they will be opened publicly and read aloud. Any bids sent or delivered to an address or location other than the one specified above, or received after this time, will not be accepted.

> Contract TAA 16-27R / D214482 – Safety Upgrades, Culvert Extensions, Drainage Improvements and Miscellaneous Work from MP 100.8 – MP 109.3 in Ulster and Greene Counties in accordance with the Plans and Specifications.

Your bid must be secured with either a Bid Bond or a Bid Deposit. A Bid Bond must be in the amount of 25% of the total bid and must be on the Authority's Bid Bond Form (TA-44117) which is included in the Proposal. A Bid Deposit must be a certified check or cashier's check made payable to the New York State Thruway Authority in the amount of **$250,000.00.**

Plans, proposals, and information on how to download Contract Bid Data are available on the Authority's Website at www.thruway.ny.gov.

SPECIAL NOTE

The New York State Thruway Authority has discontinued the practice of reproducing and furnishing full-size and half-size plans to Contractors after contract award. Contractors shall be responsible for their own hard copies of plans and proposals at no additional cost to the Authority.

New York State Can Help You Secure Surety Bonding

The NYS Surety Bond Assistance Program (NYSBAP) provides technical and financial assistance to help contractors secure surety bonding. Contractors may be eligible to receive a guarantee of up to 30% to secure a surety bond line, bid bond or a performance and payment bond on State projects. Training is also available to contractors requiring technical support on how to become bond-ready. For more information and to fill out a NYSBAP application, visit http://esd.ny.gov/BusinessPrograms/BondingAssistance.html or contact Ms. Huey-Min Chuang at Empire State Development at 212-803-3238 or BAP@esd.ny.gov.

SPECIAL NOTE
REQUEST FOR INFORMATION (RFI)

A **request for information (RFI)** is a written process used to clarify a detail, specification, or note in the contract documents, provide notification of a possible error or omission, or request a minor modification due to possible unforeseen issues that may occur during construction. During the period between project advertisement and award of contract, the Contractor shall submit all RFIs to the appropriate "Designated Contact" listed in the Proposal. The Contractor's RFI to Engineering Design shall follow the same general format as the Authority's Contractor Request for Information Form (TA-N44136-9) used during construction. The form shall be filled out as completely and accurately as possible and numbered sequentially, if needed. Any supporting information that may help describe the issue more clearly, as well as any suggestions or recommendations for possible resolution, should be provided.

TA-N44136-9 (12/2012)

CONTRACTOR REQUEST FOR INFORMATION

New York State Thruway Authority • New York State Canal Corporation

Purpose: This form is completed by a Project's Construction Supervisor upon receipt of a Contractor's request for information when further information is needed to respond to the Contractor's request.

INSTRUCTIONS:

- *Construction Supervisor:* Complete Section I upon receiving the Contractor's written request for information. This form, along with the Contractor's request, is forwarded to the appropriate Thruway Bureau (Design or Maintenance) with a copy being sent to the Office of Construction Management's Liaison.
- *Receiving Thruway Bureau:* Completes Section II, providing the requested information, and returns the form to the Construction Supervisor with a copy being sent to the Office of Construction Management's Liaison.

Section I Request for Information

Construction Supervisor	Phone No. ( ) -	RFI No.

Project Description	Contract TA No. TA
	Contract D No. D

Trades (if applicable)	Contract Drawing No.	Specifications Section	Contractor's Reference No.

Request Date	Requested Response Date	Requested By	Company

Detailed Description of Issue (use additional sheets if necessary)

Proposed Solution (use additional sheets if necessary)

SAMPLE FORMAT

Section II Request Response

Receipt Date	Response Date	Response By	Thruway Bureau

Response (use additional sheets if necessary)

Attached Document(s) Description

New York State Thruway Authority

Contract No. TAA 16-27R

TABLE OF CONTENTS

PROJECT INFORMATION

Proposal Title Sheet 1
Pre-Award Notice / Contract Award 2
Pre-Bid Inspection / Preconstruction Meeting / Withdrawal of Bid 3
Quantity Sheet Summary for Proposal 4
"Be Prepared To Stop" Signing for Stationary Work Zones 8
"Uneven Lanes" Signing 9
Work to be Done 10
Schedule and Suspension of Work 11
Traffic Management Tables 15
Project Notes 19
Specialty Items 20
Supplemental Information Available To Bidders 21

REVISIONS TO NYSDOT STANDARD SPECIFICATIONS

NYSTA Addendum to the Standard Specifications 22

SPECIAL SPECIFICATIONS

Special Note — Special Specification Pay Item Numbers 23
Project Special Specifications 24

SPECIAL NOTES

Confidential Information 83
Control of Materials 86
Availability of Electronic Bid Data 87
Requirements for Contractor's Utilization of Areas Outside of the Right-of-Way 88
Compliance with State Pollutant Discharge Elimination System (SPDES) Regulations 89
Diesel Emission Reduction Act (DERA) Regulatory Compliance 90
Green Construction Requirements 91
"Generator Knowledge" for Disposal of Treated Wood 94
Forest Insect Disease Control 95
Marker Relocation During Construction 97
Project Special Notes 98

AFFIRMATIVE ACTION REQUIREMENTS

Goals for Disadvantaged/Minority/Women's Business Enterprise (D/W/MBE) Participation 109
Equal Employment Opportunity Requirements – State 110
Training Special Provisions – State Funded 117
Non-FA Affirmative Action Requirements 122
Progress Payments – OEOC Reports 127
Utilization Plan for All Subcontractors (TA-W1022-9) 128
Instructions for the Manual Completion of the Employment Utilization Report (TA-W1017-9) 130
Monthly Employment Utilization (TA-W1017-9) 132
Payments to D/M/WBE Subcontracting Firms (TA-W1023-9) 133

STATE WAGE RATE INFORMATION

Wage Rates / Special Notice to Bidders in Relation to Overtime Dispensation 134
Special Note: State Prevailing Wage Rates 135
State Wage Rates 136

SAMPLE AGREEMENT

New York State Thruway Authority Sample Agreement 164

BID PROPOSAL

Itemized Proposal 173
Non-Collusive Bidding Certification 199
Iran Divestment Certification 200
MacBride Fair Employment Principals Certification 201
Signature Sheet 202
Bid Bonds 203
New York State Thruway Authority Guidelines for Lobbying 205
Disclosure of Prior Non-Responsibility Determinations 208
Certificate of Compliance (TA-W2111-9) 209
Amendment Acknowledgment 210
Statement of Surety's Consent 211

PROJECT INFORMATION

TAA 16-27R
D214482

NEW YORK STATE THRUWAY AUTHORITY

DEPARTMENT OF ENGINEERING

PROPOSAL ESTIMATE FOR

SAFETY UPGRADES, CULVERT EXTENSIONS, DRAINAGE

IMPROVEMENTS AND MISCELLANEOUS WORK

BETWEEN

MILEPOST 100.8 AND MILEPOST 109.3

IN THE

ALBANY DIVISION

OF THE

NEW YORK STATE THRUWAY

IN

ULSTER AND GREENE COUNTIES

TYPE	LIMITS
Safety Upgrades	8.5 miles plus Advance Signing

DEPOSIT REQUIRED **$250,000.00**

COMPLETION DATE: **November 17, 2017**

PRE-AWARD NOTICE

A Pre-Award Meeting has not been scheduled for this project. If a Pre-Award Meeting is deemed necessary, notice of the date and time will be provided.

To assist the Authority in its award process, the successful low bidder must furnish the following items upon request:

1. A current New York State Uniform Contracting Questionnaire (NYSUCQ) CCA-2 form must be on file;

2. A list of current contracts giving the firm or agency for which they are being performed, the name and phone number of someone therein familiar with the contractor's work, the contract amount, and percent of completion;

3. Pre-Award Project Schedule;

4. Documentation of the actions taken to comply with the Minority/Women's Business Enterprise Utilization goals (Non-Federal), or Disadvantaged Business Enterprise goals (Federal) as defined in the Proposal;

5. A "Schedule of Participation of Minority/Women's Business Enterprise" (Form TA-1022), or Disadvantaged Business Enterprise" (Form TA-1022F);

6. AAPHC-89 Approval to Subcontract.

Contract Documents will be supplied with the Authority's notice to the successful low bidder and must be executed and returned to the Authority within ten (10) days of receipt.

If a Pre-Award Meeting is held, it is requested that the Project Superintendent be present. The Contractor should be prepared to provide, upon request by the Authority, information regarding, among other things, the following:

1. Use of subcontractors, including who they will be and what items of work they will perform;

2. Suppliers and manufacturers;

3. Traffic control and safety;

4. Any anticipated problems that could affect the progression of the project.

CONTRACT AWARD

The award process cannot begin until the executed Contract Documents have been returned to the Authority and the successful Low Bidder has provided acceptable documentation with regard to his actions taken to comply with the M/WBE goals of this Contract or DBE Goals for Federally Aided Contracts.

ALL BIDDERS

PRE-BID INSPECTION

The prospective bidder must have in its possession the Contract Plans/Proposal and a Work Permit for identification purposes when conducting a pre-bid inspection of the Thruway/Canal facility.

The prospective bidder shall inform the appropriate Division Point of Contact (listed below) prior to visiting the site and shall strictly comply with all instructions and requirements.

- **New York State Thruway Authority Work Permit Application (TA-W41338)** is available at http://www.thruway.ny.gov/business/realproperty/index.html. The application shall be submitted to the appropriate Thruway Authority Division Permit Coordinator as indicated on page 2 of the application. The fee is waived for this Pre-Bid Inspection.

Division	Point of Contact	Phone
New York	Gail Winters	(845) 918-2510
Albany	Gary Raylinsky	(518) 436-2710
Syracuse	Jay Holbrook	(315) 438-2420
Buffalo	Paul Zakrzewski	(716) 635-6218

- **New York State Canal Corporation Canal Permit Application (TA-W99072)** is available at http://www.canals.ny.gov/business/realproperty/index.html#permits. The application shall be submitted to the appropriate Division Canal Permit Engineer as indicated on page 2 of the application. The fee is waived for this Pre-Bid Inspection.

Division	Point of Contact	Phone
Eastern - Albany Office	Garret O'Connor	(518) 471-5033
Western - Syracuse Office	Janet Deordio	(315) 438-2389
Western - Buffalo Office	Kevin Kerins	(716) 635-6252

Provisions of Section 107-05, Equipment Safety Procedures, contained in the Contract Proposal shall apply to all Pre-Bid Inspectors and shall be strictly adhered to while performing the pre-bid inspection.

PRECONSTRUCTION MEETING

A Pre-Construction Meeting will be held prior to the start of construction. The time, date and location will be coordinated by the Division Construction Engineer who will provide this information to the successful low bidder as soon as it is available.

WITHDRAWAL OF BID

A Contractor may at any time, upon at least fifteen (15) days written notice, withdraw its bid on a date sixty (60) days after bid opening or thirty (30) days after the properly executed contract documents have all been received by the Authority, whichever is later. The bid bond, bid deposit, and/or performance bond shall remain in effect until such period of written notice has expired provided the contract has not been approved by the Office of the State Comptroller in the interim.

The Contractor and the Authority may agree in writing to extend the date upon which the bid may be withdrawn if the contract has not been approved by the Office of the State Comptroller.

QUANTITY SHEET SUMMARY FOR PROPOSAL

CONTRACT ID: D214482 PROJECT(S): A72150

CONTRACTOR :_____

ITEM NUMBER	DESCRIPTION	UNIT	QUANTITY
201.06	CLEARING AND GRUBBING	LS	1.000
201.07	CLEARING AND GRUBBING	ACRE	3.400
203.02	UNCLASSIFIED EXCAVATION AND DISPOSAL	CY	1650.000
203.03	EMBANKMENT IN PLACE	CY	2200.000
203.07	SELECT GRANULAR FILL	CY	10.000
203.24000025	SHOULDER BACKUP MATERIAL	TON	705.000
206.0201	TRENCH AND CULVERT EXCAVATION	CY	14.000
207.20	GEOTEXTILE BEDDING	SY	3000.000
209.110202	CHECK DAM (DITCH BOTTOM WIDTH > 3' TO 6') GRAVEL BAG-TEMPORARY	EACH	10.000
209.13	SILT FENCE-TEMPORARY	LF	800.000
209.140201	SEDIMENT TRAP, SAND BAG - TEMPORARY	EACH	6.000
304.12	SUBBASE COURSE, TYPE 2	CY	1000.000
402.000013	PLANT PRODUCTION QUALITY ADJUSTMENT TO HMA ITEMS	QU	41.000
402.127203	12.5 F2 TOP COURSE HMA, 70 SERIES COMPACTION	TON	335.000
402.257903	25 F9 BINDER COURSE HMA, 70 SERIES COMPACTION	TON	480.000
407.0102	DILUTED TACK COAT	GAL	120.000
552.17	SHIELDS AND SHORING	SF	450.000
553.030001	TEMPORARY WATERWAY DIVERSION STRUCTURE	EACH	1.000
553.030002	TEMPORARY WATERWAY DIVERSION STRUCTURE	EACH	1.000
555.0105	CONCRETE FOR STRUCTURES, CLASS A	CY	4.000
559.1696 25	PROTECTIVE SEALING OF STRUCTURAL CONCRETE	SF	80.000
586.02 25	DRILLING AND GROUTING BOLTS OR REINFORCING BARS CONCRETE GROUT	EACH	15.000
603.0101	CULVERT-END SAFETY GRATE	SF	110.000
603.171116	GALVANIZED STEEL END SECTIONS-PIPE (2-2/3" X1/2" CORRUGATIONS) 15 INCHES DIAMETER, 16 GAUGE	EACH	2.000
603.171316	GALVANIZED STEEL END SECTION - PIPE (2-2/3 "X1/2" CORRUGATIONS) 21INCH DIAMETER, 16 GAUGE	EACH	1.000
603.171402	GALVANIZED STEEL END SECTIONS-PIPE (2-2/3" X 1/2" CORRUGATIONS) 24 INCH DIAMETER, 16 GAUGE	EACH	4.000
603.171614	GALVANIZED STEEL END SECTION - PIPE (2-2/3"X1/2" CORRUGATIONS) 30 INCHES DIAMETER, 14 GAUGE	EACH	1.000
603.77	CONCRETE COLLARS	EACH	4.000
603.8503 15	DRAINAGE PIPE, OPTIONAL 18 INCH DIA(FOR DRIVEWAY, GRAVEL AND DIRT SURF ROADWAYS ZONE 1 FILL HEIGHT 12 INCH OR MORE)	LF	80.000

QUANTITY SHEET SUMMARY FOR PROPOSAL

CONTRACT ID: D214482 PROJECT(S): A72150

CONTRACTOR :_____

ITEM NUMBER	DESCRIPTION	UNIT	QUANTITY
603.9812	SMOOTH INTERIOR CORRUGATED POLYETHYLENE CULVERT AND STORM DRAIN 12 INCHES DIAMETER	LF	24.000
603.9818	SMOOTH INTERIOR CORRUGATED POLYETHYLENE CULVERT AND STORM DRAIN 18 INCH DIAMETER	LF	5.000
603.9824	SMOOTH INTERIOR CORRUGATED POLYETHYLENE CULVERT STORM DRAIN 24" DIAMETER	LF	22.000
604.070801	ALTERING DRAINAGE STRUCTURE	EACH	8.000
606.10	BOX BEAM GUIDE RAILING	LF	1206.000
606.100002	BOX BEAM GUIDE RAILING (SHOP BENT OR SHOP MITERED)	LF	150.000
606.120101	BOX BEAM END PIECE	EACH	1.000
606.17	CORRUGATED BEAM MEDIAN BARRIER	LF	1600.000
606.18	MODIFIED G2 WEAK-POST, CORRUGATED BEAM GUIDE RAIL	LF	7912.500
606.19010025	THRIE BEAM RAILING CORRUGATED BEAM ROCK FENCE	LF	3425.000
606.22	ANCHORAGE UNITS FOR CORRUGATED BEAM GUIDE RAILING	EACH	6.000
606.26500408	SPECIAL TRANSITION	EACH	2.000
606.26500608	SPECIAL TRANSITION	EACH	4.000
606.26500708	SPECIAL TRANSITION	EACH	2.000
606.2701	HPBO (MOD.) CORRUGATED BEAM GUIDERAILING	LF	3000.000
606.2703	ANCHORAGE UNIT FOR HPBO (MOD.) CORRUGATED BEAM GUIDE RAILING	EACH	4.000
606.2801	HPBO (MOD.) CORRUGATED BEAM MEDIAN BARRIER	LF	275.000
606.3011	CONCRETE BARRIER TYPE A (PRECAST)	LF	20.000
606.3042	SINGLE-SLOPE CONCRETE MEDIAN BARRIER (PRECAST)	LF	240.000
606.3062	SINGLE-SLOPE CONCRETE HALF SECTION BARRIER (PRECAST)	LF	80.000
606.3403 25	END TERMINAL FOR 31 INCH HIGH HPBO (MOD) CORRUGATED BEAM GUIDE RAILING	EACH	2.000
606.46000025	CRASH CUSHION ATTENUATING TERMINAL 350 (CAT-350)	EACH	4.000
606.4809	I-BEAM POSTS FOR EXISTING BOX BEAM GUIDE RAILING	EACH	18.000
606.53	RESETTING BOX BEAM GUIDE RAILING	LF	36.000
606.59200125	RESETTING END TERMINALS FOR BOX BEAM GUIDE RAIL AND MEDIAN BARRIER	EACH	4.000
606.65	REMOVING AND STORING PRECAST CONCRETE BARRIER	LF	160.000
606.69100125	REMOVING AND STORING END TERMINAL FOR HEAVY POST BLOCKED OUT CORRUGATED GUIDE RAIL AND MEDIAN BARRIER	EACH	2.000
606.69200125	REMOVING AND STORING END TERMINAL FOR BOX BEAM GUIDE RAIL AND MEDIAN BARRIER	EACH	2.000

QUANTITY SHEET SUMMARY FOR PROPOSAL

CONTRACT ID: D214482 PROJECT(S): A72150

CONTRACTOR :_____

ITEM NUMBER	DESCRIPTION	UNIT	QUANTITY
606.71	REMOVING AND DISPOSING CORRUGATED BEAM GUIDE RAILING	LF	14269.000
606.72	REMOVING AND DISPOSING CORRUGATED BEAM MEDIAN BARRIER	LF	2606.000
606.73	REMOVING AND DISPOSING BOX BEAM GUIDE RAILING	LF	2891.000
606.75	REMOVING AND DISPOSING CONCRETE BARRIER	LF	960.000
606.7910	REMOVING AND DISPOSING ANCHORAGE UNITS FOR CORRUGATED BEAM GUIDE RAILING AND MEDIAN BARRIER	EACH	7.000
606.7920	REMOVING AND DISPOSING BOX BEAM GUIDE RAILING END ASSEMBLY	EACH	1.000
606.8101	GUIDE RAIL TRANSITION WEAK-POST CORRUGATED BEAM TO BOX BEAM GUIDE RAIL (ONE OR TWO-WAY OPERATION)	EACH	1.000
606.8103 25	REMOVE AND DISPOSE GUIDE RAIL TRANSITION CORRUGATED BEAM TO BOX BEAM (ONE OR TWO WAY OPERATION) INCLUDING TRANS ANCHORAG	EACH	3.000
606.8803	TRANSITION BETWEEN BOX BEAM GUIDE RAIL AND SINGLE SLOPE HALF SECTION CONCRETE BARRIER(ONE OR TWO WAY OPERATION)	EACH	10.000
606.8902	TRANSITION - HPBO (MOD) CORRUGATED BEAM GUIDE RAILING TO WEAK-POST CORRUGATED BEAM GUIDE RAILING	EACH	5.000
606.8903	TRANSITION - HPBO (MOD.) CORR BEAM GUIDERAILING TO SINGLE SLOPE CONCRETE HALF SECTION BARRIER	EACH	1.000
606.8905	TRANSITION - HPBO (MOD) CORRUGATED BEAM MEDIAN BARRIER TO WEAK POST CORRUGATED MEDIAN BARRIER	EACH	6.000
606.8906	TRANSITION - HPBO (MOD) CORRUGATED BEAM MEDIAN BARRIER TO SINGLE SLOPE CONCRETE MEDIAN BARRIER	EACH	2.000
606.9001	TRANSITIN BETWEEN STANDARD (NJ) CONCRETE BARRIER AND SINGLE-SLOPE CONCRETE BARRIER	EACH	1.000
606.92010125	REPLACE GUIDE RAIL SPLICE BOLTS	EACH	2368.000
607.19	RIGHT-OF-WAY FENCING	LF	2650.000
607.96 08	REMOVE AND DISPOSE OF EXISTING FENCE	LF	220.000
610.1402	TOPSOIL- ROADSIDE	CY	200.000
610.1601	TURF ESTABLISHMENT- ROADSIDE	SY	2000.000
614.060603	TREE REMOVAL OVER 36 INCHES TO 48 INCHES DIAMETER BREAST HEIGHT - STUMPS CUT TO BELOW GRADE	EACH	1.000
617.11 24	EQUIPMENT CLEANING FOR INVASIVE PLANT SPECIES	LS	1.000
619.01	BASIC WORK ZONE TRAFFIC CONTROL	LS	1.000
619.110512	PORTABLE, VARIABLE MESSAGE SIGN (PVMS) STANDARD SIZE - FULL MATRIX (LED) NO OPTIONAL EQUIPMENT SPEC, CELLULAR COLUMN	EACH	4.000
619.24	NIGHTTIME OPERATIONS	LS	1.000
619.96 25	SPEED DISPLAY TRAILER	EACH	2.000
620.03	STONE FILLING (LIGHT)	CY	25.000

QUANTITY SHEET SUMMARY FOR PROPOSAL

CONTRACT ID: D214482 PROJECT(S): A72150

CONTRACTOR :_____

ITEM NUMBER	DESCRIPTION	UNIT	QUANTITY
621.01	CLEANING CULVERTS WITH A SPAN OF 50 INCH OR LESS	LF	160.000
621.05	CLEAN, GRADE AND SHAPE EXISTING ROADSIDE SECTION	LF	1860.000
625.120001	MAPPING, GRADE GPS INSPECTION UNIT	EACH	1.000
627.5014 08	CUTTING PAVEMENT	LF	1000.000
637.11 25	ENGINEER'S FIELD OFFICE - TYPE 1	MNTH	10.000
640.2401 25	WHITE REFLECTORIZED PAVEMENT MARKING PAINTS, 6" X 15 MIL	LF	41000.000
640.2403 25	WHITE REFLECTORIZED PAVEMENT LETTERS	EACH	27.000
640.2404 25	WHITE REFLECTORIZED PAVEMENT SYMBOLS	EACH	7.000
645.5201	GROUND-MOUNTED SIGN PANELS WITHOUT Z-BARS HIGH- VISIBILITY SHEETING	SF	18.000
646.0603 25	INSTALL DELINEATOR OR TENTH MILE MARKER 0N POST	EACH	5.000
646.0610 25	INSTALL DELINEATOR OR TENTH MILE MARKER BAND OR BRACKET MOUNTED	EACH	3.000
646.0626 25	INSTALL MILE MARKERS	EACH	2.000
646.1032 25	RESET EXISTING DELINEATORS, AND MARKERS,	EACH	6.000
646.50 25	REMOVE AND DISPOSE OF DELINEATORS AND MARKERS	EACH	10.000
647.31	RELOCATE SIGN PANEL, SIGN PANEL ASSEMBLY SIZE I, (UNDER 30 SQUARE FEET)	EACH	2.000
654.05	NEW CONCRETE FOUNDATION	CY	2.000
654.5110 25	REUSABLE IMPACT ATTENUATOR, TL 2, LESS THAN OR EQUAL TO 2 FEET OBSTRUCTION WIDTH	EACH	1.000
655.1003	WELDED FRAME AND RECTANGULAR GRATE 3	EACH	1.000
670.8888 25	RELOCATING EXISTING FIBER OPTIC LINE	LF	250.000
685.0106 25	WHITE EPOXY REFLECTORIZED PAVEMENT STRIPES 6 INCH X 15 MILS	LF	500.000
685.0206 25	YELLOW EPOXY REFLECTORIZED PAVEMENT STRIPES, 6 INCH X 15 MIL	LF	3000.000
687.0198 25	WHITE PREFORMED THERMOPLASTIC FOR CROSS WALK STRIPES, 12"	LF	90.000
688.0401 25	PREFORMED REFLECTORIZED HANDICAP PARKING PAVEMENT SYMBOLS	EACH	23.000
697.0203 25	FIELD CHANGE ORDER (THRUWAY)	DC	100000.000
698.06	STEEL/IRON PRICE ADJUSTMENT	DC	1000.000
699.04 25	MOBILIZATION	LS	1.000

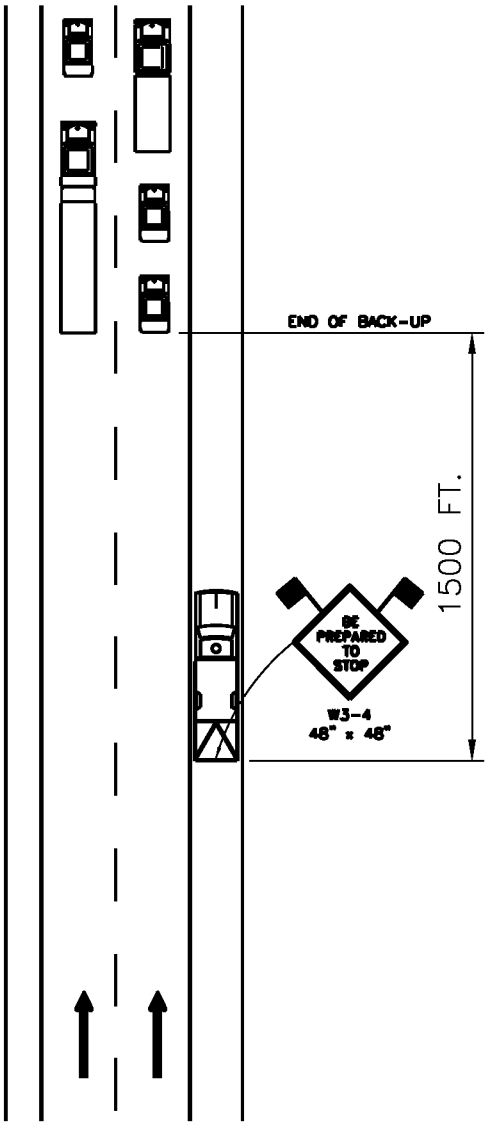

TWO-LANE SECTION

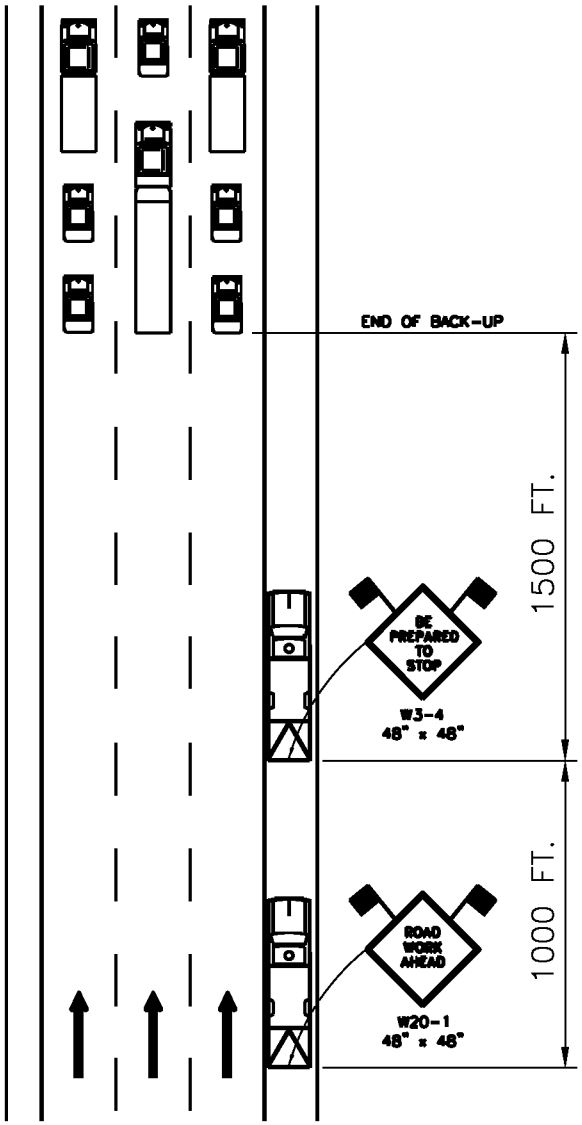

THREE-LANE SECTION

NOTE:

THE "BE PREPARED TO STOP" SIGN (W3-4) SHALL BE USED, WHERE CONDITIONS PERMIT, TO INFORM ONCOMING TRAFFIC OF A STOPPED OR VERY SLOW TRAFFIC CONDITION CAUSED BY STATIONARY CONSTRUCTION WORK ZONES. THE SIGN SHALL BE POSTED APPROXIMATELY 1500 FEET UPSTREAM OF THE END OF THE BACK-UP. WHEN THE END OF THE BACK-UP MOVES, THE SIGN SHALL ALSO BE MOVED TO MAINTAIN THAT SPACING.

IN SECTIONS WITH THREE OR MORE LANES, IF THE RESULTING LOCATION PLACES THE SIGN UPSTREAM OF THE FIRST WARNING SIGN FOR THE PROJECT, A "ROAD WORK AHEAD" SIGN (W20-1) SHALL BE PLACED APPROXIMATELY 1000 FEET IN ADVANCE OF THE "BE PREPARED TO STOP" SIGN.

A BACK-UP SHALL BE DEFINED AS A LINE OF STOPPED OR SLOWLY MOVING VEHICLES (25 MPH OR LESS) EXTENDING FROM THE BEGINNING OF THE TAPER TO THE FIRST WARNING SIGN OF THE WORK ZONE AND INVOLVING A DELAY OF AT LEAST 10 MINUTES.

THE "BE PREPARED TO STOP" SIGN IS NOT REQUIRED WHEN TRAFFIC BACK-UPS ARE CREATED UNDER NORMAL OPERATING CONDITIONS OUTSIDE THE LIMITS OF A WORK ZONE.

LEGEND

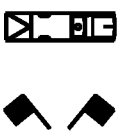

WORK VEHICLE (ATTENUATOR OPTIONAL)

WARNING FLAGS MINIMUM 18 x 18 IN.

NEW YORK STATE THRUWAY AUTHORITY
DEPARTMENT OF ENGINEERING SERVICES

TITLE:
"BE PREPARED TO STOP" SIGNING FOR STATIONARY WORK ZONES

DRWN BY: CAD	DATE:	SCALE:	DWG. NO.
CHKD BY: TA	04/2013	N.T.S.	BPS

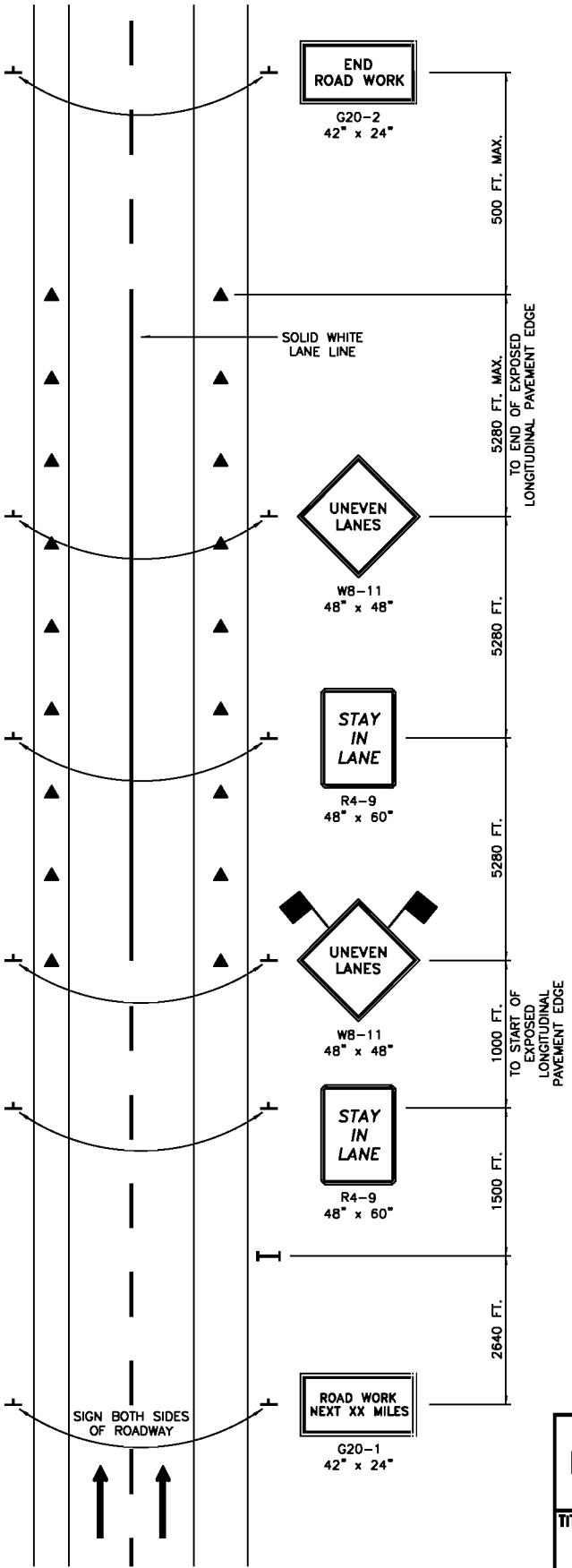

GENERAL:

THIS PLAN SHALL BE USED IN AREAS WHERE THERE IS AN EXPOSED LONGITUDINAL PAVEMENT EDGE CONDITION BETWEEN LANES WITH A DIFFERENCE IN ELEVATION OF 1/2 INCH TO 1 INCH.

NOTES:

1. THIS PLAN APPLIES TO TWO-, THREE-, FOUR-, AND FIVE-LANE SECTIONS.
2. THE PLAN SHOWN IS FOR AREAS WHERE THE USABLE LEFT SHOULDER/MEDIAN WIDTH IS AT LEAST 6 FEET. IN AREAS WHERE THE USABLE LEFT SHOULDER/MEDIAN WIDTH IS LESS THAN 6 FEET, LEFT SIDE SIGNS SHALL BE MOUNTED ON THE MEDIAN BARRIER. IF THE TOTAL MEDIAN WIDTH IS LESS THAN 6 FEET, LEFT SIDE SIGNS SHALL NOT BE REQUIRED.
3. THE "ROAD WORK NEXT XX MILES" (G20-1), "UNEVEN LANES" (W8-11), AND "END ROAD WORK" (G20-2) SIGNS SHALL BE BLACK ON FLUORESCENT ORANGE. THE REFLECTIVE BACKGROUND FOR THE "STAY IN LANE" (W4-9) SIGNS SHALL BE CLASS "B" OR "C" REFLECTIVE SHEETING.
4. THE PORTABLE VARIABLE MESSAGE SIGN (PVMS) SHALL SHALL DISPLAY THE TWO-PART MESSAGE: "UNEVEN LANES AHEAD / MCYCLES USE CAUTION."
5. "UNEVEN LANES" (W8-11) SIGNS SHALL BE ALTERNATAED WITH "STAY IN LANE" SIGNS FOR THE ENTIRE LENGTH OF THE EXPOSED LONGITUDINAL PAVEMENT EDGE CONDITION AT A SPACING NOT TO EXCEED 1 MILE. ADDITIONAL "UNEVEN LANES" (W8-11) SIGN(S) SHALL BE REQUIRED JUST BEYOND ANY ENTRANCE RAMP THAT TERMINATES WITHIN THE WORK ZONE SIGNING.
6. WHEN THE EXPOSED LONGITUDINAL PAVEMENT EDGE CONDITION NO LONGER EXISTS, THE "UNEVEN LANES" (W8-11) SIGNS AND "STAY IN LANE" (R4-9) SIGNS SHALL BE REMOVED OR COVERED AND THE PVMS SHALL BE DE-ACTIVATED OR PROGRAMMED TO DISPLAY ANOTHER APPROVED MESSAGE.

PAVEMENT MARKING NOTES:

1. LANE LINE PAVEMENT MARKINGS (BROKEN LINES) SHALL BE REPLACED WITH SOLID WHITE LINES FOR THE ENTIRE LENGTH OF THE EXPOSED LONGITUDINAL PAVEMENT EDGE CONDITION.
2. WHEN EDGE LINE PAVEMENT MARKINGS (SOLID LINES) ARE REMOVED AND NOT REPLACED AT THE END OF THE WORK SHIFT, TRAFFIC CONES, OR OTHER APPROVED CHANNELIZING DEVICE, SHALL BE USED TO DELINEATE THE PAVEMENT EDGE.

LEGEND

TEMPORARY SIGN

WARNING FLAGS
MINIMUM 18 x 18 IN.

PORTABLE VARIABLE MESSAGE SIGN (PVMS)

TRAFFIC CONES @ 120 FT. SPACING

NEW YORK STATE THRUWAY AUTHORITY
DEPARTMENT OF ENGINEERING SERVICES

TITLE:
"UNEVEN LANES"
SIGNING

DRWN BY: CAD CHKD BY: TA	DATE: 04/2013	SCALE: N.T.S.	DWG. NO. UL

WORK TO BE DONE

The following is a general description of the work to be done under this Contract. This list is intended to give the Contractor a general description of the work involved in this Contract and is not a complete listing of all work to be done. All work shall be done in accordance with the Contract Documents even though not specifically mentioned in this list.

1. Perform work zone traffic control as indicated in the contract documents and as ordered by the engineer.
2. Install new guide rail and/or modify existing guide rails at locations shown on plans.
3. Extend and/or replace existing culvert pipes and end sections along with slope flattening at locations shown.
4. Perform drainage improvements-clean culverts, re-grade flattened embankment slopes. Clean and regrade existing ditches and establish turf where indicated.
5. Place and compact shoulder back-up at various locations A.O.B.E..
6. Install pavement striping at the following areas:
   - Interchange 18 Park and Ride at MP 76.01
   - Malden Service Area at MP 103.5 NB
   - New Baltimore Service Area at MP 127.1 SB
7. After the completion of work, all access to the work sites shall be restored to its original condition and approved by the engineer. Cost to be included under various items.

SCHEDULE AND SUSPENSION OF WORK

The New York State Thruway is a limited access, high-speed, high-volume highway. Traffic shall be maintained in accordance with the *Manual on Uniform Traffic Control Devices (MUTCD),* the *Work Zone Traffic Control Plans*, the *Standard Specifications* Section 619 and the following provisions:

A. WORK ZONE TRAFFIC CONTROL

1. Lane closures on the Thruway shall only be allowed in accordance with the traffic management table(s) included in this proposal, unless indicated otherwise in the contract documents. If more than one table is applicable to a work zone location, the most restrictive requirements shall be used. Traffic management tables do not guarantee lane closure availability; the requirements of Section B. *Work Restrictions* shall supersede these tables, when applicable.

2. Lane closures on the Thruway will be permitted for work site access, delivery of materials and equipment, and work operations. Personal vehicles will **NOT** be allowed to park along the Thruway or within lane closures on the Thruway at any time. During non-working hours, all equipment and materials shall be stored at least 30 feet from the edge of pavement (both mainline and ramps) or be protected by a physical barrier approved by the Engineer.

3. Lane closures will **NOT** be permitted during holiday periods or when unforeseen circumstances arise, as described in Section B. *Work Restrictions,* unless indicated otherwise in the contract documents.

4. Lane closures will **NOT** be permitted for the sole convenience of the Contractor. Lane closures will be permitted in order to protect traffic from an actual hazard, as determined by the Engineer.

5. Permanent lane closures will **NOT** be permitted for the duration of the contract.

6. Simultaneous closure of right and left shoulders will **NOT** be permitted unless indicated otherwise in the contract documents. Either right or left shoulder must remain clear and available through all work zones. The open shoulder shall not be used for the storage of vehicles, equipment, supplies or any other obstructions, or for any work activity.

7. Ramp closures will **NOT** be permitted, unless indicated otherwise in the contract documents. Access to interchanges, service areas and parking areas shall be maintained at all times.

8. Traffic will **NOT** be permitted to drive on milled pavement, unless indicated otherwise in the contract documents.

B. WORK RESTRICTIONS

1. **HOLIDAY PERIODS.** Lane closures will **NOT** be permitted during holiday periods, unless indicated otherwise in the contract documents. The Authority may permit work on Thruway facilities only if operations do not inhibit or distract traffic. Access to work sites from state and local roads will be permitted provided the municipality having jurisdiction for the road gives written permission. Holiday periods for this project shall be as follows:

SCHEDULE AND SUSPENSION OF WORK

2017						
HOLIDAY	FROM			TO		
	TIME	DAY	DATE	TIME	DAY	DATE
Dr. Martin Luther King, Jr. Day	Noon	Friday	01/13/2017	Noon	Tuesday	01/17/2017
Presidents' Day	Noon	Friday	02/17/2017	Noon	Tuesday	02/21/2017
Easter	Noon	Thursday	04/13/2017	Noon	Monday	04/17/2017
Victoria Day (Canada)	Noon	Friday	05/19/2017	Noon	Tuesday	05/23/2017
Memorial Day	Noon	Thursday	05/25/2017	Noon	Tuesday	05/30/2017
Canada Day/Independence Day	Noon	Friday	06/30/2017	Noon	Wednesday	07/05/2017
Labor Day	Noon	Thursday	08/31/2017	Noon	Tuesday	09/05/2017
Columbus Day/ Thanksgiving (Canada)	Noon	Friday	10/06/2017	Noon	Tuesday	10/10/2017
Veterans Day	Noon	Thursday	11/09/2017	Noon	Monday	11/13/2017
Thanksgiving	Noon	Wednesday	11/22/2017	Noon	Monday	11/27/2017
Christmas/New Year's Day	Noon	Friday	12/22/2017	Noon	Tuesday	01/02/2018

2. Proposed lane closure schedules shall be submitted to the Engineer for review and approval at least one week in advance of the earliest closure.

3. The Contractor shall **NOT** be allowed to establish any lane closures during periods of inclement weather, wet or icy pavement, reduced visibility, traffic accident, emergency, or if the lane closure is causing excessive delay to the public. The Authority reserves the right to alter any lane closure and/or direct the Contractor to immediately remove a lane closure during such circumstances. The Authority shall be the sole judge of when conditions warrant these lane closure restrictions, and such restrictions will not entitle the Contractor to file a claim for additional compensation.

4. **ALBANY DIVISION:** Northbound lane closures between Exit 19 and Exit 24 will **NOT** be permitted between 7:00 a.m. and 6:00 p.m. from Friday, July 21, 2017 to Monday, September 4, 2017 during the Saratoga Racetrack season.

5. **WINTER SHUTDOWN.** A winter shutdown shall be in effect from 3:00 p.m. **November 15** to 6:00 a.m. **April 1**. During this period, the Contractor shall **NOT** be permitted to have lane closures. All temporary tape lines shall be removed, temporary concrete barrier shall be set in its winter shutdown location, and all traffic shall be re-established to its pre-construction configuration on permanent alignment. Mobilization for the following construction season may begin prior to **April 1** with permission from the Authority.

6. The Contractor shall submit a Plan of Operations to the Engineer prior to working on any full-depth repair area shown in the contract documents. The Plan of Operations shall list all full-depth repair areas and the estimated duration to complete each location. The Contractor shall also identify any full-depth repair area that may not be completed within the timeframes allowed by the traffic management table(s). For such location(s), the Contractor may request a waiver of restrictions to complete the repair(s). The Authority will review the request and determine whether or not a waiver will be granted. The Authority has the right to divide repair areas into smaller sections in lieu of granting a waiver.

SCHEDULE AND SUSPENSION OF WORK

7. The Contractor shall have 45 calendar days to replace the Shoulder Treatment for Accident Reduction (STAR) groove pattern where more than 1,500 contiguous feet have been removed by other contract work. The Contractor shall also ensure that STARs are installed prior to the official shutdown period, regardless of the 45 calendar day requirement or the length removed. Exceptions to this requirement are shoulders protected by temporary traffic control devices installed as part of a work zone traffic control plan developed in the contract documents or areas directly adjacent to detour pavement that will be used in subsequent phase(s) of the project.

   The Contractor shall consider these requirements when preparing bids and scheduling/sequencing the work for this contract. Failure to comply with the time frames specified will be considered a substantial deficiency in work zone traffic control and result in the non-payment for the Basic Work Zone Traffic Control Item for each calendar day during which STARs remain incomplete. Liquidated Damages will also be assessed at rates shown in Table 108-1 of the NYSDOT Standard Specifications.

8. Work restrictions <u>may</u> be modified if:

   a. The Contractor has received permission through the Engineer, from the Division Director or designee, to progress construction operations contained entirely behind temporary concrete barrier. There shall be no hauling of materials in or out of the work site during restricted periods, and open lane availability requirements shall not be violated or compromised.

   b. The Contractor has received permission through the Engineer, from the Division Director or designee, for temporary modification of the lane availability restrictions for performance of specific construction operations for a specific time period.

      NOTE: Such requests must be based on current traffic volumes which would permit the requested temporary modification with little probability of causing disruption or delay to the public.

      The Contractor shall include full explanation of the benefits to the Public and to the Authority, which would accrue in granting a temporary waiver for performance of the specific operations including calculations for any credit that may be offered. A contingency plan for action to be taken, should an unexpected traffic backup occur, shall accompany this presentation and will be one prime consideration in evaluating the request.

   c. The Contractor has received written authorization from the Division Director or designee to perform specific construction operations, violating the lane availability restrictions or other work restrictions during a specifically prohibited time period.

      NOTE: The Contractor shall submit a written request to the Authority's Division Director, with copy to the Engineer, for permission to perform specific construction operations at specific locations and times, including a detailed explanation of why the work cannot be performed in conformance with the contract. Such requests must be received at the Division Office at least one full week before the date of the requested variance, and at least two full weeks should granting the waiver require making notice to the public regarding potential disruptions and delays.

   If written authorization to work is granted by the Authority, the Contractor shall be strictly limited to those operations approved in the authorization. In making application for a waiver, the Contractor agrees that any waiver of restrictions granted by the Authority is exclusively for the Authority's benefit and purposes, and as such is subject to revocation without requirement for advance notice. Also, the disapproval of requests for waiver of contract requirements is not subject to administrative review or appeal under the contract.

SCHEDULE AND SUSPENSION OF WORK

C. GENERAL CONDITIONS

The Contract is to be completed on or before the specified completion date. If, for any reason, the Contractor fails to fulfill this obligation and requests an extension of time and the request is granted, the Authority, as a condition for extending the time of completion, shall retain the right to limit the Contractor's hours and/or days of work and/or impose conditions under which the work shall be performed in order that the traffic may not be unduly inconvenienced.

All the required liability and property damage insurance with the limits stated in this Proposal shall be effective and shall be continued in force throughout the life of this Contract including the stated periods of the suspension of the work.

The Contractor shall consider the foregoing requirement when preparing its "Schedule of Operations".

Exit 19 to 20 N

1150 Vphpl

LANES REQUIRED TO BE OPEN BY HOUR AND TIME OF DAY

SPRING SEASON March 1 through May 20

HR/DAY	MON	TUES	WEDS	THUR	FRI	SAT	SUN
0	1	1	1	1	1	1	1
1	1	1	1	1	1	1	1
2	1	1	1	1	1	1	1
3	1	1	1	1	1	1	1
4	1	1	1	1	1	1	1
5	1	1	1	1	1	1	1
6	1	1	1	1	1	1	1
7	1	1	1	1	1	1	1
8	1	1	1	1	2	2	1
9	1	1	1	1	2	2	1
10	2	1	1	1	2	2	2
11	2	1	1	2	2	2	2
12	2	1	1	2	2	2	2
13	2	1	2	2	2	2	2
14	2	2	2	2	2	2	2
15	2	2	2	2	2	2	2
16	2	2	2	2	2	2	2
17	2	2	2	2	2	2	2
18	1	1	1	2	2	1	2
19	1	1	1	1	2	1	2
20	1	1	1	1	2	1	2
21	1	1	1	1	2	1	1
22	1	1	1	1	1	1	1
23	1	1	1	1	1	1	1

LANES REQUIRED TO BE OPEN BY HOUR AND TIME OF DAY

SUMMER SEASON May 21 through September 15

HR/DAY	MON	TUES	WEDS	THUR	FRI	SAT	SUN
0	1	1	1	1	1	1	1
1	1	1	1	1	1	1	1
2	1	1	1	1	1	1	1
3	1	1	1	1	1	1	1
4	1	1	1	1	1	1	1
5	1	1	1	1	1	1	1
6	1	1	1	1	1	1	1
7	2	1	1	2	2	2	1
8	2	1	2	2	2	2	1
9	2	1	2	2	2	2	2
10	2	2	2	2	2	2	2
11	2	2	2	2	2	2	2
12	2	2	2	2	2	2	2
13	2	2	2	2	2	2	2
14	2	2	2	2	2	2	2
15	2	2	2	2	2	2	2
16	2	2	2	2	2	2	2
17	2	2	2	2	2	2	2
18	1	1	2	2	2	2	2
19	1	1	1	2	2	2	2
20	1	1	1	2	2	1	2
21	1	1	1	2	2	1	1
22	1	1	1	1	2	1	1
23	1	1	1	1	1	1	1

LANES REQUIRED TO BE OPEN BY HOUR AND TIME OF DAY

FALL SEASON September 16 through November 30

HR/DAY	MON	TUES	WEDS	THUR	FRI	SAT	SUN
0	1	1	1	1	1	1	1
1	1	1	1	1	1	1	1
2	1	1	1	1	1	1	1
3	1	1	1	1	1	1	1
4	1	1	1	1	1	1	1
5	1	1	1	1	1	1	1
6	1	1	1	1	1	1	1
7	1	1	1	1	1	1	1
8	1	1	1	1	1	2	1
9	1	1	1	2	2	2	1
10	2	1	1	2	2	2	2
11	2	1	2	2	2	2	2
12	2	2	2	2	2	2	2
13	2	2	2	2	2	2	2
14	2	2	2	2	2	2	2
15	2	2	2	2	2	2	2
16	2	2	2	2	2	2	2
17	2	2	2	2	2	2	2
18	1	1	2	1	2	2	2
19	1	1	1	1	2	1	2
20	1	1	1	1	2	1	2
21	1	1	1	1	2	1	1
22	1	1	1	1	2	1	1
23	1	1	1	1	1	1	1

LANES REQUIRED TO BE OPEN BY HOUR AND TIME OF DAY

WINTER SEASON December 1 through February 28

HR/DAY	MON	TUES	WEDS	THUR	FRI	SAT	SUN
0	1	1	1	1	1	1	1
1	1	1	1	1	1	1	1
2	1	1	1	1	1	1	1
3	1	1	1	1	1	1	1
4	1	1	1	1	1	1	1
5	1	1	1	1	1	1	1
6	1	1	1	1	1	1	1
7	1	1	1	1	1	1	1
8	1	1	1	1	2	2	1
9	1	1	1	1	2	2	1
10	2	1	2	1	2	2	2
11	2	2	2	2	2	2	2
12	2	2	2	2	2	2	2
13	2	2	2	2	2	2	2
14	2	2	2	2	2	2	2
15	2	2	2	2	2	2	2
16	2	2	2	2	2	2	2
17	2	2	2	2	2	2	2
18	1	1	1	2	2	1	2
19	1	1	1	1	2	1	1
20	1	1	1	1	2	1	1
21	1	1	1	1	2	1	1
22	1	1	1	1	2	1	1
23	1	1	1	1	1	1	1

Exit 19 to 20 S

1150 Vphpl

LANES REQUIRED TO BE OPEN BY HOUR AND TIME OF DAY
SPRING SEASON March 1 through May 20

HR/DAY	MON	TUES	WEDS	THUR	FRI	SAT	SUN
0	1	1	1	1	1	1	1
1	1	1	1	1	1	1	1
2	1	1	1	1	1	1	1
3	1	1	1	1	1	1	1
4	1	1	1	1	1	1	1
5	1	1	1	1	1	1	1
6	1	1	1	1	1	1	1
7	1	1	1	2	1	1	1
8	2	2	2	1	2	1	1
9	2	1	2	2	2	2	1
10	2	1	1	2	2	2	2
11	2	1	1	2	2	2	2
12	2	1	1	2	2	2	2
13	2	1	1	2	2	2	2
14	2	1	1	2	2	2	2
15	2	2	2	2	2	2	2
16	2	2	2	2	2	2	2
17	2	2	2	2	2	2	2
18	1	1	1	2	2	1	2
19	1	1	1	1	2	1	2
20	1	1	1	1	1	1	2
21	1	1	1	1	1	1	1
22	1	1	1	1	1	1	1
23	1	1	1	1	1	1	1

LANES REQUIRED TO BE OPEN BY HOUR AND TIME OF DAY
SUMMER SEASON May 21 through September 15

HR/DAY	MON	TUES	WEDS	THUR	FRI	SAT	SUN
0	1	1	1	1	1	1	1
1	1	1	1	1	1	1	1
2	1	1	1	1	1	1	1
3	1	1	1	1	1	1	1
4	1	1	1	1	1	1	1
5	1	1	1	1	1	1	1
6	1	1	1	1	1	1	1
7	2	1	1	1	2	1	1
8	2	2	2	2	2	2	1
9	2	2	2	2	2	2	2
10	2	2	2	2	2	2	2
11	2	2	2	2	2	2	2
12	2	2	2	2	2	2	2
13	2	2	2	2	2	2	2
14	2	2	2	2	2	2	2
15	2	2	2	2	2	2	2
16	2	2	2	2	2	2	2
17	2	2	2	2	2	2	2
18	2	2	2	2	2	2	2
19	2	1	1	1	2	2	2
20	2	1	1	1	1	1	2
21	1	1	1	1	1	1	2
22	1	1	1	1	1	1	1
23	1	1	1	1	1	1	1

LANES REQUIRED TO BE OPEN BY HOUR AND TIME OF DAY
FALL SEASON September 16 through November 30

HR/DAY	MON	TUES	WEDS	THUR	FRI	SAT	SUN
0	1	1	1	1	1	1	1
1	1	1	1	1	1	1	1
2	1	1	1	1	1	1	1
3	1	1	1	1	1	1	1
4	1	1	1	1	1	1	1
5	1	1	1	1	1	1	1
6	1	1	1	1	1	1	1
7	1	1	1	2	1	1	1
8	2	2	1	1	2	1	1
9	2	1	1	2	2	2	2
10	2	2	2	2	2	2	2
11	2	2	2	2	2	2	2
12	2	2	2	2	2	2	2
13	2	2	2	2	2	2	2
14	2	2	2	2	2	2	2
15	2	2	2	2	2	2	2
16	2	2	2	2	2	2	2
17	2	2	2	2	2	2	2
18	2	2	1	1	2	2	2
19	1	1	1	1	2	1	2
20	1	1	1	1	1	1	2
21	1	1	1	1	1	1	1
22	1	1	1	1	1	1	1
23	1	1	1	1	1	1	1

LANES REQUIRED TO BE OPEN BY HOUR AND TIME OF DAY
WINTER SEASON December 1 through February 28

HR/DAY	MON	TUES	WEDS	THUR	FRI	SAT	SUN
0	1	1	1	1	1	1	1
1	1	1	1	1	1	1	1
2	1	1	1	1	1	1	1
3	1	1	1	1	1	1	1
4	1	1	1	1	1	1	1
5	1	1	1	1	1	1	1
6	1	1	1	1	1	1	1
7	1	2	1	1	1	1	1
8	2	2	2	2	1	1	1
9	2	1	2	1	2	2	1
10	2	2	2	1	2	2	2
11	2	2	2	2	2	2	2
12	2	2	2	2	2	2	2
13	2	2	2	2	2	2	2
14	2	2	2	2	2	2	2
15	2	2	2	2	2	2	2
16	2	2	2	2	2	2	2
17	2	2	2	2	2	2	2
18	2	1	1	1	2	1	2
19	1	1	1	1	1	1	2
20	1	1	1	1	1	1	1
21	1	1	1	1	1	1	1
22	1	1	1	1	1	1	1
23	1	1	1	1	1	1	1

Exit 20 to 21 N

1150 Vphpl

LANES REQUIRED TO BE OPEN BY HOUR AND TIME OF DAY

SPRING SEASON March 1 through May 20

HR/DAY	MON	TUES	WEDS	THUR	FRI	SAT	SUN
0	1	1	1	1	1	1	1
1	1	1	1	1	1	1	1
2	1	1	1	1	1	1	1
3	1	1	1	1	1	1	1
4	1	1	1	1	1	1	1
5	1	1	1	1	1	1	1
6	1	1	1	1	1	1	1
7	1	1	1	1	1	1	1
8	1	1	1	1	1	1	1
9	1	1	1	1	1	2	1
10	1	1	1	1	2	2	1
11	2	1	1	1	2	2	2
12	2	1	1	2	2	2	2
13	2	1	1	2	2	2	2
14	2	1	1	2	2	2	2
15	2	1	2	2	2	2	2
16	2	2	2	2	2	2	2
17	2	1	1	2	2	1	2
18	1	1	1	1	2	1	2
19	1	1	1	1	2	1	2
20	1	1	1	1	2	1	2
21	1	1	1	1	2	1	1
22	1	1	1	1	1	1	1
23	1	1	1	1	1	1	1

LANES REQUIRED TO BE OPEN BY HOUR AND TIME OF DAY

SUMMER SEASON May 21 through September 15

HR/DAY	MON	TUES	WEDS	THUR	FRI	SAT	SUN
0	1	1	1	1	1	1	1
1	1	1	1	1	1	1	1
2	1	1	1	1	1	1	1
3	1	1	1	1	1	1	1
4	1	1	1	1	1	1	1
5	1	1	1	1	1	1	1
6	1	1	1	1	1	1	1
7	2	1	1	1	1	1	1
8	2	1	1	2	2	2	1
9	2	1	1	2	2	2	2
10	2	1	2	2	2	2	2
11	2	2	2	2	2	2	2
12	2	2	2	2	2	2	2
13	2	2	2	2	2	2	2
14	2	2	2	2	2	2	2
15	2	2	2	2	2	2	2
16	2	2	2	2	2	2	2
17	2	2	2	2	2	2	2
18	1	1	2	2	2	2	2
19	1	1	1	2	2	1	2
20	1	1	1	2	2	1	2
21	1	1	1	1	2	1	1
22	1	1	1	1	2	1	1
23	1	1	1	1	1	1	1

LANES REQUIRED TO BE OPEN BY HOUR AND TIME OF DAY

FALL SEASON September 16 through November 30

HR/DAY	MON	TUES	WEDS	THUR	FRI	SAT	SUN
0	1	1	1	1	1	1	1
1	1	1	1	1	1	1	1
2	1	1	1	1	1	1	1
3	1	1	1	1	1	1	1
4	1	1	1	1	1	1	1
5	1	1	1	1	1	1	1
6	1	1	1	1	1	1	1
7	1	1	1	1	1	1	1
8	1	1	1	1	1	1	1
9	1	1	1	2	2	2	1
10	1	1	1	2	2	2	2
11	2	1	1	2	2	2	2
12	2	2	2	2	2	2	2
13	2	2	2	2	2	2	2
14	2	2	2	2	2	2	2
15	2	2	2	2	2	2	2
16	2	2	2	2	2	2	2
17	2	2	2	2	2	2	2
18	1	1	1	1	2	1	2
19	1	1	1	1	2	1	2
20	1	1	1	1	2	1	2
21	1	1	1	1	2	1	1
22	1	1	1	1	1	1	1
23	1	1	1	1	1	1	1

LANES REQUIRED TO BE OPEN BY HOUR AND TIME OF DAY

WINTER SEASON December 1 through February 28

HR/DAY	MON	TUES	WEDS	THUR	FRI	SAT	SUN
0	1	1	1	1	1	1	1
1	1	1	1	1	1	1	1
2	1	1	1	1	1	1	1
3	1	1	1	1	1	1	1
4	1	1	1	1	1	1	1
5	1	1	1	1	1	1	1
6	1	1	1	1	1	1	1
7	1	1	1	1	1	1	1
8	1	1	1	1	1	1	1
9	1	1	1	1	1	2	1
10	1	1	1	1	2	2	1
11	2	1	2	2	2	2	2
12	2	2	2	2	2	2	2
13	2	2	2	2	2	2	2
14	2	2	2	2	2	2	2
15	2	2	2	2	2	2	2
16	2	2	2	2	2	2	2
17	2	1	2	2	2	1	2
18	1	1	1	1	2	1	2
19	1	1	1	1	2	1	1
20	1	1	1	1	2	1	1
21	1	1	1	1	2	1	1
22	1	1	1	1	2	1	1
23	1	1	1	1	1	1	1

Exit 20 to 21 S

1150 Vphpl

LANES REQUIRED TO BE OPEN BY HOUR AND TIME OF DAY

SPRING SEASON March 1 through May 20

HR/DAY	MON	TUES	WEDS	THUR	FRI	SAT	SUN
0	1	1	1	1	1	1	1
1	1	1	1	1	1	1	1
2	1	1	1	1	1	1	1
3	1	1	1	1	1	1	1
4	1	1	1	1	1	1	1
5	1	1	1	1	1	1	1
6	1	1	1	1	1	1	1
7	1	1	1	1	1	1	1
8	1	1	1	1	1	1	1
9	1	1	1	1	2	2	1
10	1	1	1	1	2	2	2
11	1	1	1	1	2	2	2
12	2	1	1	1	2	2	2
13	1	1	1	1	2	2	2
14	1	1	1	2	2	2	2
15	1	1	1	2	2	2	2
16	2	2	2	2	2	2	2
17	1	1	1	2	2	2	2
18	1	1	1	1	2	1	2
19	1	1	1	1	1	1	2
20	1	1	1	1	1	1	1
21	1	1	1	1	1	1	1
22	1	1	1	1	1	1	1
23	1	1	1	1	1	1	1

LANES REQUIRED TO BE OPEN BY HOUR AND TIME OF DAY

SUMMER SEASON May 21 through September 15

HR/DAY	MON	TUES	WEDS	THUR	FRI	SAT	SUN
0	1	1	1	1	1	1	1
1	1	1	1	1	1	1	1
2	1	1	1	1	1	1	1
3	1	1	1	1	1	1	1
4	1	1	1	1	1	1	1
5	1	1	1	1	1	1	1
6	1	1	1	1	1	1	1
7	1	1	1	1	1	1	1
8	2	1	1	1	1	2	1
9	2	2	1	2	2	2	2
10	2	2	2	2	2	2	2
11	2	2	2	2	2	2	2
12	2	2	2	2	2	2	2
13	2	2	2	2	2	2	2
14	2	2	2	2	2	2	2
15	2	2	2	2	2	2	2
16	2	2	2	2	2	2	2
17	2	2	2	2	2	2	2
18	2	1	1	2	2	2	2
19	2	1	1	1	2	1	2
20	2	1	1	1	1	1	2
21	1	1	1	1	1	1	2
22	1	1	1	1	1	1	1
23	1	1	1	1	1	1	1

LANES REQUIRED TO BE OPEN BY HOUR AND TIME OF DAY

FALL SEASON September 16 through November 30

HR/DAY	MON	TUES	WEDS	THUR	FRI	SAT	SUN
0	1	1	1	1	1	1	1
1	1	1	1	1	1	1	1
2	1	1	1	1	1	1	1
3	1	1	1	1	1	1	1
4	1	1	1	1	1	1	1
5	1	1	1	1	1	1	1
6	1	1	1	1	1	1	1
7	1	1	1	1	1	1	1
8	1	1	1	1	1	1	1
9	2	1	1	2	1	2	2
10	2	1	1	2	2	2	2
11	2	1	2	2	2	2	2
12	2	2	2	2	2	2	2
13	2	2	2	2	2	2	2
14	2	2	2	1	2	2	2
15	2	2	2	2	2	2	2
16	2	2	2	2	2	2	2
17	2	2	2	2	2	2	2
18	2	2	1	1	2	1	2
19	1	1	1	1	1	1	2
20	1	1	1	1	1	1	2
21	1	1	1	1	1	1	1
22	1	1	1	1	1	1	1
23	1	1	1	1	1	1	1

LANES REQUIRED TO BE OPEN BY HOUR AND TIME OF DAY

WINTER SEASON December 1 through February 28

HR/DAY	MON	TUES	WEDS	THUR	FRI	SAT	SUN
0	1	1	1	1	1	1	1
1	1	1	1	1	1	1	1
2	1	1	1	1	1	1	1
3	1	1	1	1	1	1	1
4	1	1	1	1	1	1	1
5	1	1	1	1	1	1	1
6	1	1	1	1	1	1	1
7	1	1	1	1	1	1	1
8	1	1	1	1	1	1	1
9	1	1	1	1	1	2	1
10	2	1	2	1	2	2	2
11	2	2	2	2	2	2	2
12	2	2	2	2	2	2	2
13	2	2	2	2	2	2	2
14	2	2	2	2	2	2	2
15	2	2	2	2	2	2	2
16	2	2	2	2	2	2	2
17	2	2	2	2	2	1	2
18	2	1	1	1	2	1	2
19	1	1	1	1	1	1	2
20	1	1	1	1	1	1	1
21	1	1	1	1	1	1	1
22	1	1	1	1	1	1	1
23	1	1	1	1	1	1	1

ADDITIONAL INSURED PARTIES

The following is a list of additional insured parties:

G4S

NON-REVENUE PASS PLATES

Non-revenue pass plates will be furnished to the Contractor for use between:

Interchange 18 – New Paltz – Route 299 – MP 76.01
Interchange 21 – Catskill – Cairo – Route 32 – MP 113.89

OTHER CONTRACTS

The Contractor will be required to coordinate work with other contractors and NYSTA maintenance forces. The following contracts have been let and may have work in progress during the duration of this contract:

CONTRACT NO.	DESCRIPTION	COMPLETION DATE
None		

U-TURNS/CROSSOVERS

The Contractor may be permitted to use official median openings for U-turns and crossovers with written authorization from Division Traffic Supervision. Official median openings are available at the following locations:

MP 75.62, MP 46.44, MP 100.8, MP 101.76, MP 103.17, MP 103.84, MP 105.83 and MP 107.81

U-turns and crossovers shall not be permitted at toll plazas or on interchange ramps. In addition, tractor trailer combinations are prohibited from U-turns at any location on the Thruway system. These vehicles must exit the Thruway system and re-enter for all direction changes. U-turns may be permitted within a maintenance facility, however, with prior approval from both Division Traffic Supervision and the Thruway Maintenance Supervisor 2 for that facility. All applicable traffic laws must be followed.

ENGINEER'S OFFICE AND CONTRACTOR'S FIELD OFFICE

The location of the Engineer's Office and Contractor's Field Office shall be determined during the Pre-Construction Meeting. The site shall be approved by the Engineer prior to placing the offices and the area shall be kept in a neat, clean condition at all times. The area shall not be used as a staging, storage, equipment or employee parking area.

SPOIL AREA

There is no spoil area available for this contract within the Thruway Authority's/Canal Corporation's right-of-way. Therefore, the Contractor shall remove all surplus material and waste from Thruway Authority/Canal Corporation property. The Contractor shall provide the Thruway Authority/Canal Corporation a copy of all easements and/or access agreement letters received from landowner(s) of off-site disposal area(s) prior to disposal of any material. The easements and/or access agreement letters must include a statement by the Contractor and the landowner that the disposal of the material is in compliance with all applicable federal, state and local laws and regulations.

SPECIAL NOTES

SPECIALTY ITEMS

The following is a list of items that are considered "Specialty Items" as per §108-05:

ITEM	DESCRIPTION
Item 606.xx	Guiderail Items
Item 640.24xx—25	Reflectorized Pavement Markings - Paint
Item 685.xx06—25	Reflectorized Pavement Markings - Epoxy
Item 687.0198—25	Preformed Thermoplastic for Crosswalks
Item 688.0401—25	Preformed Reflectorized Thermoplastic Handicap Parking Pavement Symbols
Item 654.5110—25	Reusable Impact Attenuator

SUPPLEMENTAL INFORMATION FOR BIDDERS

Supplemental information is available to bidders. As indicated below, information is either available on the Thruway Authority's website with the contract plans and proposal or available in electronic format from the Thruway Authority upon request prior to or after the letting date.

The bidder's signature on this proposal certifies that they have made themselves aware of the availability of the information indicated below prior to the letting date.

INFORMATION	NOT AVAILABLE	AVAILABLE ON THRUWAY AUTHORITY WEBSITE	AVAILABLE UPON REQUEST ON CD
Utility Estimate Sheets with Names of Utility Officials	X		
Earthwork Cross Section Sheets		X	
Earthwork Sheets	X		
Drainage Estimate Sheets	X		
Sign Face Layouts	X		
Logs of Subsurface Exploration	X		
Tabulated Results of Probings	X		
Tabulated Depth of Bed Rock	X		
Logs Showing Laboratory Description of Soil Samples	X		
Laboratory Test Data from Soil Samples	X		
Rock Outcrop Maps	X		
Granular Materials Resources Survey Reports	X		
Terrain Reconnaissance Reports	X		
Subsurface Data	X		
Granular Material Sources Report	X		
Pavement/Rock Cores (available for inspection only)	X		
Record Plans		X	
Applicable Asbestos Blanket Variances	X		
Storm Water Pollution Prevention Plan	X		
Shop Drawings	X		
Water Level Records (Canal Projects)	X		
Residency Sheets (Canal Projects)	X		
Foundation Reports	X		
CADD Files of Contract Plans (Unofficial - Not signed or stamped)	X		
Special Reports or Other Information	X		

Hard copies of the supplemental information indicated above are not available. Contractors shall be responsible for their own hard copies of this information at no additional cost to the Authority.

REVISIONS TO NYSDOT STANDARD SPECIFICATIONS

NEW YORK STATE THRUWAY AUTHORITY ADDENDUM TO THE STANDARD SPECIFICATIONS

The Standard Specifications published by the New York State Department of Transportation shall form a part of the agreement. The dated edition that applies to this contract is provided on the front cover of the Proposal. All work contemplated under this contract is to be covered by, and be in conformance with, the Standard Specifications as modified by The New York State Thruway Authority Addendum (TA) to the Standard Specification Books.

The officially adopted Thruway Authority Addendum (TA) to the NYSDOT Standard Specification Books is available on the Thruway Authority website at:
http://www.thruway.ny.gov/business/addendum/index.html
The most recent version of the TA, prior to the project Letting Date, shall apply to this agreement.

All special notes bound in this proposal shall be incorporated. If a conflict exists between the special specifications and/or provisions set forth in this proposal and the specifications and/or provisions set forth in the New York State Department of Transportation's Standard Specifications, those in the Proposal shall govern.

SPECIAL SPECIFICATIONS

SPECIAL NOTE
SPECIAL SPECIFICATION PAY ITEM NUMBERS

The Contractor's attention is directed to the special specification pay item formats used in this contract. Special specification pay items may be presented in two (2) different formats:

Format 1: Pay items for a special specification will have three (3) digits to the left of the decimal point and up to eight (8) digits to the right of the decimal. Spaces may appear in the third to sixth places after the decimal. The 7th and 8th digits to the right of the decimal will represent the origin of the specification.

Format 2: Pay items for a special specification will have three (3) digits to the left of the decimal point and up to eight (8) digits to the right of the decimal. Dashes may appear in the third to sixth places after the decimal. The 7th and 8th digits to the right of the decimal will represent the origin of the specification.

Where items in this contract appear in multiple formats, the formats shall be equated to each other as illustrated below:

FORMAT 1	**FORMAT 2**
XXX.XX XX	XXX.XX--------XX
XXX.XXXX XX	XXX.XXXX----XX
XXX.XXXXXXX	XXX.XXXXXXXX

ITEM 203.24000025 – SHOULDER BACKUP MATERIAL

1. DESCRIPTION:

1.01 This work shall consist of furnishing, placing, grading, compacting and trimming shoulder backup material in conformance with payment lines, grades, thicknesses and typical sections specified in the contract documents or as directed by the Engineer.

2. MATERIALS:

2.01 **General.** Subsection 304-2 shall apply except as indicated below. Wherever the term "subbase course" is used, substitute "shoulder backup material."

Material does not need to be stockpiled. The Authority may sample and test for plasticity, soundness and gradation at its discretion. Material shall be uncontaminated and free of glass.

Unless noted otherwise in the contract documents, the Contractor may choose the type(s) of material from the list given below. Intermixing types will be subject to the approval of the Engineer.

Material deemed inappropriate or impractical by the Engineer for placing, grading, compacting and trimming shall not be used.

A. **Type A (Crusher run, crushed gravel, or crushed stone).** Material shall consist of well-graded crusher run from a stone quarry or gravel source, or crushed Portland cement concrete. The material shall not have particles greater than 1 inch in maximum dimension. Material will be accepted on the basis of a Magnesium Sulfate Soundness Loss of 20 percent or less after four cycles.

B. **Type B (Subbase Course, Type 2).** Material shall meet the requirements of Subbase Course, Type 2. The Engineer will examine each proposed source of material for compliance with the specification requirements.

C. **Type C (Subbase Course, Type 4).** Material shall meet the requirements of Subbase Course, Type 4, except the material furnished shall consist of sand and gravel or a blend of sand, gravel and stone. The Engineer will examine each proposed source of material for compliance with the specification requirements.

D. **Type D (Recycled Asphalt Concrete).** Material shall consist of recycled asphalt concrete pavement produced on the contract or from other sources approved by the Engineer. The recycled asphalt concrete pavement shall not have particles greater than 1½ inches in maximum dimension.

E. **Type E (Select Structural or Granular Fill).** Material shall conform to the soundness, gradation and pH requirements for Select Structural Fill or Select Granular Fill, except the top size shall not exceed that for Type C above.

3. CONSTRUCTION DETAILS:

3.01 The Contractor's equipment, procedures and compaction method shall be approved by the Engineer. The material shall be placed on the grade so as to minimize segregation. Uncontrolled spreading resulting in segregation will not be permitted. The maximum loose lift thickness prior to compaction shall be 6 inches. After compaction, the finished surface shall not extend above, or be more than 0.4 inches below, the edge of shoulder. The maximum deviation from the specified depth shall otherwise not exceed 1½ inches. All surfaces shall be graded to drain.

ITEM 203.24000025 – SHOULDER BACKUP MATERIAL

3.02 The final grade of the material shall be in reasonable close conformity to the lines and grades shown in the contract documents, or to those directed by the Engineer. Additional material shall be placed to fill deficiencies and excess material (trimmings) shall be removed. Trimmings may be incorporated into shoulder backup work at other locations along the project provided the material remains in conformance with the gradation requirement for the selected option. If trimmings cannot be incorporated into shoulder backup work, the material shall become the Contractor's property for disposal or other use in the contract as approved by the Engineer.

4. METHOD OF MEASUREMENT:

4.01 The quantity will be measured for payment as the number of tons of shoulder backup material placed, graded, compacted, and trimmed along the edge of shoulder in accordance with the contract documents or as directed by the Engineer.

4.02 A delivery ticket indicating the total quantity in tons being delivered must accompany each delivery vehicle supplying shoulder backup material. When truck scales are not available within reasonable distance of the material source, as determined by the Engineer, the loose volume of shoulder backup material will be computed using dump truck body measurements and conversion factors. The trucks used for material delivery shall be approved by the Engineer. The trucks shall be uniformly loaded to the satisfaction of the Engineer.

4.03 Additional material used to fill deficiencies will be measured for payment. Trimmings not incorporated into shoulder backup work at other locations along the project will not be measured for payment under this item. The Engineer will adjust the measured quantity accordingly.

4.04 The conversion factor will be 0.05 tons per cubic foot, loose measure, unless otherwise noted in the contract documents.

5. BASIS OF PAYMENT:

5.01 The unit price bid per ton shall include the cost of all labor, equipment and material necessary to satisfactorily complete the work.

ITEM 559.1696--25 - PROTECTIVE SEALING OF STRUCTURAL CONCRETE

1. DESCRIPTION:

1.01 Under this work the Contractor shall furnish and apply, in accordance with this specification, a protective sealer to concrete surfaces, at locations indicated on the plans or where directed by the Engineer.

2. MATERIALS:

2.01 The protective sealer used on concrete surfaces shall be one appearing on the Department's Approved List and shall meet the requirements of the following subsection:

717-03 - Penetrating Type Protective Sealers

3. CONSTRUCTION DETAILS:

3.01 **General**. The Contractor shall provide the Engineer with the sealer Manufacturer's written instructions for application and use, at least five (5) working days before the start of work. Only one (1) brand and specific type of sealer will be allowed for use on each individual element of a project (i.e. each pier, deck, abutment, etc.).

3.02 **Surface Preparation.**

1. **New Concrete.** All required surface texturing, and saw cut grooving, shall be completed before the surface is prepared. All concrete that is to be sealed shall air dry for fourteen (14) days after curing has been removed, or for the length of time specified in the manufacturer s written instructions, whichever is longer. Also, concrete shall air dry for twenty-four (24) hours after curing and/or completion of saw cut grooving. If the concrete is subjected to rain or moisture from other project operations, the surface shall be allowed to dry for a minimum of forty-eight (48) hours, or for a length of time specified in the manufacturer's specifications, whichever is longer, before the sealer is applied. After the drying period has ended, the concrete surface shall be lightly sand or shot blasted, followed by vacuum cleaning, to remove loose particles.

2. **Existing Concrete.** Concrete surfaces to be sealed shall be thoroughly cleaned by light sand or shot blasting, followed by vacuum cleaning, to remove loose particles. If the concrete is subjected to rain or moisture from other project operations, the surface will be allowed to air dry for a minimum of forty-eight (48) hours before the sealer is applied.

Care shall be taken while blast cleaning that all dirt is removed with minimal exposure of coarse aggregate. After cleaning, no blasting residue, laitance, curing compounds, standing water, oil, dirt or other foreign particles shall be present, which may prevent penetration or adhesion of the sealer. All surface preparation work shall be completed and approved by the Engineer, before sealer application can commence.

3.03 **Weather Limitations**. Sealer materials shall not be applied during wet weather conditions or, if in the opinion of the Engineer, adverse weather conditions are anticipated within twelve (12) hours of the completion of sealer application. Ambient and surface temperatures shall be a minimum of 40°F during application and until the sealed concrete is dry to the touch. Application by spray methods will not be permitted during windy conditions, if in the opinion of the Engineer unsatisfactory results will be obtained.

ITEM 559.1696--25 - PROTECTIVE SEALING OF STRUCTURAL CONCRETE

3. CONSTRUCTION DETAILS: (cont'd)

3.04 **Sealer Application**. The sealer shall be used as supplied by the Manufacturer without thinning or alteration, unless specifically required in the Manufacturer's instructions. Thorough mixing of the sealer before and during its use shall be accomplished as recommended by the Manufacturer. Equipment for sealer application shall be clean of foreign materials and approved by the Engineer before use.

A minimum of two (2) coats of the sealer shall be applied to achieve uniform coverage. The total quantity of sealer applied by all coats shall be equal to the quantity required at the application rate specified in the Approved List. The second and each additional coat shall be applied perpendicular to the previous coat. Care shall be taken when applying each coat, such that running or puddling does not occur. Each coat shall be allowed to dry for a minimum of two (2) hours before the next coat is applied. The final coat shall be allowed to dry according to the manufacturer's instructions, before the removal of maintenance and protection of traffic.

On sloping and vertical concrete surfaces, sealer application shall progress from bottom to top. Care shall be taken to ensure that the entire surface of the concrete is covered and all pores filled.

4. METHOD OF MEASUREMENT:

4.01 The quantity to be paid for will be the actual number of square feet of surface area that is provided with protective sealing.

5. BASIS OF PAYMENT:

5.01 The unit price bid per square feet shall include the cost of furnishing all labor, materials, and equipment necessary to satisfactorily complete the work.

ITEM 586.02----25 – DRILLING AND GROUTING BOLTS OR REINFORCING BARS – CONCRETE GROUT

1. DESCRIPTION:

1.01 This work shall consist of furnishing and installing steel bolts, rods, or reinforcing bars, as detailed in the contract documents into concrete grouted holes drilled by the contractor under this item.

2. MATERIALS:

2.01 Steel bolt, rod or anchor bolt material shall be as specified in the contract documents.

2.02 Grout material used shall conform to §701-05 *Concrete Grouting Material*.

3. CONSTRUCTION DETAILS:

3.01 Installation shall conform to Subsection 586-3.01 *Drilling and Grouting Bolts* and the grout manufacturer's installation instructions.

3.02 Hole diameter shall be 1 inch larger than bolt diameter or 1.5 times bolt diameter, whichever is greater.

3.03 Hole depth shall be as specified in the contract documents.

4. METHOD OF MEASUREMENT:

4.01 The work will be measured for payment as the number of bolts, rods, or bars satisfactorily installed.

5. BASIS OF PAYMENT:

5.01 The price bid per each shall include the cost of all labor, material, and equipment, necessary to satisfactory complete the work. No additional payment will be made for extra work required to repair damage to the adjacent concrete due to the contractor's installation operations.

ITEM 603.85010015 - DRAINAGE PIPE, OPTIONAL, (FOR DRIVEWAYS, GRAVEL AND DIRT SURFACED ROADWAYS - ZONE 1 - FILL HEIGHTS 12 inch OR MORE)

Description. Under these items the Contractor shall furnish and install drainage pipes of the indicated sizes and shapes where shown on the plans or where indicated by the Engineer. The type of pipe material selected shall be at the Contractor's option from the list below.

Materials. The type of pipe materials shall meet the requirements given below. Select granular fill used shall meet the requirements for this material given in subsection 203-2.02c.

Non-Reinforced Concrete Pipe	706-01
Reinforced Concrete Pipe	706-02
Reinforced Concrete Elliptical Pipe	706-03
Corrugated Polyethylene Storm Drain Pipe	706-14
Round Corrugated Steel Pipe and Pipe Arches	707-02
Round Corrugated Aluminum Pipe, Pipe Arches and End Sections	707-13

The pipe class or gage shall be as indicated in TABLE 1, Zone 1 for pipes with cover of 12 inch300mm or more.

Construction Details. The Construction Details of subsection 603-3 shall apply. Only one type of pipe material will be allowed in the same run of pipe.

Method of Measurement. Pipe will be measured in foot along the bottom centerline as designated on the plans and specifications or as directed by the Engineer in writing.

Basis of Payment. The accepted quantities of pipe installed under this item will be paid for at the contract price bid which shall include the cost of furnishing all labor, materials and equipment necessary to complete the work.

The cost of any required excavation, sheeting, granular fill and backfill and applying water for compaction shall be included in the price for this item.

ITEM 603.85010015 - DRAINAGE PIPE, OPTIONAL, (FOR DRIVEWAYS, GRAVEL AND DIRT SURFACED ROADWAYS - ZONE 1 - FILL HEIGHTS 12 inch OR MORE)

Payment will be made under:

ITEM NO.	ITEM	PAY UNIT
Item 15603.8501	Drainage Pipe, Optional 12 inch Diameter (For Driveways, Gravel and Dirt Surfaced Roadways - Zone 1 Fill Heights 12 inch or More)	FOOT
Item 15603.8502	Drainage Pipe, Optional 15 inch Diameter (For Driveways, Gravel and Dirt Surfaced Roadways - Zone 1 Fill Heights 12 inch or More)	FOOT
Item 15603.8503	Drainage Pipe, Optional 18 inch Diameter (For Driveways, Gravel and Dirt Surfaced Roadways - Zone 1 Fill Heights 12 inch or More)	FOOT
Item 15603.8504	Drainage Pipe, Optional 21 inch Diameter (For Driveways, Gravel and Dirt Surfaced Roadways - Zone 1 Fill Heights 12 inch or More)	FOOT
Item 15603.8505	Drainage Pipe, Optional 24 inch Diameter (For Driveways, Gravel and Dirt Surfaced Roadways - Zone 1 Fill Heights 12 inch or More)	FOOT

ITEM 603.85010015 - DRAINAGE PIPE, OPTIONAL, (FOR DRIVEWAYS, GRAVEL AND DIRT SURFACED ROADWAYS - ZONE 1 - FILL HEIGHTS 12 inch OR MORE)

TABLE 1 PIPES TO BE USED WHEN COVER IS 12 inch300mm OR MORE - ZONE 1							
CLASS OR GAGE OF PIPE REQUIRED							
FILL HEIGHT FEETMETERS	NON REINFORCED CONCRETE	REINFORCED CONCRETE	REINFORCED CONCRETE (H.E.)	CORRUG POLLY		ROUND CORRUG STEEL	ROUND CORRUG ALUMINUM
	§706-01	§706-02	§706-03	§706-14		§707-02	§707-13
	CLASS	CLASS	CLASS	STIFFNESS (1)		GAUGE	GAUGE
1.00.3	II	II	II	5 %	10 %	18	16
				45	40		
2.00.6	II	II	II	45	40	18	16
3.00.9	II	II	II	45	40	18	16
4.01.2	II	II	II	45	40	18	16
5.01.5	II	II	II	45	40	18	16
6.01.8	II	II	II	45	40	18	16
7.02.1	II	II	II	45	40	18	16
8.02.4	II	II	II	45	40	18	16
9.02.7	II	II	II	45	40	18	16
10.03	NOT ALLOWED	III	III	45	40	18	16
11.03.3	NOT ALLOWED	III	III	45	40	18	16
12.03.6	NOT ALLOWED	III	III	45	40	18	16
13.03.9	NOT ALLOWED	IV	IV	45	40	18	16
14.04.2	NOT ALLOWED	IV	IV	45	40	18	16

ITEM 603.85010015 - DRAINAGE PIPE, OPTIONAL, (FOR DRIVEWAYS, GRAVEL AND DIRT SURFACED ROADWAYS - ZONE 1 - FILL HEIGHTS 12 inch OR MORE)

15.04.5	NOT ALLOWED	IV	IV	45	40	18	16

(1) Tabular values, as determined by ASTM D2412, in joules at 5% and 10% deflection
Gages are based on requirements for 24 inch Round Pipe
For Zone 1 location refer to Highway Design Manual, Figure 8A.

ITEM 606.19010025 – THRIE BEAM RAILING/CORRUGATED BEAM ROCK FENCE

1. DESCRIPTION:

1.01 Under this item the Contractor shall furnish and erect thrie beam railing/corrugated beam rock fence in areas as shown on the plans or as ordered by the Engineer.

2. MATERIALS:

2.01 Materials used for this work shall conform to the following requirements:

1. Thrie beam guide railing, corrugated beam and thrie beam back-up plates shall meet the requirements of Materials Specification Subsection 710-20.

2. All thrie beam sections, including the transition from corrugated beam to thrie beam, shall be 12-gauge.

3. Heavy posts and offset beams shall conform to the requirements of ASTM A36.

4. Bolts, nuts and washers shall conform to the requirements of ASTM 325.

5. All components of the railing, including nuts, bolts and washer shall be galvanized in accordance with Material Specification Subsection 719-01.

6. Splices shall be made with flat, round-headed, grippable, galvanized bolts, and nuts meeting the requirements of Materials Specification Subsection 710-20.

3. CONSTRUCTION DETAILS:

3.01 The thrie beam railing/corrugated beam rock fence, and post and rail transitions shall be erected in the position indicated and as detailed on the plans and in a manner approved by the Engineer.

3.02 Posts shall be driven unless otherwise specified by the Engineer. The driving shall be accomplished with approved equipment and methods that will leave the posts in their final position, free of any distortion, burring or other damage. When posts are driven through asphalt concrete or a bituminous treated material, the Contractor shall take care to prevent damage to paved or treated areas. Large holes and voids caused by driving the posts shall be filled and compacted with a bituminous treated material of asphalt concrete similar to that damaged. The small area adjacent to the post disturbed during installation or where to the post disturbed during installation or where gaps exist at the post after pavement repairs shall be sealed with a bituminous material approved by the Engineer.

3.03 As an alternate to driving posts on unpaved medians and where site conditions are such that driving is not possible, the Contractor shall carefully excavate for all post holes. Post holes and post foundation structures shall be backfilled with backfill materials compacted in accordance with 203-3.15, Fill and Backfill at Structures, Culverts, Pipes, Conduits and Direct Burial Cables.

3.04 The rail system shall be constructed in accordance with the requirements and tolerances provided in Subsection 606-3.01 *General* of the Standard Specifications.

ITEM 606.19010025 – THRIE BEAM RAILING/CORRUGATED BEAM ROCK FENCE

4. METHOD OF MEASUREMENT:

4.01 Measurement will be taken as the number of feet of railing installed. Measurement will be taken along the top of the thrie beam, end-to-end of railing between the limits indicated on the contract plans. No additional measurement will be taken for overlapping sections of railing. If transition sections are installed, measurement will be taken to the end of the transition section indicated on the contract plans.

5. BASIS OF PAYMENT:

5.01 The price bid shall include the cost of all labor, materials and equipment including: field work necessary to adjust, set and shim posts and/or railing, repair galvanizing after tack welding, drilling, bolting or other operations that might damage the galvanizing; and all other incidental expenses necessary to complete the work.

ITEM 606.2650NN08 – SPECIAL TRANSITION

DESCRIPTION:

This work shall consist of installing barrier and/or guide railing transitions as shown in the Contract Documents.

MATERIAL:

All applicable provisions of §606-2 shall apply.

CONSTRUCTION DETAILS:

Railing and/or barrier shall be erected and attached as specified in the Contract Documents. All applicable provisions of §606-3 shall apply.

METHOD OF MEASUREMENT:

Transitions will be measured by the actual number installed. The pay limits for each special transition are shown in the Contract Documents.

BASIS OF PAYMENT:

The price shall include the cost of all labor, material and equipment, including field work necessary to adjust existing barrier.

Note: NN denotes items serialized by each transition type.

ITEM 606.3403--25 – END TERMINAL FOR 31-INCH HIGH HPBO (MOD.) CORRUGATED BEAM GUIDE RAILING

1. DESCRIPTION:

1.01 This work shall consist of furnishing and installing end terminals for 31-inch high Modified Heavy Post Blocked-Out (HPBO (Mod.)) Corrugated Beam Guide Railing in accordance with the Contract Documents and the manufacturer's directions and drawings.

2. MATERIALS:

2.01 Materials shall meet the requirements specified in the following subsections of Standard Specifications:

Wood and Timber Posts and Timber Blockouts	710-13
Corrugated Beam Guide Railing and Median Barrier	710-20
Plastic and Synthetic Block-Outs for Heavy Post Guide Rail Systems	710-26
Galvanized Coatings and Repair Methods	719-01
Reflective Sheeting, Class B	730-05

2.02 The posts shall be steel and of the type and dimensions indicated on the manufacturer's drawings, or where applicable the Standard Sheets.

2.03 Posts, soil plates, struts, bearing plates, impact heads, and other miscellaneous steel parts shall meet the requirements of ASTM A36 unless specified otherwise. Fasteners shall be as indicated on the manufacturer's drawings. All metal components shall be hot dip galvanized.

2.04 Reflective sheeting shall be provided by the manufacturer and shall cover the entire free end of the terminal. The reflectorization shall consist of alternating reflectorized four (4) inch yellow and non-reflectorized 4½ inch black stripes oriented at a 45 degree angle, with the lower edge of the stripes near the traveled way.

2.05 **Basis of Acceptance.** The barrier system shall be obtained from one of the manufacturers listed on the table below, or an approved equal, as approved by the Director, Office of Design.

2.06 **Basis of Approval.** End terminals shall be NCHRP 350 Test Level 3 approved.

Product	Manufacturer	Contact Information
SKT-SP-MGS Terminal 31" Top of Rail (with Hinged Posts #1 and #2; and W6x9 x 6'-0" Standard HPBO Mod. Guiderail Posts #3 through #8)	Road Systems, Inc.	Big Spring, TX (432) 263-2435 www.roadsystems.com

End terminals which can only be installed in a flared configuration will not be approved.

3. CONSTRUCTION DETAILS:

3.01 The requirements of §606-3.01 and §606-3.04 of the Standard Specifications shall apply, except as listed below:

A. The end terminals shall be installed after grading is completed at the locations indicated in the Plans, or where directed by the Engineer. Grading work shall be coordinated with the installation of the guide rail or removal of existing anchorage units to minimize the time the traveling public is exposed to unanchored runs of guide rail.

B. During periods when the public is exposed to unanchored guide rail, there shall be plastic drums, or other devices approved by the Engineer, placed in advance of the unanchored run and in advance of the ends of the rail. In addition, the ends of the rail shall be brought to the ground level, twisted over to lay flat, and shall be pinned to the ground.

C. In the event the end terminals become damaged, the units shall be promptly repaired. Unless another period is indicated in the Contract Documents, "promptly repaired" shall mean repaired with fourteen (14) calendar days.

4. METHOD OF MEASUREMENT:

4.01 The work will be measured as the number of end terminals for 31-inch high Modified Heavy Post Blocked-Out (HPBO (Mod.)) Corrugated Beam Guide Railing of the indicated type satisfactorily furnished and installed in accordance with these specifications. The payment limits for these units shall extend from the free end of the end terminal to the center of the ninth guide rail posts, which is located approximately 52 feet distant from the end.

This will not match the various lengths of the products supplied by the terminal manufacturers. Where the terminals are shorter, the Contractor shall provide 31-inch high Modified Heavy Post Blocked-Out (HPBO (Mod.)) Corrugated Beam Guide Railing to make up the difference between the product length and the payment length.

5. BASIS OF PAYMENT:

5.01 The unit bid price per end terminal for 31-inch high Modified Heavy Post Blocked-Out (HPBO (Mod.)) Corrugated Beam Guide Railing of the indicated type shall include the cost of all labor, materials, and equipment necessary to satisfactorily complete the work.

5.02 The cost of earthwork, grading, top soiling, seeding, and vegetation control strips shall be paid for separately.

ITEM 606.46000025 – CRASH CUSHION ATTENUATING TERMINAL 350 (CAT-350)

1. DESCRIPTION:

1.01 This work shall consist of furnishing and installing the Crash Cushion Attenuating Terminal 350 (CAT-350) system at locations shown on the plans, or where directed by the Engineer, in accordance with the Contract Documents and the manufacturer's requirements.

2. MATERIALS:

2.01 **Crash-Cushion.** The crash-cushion shall be the CAT-350 system fabricated by:

Trinity Highway Products
1170 N. State Street
Girard, OH 44420
800-321-2755

All parts shall be new. The configuration of the CAT-350 system shall be as indicated in these specifications and on the manufacturer's drawings.

2.02 Materials used in the manufacture of the CAT-350 system shall meet the requirements of the following subsections and ASTM Specifications:

Wood Preservative - Waterborne	708-31
Wood and Timber Posts and Timber Blockouts	710-13
Corrugated Beam Guide Railing and Median Barrier	710-20
Galvanized Coatings and Repair Methods	719-01
Reflective Sheeting	730-05
Steel Blockouts, Steel Posts, Soil Plates, Struts, Bearing Plates	ASTM A36

A. The dimensions of steel blockouts and breakaway wood posts shall conform to those shown on the manufacturer's drawings.

B. Breakaway wood posts shall be pressure treated in accordance with §708-31.

C. The flat beam side plate shall meet the requirements of §710-20.

D. Steel foundation tubes shall meet the requirements of §710-21.

E. All metal parts and components shall be hot dip galvanized in accordance with §719-01.

2.03 The nose of the CAT-350 system shall be delineated with a Type 3 object marker. The object marker shall be black opaque stripes on ASTM Type IX (Class E) yellow retroreflective sheeting. The pattern shall be 4½-inch diagonal black stripes alternating with 4-inch diagonal yellow stripes. The reflective sheeting shall be rectangular and conform to the size of the approach end of the crash cushion. The reflective sheeting shall be firmly bonded to the crash cushion with an adhesive; mechanical fasteners will not be allowed.

3. CONSTRUCTION DETAILS:

3.01 Subsection 606-3.01 of the Standard Specifications shall apply.

3.02 The 12'-6" tail-end portion of the CAT-350 system shall be heavy post blocked-out corrugated beam median barrier with wood, plastic or synthetic blockouts meeting the requirements of the current NYSDOT standard sheets.

3.03 The alternating black and retroreflective yellow stripes shall slope downward at an angle of 45 degrees toward the side of the crash cushion on which traffic is to pass. If traffic can pass to either side of the crash cushion, the alternating black and retroreflective yellow stripes shall form chevrons pointing upwards.

3.04 If the CAT-350 system is damaged, the unit shall be repaired within fourteen (14) calendar days of the occurrence unless noted otherwise in the Contract Documents.

4. BASIS OF ACCEPTANCE:

4.01 Acceptance of the CAT-350 system will be based on its conformance with the manufacturer's drawings and certificate of compliance with these specifications.

5. METHOD OF MEASUREMENT:

4.01 The work will be measured for payment as the number of CAT-350 systems installed in accordance with the plans, standard sheets, manufacturer's drawings, manufacturer's directions and/or as directed by the Engineer. The payment limits extend from the nose with reflective sheeting to the center of the eighth post (second steel post) in the tail-end portion of the crash cushion.

5. BASIS OF PAYMENT:

5.01 The unit price bid shall include the cost of all labor, materials and equipment necessary to satisfactorily complete the work, including the necessary concrete, excavation, backfill and delineation.

ITEM 606.59200125 - RESETTING END TERMINALS FOR BOX BEAM GUIDE RAIL AND MEDIAN BARRIER

1. DESCRIPTION:

1.01 Under this item the Contractor shall reset Type III Box Beam Guide Rail and Type C Box Beam End Terminals at the location(s) shown on the plans and in accordance with these specifications, applicable Standard Sheets, Contract Drawings and Manufacturer's directions and drawings. The Engineer will be sole determiner in the event there are differences between the Specifications, Standard Sheets, Manufacturer's directions and drawings.

2. MATERIALS:

2.01 Subsection 606-2.08 of the Standard Specifications shall apply.

3. CONSTRUCTION DETAILS:

3.01 The Contractor shall remove, store, clean and reset the box beam end terminal as shown on the plans or as directed by the Engineer. The construction details of Subsection 606-3.06 and 606-3.12 of the Standard Specifications shall apply.

4. METHOD OF MEASUREMENT:

4.01 The quantity measured for this item shall be the number of end terminals reset in accordance with the requirements of the Contract Documents and in a manner approved by the Engineer.

5. BASIS OF PAYMENT:

5.01 The unit price bid for each end assembly reset shall include the cost of furnishing all labor, materials and equipment necessary to complete the work. Progress payments for the quantity reset will be made in accordance with Subsection 606-5.05(A).

ITEM 606.69100125 - REMOVING AND STORING END TERMINAL FOR HEAVY POST BLOCKED OUT CORRUGATED GUIDE RAIL AND MEDIAN BARRIER

1. DESCRIPTION:

1.01 The work under this item shall consist of removing and storing the existing End Terminal for HPBO Corrugated Guide Rail and Median Barrier, ET 2000, SKT 350, Brakemaster, CAT 350 or any other approved equal. This work shall be completed in accordance with these Special Specifications, applicable standard sheets, contract drawings and the manufacturer's directions and drawings. The Engineer will be sole determiner in the event there are differences between specifications, standard sheets, manufacturer's directions and drawings.

2. MATERIALS:

2.01 The materials comprising the existing end terminal shall be carefully disassembled and stored at a pre-determined Thruway Section Maintenance Facility if found to be in satisfactory condition as determined by the Engineer. The Engineer will be the sole determiner in the event existing terminal components are damaged by the Contractor's careless removal operations. Replacement costs will be the Contractor's responsibility. Replacement materials shall meet the material requirements for the appropriate new End Terminal for HPBO Corrugated Guide Rail, ET 2000, SKT 350, Brakemaster, CAT 350 or any other approved equal.

3. CONSTRUCTION DETAILS:

3.01 The existing End Terminal shall be removed and stored in accordance with the special specifications and the plans or in accordance with manufacturer's instructions and the direction of the Engineer. The work including the necessary post hole repair work, shall be coordinated with any adjacent guide rail work to minimize the time traffic is exposed to unanchored runs of guide rail. This period shall not exceed fourteen calendar days. During periods when the public is exposed to the unanchored guide rail, plastic drums or other devices approved by the Engineer shall be placed in advance of the unanchored run and in advance of the exposed ends of the rail. In addition, the exposed ends of the rail shall be brought to the ground level, twisted over to lay flat and pinned to the ground.

The disassembled terminal end shall be "packaged" such that all related nuts, bolts, washers, etc. are stored in a neat orderly manner with their related components.

4. METHOD OF MEASUREMENT:

4.01 The work will be measured as the number of End Terminals for Heavy Post Blocked-Out Corrugated Beam Guide rail and median barrier removed and stored satisfactorily in accordance with these specifications. The payment limits for these units shall extend from the front of the guide rail extruder, or median barrier nose piece to the center of the last associated guide rail post, which is located no more than 52 feet from the front of the end terminal. (Generally, 52 feet for ET 2000 and SKT 350, 33 feet for Brakemaster and CAT 350. Actual length determined by Engineer in the field.)

5. BASIS OF PAYMENT:

5.01 The unit price bid shall include the cost of furnishing all labor, equipment, and materials necessary to complete the work. With the exception of post hole repair work, the cost of earthwork, grading, top soiling, and seeding shall be measured and paid for separately. The cost to repair units damaged by public travel will be borne by the Contractor or by the Authority in accordance with provisions of §107-09 Damage.

06/01 JRB
Rev. 10/04

ITEM 606.69200125 - REMOVING AND STORING END TERMINAL FOR BOX BEAM GUIDE RAIL AND MEDIAN BARRIER

1. DESCRIPTION:

1.01 The work under this item shall consist of removing and storing the existing End Terminal for Box Beam Guide Rail and Median Barrier, Type III and Type C. This work shall be completed in accordance with these Special Specifications, applicable standard sheets, contract drawings and the manufacturer's directions and drawings. The Engineer will be sole determiner in the event there are differences between specifications, standard sheets, manufacturer's directions and drawings.

2. MATERIALS:

2.01 The materials comprising the existing end terminal shall be carefully disassembled and stored at a pre-determined Thruway Section Maintenance Facility if found to be in satisfactory condition as determined by the Engineer. The Engineer will be the sole determiner in the event existing terminal components are damaged by the Contractor's careless removal operations. Replacement costs will be the Contractor's responsibility. Replacement materials shall meet the material requirements for the appropriate new End Terminal for Box Beam Guide Rail and Median Barrier.

3. CONSTRUCTION DETAILS:

3.01 The existing End Terminal shall be removed and stored in accordance with the special specifications and the plans or in accordance with manufacturer's instructions and the direction of the Engineer. The work including the necessary post hole repair work, shall be coordinated with any adjacent guide rail or median barrier work to minimize the time traffic is exposed to unanchored runs of guide rail. This period shall not exceed fourteen calendar days. During periods when the public is exposed to the unanchored guide rail or median barrier, plastic drums or other devices approved by the Engineer shall be placed in advance of the unanchored run and in advance of the exposed ends of the rail. In addition, the exposed ends of the rail shall be brought to the ground level, twisted over to lay flat and pinned to the ground.

The disassembled terminal end shall be "packaged" such that all related nuts, bolts, washers, etc. are stored in a neat orderly manner with their related components.

4. METHOD OF MEASUREMENT:

4.01 The work will be measured as the number of End Terminals for Box Beam Guide rail and median barrier removed and stored satisfactorily in accordance with these specifications. The payment limits for these units shall extend from the front of the guide rail or median barrier to the center of the last associated guide rail post, which is located no more than 51 feet from the front of the end terminal.

5. BASIS OF PAYMENT:

5.01 The unit price bid shall include the cost of furnishing all labor, equipment, and materials necessary to complete the work. With the exception of post hole repair work, the cost of earthwork, grading, top soiling, and seeding shall be measured and paid for separately. The cost to repair units damaged by public travel will be borne by the Contractor or by the Authority in accordance with provisions of §107-09 Damage.

ITEM 606.8103--25 - REMOVING AND DISPOSING GUIDE RAIL TRANSITION CORRUGATED BEAM TO BOX BEAM (ONE OR TWO WAY OPERATION) INCLUDING TRANSITION ANCHORAGE UNIT

1. DESCRIPTION:

1.01 This work shall consist of the removal and disposal of guide railing transition corrugated beams to box beam, posts and component parts including transition anchorage unit in accordance with these specifications and as shown on the plans or as established by the Engineer.

2. MATERIALS:

2.01 (Not Specified)

3. CONSTRUCTION DETAILS:

3.01 The Contractor shall remove the existing transition corrugated beam to box beam including transition anchorage unit and remove them from the site of the work. Holes shall be backfilled with a suitable material and compacted in a manner approved by the Engineer. Proper precautions shall be taken to protect traffic at all times.

4. METHOD OF MEASUREMENT:

4.01 Transitions for guide railing including transition anchorage unit will be considered as one unit and will be measured by the number of units removed and disposed of as herein specified or ordered by the Engineer.

5. BASIS OF PAYMENT:

5.01 The unit price bid for the removal and disposal of guide rail transition, including transition anchorage unit shall include the cost of excavation, backfill, furnishing all labor, materials and equipment necessary to complete the work.

ITEM 606.92010125 – REPLACE GUIDE RAIL SPLICE BOLTS

1. DESCRIPTION:

1.01 This work shall consist of removing and disposing non-standard splice bolts from existing guide railing systems and replacing with new splice bolts in accordance with the contract documents and as directed by the Engineer. Guide railing systems include Corrugated Beam Guide Railing and Median Barrier, Heavy-Post Blocked-Out Corrugated Beam Guide Railing and Median Barrier, and Thrie-Beam Guide Railing.

2. MATERIALS:

2.01 Splice bolts shall be flat, round-headed, grippable, galvanized bolts and nuts as shown in this specification. Bolts shall be ASTM A307 Grade A. Nuts shall be ASTM A563 Grade A or better. Bolts and nuts shall be galvanized according to the provisions of Section 719-01 *Galvanized Coatings and Repair Methods, Type II.*

3. CONSTRUCTION DETAILS:

3.01 Only one splice location shall be worked at a time. Work shall begin from the approach end of the guide rail system and continue in the direction of traffic. An unbolted splice will not be allowed overnight.

3.02 Existing bolts shall be removed with an impact wrench or other approved method that does not damage the galvanizing on the existing guide rail. Cutting torches will not be allowed. Any damage to the galvanizing on the existing guide rail shall be repaired in accordance with Section 719-01 *Galvanized Coatings and Repair Methods*, *Repair*, at no additional cost to the Authority.

3.02 Work shall not be performed within the pay limits of a proprietary end terminal.

4. METHOD OF MEASUREMENT:

4.01 The quantity to be measured for payment will be the number of guide rail splice bolts furnished and installed in accordance with the plans, specifications, standard sheets, and as directed by the Engineer.

5. BASIS OF PAYMENT:

5.01 The unit price bid for each guide rail splice bolt shall include the cost of all labor, materials and equipment necessary to complete the work.

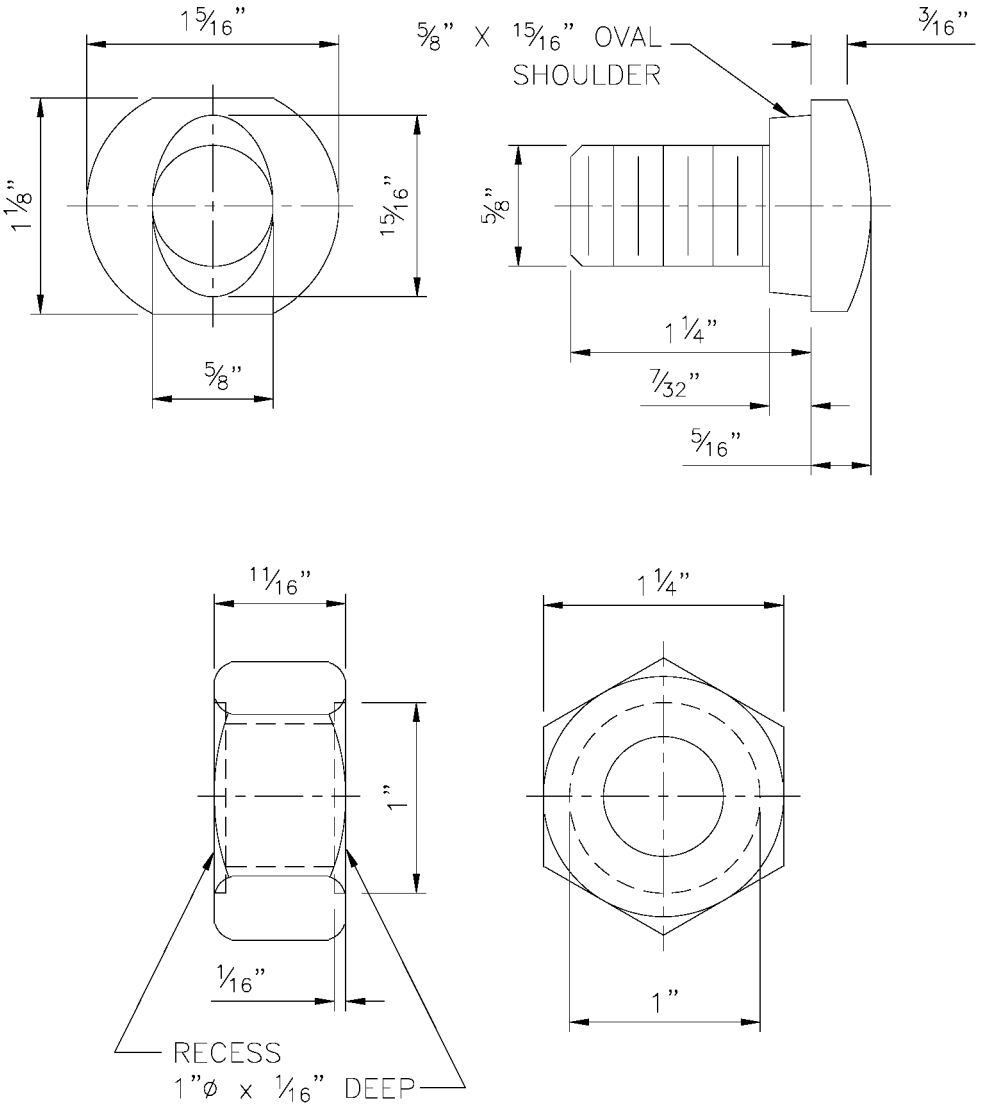

NEW YORK STATE THRUWAY AUTHORITY DEPARTMENT OF ENGINEERING SERVICES	
ITEM 606.92010125	
DRAWN BY: CAD DATE: 05/11/11 CHECKED BY: BDK SCALE: NOT TO SCALE	2 OF 2

ITEM 607.96000008 - REMOVE AND DISPOSE OF EXISTING FENCE

DESCRIPTION:

The contractor shall remove existing fence in accordance with the plans, specifications and directions of the Engineer. All references to "fencing" shall include existing gates, if any to be removed.

MATERIALS:

Materials needed for modifying end sections shall conform to the requirements of Section 710 of the Standard Specifications or shall conform to the material requirements of the existing fence, as directed by the Engineer.

Concrete for footings shall conform to Section 607-2.01 of the Standard Specifications.

CONSTRUCTION DETAILS:

The contractor shall remove and dispose of the existing fence to a point shown on the plans or where directed by the Engineer. If a portion of the existing fence is to remain, the remaining end section shall be modified to adequately secure the fencing. This modified section shall include all hardware necessary to secure the fencing in a manner similar to the existing end section or as directed by the Engineer. Parts salvaged from the removed portion, acceptable to the Engineer, may be reused in the end section.

All work shall be done in a workmanlike manner with care taken not to disturb the surrounding area or existing fence to remain. Any damage to the area or existing fence to remain caused by the contractor's operations shall be repaired to the original condition at no expense to the state. Any concrete post footings shall be either broken up and removed or removed in one piece as determined by the contractor and approved by the Engineer. All post holes shall be filled to meet existing grade. All excavation and backfill shall conform to Section 203 "Excavation and Embankment".

METHOD OF MEASUREMENT:

This work will be measured as the number of feet of fence removed in accordance with the plans or as directed by the Engineer. An additional 10 foot allowance will be paid for each end section modified to secure the remaining fence.

BASIS OF PAYMENT:

The unit price bid shall include the cost of all labor, equipment and materials necessary to complete the work, including the cost of any fill required to fill the post holes.

ITEM 617.01010024 – CONTROLLING INVASIVE PLANT SPECIES WITH HERBICIDES
ITEM 617.01020024 – CONTROLLING INVASIVE PLANT SPECIES BY PULLING
ITEM 617.01030024 – CONTROLLING INVASIVE PLANT SPECIES BY EXCAVATION
ITEM 617.10000024 – DISPOSAL OF MATERIAL CONTAINING INVASIVE PLANT SPECIES
ITEM 617.11000024 – EQUIPMENT CLEANING FOR INVASIVE PLANT SPECIES

DESCRIPTION. This work shall consist of control and disposal of identified invasive species and disposal of infested soil in accordance with the contract documents and as directed by the Engineer. The work described is to control the spread and/or re-growth of invasive species. Specific control methods to be used are identified in the Special Note entitled *Controlling Invasive Plant Species*.

MATERIALS.

Herbicide: EPA/NYSDEC Label-approved herbicide conforming to §713-13 *Pesticides*. Surfactants added to increase the effectiveness of the herbicide may be used, in accordance with manufacturers' labels. Tracer dye shall be used in herbicide mixes to aid in identifying application coverage. Additional permitting from regulatory agencies may be required prior to application.

CONSTRUCTION DETAILS.

The work shall be perform ed in accordance w ith the requirem ents of Special Note entitled *Controlling Invasive Plant Species*.

Site Preparation. Refer to the Special Note for specific control m ethods of targeted invasive species.

Controlling Invasive Plant Species. Three methods are described:

1. Pulling.

a. Contractor shall hand-pull, or rem ove using hand tools, all stem s and associated roots within the designated areas shown in the contract docum ents at the tim es specified.
b. All plant parts shall be carefully placed in black plastic bags (4 mil minimum) and securely tied or sealed.
c. Care shall be taken in pulling stem s to rem ove as m uch of the root m ass as possible.
d. Supplemental digging using hand tools to remove roots/ rhizomes or herbicide treatment may be required. Refer to the Special Note entitled *Controlling Invasive Plant Species*.
e. Plant material shall be treated and/or transported in accordance with *Disposal of Material.*

2. Excavation.

a. Mechanical methods may be used to remove plant material.
b. Removal perimeter shall extend no less than 16 ft beyond the leading edge of

ITEM 617.01010024 – CONTROLLING INVASIVE PLANT SPECIES WITH HERBICIDES
ITEM 617.01020024 – CONTROLLING INVASIVE PLANT SPECIES BY PULLING
ITEM 617.01030024 – CONTROLLING INVASIVE PLANT SPECIES BY EXCAVATION
ITEM 617.10000024 – DISPOSAL OF MATERIAL CONTAINING INVASIVE PLANT SPECIES
ITEM 617.11000024 – EQUIPMENT CLEANING FOR INVASIVE PLANT SPECIES

invasive species stand.

c. Excavation shall extend to a minimum depth of 6 ft below proposed final grade.
d. Excavated area shall be backfilled with uncontaminated suitable material.
e. Excavated material shall be treated and/or transported according to *Disposal of Material.*

3. Herbicide Application.

a. The herbicide applicator shall be a NYSDEC Certified Commercial Pesticide Applicator. In planning the use of herbicides to control invasive species, the Contractor and Certified Pesticide Applicator shall ensure that herbicides used are labeled for the target species- through the pesticide label or through the unlabeled pest process.
b. Herbicide shall be applied by hand-sprayer, back-pack, wick application, stem injection or herbicide clippers.
c. Site preparation for herbicide application shall include cutting dormant stalks and actively growing plants approximately 4 weeks prior to first annual treatment.
d. Contractor shall be responsible for all public notification and posting requirements.

Disposal of Material. Cut plant material shall be placed in (4 mil minimum thickness) black plastic bags for transportation out of the area. Bags shall be securely tied or sealed. Soil containing seeds, roots and/or rhizomes shall be wrapped in black plastic sheeting (4 mil minimum thickness) and transported in a manner which prevents the spread of the contaminated material during transport. Acceptable disposal methods can be one of the following:

- *Bury* - Soil containing invasive plant material shall be buried either in an excavated pit or fill section, covered with at least 6 ft of uncontaminated fill material (eg: embankment in place, topsoil, etc.) Soil containing invasive plant material shall not be buried within 100 ft of a water body (including wetlands). Disposal of surplus excavated material generated from this disposal method shall be at no additional cost to the State.
- *NYSDEC Quarry/ Mine Reclamation* - Where feasible and accessible, material shall be transported to an approved quarry/ mine accepting invasives-contaminated fill material.
- *Landfill/ Incinerator* - Plant material or spoil containing invasive plant material shall be disposed of in a municipal solid waste management facility or incinerator that is operated under current 6 NYCRR Part 360 regulations.
- *Approved NYSDOT disposal facility* - Where available, plant material or spoil containing invasive plant material may be disposed of in regional invasive species disposal facilities as identified in the contract documents.

ITEM 617.01010024 – CONTROLLING INVASIVE PLANT SPECIES WITH HERBICIDES
ITEM 617.01020024 – CONTROLLING INVASIVE PLANT SPECIES BY PULLING
ITEM 617.01030024 – CONTROLLING INVASIVE PLANT SPECIES BY EXCAVATION
ITEM 617.10000024 – DISPOSAL OF MATERIAL CONTAINING INVASIVE PLANT SPECIES
ITEM 617.11000024 – EQUIPMENT CLEANING FOR INVASIVE PLANT SPECIES

Stockpiling and stockpile location(s) of soil containing invasive plant material shall be approved by the Engineer. Invasive species spoil stockpiled on site shall be identified as such so not to be inadvertently used in a manner that is not consistent with *Disposal of Material*. Stockpiles shall be stabilized to prevent erosion and transport of invasive material. Stockpiling shall be at no cost to the State.

The Contractor shall identify the disposal location(s) and obtain approval from the Engineer at least 5 calendar days prior to disposal.

Equipment Cleaning. Equipment used in areas containing invasive plant species shall be power-washed (1000 psi minimum) and cleaned with clean water (without using cleaning soaps or chemicals) before leaving the invasive control/removal area to prevent the spread of seeds, roots, or other viable plant parts. Water may be supplied by a municipal water source or may be pumped from an on-site or local surface water source. If water is drawn from a local water source, to protect aquatic life, there shall not be any loss of water elevation at the site of withdrawal or immediately downstream of the site. Withdrawal from surface waters may be subject to USACOE, NYSDEC and other regulations. Equipment cleaning stations shall include either a constructed cleaning station conforming to §209-3.13 *Construction Entrances* or a portable commercial cleaning station with a rack. Loose plant and soil material that has been removed from clothing, boots and equipment, or generated from cleaning operations, including constructed cleaning station material after use, shall be disposed of as described in *Disposal of Material*. If sufficient space is not available or precluded by terrain to provide a cleaning station on site, upon approval by Engineer, equipment used within an infested area may be power-washed adjacent to the invasive control/removal area, provided that the wash water (including spray) does not discharge within 100 ft of any stream, existing or proposed wetland, or stormwater conveyance (eg: ditch, catch basin, etc). If upon completion of construction, the area remains infested with invasive plants, the invasive material generated may remain in the infested area.

Care of Controlled Areas During Construction. The Department will inspect all treated areas approximately every 4 weeks during the growing season (or during the following growing season for fall applications if contract continues into the following growing season). If additional treatments are necessary, the Contractor shall apply treatment to all identified areas within 10 calendar days of notification. Additional treatments will be considered extra work.

METHOD OF MEASUREMENT.

Herbicides. The quantity of controlling invasive species to be measured for payment will be in square feet of surface area controlled, measured to the nearest square foot.

Pulling. The quantity of controlling invasive species to be measured for payment will be in

ITEM 617.01010024 – CONTROLLING INVASIVE PLANT SPECIES WITH HERBICIDES
ITEM 617.01020024 – CONTROLLING INVASIVE PLANT SPECIES BY PULLING
ITEM 617.01030024 – CONTROLLING INVASIVE PLANT SPECIES BY EXCAVATION
ITEM 617.10000024 – DISPOSAL OF MATERIAL CONTAINING INVASIVE PLANT SPECIES
ITEM 617.11000024 – EQUIPMENT CLEANING FOR INVASIVE PLANT SPECIES

square feet of surface area controlled, measured to the nearest square foot.

Excavation. The quantity of controlling invasive species to be measured for payment will be in cubic yards removed, measured to the nearest cubic yard.

Disposal of Material Containing Invasive Plant Species. The quantity to be measured for payment of contaminated material disposal will be in cubic yards removed, measured to the nearest cubic yard.

Equipment Cleaning for Invasive Plant Species. The quantity to be measured for payment of equipment cleaning will be on a lump sum basis.

BASIS OF PAYMENT.

Herbicides. The unit price bid will include the cost of all labor, materials and equipment necessary to perform site preparation and satisfactorily complete the work.

Pulling. The unit price bid shall include the cost of all labor, materials and equipment necessary to satisfactorily complete the work.

Excavation. The unit price bid shall include the material and work required to perform site preparation, excavation, backfill the excavated area and surplus material removal. Backfill quantity shall not exceed the quantity of material excavated.

Disposal of Material Containing Invasive Plant Species. The unit price bid shall include the cost of all labor, materials and equipment necessary to satisfactorily complete the work.

Equipment Cleaning for Invasive Plant Species. The lump sum price bid shall include the cost of all labor, materials and equipment necessary to satisfactorily complete the work.

Payment will be made under:

Item No.	Item	Pay Unit
617.01010024	Controlling Invasive Plant Species with Herbicides	Square Foot
617.01020024	Controlling Invasive Plant Species by Pulling	Square Foot
617.01030024	Controlling Invasive Plant Species by Excavation	Cubic Yard
617.10000024	Disposal of Material Containing Invasive Plant Species	Cubic Yard
617.11000024	Equipment Cleaning for Invasive Plant Species	Lump Sum

ITEM 619.96----25 – SPEED DISPLAY TRAILER

1. DESCRIPTION:

1.01 Under this item the Contractor shall furnish, install, maintain, relocate, and remove an all LED, two digit, and trailer mounted speed display sign. The system shall be equipped with traffic radar operating in an "approach only" mode such that only the speeds of approaching vehicles will be displayed. The unit must be capable of displaying all speeds between ten miles per hour (10 MPH) and ninety-nine miles per hour (99 MPH). The system shall provide for the display of a static speed limit sign meeting the requirements of the National Manual on Uniform Traffic Control Devices (MUTCD) and NYS Supplement, mounted above, or adjacent to, the LED display.

2. MATERIALS:

2.01 **Changeable Display:**

A. **Description:** The changeable display shall be mounted within a sign panel meeting the layout, text size, and reflectivity requirements of National MUTCD and NYS Supplement on a white background. The sign panel shall match the static sign panel described in Section 2.06. The text of the sign shall be "**Your Speed**". The changeable display shall consist of an LED pixel matrix meeting the following requirements:

1. Two (2) Individual Characters are to be a minimum of (18 inches high each).
2. LED's shall be Amber colored (Florescent yellow optional)
3. Minimum of 4 LED's per pixel
4. LED Characters must be visible from 885 feet.
5. 100% Solid state configuration with no moving parts
6. The LED matrix shall have a protective cover such as Lexan or similar
7. Brightness control of the LED's which can be adjusted for daytime/nighttime use.

For the purposes of this specification, the "Display Panel" refers to the combination of the changeable changeable LED display and the sign panel it is mounted within.

B. **Display Power Supply:** The power supply for the LED display is to be sufficient to operate the LED pixels for both daylight and nighttime conditions, be suitably regulated and temperature-stable and fully operational in the temperature range of -22°F to 150°F. In addition, the power supply shall satisfy the following requirements:

1. All wiring to be comprised of standardized wiring harnesses and locking connectors.

2. Self-contained 12 volt DC battery system operated with sufficient power to operate the sign for a period of 14 consecutive days before requiring a recharge.

2.02 **Charging System:**

A. **Description:** The charging system is to be arranged in such a manner as to easily facilitate recharging of the battery system. The 110 volt AC charging system shall initiate charging automatically when 110 volt AC service is connected, and must be capable of completely charging the battery pack within a 72 hour time period. The recharging system is to be designed so that a fully charged unit can remain plugged-in without damaging the system. The trailer must also be equipped with a standard 110 volt AC receptacle as well as a temperature stable 110 volt AC battery trickle charger and ammeter. Incorporation of a solar

ITEM 619.96----25 – SPEED DISPLAY TRAILER

2. MATERIALS: (cont'd)

2.02 **Charging System:** (cont'd)

powered option must include the necessary provisions to allow switching the recharging mode between the 110 volt AC and the solar panel with minimal effort. The solar powered option shall be fully integrated into the unit power system.

2.03 **Display Control Unit**

A. **Description:** The display control unit shall be 100% solid state with no moving parts or switches, shall be operable in 0-95% non-condensing humidity conditions at temperatures from minus -22°F to 150°F, and shall include provision(s) for protection against damage should the 12 volt DC power source be incorrectly connected with the leads reversed.

B. **Mounting:** The display control unit shall be mounted in such a manner as to minimize potential damage from the elements, including road salt and road spray. The LED display unit is to be contained in a vandal resistant housing.

C. **Wiring:** The control unit shall contain all of the terminal connectors for the display panel wiring harnesses and the keyboard terminal harness.

2.04 **Display Operating Software:**

A. **Description:** The display operating software shall provide for operator interaction with the sign system and must include industry standard levels of security and access. Password protection and/or access codes are to be included in order to limit access to the sign control menus to authorized persons.

B. **Diagnostics:** The display operating software shall provide sufficient diagnostic monitoring for the following elements:

1. LED Status – Including LED brightness (as % of maximum) for corresponding photocell ambient light levels.
2. Sign Status – Diagnostic information on the power system and sign performance.
3. Radar Status – Raw (serial) data from the radar unit for diagnostic purposes.
4. Solar Status – System Diagnostic information (for units provided with a Solar Powered Option).

C. **Main Menu:** The software shall provide full control of the LED display. The software and control keys shall include the ability to perform the following:

1. User-defined "minimum" and "maximum" speed to display.
2. Control of LED display to provide "Steady burn" and at least one "flash" mode.
3. Allow for a minimum of two (2) "trigger" speeds to be preset. When the trigger speeds are reached, the display shall automatically switch to a user-set display mode, which may include, flash mode 1, flash mode 2, "Blank-out", and displaying "XX", as well as other display modes.

ITEM 619.96----25 – SPEED DISPLAY TRAILER

2. MATERIALS: (cont'd)

2.04 **Display Operating Software:** (cont'd)

C. **Main Menu:** (cont'd)

4. Display control that allows the sign to be automatically powered up and down based on time and date or a 7-day programmable feature which allows pre-set control of the sign based on a 7 day repeating schedule.
5. A flashing strobe light shall **NOT** be allowed on the system.
6. Radar data logging capabilities must be incorporated into the system which allows, at a minimum, the collection of the following:

- Average Speeds
- Number of readings within specified ranges
- Number of violations
- Highest speeds

2.05 **Case and Housings:**

A. The sign case and all housings on the Speed Display Trailer shall be of all aluminum construction and be fabricated to provided full protection from moisture intrusion to sensitive parts due to rain and snow, including road spray.

B. The lens and/or cover of the LED displays are to be weather proof and provide full protection for the display unit. The lens and/or cover shall be modular and interchangeable. All cases and housings are to be vandal resistant and lockable.

2.06 **Static Speed Limit Sign:** The system shall provide for the display of a Regulatory static speed limit sign above, or adjacent to, the Display Panel. The speed limit sign shall be a minimum of 3 feet in width by 4 feet in height with interchangeable numerals to allow the display of speed limits ranging from forty-five miles per hour (45 MPH) to sixty-five miles per hour (65 MPH) in five miles per hour (5 MPH) increments. The mounting system for the interchangeable numerals shall be provided with vandal resistant connectors. The static speed limit sign shall comply with the provisions of National MUTCD and NYS Supplemental.

2.07 **Sign Support Structure:** The configuration of the sign support structure shall be such that the static sign and the Display Panel will remain in place during all weather conditions that the display trailer is likely to incur, including gusts up to 75 MPH. The static speed limit sign shall be affixed to the support with a positive connection, similar to a permanent roadside installation. The static speed limit sign and Display Panel must be mounted to meet the following minimum heights when the unit is fully deployed:

a. Static Speed Limit above Display Panel:
Speed Limit – 7 feet – 6 inches Display Panel – 4 feet – 7 inches

b. Static Speed Limit Adjacent to Display Panel:
Speed Limit – 5 feet – 6 inches Display Panel – 5 feet – 6 inches

ITEM 619.96----25 – SPEED DISPLAY TRAILER

2. MATERIALS: (cont'd)

2.07 **Sign Support Structure:** (cont'd)

Note: Minimum heights are measured from the ground surface below the sign/panel to the bottom of each when mounted adjacent to the Display Panel; the static sign must be mounted on the left-side, as viewed by oncoming traffic. When the unit is fully deployed, the support structure shall be stabilized and locked into position.

2.08 **Trailer:**

A. The trailer is to be constructed of rectangular structural tubing (ASTM A500-B) or welded steel channel (ASTM A36). The trailer shall be designed for safe transport at normal highway speeds of 55 MPH and shall be equipped for use on public highways in accordance with NYS Vehicle and Traffic Law.

Lights, reflectors, and splash guards shall be provided to comply with NYS regulations. Wiring shall be continuous with no splices, and shall be adequately secured approximately.

Every 18 inches with all connections to be made in a watertight junction box, using watertight light fixtures and watertight connections (Truck-Lite 50800/50400 or equal). Reflectors shall be mechanically fastened (not stick-on).

B. **Stabilizing Outriggers:**

Each corner of the trailer shall be fitted with screw leveling jacks to stabilize the trailer when in the display position.

3. CONSTRUCTION DETAILS:

3.01 The Contractor shall furnish, install, maintain, and relocate speed display trailers at the locations shown and for the usage indicated in the contract documents. When in use, the trailers shall be properly aligned to provide optimum viewing by approaching motorists.

3.02 The Contractor shall be responsible for maintenance, repair and relocation of the trailers until progress of work no longer requires their use, as determined by the Engineer. The trailers may be relocated in contracts with multiple work zones, AOBE. The speed display shall only be displayed when directed by the Engineer. It is anticipated that the speed display will be in operation 35% of the time.

3.03 When not in operation, the speed display trailer shall be removed from the traffic control pattern and replaced with the appropriate static speed limit sign. The speed display trailer shall be stored behind guide rail or a minimum of 9 meters from the edge of pavement.

ITEM 619.96----25 – SPEED DISPLAY TRAILER

4. METHOD OF MEASUREMENT:

4.01 Speed Display Trailers will be measured as the number of units furnished, installed, maintained, relocated, and removed in accordance with the plans, specifications and as directed by the Engineer. Relocations of Speed Display Trailers will not be measured as additional Speed Display Trailers for payment purposes.

5. BASIS OF PAYMENT:

5.01 The unit price shall include the cost of all labor, materials and equipment necessary to complete the work; including furnishing, installing, maintaining, relocating and removing Speed Display Trailers in accordance with the plans, specifications and as directed by the Engineer.

5.02 Seventy-five percent of the unit price shall be paid when each unit has been delivered to the job site and is operational; the balance shall be paid upon completion of the project or when the Engineer authorizes their removal.

ITEM 627.50140008 - CUTTING PAVEMENT

DESCRIPTION:

The contractor shall cut existing asphalt pavement, concrete pavement, asphalt surface course, or asphalt concrete overlay on concrete pavement at the locations indicated and detailed on the plans and as directed by the Engineer.

MATERIALS:

None specified.

CONSTRUCTION DETAILS:

Existing pavement and overlay shall be cut perpendicular to the roadway surface along neat lines, and to the depth indicated on the plans and typical sections, using appropriate equipment. After the pavement has been cut through, the Contractor may use pry bars, pneumatic tools or other methods, to pry loose the pavement to be removed from the pavement that is to remain. A pavement breaker may be used to break up the pavement to be removed after the pavement has been completely cut through and completely free from the pavement to remain.

When pavement cutting is called for in the Contract documents, if a neat vertical face with minimal shatter is obtained by performing an adjacent operation (such as milling) which eliminates the need to perform a separate pavement cutting operation, payment will be made for both the pavement cutting item and the item for the adjacent operation.

Any existing pavements and curbs not indicated to be removed that are damaged by the contractor's operations, shall be repaired at no additional cost to the State. Pavement cutting that the contractor chooses to do for his/her own convenience shall not receive any additional payment from the State.

METHOD OF MEASUREMENT:

The quantity to be measured will be the number of linear feet of pavement cutting satisfactorily completed.

BASIS OF PAYMENT:

The unit price bid per linear foot of pavement cutting shall include the cost of all labor, materials, and equipment necessary to satisfactorily complete the work.

Payment for prying, breaking, removal and disposal of cut pavement shall be made through other appropriate items.

ITEM 637.11----25 – ENGINEER'S FIELD OFFICE – TYPE 1
ITEM 637.12----25 – ENGINEER'S FIELD OFFICE – TYPE 2
ITEM 637.13----25 – ENGINEER'S FIELD OFFICE – TYPE 3
ITEM 637.14----25 – ENGINEER'S FIELD OFFICE – TYPE 4
ITEM 637.15----25 – ENGINEER'S FIELD OFFICE – TYPE 5

1. **DESCRIPTION.** This work shall consist of providing, for the Engineer's use a building, or a portion thereof, or a modular trailer of a specified type erected at a location approved by the Engineer. In addition, all computer hardware, software and internet communications described in this specification shall be provided for the duration of the contract.

2. **MATERIALS:**

2.01 **Engineer's Field Office.** The Engineer's Field Office shall be within a secured, weatherproof building or mobile trailer. If two (2) or more mobile trailer units are provided, they shall be joined with weatherproof connections. Mobile trailers shall be in new or like new condition. The Contractor may furnish equivalent facilities in an existing building, provided that the building is located to provide convenient service. The Contractor shall supply the Engineer with a copy of the Certificate of Occupancy for the existing building.

The Engineer's Field Office shall be in accordance with the requirements of the New York State Uniform Fire Prevention and Building Code, 19 NYCRR, and any applicable local codes.

The electrical system shall be able to continuously operate all equipment and be provided with adequate receptacles. To accommodate computer equipment, the field office shall be provided with a dedicated 20 amp electrical service and a vacant floor-to-ceiling area with a 39 inch by 39 inch footprint along a wall for the installation of a computer hardware rack/cabinet. Electric light shall be provided by non glare-type luminaires to provide a minimum illumination level of 1,000 lux at desk-height level. An ambient air temperature of 70 °F ±10 °F shall be maintained.

Fire extinguishers and smoke and carbon monoxide detectors shall be provided and installed.

The Engineer's Field Office shall be partitioned to provide separate rooms, defined as either "small" or "large", with adjoining doors. Table 637-1 contains the minimum area requirements for each of the office types.

TABLE 637-1 ENGINEER'S FIELD OFFICE AREA REQUIREMENTS

Physical Requirement	Engineer's Field Office Type				
	1	2	3	4	5
Min. total floor area (ft^2)	540	860	1300	2475	2700
Min. number of small rooms	2	3	2	3	6
Min. floor area of each small room (ft^2)	100	100	120	150	175
Min. number of large rooms	1	1	2	2	2
Min. floor area of each large room (ft^2)	200	200	240	300	350

A. **Potable Water.** From a local municipal water supply, certified well or bottled with a heating/refrigerator unit to provide hot and cold water. An exterior frost-free hose bib shall be provided in a location adjacent to the Engineer's Field Office. The hose bib need not be installed on a potable water line, and if the water in the line is not potable, it shall be clearly marked as such.

ITEM 637.11----25 – ENGINEER'S FIELD OFFICE – TYPE 1
ITEM 637.12----25 – ENGINEER'S FIELD OFFICE – TYPE 2
ITEM 637.13----25 – ENGINEER'S FIELD OFFICE – TYPE 3
ITEM 637.14----25 – ENGINEER'S FIELD OFFICE – TYPE 4
ITEM 637.15----25 – ENGINEER'S FIELD OFFICE – TYPE 5

B. **Restroom.** A separately enclosed room, lockable from the inside, that is properly ventilated and in compliance with applicable sanitary codes. The Contractor shall provide all lavatory amenities, necessary paper and soap products, hot and cold running water and a toilet. The toilet shall be flush-type where sanitary facilities are available, and a type approved by the Engineer prior to installation where sanitary facilities are not available. The minimum required number of restrooms to be provided is specified in Table 637-2.

C. **Parking Area.** The Contractor shall provide and/or construct paved or hard surfaced (gravel or bankrun material) secure parking area with dedicated parking spaces adjacent to the Engineer's Field Office. Each parking space shall be 9 feet by 18 feet, and the minimum required number of spaces to be provided is specified in Table 637-2.

D. **Field Office Signs.** The sign panel material shall be aluminum, fiberglass, plywood or lightweight plastic. The sign sheeting shall be ASTM Type III. The sign panel shall be 36 inches high by 48 inches wide with white legend on green background with the phrases as positioned and described below. If erected at a location where the sign might be struck by an errant vehicle, the sign support shall be a breakaway type.

The letters in the phrase "FIELD OFFICE" shall be 6 inch C series with the top of the letters 6 inches below the top of the panel. The letters in the phrase "ENGINEER-IN-CHARGE" shall be 6 inch B series with the top of the letters 18 inches below the top of the panel. The letters in the phrase "N.Y.S. THRUWAY AUTHORITY" shall be 1½ inch E series with the top of the letters 30 inches below the top of the panel. All phrases shall be centered horizontally on the panel.

If the Engineer's Field Office is not located within or adjacent to the contract limits, two (2) additional signs shall be displayed conspicuously within the contract limits. The signs shall be similar to the above description, except that they shall be 48 inches high by 64 inches wide and have an additional bottom line of text containing the street address of the Engineer's Field Office. The letters in the street address shall be 6 inch B series with the top of the letters 36 inches below the top of the panel and centered horizontally on the panel.

E. **Mailbox.** Standard mailbox (with post if necessary) or post office box meeting the requirements of the U.S. Postal Service.

F. **Telephone and Answering System.** A separate telephone and digital answering system for the exclusive use of the inspection staff. The minimum required number of telephone voice lines to be provided is specified in Table 637-2 (these lines are in addition to the separate lines to be provided for the facsimile machine and dial-up computer access if high speed internet access is not available where the field office is located). The telephone and answering system shall provide the ability to answer all voice lines from each voice line, transfer calls to all voice lines and be equipped with a single, dedicated answering system.

A minimum of one (1) telephone shall be cordless and a minimum of one (1) telephone shall be equipped with speaker and conference call capability. The remaining telephones, at least one (1) per required voice line, shall be extension telephones with minimum 25 foot long cords. The digital answering system shall be capable of recording outgoing messages up to 60 seconds long and receiving a minimum of 40 incoming messages of 60 seconds duration. The system must include automated voice marking of time and day of each message received and provide a message mark so

that new messages may be played back without erasing old messages. The system shall include remote programming of playback, backspace, and outgoing message re-record and allow for the retrieval of messages without a remote control unit.

G. **Facsimile Machine.** Plain paper laser or inkjet facsimile machine with a dedicated telephone line. The machine shall be capable of sending and printing a maximum paper size of 8½ x 14 inches, have a minimum 20-page memory storage, a minimum 20-sheet document feeder, a minimum 50-sheet paper capacity, transmit at least 6 pages per minute and have an autodial/redial with a minimum of 50 phone number memory. The machine shall be capable of storing and printing outgoing message confirmation information and printing the sender's name, fax number and page number on incoming faxes.

H. **Photocopier.** Heavy duty, electric, dry-process photocopying machine. The machine shall be an all-in-one copy machine with black & white and color copying, black & white and color printing and black & white and color scanning capabilities. Machine shall have at least three paper bins (8½ x 11 inches, 8½ x 14 inches and 11 x 17 inches), enlarging and reducing capabilities, and collating, sorting stapling and double-sided copying. Set-up, printer drivers, software and networking are required. All on-site staff email addresses shall be set up and programmed for ease of scanning. Maintenance shall be provided, as required, including repairs and all necessary toner cartridges and staples for the life of the contract and until final completion. One (1) case (5,000 sheets, 20 lb, white) of each paper size shall be provided as initial stock.

I. **Paper Shredder.** Automatic start, heavy duty cross-cut paper shredder. The shredder shall be able to receive 8½ inch wide paper and shred a minimum of 15 sheets simultaneously along with CDs and staples.

J. **Pencil Sharpener.** Manual or electric pencil sharpener, minimum 1 per room.

K. **Exterior Bulletin Board.** An installed 4 foot by 8 foot weatherproof bulletin board in front of or adjacent to the Engineer's Field Office. The bulletin board may be attached to an outside wall of the office. The location selected must be handicapped accessible and clearly visible.

L. **Interior Bulletin Board.** An installed, wall-mounted 4 foot by 6 foot bulletin board made of cork or similar material in a large room, and one (1) 2 foot by 4 foot wall mounted bulletin board installed per room.

M. **Dry Erase Board.** Installed, wall-mounted 2 foot by 4 foot dry erase boards, minimum one (1) per room.

N. **Storage Locker.** Metal or wood storage locker with shelves, a tumbler lock and two (2) keys for the storage of survey, GPS and testing equipment. The total locker space footprint provided shall be a minimum of 9 square feet with a minimum height of 6 feet.

O. **Fire Resistant Cabinet.** Fire resistant, legal size filing cabinet with locks and two (2) keys each, meeting the requirements of ANSI/UL Standard 72 for Insulated Filing Devices, Class 350-1 hour. Each office shall be provided with two (2) 2-drawer cabinets, and the required number of additional 4-drawer cabinets as specified in Table 637-2.

ITEM 637.11----25 – ENGINEER'S FIELD OFFICE – TYPE 1
ITEM 637.12----25 – ENGINEER'S FIELD OFFICE – TYPE 2
ITEM 637.13----25 – ENGINEER'S FIELD OFFICE – TYPE 3
ITEM 637.14----25 – ENGINEER'S FIELD OFFICE – TYPE 4
ITEM 637.15----25 – ENGINEER'S FIELD OFFICE – TYPE 5

P. **Bookcase.** Self-standing, 3-shelf metal or wood bookcase, approximately 4 feet high, 4 feet wide and 1 foot deep. The minimum required number of bookcases to be provided is specified in Table 637-2.

Q. **Wastebasket.** Minimum 7 gallon wastebasket, minimum one (1) per desk.

R. **Refrigerator.** Electric, top-freezer type providing a minimum storage space of 15 cubic feet for Engineer's Field Office Types 1 and 2, and a minimum storage space of 21 cubic feet for Types 3, 4 and 5.

S. **Kitchenette.** To include a minimum 1 cubic foot, 1,300 watt microwave oven, a sink with hot and cold running water with minimum dimensions of 15 inch by 15 inch by 6 inch deep, usable counter space with minimum dimensions of 5 feet long by 2 feet deep and cabinet space with minimum dimensions of 5 feet long by 1½ feet deep by 2½ feet high. If the water in the sink is not potable, it shall be clearly marked as such.

T. **Stove.** Electric, propane or bottle gas stove with a minimum of two (2) burners adequate for rapid drying of soil samples, including fuel or electrical supply. A stove is required when a separate Field Laboratory is not included.

U. **First Aid Kit.** A Type III kit in accordance with ANSI Z308.1 *Minimum Requirements for Workplace First Aid Kits*. The minimum number of first aid kits to be provided is specified in Table 637-2.

V. **Thermometer.** A minimum-maximum thermometer displaying in degrees Fahrenheit and mounted with an external probe to give the temperature both indoors and outdoors.

W. **Coat Rack.** A metal or wood coat rack or closet capable of holding at least 4 coats. The minimum required number of coat racks to be provided is specified in Table 637-2. A single coat rack may be provided as long as it holds the minimum number of coats as per Table 637-2.

X. **Office Desk and Chair.** Fully assembled freestanding office desks and chairs. Each desk shall have a 5 foot long by 2½ foot wide work surface and a height of 30 inches, at least 2 lockable drawers and include an adjustable shelf approximately 1 foot wide and no less than 2½ feet long. Each desk shall also be provided with an adjustable chair with arms, 5 legs with casters and be adjustable from approximately 16 inches to 24 inches in height. Each desk shall have a dedicated electrical outlet receptacle. The required number of office desks and chairs to be provided is specified in Table 637-2.

ITEM 637.11----25 – ENGINEER'S FIELD OFFICE – TYPE 1
ITEM 637.12----25 – ENGINEER'S FIELD OFFICE – TYPE 2
ITEM 637.13----25 – ENGINEER'S FIELD OFFICE – TYPE 3
ITEM 637.14----25 – ENGINEER'S FIELD OFFICE – TYPE 4
ITEM 637.15----25 – ENGINEER'S FIELD OFFICE – TYPE 5

TABLE 637-2 ENGINEER'S FIELD OFFICE FURNISHING REQUIREMENTS

Furnishing Description	Required Number per Engineer's Field Office Type				
	1	**2**	**3**	**4**	**5**
Restrooms	1	1	2	2	3
Parking Spaces	6	8	12	18	22
Telephone Voice Lines	2	3	4	4	5
Telephone Line for Computers (when high speed internet is unavailable)	1	1	1	1	1
Telephone Line for Facsimile	1	1	1	1	1
Fire Resistant Cabinets (4-drawer)	2	3	4	6	8
Bookcases	5	7	10	12	16
First Aid Kits	1	1	1	2	2
Coat Racks	1	2	3	4	5
Office Desks and Chairs	4	8	12	18	22
Office/Conference Tables	2	2	3	4	5
Folding Chairs	8	10	10	12	15
Drafting Tables	1	1	2	3	3
Drafting Stools	2	2	4	6	6
Vertical Plan Filing Racks	1	1	2	3	8
Roll File Units	1	1	1	2	4
Flatbed Scanner	1	1	1	1	1
Personal Computer (Hardware and Software)	2	4	6	8	8
LaserJet printer	1	2	3	3	3
Additional Software	1	1	2	2	3
Digital Camera with Motion Picture Functionality	1	1	1	2	2

Y. **Office/Conference Table.** Commercial-grade rectangular table with weather/spill resistant top a minimum of 8 feet long by 2½ feet wide by 30 inches high. The minimum required number of office/conference tables to be provided is specified in Table 637-2.

Z. **Folding Chair.** Commercial-grade, folding steel chair with approximate overall dimensions of 30 inches by 19 inches wide by 21 inches deep. The minimum required number of folding chairs to be provided is specified in Table 637-2.

AA. **Drafting Table.** Adjustable height, tilting top drafting table with brackets and legs and approximate dimensions of 6 feet long by 3 feet wide by 3 feet high. The minimum required number of drafting tables to be provided is specified in Table 637-2.

BB. **Drafting Stools.** Adjustable height stool with backrest. The minimum required number of drafting stools to be provided is specified in Table 637-2.

ITEM 637.11----25 – ENGINEER'S FIELD OFFICE – TYPE 1
ITEM 637.12----25 – ENGINEER'S FIELD OFFICE – TYPE 2
ITEM 637.13----25 – ENGINEER'S FIELD OFFICE – TYPE 3
ITEM 637.14----25 – ENGINEER'S FIELD OFFICE – TYPE 4
ITEM 637.15----25 – ENGINEER'S FIELD OFFICE – TYPE 5

CC. **Vertical Plan Filing Rack.** Constructed of metal, capable of hanging up to 12 sets of plan drawings up to 3 feet by 4 feet in size, 12 hanging clamps included. The minimum required number of vertical plan filing racks to be provided is specified in Table 637-2.

DD. **Roll File Unit.** Twelve (12) compartments, each measuring approximately 6 inches by 6 inches. The minimum required number of roll file units to be provided is specified in Table 637-2.

2.02 **Information Technology.** The minimum required number of personal computers to be provided is specified in Table 637-2. The minimum requirements for each personal computer are:

A. **Hardware**

- CPU to operate Windows 8.1 for Business (32 bit or 64 bit edition) and all other software listed in this specification;
- Optical Drive – CD-RW/DVD-RW;
- 500 GB minimum hard drive;
- 8 GB minimum RAM;
- USB Port(s);
- 24" LCD monitor (1920 x 1080 resolution minimum);
- One (1) 500 GB External Hard Drive;
- Locking cabinet(s) which encloses all computer hardware;
- Surge protection device;
- External 3 button optical scroll mouse;
- External Speakers;
- Modem with separate phone line for computer (if high speed internet service is unavailable), (minimum 56K baud rate).

B. **Software.** Substitutions for the specified software shall not be permitted unless noted otherwise. All manuals shall be provided.

- Windows 8.1 for Business (32 bit or 64 bit edition);
- Microsoft Word (2013 version or later);
- Microsoft Excel (2013 version or later);
- WINZIP 15;
- Norton Internet Security (latest version for Windows 8) set up to run in Auto-Protect Mode and Auto Update Mode (monthly), or McAfee Internet Security Suite (latest version);

  Note: Microsoft Office 2013 Standard Edition, or later version, may be used in lieu of Word 2013 and Excel 2013.

C. **Additional Software.** The following software shall also be provided on the number of personal computers specified in Table 637-2:

- Microsoft Photo Editor (latest version);
- Adobe Acrobat XI Professional (latest version);

ITEM 637.11----25 – ENGINEER'S FIELD OFFICE – TYPE 1
ITEM 637.12----25 – ENGINEER'S FIELD OFFICE – TYPE 2
ITEM 637.13----25 – ENGINEER'S FIELD OFFICE – TYPE 3
ITEM 637.14----25 – ENGINEER'S FIELD OFFICE – TYPE 4
ITEM 637.15----25 – ENGINEER'S FIELD OFFICE – TYPE 5

- Primavera scheduling software capable of meeting all scheduling requirements of the NYS Thruway Authority Addendum to the Standard Specifications §108-01 *Start and Progress of Work* and compatible with the operating system supplied under this specification.

D. Internet Communication.

- **Cable Internet Service.** 10/100 Ethernet cable network card and high-speed cable modem capable of transferring data at a minimum of 50 megabits per second;
- Subscription to an Internet Service Provider capable of providing high-speed Internet service;
- Network/Wireless – Ethernet or wireless card to be compatible with the selected internet and office network connections.

E. LaserJet Printer. Photo-quality color LaserJet printer capable of printing on 8½ by 11 inch and 8½ by 14 inch paper. Supply with spare toner cartridge, standard LaserJet and photo paper, diskettes and read/write CDs.

F. Digital Camera. The digital camera system shall meet the requirements below. All necessary hardware, cables, operating manuals, and other pertinent media required for the operation of the camera unit itself, including connecting the camera to the office computer system shall be provided. The camera must be able to download the images to a computer without any proprietary software having to be installed on a computer.

- Minimum 16.0 megapixel resolution with 20x optical zoom and autofocus operation;
- 3 inch LCD screen and optical viewfinder;
- Built-in intelligent flash (auto/on/off);
- Time/date stamp on each picture;
- A total of two (2) rechargeable sets of batteries (Lithium-Ion) and high-capacity (approximately 1 hour) charging unit;
- Two (2) SDHC highest capacity and speed (Class) memory cards that are compatible with the camera;
- Soft storage/carry case with shoulder strap;
- Motion Video: 640 x 480 resolution capability at 30 frames per second (MPEG Video).

3. CONSTRUCTION DETAILS. The Contractor shall be responsible, until use and occupancy is relinquished by the Authority, for any and all damage, direct or indirect, of whatever nature, occurring to the property of the Authority and property of the inspection staff which is kept in the Engineer's Field Office. The Engineer will provide the Contractor with a detailed list of items kept in the office, with corresponding dollar values, and will provide the Contractor with updates when something on the list changes. Non-Authority-owned property shall only be those items used in the performance of contract-related work activities. Such property shall be replaced within 30 days of the reported damages and would include any loss caused by, but not limited to, fire, theft, vandalism or malicious mischief. The Contractor shall not be responsible for items kept in the Engineer's Field Office that are not on this list.

The Contractor shall install the Engineer's Field Office sign at a location approved by the Engineer. If the Engineer's Field Office is not located within or adjacent to the contract limits, two (2) additional signs shall be displayed conspicuously within the contract limits in locations directed by the Engineer.

ITEM 637.11----25 – ENGINEER'S FIELD OFFICE – TYPE 1
ITEM 637.12----25 – ENGINEER'S FIELD OFFICE – TYPE 2
ITEM 637.13----25 – ENGINEER'S FIELD OFFICE – TYPE 3
ITEM 637.14----25 – ENGINEER'S FIELD OFFICE – TYPE 4
ITEM 637.15----25 – ENGINEER'S FIELD OFFICE – TYPE 5

The Engineer's Field Office shall be fully equipped and made available for use and occupancy by the inspection staff prior to the start of any contract work, and shall be made available after contract final acceptance as directed in writing by the Regional Construction Engineer.

All furniture and equipment shall be fully assembled, operational, clean and serviceable. The Engineer's Field Office shall be cleaned weekly or more often if required, and the timing of the cleaning operations shall be coordinated with the Engineer. The Contractor shall remove and dispose of all rubbish generated in the office and shall keep the office free from pests. The Contractor shall remove snow from all areas subject to vehicular circulation and parking.

After completion, all portable buildings or trailers, fencing, surfacing and utilities shall be removed from the location and the areas cleaned, loamed and restored as required. The Contractor shall be responsible for providing all necessary computer hardware, software and peripheral devices as well as high-speed Internet service to the Engineer's Field Office until use and occupancy of the Engineer's Field Office is relinquished by the Authority. Only internet services that can provide a minimum data transfer rate of 768 kilobits per second will be considered acceptable. The Contractor shall be responsible for providing all necessary service connections to the Engineer's Field Office and Engineer's Field Office computer(s). In addition, the Contractor shall provide a cable or DSL modem and any other equipment necessary to provide the minimum specified data transfer rate.

4. **METHOD OF MEASUREMENT.** The Engineer's Field Office will be measured for payment as the number of months satisfactorily provided, measured to the nearest 0.25 months.

5. **BASIS OF PAYMENT.** The unit price bid per month for the Engineer's Field Office shall include the cost of all labor, materials and equipment necessary to complete the work including property rental, utility charges and incidental expenses. Payment will be made for each month of availability for occupancy by the Engineer and inspection field staff.

   No payment will be made under Engineer's Field Office when deficiencies in compliance with these requirements are not promptly addressed by the Contractor after notification by the Engineer. Should the aggregate of non-compliance days exceed 3 days in any one month, no payment shall be made for the entire month in which deficiencies were cited.

   Monthly payments may be terminated prior to contract final acceptance by written notification by the Division Construction Engineer that such office will no longer be required on the contract. Payment for each month's occupancy of the Engineer's Field Office after the date of contract final acceptance will be made as part of the final contract payment. Failure of the Contractor to supply documentation required to complete the final estimate may result in nonpayment during this delaying period.

   During periods of contract extension of time where Engineering Charges are assessed, no payment will be made for occupancy and services, except that payment for each month's occupancy after the date of final acceptance will be made as part of the final estimate.

ITEM 640.24XX--25 - REFLECTORIZED PAVEMENT MARKING PAINTS, 6 INCH WIDTH

1. DESCRIPTION:

1.01 Under this work the Contractor shall furnish and apply painted reflectorized pavement marking paint in accordance with these specifications, the Contract Documents, the Manual on Uniform Traffic Control Devices (MUTCD), or as ordered by the Engineer.

1.02 The marking material shall be applied by spray methods onto bituminous and Portland cement concrete pavement surfaces at the thickness and width shown on the Contract Documents and/or as indicated by the Pay Item Number.

1.03 The REFLECTORIZED PAVEMENT MARKING, SIX (6) INCH WIDTH Work Item shown in the plans will be the appropriate Item number for stripe color and application at a 15± 1 mil wet thickness.

ALL PROVISIONS OF SECTION 640 - REFLECTORIZED PAVEMENT MARKING PAINTS SHALL APPLY EXCEPT AS MODIFIED BELOW:

4. METHOD OF MEASUREMENT:

4.01 Shall be as in Section 640 except:

Pavement striping will be measured in linear feet along the centerline of the pavement stripe, and will be based on a six (6) inch wide stripe. Measurements for striping with a width greater or lesser than the basic six (6) inches, as shown on the plans or directed by the Engineer, will be made by calculating payment length using the following method:

$$\frac{\text{Plan Width of Striping (inches)} \times \text{Linear Feet Measured}}{\text{6 Inches}}$$

5. BASIS OF PAYMENT:

5.01 Shall be as in Section 640 except:

Payment will be made under:

ITEM NO.	ITEM	PAY UNIT
640.2401----25	White Reflectorized Pavement Marking Paints, 6” x 15 mils	Linear Feet
640.2402----25	Yellow Reflectorized Pavement Marking Paints, 6” x 15 mils	Linear Feet
640.2403----25	White Reflectorized Pavement Letters	Each
640.2404----25	White Reflectorized Pavement Symbols	Each

ITEM 646.0603--25 - INSTALL DELINEATOR OR TENTH MILE MARKER ON POST
ITEM 646.0604--25 - INSTALL DELINEATOR OR TENTH MILE MARKER, BACK-TO-BACK ON POST
ITEM 646.0610--25 - INSTALL DELINEATOR OR TENTH MILE MARKER, BAND OR BRACKET MOUNTED
ITEM 646.0612--25 - INSTALL DELINEATOR OR TENTH MILE MARKER, BACK-TO-BACK, BAND OR BRACKET MOUNTED
ITEM 646.0801--25 - INSTALL SNOWPLOW MARKER, SINGLE UNIT
ITEM 646.0802--25 - INSTALL SNOWPLOW MARKER, DOUBLE UNIT

1. DESCRIPTION:

1.01 The work shall consist of furnishing and installing delineator and/or snowplow marker posts, bands, brackets and all necessary hardware for mounting delineators or snowplow markers as shown on the plans.

2. MATERIALS:

2.01 The posts shall conform to the requirements of Section 646-2 of the Standard Specifications and as shown on the plans.

3. CONSTRUCTION DETAILS:

3.01 The Contractor shall install the delineators or snowplow markers in accordance with Section 646-3 of the Standard Specifications and as shown on the plans.

4. METHOD OF MEASUREMENT:

4.01 The work shall be measured as the number of complete delineators or snowplow markers installed.

5. BASIS OF PAYMENT:

5.01 The unit price bid for each delineator or snowplow marker shall include the cost of all equipment, labor and materials including posts, bands, brackets and hardware necessary to satisfactorily mount and install the delineator or snowplow marker. Also included is the cost to pick up the delineator or snowplow marker panels from the Authority.

ITEM 646.0626--25 - INSTALL MILE MARKERS

1. DESCRIPTION:

1.01 The work shall consist of furnishing and installing mile marker posts and hardware for mounting mile markers as shown on the plans. The mile marker panels will be furnished to the Contractor by the Authority.

2. MATERIALS:

2.01 The posts shall conform to the requirements of Section 646-2 of the Standard Specifications.

3. CONSTRUCTION DETAILS:

3.01 The Contractor shall install the posts in accordance with Section 646-3 of the Standard Specifications at locations shown on the plans and as directed by the Engineer.

4. METHOD OF MEASUREMENT:

4.01 The work shall be measured on an each basis for installation of the markers.

5. BASIS OF PAYMENT:

5.01 The unit bid price for each mile marker installed shall include the cost of all equipment, labor, and materials including posts and mounting hardware necessary to mount the panel and install the marker. Also included is the cost to pick up the marker panels from the Authority.

ITEM 646.10320025 - RESET EXISTING DELINEATORS OR MARKERS

1. DESCRIPTION:

1.01 Under this item the Contractor shall carefully disassemble, remove, store, reset and assemble existing roadway delineators, snowplowing markers, tenth mile markers, and mile markers, as shown on the plans or as specified by the Engineer.

2. MATERIALS:

2.01 None

3. CONSTRUCTION DETAILS:

3.01 **General**. The Contractor shall remove the existing delineators, snowplowing markers, tenth mile markers, and mile markers, and neatly store all component parts in separate piles at secure locations for reuse, resetting or salvage. Removal shall be limited to that area of shoulder excavation on a day to day basis. The work shall be done in a workmanlike manner so as to salvage all usable components of each delineator, snowplowing marker, tenth mile marker, and mile marker. Extra care shall be taken in handling the reflector grommet when disassembling and when resetting each delineator, snowplowing marker, tenth mile marker, and mile marker. The Contractor shall replace at his own expense any delineator, snowplowing marker, tenth mile marker, and mile marker, or its component parts damaged by him in handling. All replacement parts and accessories for unusable delineators, snowplowing markers, tenth mile markers, and mile markers, shall be furnished by the Thruway Authority to the Contractor for resetting. Resetting of delineators, snowplowing markers, tenth mile markers, and mile markers, will immediately follow final grading of the new shoulder on a day to day basis. The posts shall be so erected that the delineators, snowplowing markers, tenth mile markers, and mile markers, will be at the elevations called for on the plans and/or AOBE, be true to line and grade and be truly vertical. The posts may be either driven or set. If driven by either hand or mechanical devices, they shall be plumb above the ground, and firm in the ground, spaced as specified, and driven to the required lines and grades.

After driving, the top of the posts shall have substantially the same cross-sectional dimensions as the body of the posts and no battered heads will be permitted. Any posts bent or otherwise damaged to the extent that they are, in the opinion of the Engineer, unfit for use in the finished work shall be removed from the site and replaced by the Contractor at his own expense. When Posts are driven, a suitable driving cap shall be used.

3.02 **Location**. Locations of existing delineators, snowplowing markers, tenth mile markers, and mile markers shall be maintained when resetting each delineator, snowplowing marker, tenth mile marker, and mile marker. Particular care shall be taken in locating double amber delineators along deceleration and acceleration ramps as shown on the plans or as directed by the Engineer.

4. METHOD OF MEASUREMENT:

4.01 Payment will be made for the number of delineators, snowplowing markers, tenth mile markers, and/or mile markers, removed and reset in accordance with these specifications and the orders of the Engineer.

5. BASIS OF PAYMENT:

5.01 The price bid for each delineator, snowplowing marker tenth mile marker, and mile marker shall include the cost of all labor, materials and equipment necessary to properly complete the work as specified or ordered by the Engineer.

ITEM 646.50----25 REMOVE AND DISPOSE OF DELINEATORS OR MARKERS

1. DESCRIPTION:

1.01 The work shall consist of removal and disposal of all Delineators, full Mile Markers, 1/10 Mile Markers and Snowplow Markers including the posts in a manner satisfactory to the Engineer.

2. MATERIALS:

2.01 Not Specified

3. CONSTRUCTION DETAILS:

3.01 The Contractor shall remove the Delineators and/or Mile Markers with respective posts and dispose of them in a manner satisfactory to the Engineer.

4. METHOD OF MEASUREMENT:

4.01 The removal and disposal shall be measured on an each basis.

5. BASIS OF PAYMENT:

5.01 The unit price bid for removal and disposal of each Delineator and Mile Marker shall include the cost of furnishing all labor and equipment necessary to remove, transport and dispose of the material.

ITEM 654.5110--25 - REUSABLE IMPACT ATTENUATOR, TL 2, ≤ 2 FT OBSTRUCTION WIDTH
ITEM 654.5111--25 - REUSABLE IMPACT ATTENUATOR, TL 2 > 2 FT UP TO 5 FT OBSTRUCTION WIDTH
ITEM 654.5112--25 - REUSABLE IMPACT ATTENUATOR, TL 2, >5 FT OBSTRUCTION WIDTH
ITEM 654.5120--25 - REUSABLE IMPACT ATTENUATOR, TL 3, ≤ 2 FT OBSTRUCTION WIDTH
ITEM 654.5121--25 - REUSABLE IMPACT ATTENUATOR, TL 3, > 2 FT UP TO 5 FT OBSTRUCTION WIDTH
ITEM 654.5122--25 - REUSABLE IMPACT ATTENTUATOR, TL 3 >5 FT OBSTRUCTION WIDTH

All provisions of Section 654 pertaining to Reusable Impact Attenuators shall apply except as follows:

1. Under 654-2 Materials, **DELETE** reference to Subsection 712-08, Reusable Impact Attenuator.

2. Under 654-2 Materials, **INSERT** the following:

   A. Only the following Reusable Impact Attenuators – Test Level 2 have been approved for use on the NYS Thruway.

PRODUCT	MANUFACTURER/SUPPLIER	RESTRICTIONS
SCI – 70GM	SCI Products, Inc. Harrisburg, PA	--

   B. Only the following Reusable Impact Attenuators – Test Level 3 have been approved for use on the NYS Thruway.

PRODUCT	MANUFACTURER/SUPPLIER	RESTRICTIONS
SCI-100GM	SCI Products, Inc. Harrisburg, PA	--

ITEM 670.8888--25 – RELOCATING EXISTING FIBER OPTIC INFRASTRUCTURE

1. DESCRIPTION:

1.01 This work shall consist of relocating an existing fiber optic infrastructure (multi-innerduct and fiber optic line) as shown on the plans or as directed by the Engineer. The work shall also include restoring existing landscape conditions.

1.02 The Contractor shall inform the Utility Owner at least one hundred eighty (180) days in advance of its intent to relocate the existing fiber optic infrastructure and provide one hundred twenty (120) days notice for the abandonment, installation and activation of the proposed fiber optic infrastructure.

1.03 The fiber optic line shall be relocated to the Engineer's satisfaction and approval prior to the start of any other construction work specified in Contract Documents.

1.04 For purposes of this specification, G4S is considered the Utility Owner of the Authority owned fiber optic infrastructure.

2. MATERIALS:

2.01 Materials used in the relocated fiber optic infrastructure shall be equal to those in the existing fiber optic infrastructure. This includes, but is not limited to, conduit, replacement fiber cable, and other materials identified by the Utility Owner. The Contractor shall provide the Utility Owner two (2) copies of the manufacturer's certification for all materials used.

2.02 Suitable backfill, seeding, topsoil, and other landscape appurtenances shall be used to restore the area to its original condition as shown on the plans or as directed by the Engineer.

3. CONSTRUCTION DETAILS:

3.01 The Contractor shall coordinate all work with the Engineer/Thruway Headquarters Fiber Coordinators. The Engineer/Thruway Headquarters Fiber Coordinators shall approve all equipment to be used for relocating the fiber optic infrastructure.

3.02 The Contractor shall dig test pits by hand to determine the exact location of the existing fiber optic infrastructure. Extreme care shall be taken to prevent damage to the facility. Prior to locating any existing line, the Contractor shall contact the Engineer/Thruway Headquarters Fiber Coordinators in accordance with NYS Standard Specifications and pursuant to 16 NYCRR 753, Protection of Underground Facilities.

3.03 The Contractor shall get the approval of the Engineer/Thruway Headquarters Fiber Coordinators for the final proposed location of the fiber optic infrastructure.

3.04 The Contractor shall protect the fiber optic infrastructure and ensure there are no interruptions of service during relocation operations. The Contractor shall have full financial responsibility for any shutdowns or interruptions in service caused by its relocation operations and there shall be no additional cost to the Authority.

3.05 The fiber optic infrastructure shall be moved with care and diligence (by hand) to ensure that the fibers are not over-stretched or have reduced signal capacity. In addition, no splicing or other disconnecting of individual fiber cables options shall be allowed without written approval of the Engineer/Thruway Headquarters Fiber Coordinators.

3.06 Unless specified otherwise, the minimum depth of the fiber optic line shall be 42 inches from the top of proposed finish grade and in accordance with the Contract Documents.

3.07 **Repairs:** If damage to the fiber optic infrastructure is caused by relocation operations, the Contractor shall repair the damage in a manner satisfactory to the Utility Owner. Repairs shall be done at the Contractor's expense and there shall be no additional cost to the Authority. Repairs shall be made in a timely manner, as directed by the Engineer/Thruway Headquarters Fiber Coordinators.

If the Utility Owner elects to repair the damage, the cost shall be borne by the Contractor.

3.08 **Disruptions:** If the fiber optic facility is disrupted for any reason during the work, the Contractor shall notify the Utility Owner and the Engineer immediately. In addition, the Contractor shall provide staff and support to repair the work immediately under the direction of the Utility Owner, as approved by the Engineer. This work shall be performed at the Contractor's expense and at no cost to the Authority.

4. METHOD OF MEASUREMENT:

4.01 The work will be measured as the number of linear feet of fiber optic infrastructure relocated to the new proposed location. A fiber optic infrastructure is defined as a duct bank located in a trench, regardless of the amount of conduits in the duct bank. Measurement will be made along the centerline of the proposed alignment of the fiber optic infrastructure.

5. BASIS OF PAYMENT:

5.01 The unit price bid per linear foot shall include the cost of all labor, materials, excavation, backfill, test pits, temporary shoring and equipment necessary to complete the work as prescribed in this specification to the satisfaction of the Engineer.

ITEM 685.XX06--25 - EPOXY REFLECTORIZED PAVEMENT STRIPES, 6 INCH WIDTH

1. DESCRIPTION:

1.01 Under this work the Contractor shall furnish and apply epoxy reflectorized pavement markings in accordance with these specifications, the Contract Documents, the Manual on Uniform Traffic Control Devices (MUTCD) with the NYS Supplement, or as ordered by the Engineer. Unless otherwise indicated, payment will be for increments of 6 inches of strip width.

1.02 The epoxy marking material shall be hot applied by spray methods onto bituminous and Portland cement concrete pavement surfaces at the thickness and width shown on the Contract Documents and/or as indicated by the Pay Item Number. Following an application of glass beads, the cured epoxy marking shall be an adherent reflectorized stripe.

1.03 The EPOXY REFLECTORIZED PAVEMENT STRIPE, 6 INCH WIDTH Work Item shown in the plans will be the appropriate Item number for stripe color and application at a 15± 1 mil wet thickness on concrete and aged asphalt, or at a 20± 1 mil wet thickness on new asphalt cement.

ALL PROVISIONS OF SECTION 685 - EPOXY REFLECTORIZED PAVEMENT MARKINGS SHALL APPLY EXCEPT AS MODIFIED BY ADDENDA AND BELOW:

4. METHOD OF MEASUREMENT:

4.01 Shall be as in Section 685 except:

Pavement striping will be measured in linear feet along the centerline of the pavement stripe, and will be based on a 6 inch wide stripe. Measurement for striping with a width greater or lesser than the basic 6 inches, as shown on the plans or directed by the Engineer, will be made by calculating payment length using the following method:

$$\frac{\text{Plan Width of Striping (inches) X Linear Feet Measured}}{\text{6 inches}}$$

5. BASIS OF PAYMENT:

5.01 Shall be as in Section 685 except:

Payment will be made under:

ITEM NO.	ITEM	PAY UNIT
685.0106----25	White Epoxy Reflectorized Pavement Stripes, 6" x 15Mils	LF
685.0206----25	Yellow Epoxy Reflectorized Pavement Stripes, 6" x 15Mils	LF
685.1106----25	White Epoxy Reflectorized Pavement Stripes, 6" x 20Mils	LF
685.1206----25	Yellow Epoxy Reflectorized Pavement Stripes, 6" x 20Mils	LF
685.1306----25	White Epoxy Reflectorized Pavement Letters	EA
685.1406----25	White Epoxy Reflectorized Pavement Symbols	EA

ITEM 687.0198--25 – WHITE PREFORMED THERMOPLASTIC FOR CROSS WALK STRIPES, 12 INCH WIDTH, LF

1. DESCRIPTION:

1.01 Under this work, the Contractor shall clean the existing pavement including the removal of existing pavement stripes and curing compound, and furnish and apply preformed reflectorized pavement markings at the location and in accordance with the patterns indicated on the plans, or as directed by the Engineer, and in accordance with this specification.

1.02 The preformed reflectorized pavement marking shall be applied on new and existing bituminous and Portland cement concrete pavement surfaces by hand and mechanical methods. The resultant marking shall be an adherent reflectorized stripe that is capable of molding itself to the contours of the pavement surface and of resisting deformation by traffic.

2. MATERIALS:

2.01 **General Requirement:** The markings must be a resilient white thermoplastic product with uniformly distributed glass beads throughout the entire cross sectional area. The markings must be resistant to the detrimental effects of motor fuels, lubricants, hydraulic fluids, etc. Lines, legends, and symbols are capable of being affixed to bituminous and/or Portland cement concrete pavements by the use of the normal heat of a propane torch. Other colors shall be available as required.

The markings must be capable of conforming to pavement contours, breaks and faults through the action of traffic at normal pavement temperatures. The markings shall have resealing characteristics, such that it is capable of fusing with itself and previously applied thermoplastic when heated with the torch.

The markings must be able to be applied in temperatures down to 32°F without any special storage, preheating or treatment of the material before application.

2.02 **Manufacturing Control and ISO Certification:** The manufacturer must be ISO certified and provide proof of current certification. The scope of the certification shall include manufacture of reflective highway markings.

2.03 **Physical Properties:** Must be composed of an ester modified rosin resistant to degradation by motor fuels, lubricants, etc., in conjunction with aggregates, pigments, binders and glass beads which have been factory produced as a finished product, and meets the requirements of the current edition of the National Manual on Uniform Traffic Control Devices and NYS Supplement. The thermoplastic material conforms to AASHTO designation M249-79 (98), with the exception of the relevant differences due to the material being supplied in a preformed state.

2.04 **Graded Glass Beads:**

A. The material must contain a minimum of thirty percent (30%) intermixed graded glass beads by weight. The intermixed beads shall be clear and transparent. Not more than twenty percent (20%) consists of irregular fused spheroids, or silica. The index of refraction shall not be less than 1.50.

B. The material must have factory applied coated surface beads and abrasives in addition to the intermixed beads at a rate of 1/2 lb. (±20%) per 11 square feet. The surface beads and abrasives must be applied so that every other shaped portion contains glass beads or abrasives with a minimum hardness of 7 (Mohs scale). These factory applied coated surface beads shall have the following specifications:

ITEM 687.0198--25 – WHITE PREFORMED THERMOPLASTIC FOR CROSS WALK STRIPES, 12 INCH WIDTH, LF

2. MATERIALS: (cont'd)

2.04 **Graded Glass Beads:** (cont'd)

1) Minimum 80% rounds
2) Minimum refractive index of 1.5
3) Minimum SiO_2 Content of 70%
4) Maximum Iron Content of 0.1%

Size Gradation	% Retained
1400Φm (14 U.S. mesh)	0 – 3%
1180 Φm (16 U.S. mesh)	2 – 10%
1000 Φm (18 U.S. mesh)	10 – 30%
850 Φm (20 U.S. mesh)	30 – 60%
600 Φm (30 U.S. mesh)	50 – 80%
500 Φm (35 U.S. mesh)	60 – 85%
355 Φm (45 U.S. mesh)	95 – 100%
250 Φm (60 U.S. mesh)	98 – 100%

2.05 **Pigments:**

A. **White:** Sufficient titanium dioxide pigment is used to ensure a color similar to Federal Highway White, Color No. 17886, as per Federal Standard 595.

2.06 **Heating Indicators:** The top surface of the material (same side as the factory applied surface beads) shall have regularly spaced indents. These indents shall act as an indicator system for the operator to properly gauge the correct amount of heat to apply during installation. The indents shall work by closing together to show that the material has reached a molten state.

2.07 **Skid Resistance:** The surface, with properly applied and embedded surface beads, must provide a minimum resistance value of 60 BPN when tested according to ASTM E303.

2.08 **Thickness:** The material must be supplied at a minimum thickness of 125 mils.

2.09 **Versatility:** As an option, turn arrows and combination arrows may come without surface applied glass beads, thus facilitating the use of those arrows as either left or right indicators, thereby reducing inventory requirements.

2.10 **Environmental Resistance:** The material must be resistant to deterioration due to exposure to sunlight, water, salt or adverse weather conditions and impervious to oil and gasoline.

2.11 **Retroreflectivity:** The material, when applied in accordance with manufacturer's guidelines, must demonstrate a uniform level of sufficient nighttime retroreflection when tested in accordance to ASTM E1710-97. The applied material must have an initial minimum intensity reading of 275 mcd m^{-2}-lx^{-1} for white as measured with an LTL-2000 or LTL-X Retroreflectometer.

2.12 **Packaging:** The preformed thermoplastic markings shall be placed in protective plastic film with cardboard stiffeners where necessary to prevent damage in transit. Linear material must be cut to a maximum of 3 feet long pieces. Legends and symbols must also be supplied in flat pieces. The cartons in which packed shall be non-returnable and shall not exceed 40 inches in length and 25 inches in width, and be labeled for ease of identification. The weight of the individual carton must not exceed 70 lbs. A protective film around the box must be applied in order to protect the material from rain or premature aging.

ITEM 687.0198--25 – WHITE PREFORMED THERMOPLASTIC FOR CROSS WALK STRIPES, 12 INCH WIDTH, LF

2. MATERIALS: (cont'd)

2.13 **Sealer:** The sealer must be a two (2) component polyurea sealer used to enhance the bond strength between the substrate and preformed thermoplastic materials made from resins and/or polymers, and inorganic fillers as recommended by the thermoplastic manufacturer.

3. CONSTRUCTION DETAILS:

3.01 **Application:**

A. **Asphalt:** The materials shall be applied using the propane torch method recommended by the manufacturer. The material must be able to be applied at ambient and road temperatures down to 32°F without any preheating of the pavement to a specific temperature. The material must be able to be applied without the need to heat the material to a specific temperature. The pavement shall be clean, dry and free of debris. Supplier must enclose application instructions with each box/package.

B. **Portland Concrete:** The same application procedure shall be used as described under Section 4.1. However, a compatible primer sealer must be applied before application to assure proper adhesion.

3.02 **General:** All pavement markings and patterns shall be placed as shown on the plans and in accordance with the National Manual on Uniform Traffic Control Devices with the NYS Supplemental.

3.03 The Contractor shall be responsible for removing, to the satisfaction of the Engineer, preformed markings applied in unauthorized areas.

3.04 **Application Methods:** Preformed pavement markings shall be applied by the following methods. The installation of markings on the project may be performed simultaneously by more than one method.

3.05 **Mechanical Applicating Equipment:** Mechanical applicating equipment for the placement of preformed pavement marking stripes shall be of the type recommended by the manufacturer of the preformed material. All applicating equipment shall be approved by the Engineer prior to the start of work.

3.06 **Sealer Requirements:** Two (2) component sealer shall be used for marking applications in accordance with the written recommendations of the manufacturer of the preformed marking material.

Sealer materials shall be placed at the application rate and by the application methods recommended by the manufacturer.

When sealer is applied, the area of application shall be at least the width or dimension, of the new preformed marking, plus 1 inch on each side.

3.07 **Surface Cleaning and Preparation of Pavement Surfaces:** The Contractor shall be responsible for cleaning the pavement surface to the satisfaction of the Engineer.

Surface cleaning and preparation work shall be performed only in the area of the preformed markings application.

ITEM 687.0198--25 – WHITE PREFORMED THERMOPLASTIC FOR CROSS WALK STRIPES, 12 INCH WIDTH, LF

3. CONSTRUCTION DETAILS: (cont'd)

3.07 **Surface Cleaning and Preparation of Pavement Surfaces:** (cont'd)

At the time of application, all pavement surfaces shall be free of oil, dirt, dust, grease and similar foreign materials. The cost of cleaning these contaminants shall be included in the bid price of this item.

In addition, concrete curing compounds on new Portland cement concrete surfaces and existing pavement markings on both concrete and bituminous pavement surfaces shall be removed.

4. METHOD OF MEASUREMENT:

4.01 Pavement striping will be measured by linear foot along the centerline of the pavement stripes and will be based on a 12 inches wide stripe.

4.02 The preformed pavement markings will be inspected during and following installation to determine conformance with this specification. In addition, they will be inspected following a performance period that will extend for 90 calendar days following both their installation and opening of the roadway to traffic.

4.03 Within 15 consecutive calendar days after the end of the 90 day performance period, a final performance inspection will be made by the Engineer. If this inspection discloses any work, in whole or in part, as not being visibly intact and serviceable to the following extent, the Contractor shall completely repair or replace such work:

A. **Broken Line:** 90 percent measured longitudinally of the total length of all broken lines in any 500 feet long pavement section.

B. **Dotted Line:** 50 percent measured longitudinally of the total length of all dotted lines in any 100 feet long pavement section.

C. **Solid Line and Edge Line:** 90 percent measured longitudinally of the total length of solid line or edge line in any 500 feet long pavement section.

D. **Channelizing Line, Stop Line, Crosswalk Lines, Clearance Line and Crossbars, Hatch Lines, Letters and Symbols:** 90 percent by area of any individual line, letter, or symbol.

4.04 When required all repair or replacement work shall be performed in accordance with this specification and completed within 60 calendar days of the earliest allowable installation date as specified for that location.

4.05 Upon completion of the final performance inspection, or after satisfactory completion of any necessary corrections, the Engineer will, within 10 calendar days, notify the Contractor in writing, of the date of such final performance inspection and release him from further performance responsibility.

ITEM 687.0198--25 – WHITE PREFORMED THERMOPLASTIC FOR CROSS WALK STRIPES, 12 INCH WIDTH, LF

4. METHOD OF MEASUREMENT: (cont'd)

4.06 This delay in performance inspection and performance acceptance of preformed markings shall not delay acceptance of the entire project and final payment due if the Contractor provides the Authority with a "Faithful Performance Bond", and a "Labor and Material Bond" in the full amount of all preformed pavement marking items. These bonds shall conform to the requirements of §103-03 and shall be in full force and effect until final performance inspection and performance acceptance of the pavement markings. In addition, the Contractor shall keep in force the various types of insurance as required by §107-06.

4.07 Pavement striping on on-going projects will be measured as the total of the striping applied, if after the final 90 day performance period, damage to the striping is not in excess of that specified (e.g., If 95% of the edgeline striping is intact in a 500 foot pavement section, the edgeline will be measured as the full 500 ft. of applied marking. No deduction will be made for the damaged 5% (25 feet of striping.)

4.08 Measurement for striping with a plan width greater or less than the basic 12 inches as shown on the plans or as directed by the Engineer, will be made by the following method:

$$\frac{\text{Plan Width of Striping (inches) X (feet)}}{\text{12 inches}}$$

5. BASIS OF PAYMENT:

5.01 The accepted quantities of markings will be paid for at the contract unit price, which shall include the cost of furnishing all labor, materials and equipment to satisfactorily complete the work. The cost of cleaning pavement surfaces of oil, dirt, dust, grease, and similar foreign materials shall be included in the price bid. The cost of removal of concrete curing compounds and existing pavement markings will also be included in the price bid. The cost of removal of concrete curing compounds and existing pavement markings will also be included in the price bid.

ITEM 688.0401--25 - PREFORMED REFLECTORIZED HANDICAP PARKING PAVEMENT SYMBOLS

All provisions of Item 688.04 shall remain in effect except as modified below:

The Preformed Reflectorized Handicap Parking Pavement Symbol shall consist of a white, reflective disabled symbol inlaid into a blue, non-reflective background mat with pigments selected and blended to conform to standard highway colors through the expected life of the marking.

ITEM 697.0203--25 - FIELD CHANGE ORDER (THRUWAY)

1. DESCRIPTION:

1.01 **General:** The Field Change Order (FCO) provides a contract contingency allowance for the timely payment of authorized additional work that is necessary to fulfill the intent of the plans and specifications.

1.02 **Eligible Work:** FCO payments shall be limited to work that is: (1) within the scope of the contract; (2) a quantity variation of existing contract pay items, or; (3) a new contract pay item introduced as a result of minor field adjustments in the details of the project. All eligible items of work shall have a known unit price, either through use of a contract bid price or through an Agreed Price.

2. MATERIALS:

2.01 None specified.

3. CONSTRUCTION DETAILS:

3.01 None specified.

4. METHOD OF MEASUREMENT:

4.01 This item will be measured for payment on a dollars-cents pay unit basis.

4.02 **Bid Price:** The unit price shown in the proposal for this item will be considered as the price bid, and shall not be altered in any manner. Should the amount shown be altered, the new figure will be disregarded and the original bid price will be used to determine the total amount bid for the contract.

4.03 **Payments:** Work for which FCO payments are processed will be measured in accordance with the specifications governing the work.

5. BASIS OF PAYMENT:

5.01 All work to be paid under the FCO item must be authorized in conformance with §104-02 – *Changes, Contingencies, Extra Work and Deductions*. Disputed work, force account work, work associated with §104-10 – *Value Engineering Change Proposals*, or payments for time related provisions are not eligible for FCO payment.

5.02 FCO payments will be determined from the quantities and unit prices of eligible work that has been completed in conformance with applicable Specifications. Work for which FCO payments are processed will be paid in accordance with the specifications governing the work.

5.03 Prior to processing the final agreement, the FCO payments will be reconciled through a final Order-on-Contract, such that the amount of FCO payments are converted to the corresponding quantities of the pertinent contract pay items. When payments are transferred to the appropriate items, the remaining amount of FCO funds will be deleted.

ITEM 699.04----25 - MOBILIZATION

1. DESCRIPTION:

1.01 Under this item the work the Contractor shall be generally compensated for expenses which are incurred before significant contract work occurs. The three (3) milestones identified by the NYSTA for successful Contractor completion of mobilization to begin this public works contract are:

a. **Start of Work:**

Provide the necessary bonds, insurance, and prefinancing.

Set up the necessary general plant, including shops, storage areas, offices for itself and the Owner's Engineer and such sanitary and other facilities as are required by local or state law or regulation, and staff the project with equipment.

b. **Schedule of Operations:**

Submit, and if necessary, revise and resubmit, a complete "Critical Path format Schedule of Operations" as described in §108-01, of the TA Addendum.

c. **Minority and Women's Business Enterprise Participation Program:**

Provide a M/WBE participation program meeting the M/WBE goals of the Contract as described in **§109-06 CONTRACT PAYMENTS** and in accordance with **§102-12 D/M/WBE UTILIZATION**.

2. MATERIALS:

2.01 Unless otherwise specified, materials required for mobilization, but not installed as part of the completed contract, shall be as determined by the Contractor, except they shall conform to any pertinent local, State or Federal laws, regulations or codes.

3. CONSTRUCTION DETAILS:

3.01 The work required to provide the above facilities, services, and equipment for mobilization shall be done in a safe and workmanlike manner and shall conform with any pertinent local, State or Federal Law, regulation or code. Good housekeeping consistent with safety and other requirements of this contract shall be maintained.

4. METHOD OF MEASUREMENT:

4.01 Payment for mobilization will be made on a lump sum basis in the next estimate after the acceptable completion of all three (3) mobilization milestones, as documented by the Engineer:

a. Milestone 1 is submission of required bonds, insurance, and refinancing.
b. Milestone 2 is acceptance of a CPM Schedule of Operations for the project in accordance with §108-01 of the TA Addendum.

ITEM 699.04----25 - MOBILIZATION

4. METHOD OF MEASUREMENT: (cont'd)

4.01 (cont'd)

c. Milestone 3 is acceptance of the Contractor's program to comply with the M/WBE goals of the Contract in accordance with **§102-12 D/M/WBE UTILIZATION**.

5. BASIS OF PAYMENT:

5.01 The amount bid for mobilization shall not exceed four percent (4%) of the total contract bid price, excluding the bid price for mobilization.

The amount bid shall constitute only general compensation for the furnishing and maintenance of the services and facilities delineated in Section 1. Description, to the extent and at the time the Contractor deems them necessary for his operations, consistent with the requirements of this work and the contract.

The amount bid shall be payable to the Contractor with the first progress estimate made for other contract work following acceptable completion of all three (3) milestones defining completion of the work of this Item. The first progress estimate shall be made after the value of contract work, excluding the value of this item, meets the requirements set forth in **§109-06 – Contract Payments**.

Payment will be made under:

ITEM NO.	DESCRIPTION	PAY UNIT
699.04 25	Mobilization	Lump Sum

SPECIAL NOTES

CONFIDENTIAL INFORMATION

1. **Confidential Information:** "Confidential Information" means any information not generally known to the public, whether oral or written, that the Authority claims is confidential and discloses to Contractor for the purposes of performing work on the Project. Confidential Information may include, but is not limited to, operational and infrastructure information relating to: bid documents, plans, drawings, specifications, reports, product information and data, business and security processes and procedures; personnel and organizational data, and financial statements; information system IP addresses, passwords, security controls, architectures and designs; and such other data, information and images that the authority deems confidential. The Authority will identify written Confidential Information by marking it with the word "Confidential" and will identify oral Confidential Information as confidential at the time of disclosure to the Contractor.

2. **Exempt Materials:** Confidential Information does not include information which, at the time of the Authority disclosure to Contractor; (a) is already in the public domain or becomes publicly known through no act of Contractor; (b) is already known by Contractor free of any confidentiality obligations; (c) is information that the Authority has approved in writing for disclosure; or (d) is required to be disclosed by Contractor pursuant to law so long as Contractor provides the Authority with notice of such disclosure requirement and an opportunity to defend prior to any such disclosure.

3. **Permitted Use:** Contractor may use Confidential Information solely for the purposes of performing work on the Project. Contractor may share Confidential Information with its employees, consultants, sub-consultants, sub-contractors, suppliers, and agents that are necessary to perform work on the Project ("Authorized Personnel"), but must ensure that such Authorized Personnel execute a Confidentiality and Non-Disclosure Agreement as set forth in the Minimum requirements for the Handling and Treatment of confidential Information. The Authority's disclosure of Confidential Information to Contractor shall not convey to Contractor any right to or interest in such Confidential Information and the Authority shall retain all right and title to such Confidential Information at all times.

4. **Protections:** Contractor shall hold Confidential Information confidential to the maximum extent permitted by law. Contractor shall safeguard Confidential Information in accordance with the Minimum Requirements for the Handling and Treatment of Confidential Information.

5. **Return of Confidential Information:** Upon the written request of the Authority, Contractor shall return all written Confidential Information to the Authority.

EXTERNAL CONNECTIONS

If in order to perform work on the Project, Contractor must make an external connection to the Authority's data communications infrastructure and/or access Authority information systems, Contractor shall in all respects comply with all Authority policies and procedures regarding such connections and information systems access and undertake whatever actions are necessary in the discretion of the Authority to ensure such compliance. Contractor shall be responsible for all costs associated with ensuring that its own network security measures comply with all Authority policies and procedures regarding external connections.

MINIMUM REQUIREMENTS FOR THE HANDLING AND TREATMENT OF CONFIDENTIAL INFORMATION

Contractor shall meet the following minimum requirements relative to project information that is identified as **CONFIDENTIAL.**

Authorized Personnel:

Contractor shall require that all authorized individuals or entities (e.g., employees, consultants, sub-consultants, sub-contractors, suppliers and agents) ("Authorized Personnel") to which it discloses **CONFIDENTIAL** information sign a Confidentiality and Nondisclosure Agreement ("Agreement"). Such Agreement shall provide that Authorized Personnel: are personally responsible at all times for protecting **CONFIDENTIAL** information that is in their possession or control; must always use proper precautions to safeguard against the unauthorized access and disclosure of **CONFIDENTIAL** information; must notify Contractor of any known or suspected instances of loss or theft of, or unauthorized access to, **CONFIDENTIAL** information; and must return all **CONFIDENTIAL** information to Contractor upon completion of the project. Contractor shall be responsible for enforcing the provisions of such Agreement through personal observation and supervision of Authorized Personnel and utilization of appropriate processes.

Contractor shall maintain a list of all Authorized Personnel which have access to **CONFIDENTIAL** information and must provide the Authority with such list upon the Authority's request. Contractor shall update such list monthly and notify the Authority of any changes in such list.

Inventory Control:

Contractor shall create and maintain an inventory of all **CONFIDENTIAL** information that it provides to Authorized Personnel. Upon completion of the project, Contractor shall check all **CONFIDENTIAL** information returned from Authorized Personnel against the inventory. Contractor shall provide a copy of the checked inventory to the Authority.

Use and Storage:

Contractor shall implement reasonable processes during normal working hours to prohibit unauthorized individuals from gaining access to **CONFIDENTIAL** information that is within the Contractor's custody and control. At times other than normal working hours, Contractor shall store **CONFIDENTIAL** information in a secure area, such as a fire-proof safe, locked desk, cabinet or other secure storage facility, where access can be controlled. Contractor shall control the access that Authorized Personnel have to **CONFIDENTIAL** information stored in such secure areas through the use of manual or automated locks and keys. Contractor shall maintain a list of Authorized Personnel who have access to such secure areas and the specific **CONFIDENTIAL** information therein.

Reproduction:

Contractor may reproduce **CONFIDENTIAL** information only to the extent necessary to carry out contract performance. Contractor must stamp/mark all **CONFIDENTIAL** information that is reproduced with the word **CONFIDENTIAL** and protect it in the same manner as the original.

Transportation:

To the extent feasible and reasonable, Contractor shall hand deliver **CONFIDENTIAL** information with instructions that only the addressee is allowed to open or view it. Contractor may send **CONFIDENTIAL** information that cannot be hand delivered via the U.S. Postal Service or express mail services (e.g., FEDEX) provided: it is packaged and sealed in a way that does not disclose its contents or the fact that it is **CONFIDENTIAL** information, and a signature from the recipient is required.

Under no circumstances shall a transportation method be used that cannot guarantee that **CONFIDENTIAL** information is accessed only by the intended recipient.

Disposal:

Contractor shall dispose of all **CONFIDENTIAL** information, regardless of its form or format, using a destruction method that prevents its unauthorized retrieval (e.g., crosscut or micro shredding, degaussing).

Loss, Theft or Unauthorized Access:

Contractor shall provide timely notice to the Authority upon discovery of any incident involving the loss or theft of, or unauthorized access to, **CONFIDENTIAL** information.

SPECIAL NOTE:
CONTROL OF MATERIALS

The Contractor's attention is directed to the TA Addendum, Section 106 – CONTROL OF MATERIAL, located elsewhere in this Proposal. The Contractor understands and agrees that some or all of the off-site inspection and approval of material such as precast concrete items, structural steel, bridge bearings, concrete structural elements and/or their components to be used on this project will be done by the New York State Department of Transportation (NYSDOT) as the Authority's agent.

The Contractor agrees to the following conditions:

1. Whenever the Contractor receives direction from the NYSDOT regarding the approval/rejection of material that direction constitutes direction by the Authority under the contract, and shall be final and accepted as such by the Contractor.

2. The Contractor will not allow off-site materials subject to inspection and approval of NYSDOT to be shipped to the project site without direct authorization from the NYSDOT.

3. At the Pre-Award Meeting or as soon as practicable, but in any case before the Pre-Construction Conference, the Contractor will provide the following information to the Thruway Authority's Director, Office of Construction Management, for transmittal to NYSDOT to arrange off-site inspections:

   A. The name and address of each Manufacturer of all materials, and portions thereof, requiring off-site quality assurance to be incorporated into this highway project.

   B. The name and address of each Fabricator fabricating each steel item or any portion thereof to be incorporated into this highway project.

   C. The name and address of each Fabricator manufacturing structural pre-cast/pre-stressed items or any portion thereof to be incorporated into this highway project.

4. The Contractor agrees that it and its Subcontractors and Suppliers will acquire all materials to be incorporated into this Thruway/Canal project **only** through Manufacturing, Batching and Fabrication facilities approved by NYSDOT.

AVAILABILITY OF ELECTRONIC BID DATA

1. SUMMARY:

The New York State Thruway Authority (NYSTA) uses Trns•port Expedite Software for electronic bidding. Expedite is a product of the American Association of State Highway and Transportation Officials (AASHTO) that is currently used by the majority of State Departments of Transportation. It is provided free of charge, and can be used on almost any Windows-compatible PC. It integrates with many existing electronic bid preparation software, and has import/export capability for use with database and spreadsheet systems. Expedite allows bidders to receive electronic proposal bid item information from the New York State Thruway Authority (NYSTA) internet web site and to produce both an electronic and a paper-based bid.

For additional information and downloads, see the NYSTA website at http://www.nysthruway.gov.

2. PARTICIPATION AND RELATIONSHIP TO PAPER DOCUMENTS:

Electronic bidding neither replaces paper bids nor forces any Contractor to bid electronically. Rather, participation is voluntary and electronic bidders must submit matching paper documents to backup the electronic file. Expedite writes a matching date-time group in both the computer file and on every printed bid page as per NYSTA specifications. This date-time helps verify that the electronic and printed files are consistent. In case of discrepancy, paper bids always prevail and are the primary legal document.

3. THIRD-PARTY SOFTWARE:

The NYSTA endorses no particular product but expects all such vendors and individuals to voluntarily keep pace with changes in NYSTA specifications.

4. PROPOSAL NOTES AND CHANGES BY AMENDMENT:

Contractors are solely responsible for recognizing and properly responding to any and all special notes and circumstances printed in the Contract Proposal and any and all changes by amendment from the amendment documents and/or notices communicated to them by the NYSTA Contracts Unit. Amendments are posted online at: http://www.thruway.ny.gov/business/contractors. If an amendment involves changes to item bid date, an amended Expedite file will be posted to the NYSTA website, and this file must be applied to your electronic bid. However, not all amendments will involve changes to item bid data. Do not bid without carefully reviewing the printed proposal and any and all changes by amendment. Proposal notes and circumstances include, but are not limited to, printed information on alternate, fixed and/or limited cost items and/or special circumstances regarding item placement and use.

SPECIAL NOTE:

REQUIREMENTS FOR CONTRACTOR'S UTILIZATION OF AREAS OUTSIDE OF THE RIGHT-OF-WAY

1. Before the contractor can utilize any area outside of the NYS Thruway Authority or NYS Canal Corporation (NYSTA/CC) Right of Way (or outside of a temporary easement obtained for the project by the NYSTA/CC), for any work associated with this project, written approval to do so shall be obtained from the NYS Thruway Authority through the Project Engineer. The contractor's request for approval shall be in writing and the Authority shall be allowed 2 weeks to review the request and respond.

2. This requirement applies to areas such as, but not limited to: borrow areas, spoil areas, equipment and/or material storage areas, haul roads, batching areas, water points, shop areas, and all similar areas. This requirement does not apply to the Contractor's established and permanent headquarters, commercial borrow sources, commercial gravel pits, commercial quarries, and all similar areas.

3. The contractor's written request for approval shall include a letter report prepared by an Environmental Professional, acceptable to the Authority, documenting the investigation of the proposed site. The expectation is that an Environmental Professional visits the site, performs an assessment of the proposed use against all applicable environmental requirements, and then documents their findings and recommendations. The letter report shall include the following unless otherwise authorized by the Authority:

   a) A written description of the activities the contractor wishes to perform at the proposed site, including timeframes.

   b) Maps showing Federal and State regulated wetlands. The area proposed for use shall be depicted on each map.

   c) A site location map which accurately shows the area proposed for use, adjacent property boundaries/owners, the location of all wetland boundaries observed, and any required erosion and sediment control measures. If present, wetlands shall be delineated in the field by the Environmental Professional with stakes and ribbon, and wetland delineation data forms shall be completed.

   d) A written statement prepared by the Environmental Professional regarding the presence of any rare animals or plants or significant natural communities. The Environmental Professional shall use the NYSDEC Environmental Resource Mapper to make this determination. If any rare species are identified, then determine if the rare species are listed as endangered or threatened and whether the NYSDEC determines the proposed use may be harmful to the species or their habitat. If so, address to the satisfaction of the NYSDEC.

   e) A copy of the applicable SPDES permit and any local municipal permits related to use of the site.

   f) A listing of other Environmental Permits which were obtained by the Authority for the project. These are referenced in the contract proposal.

   g) A completed NYSTA Property Release form. The form is available through the Project Engineer.

   h) A plan showing all restoration work. This includes, but is not limited to, plans for grading, surface restoration details, and erosion and sediment control.

4. This requirement does not waive other provisions of the contract related to use of lands outside the Right of Way. Rather, it shall be viewed as supplementary. The following contract provisions still remain in effect:

   §107-08 Protection and Restoration of Property and Landscape, Subsection B. Outside the Right of Way
   §107-10 Managing Surplus Material and Waste

COMPLIANCE WITH SPDES REGULATIONS

The Contractor is advised that the NYS Thruway Authority has evaluated Stormwater requirements for this project and has determined that coverage is not warranted under NYS Department of Environmental Conservation's SPDES General Permit for Stormwater Discharges from Construction Activity (GP-0-15-002). The Contractor shall read and understand the requirements of GP-0-15-002. In the event the Contractor's operations, e.g., clearing and grubbing, expanded staging area; will cause an increase in ground disturbance beyond the amount identified in the Contract Documents, coverage under GP-0-15-002 may be required. Prior to commencing these operations, the Contractor should immediately advise the Project Engineer, who will in turn discuss the request with the Project Designer and Division Environmental Specialist or Environmental Point of Contact.

- In the event coverage is required under GP-0-15-002 as a result of these operations, the Contractor will be required to prepare a Stormwater Pollution Prevention Plan (SWPPP) and submit a Notice of Intent (NOI) with the NYS Department of Environmental Conservation.

- In the event coverage is required under GP-0-15-002 as a result of changes made by the Authority/Corporation, the Authority/Corporation will be required to prepare a SWPPP and submit a NOI.

In either case, the Contractor will not be allowed to proceed until verification of coverage under GP-0-15-002 has been provided to the Project Engineer. The Contractor shall make no claim against the Authority/Corporation for delays resulting from preparing a SWPPP, filing a NOI, and seeking verification of permit coverage.

SPECIAL NOTE

DIESEL EMISSION REDUCTION ACT (DERA) REGULATORY COMPLIANCE

All Authority/Corporation Contractors are made aware that Environmental Conservation Law (ECL) 19-0323 and the New York State Department of Environmental Conservation (NYSDEC) regulation 6 NYCRR Part 248 *Use of Ultra Low Sulfur Diesel (ULSD) Fuel and Best Available Retrofit Technology (BART) for Heavy Duty Vehicles* requires retrofit of all regulated heavy duty diesel vehicles working on all State awarded contracts. Current statute sets December 31, 2015 as the date when all regulated vehicles must be retrofitted with BART. A link to NYSDEC's enforcement discretion which states the current deadline is located at: http://www.dec.ny.gov/chemical/74288.html. The New York State Thruway Authority/Canal Corporation (NYSTA/CC) and its Contractors are responsible for annual reporting.

All Authority/Corporation Contractors shall make determinations of regulatory applicability for vehicles in their inventory used on active Authority/Corporation contracts during each calendar year. These determinations shall be based on the definition of Heavy Duty Vehicle (HDV) including on and off road diesel vehicles having gross vehicle weights in excess of 8,500 pounds, excluding vehicles that are exempt as defined in 6 NYCRR 248-1.1(b)(14). Contractors shall also quantify ULSD fuel used by regulated vehicles in active contract work during the calendar year.

An electronic copy of 6 NYCRR Part 248 can be accessed at http://www.dec.ny.gov/regs/2492.html. Electronic copies of the Regulated Entity Vehicle Inventory Form and the Regulated Entity and Contractors Annual Report Form can be accessed under Part 248 – Use of Ultra Low Sulfur Diesel Fuel and Best Available Retrofit Technology for Heavy Duty Vehicles at the following link: www.dec.ny.gov/chemical/4754.html.

To allow for required reports to be submitted to NYSDEC by the regulatory deadline of November 1, each year, DERA annual reporting by Authority/Corporation Contractors shall be submitted to NYSTA/CC by October 1, of every year reporting the required information from the previous calendar year (i.e., all 2014 information to NYSTA/CC by October 1, 2015, etc.).

Electronic mail submissions can be sent to dieselreport@thruway.ny.gov

SPECIAL NOTES

GREEN CONSTRUCTION REQUIREMENTS

ULTRA LOW SULFUR DIESEL FUEL

In order to reduce diesel emissions, the Contractor shall use Ultra Low Sulfur Diesel (ULSD) fuel to operate all diesel engines used to complete the work that will operate for 10 hours or more on the contract site. ULSD fuel requirements shall apply to:

- All diesel engines/equipment.
- Stationary and mobile equipment.
- Owned, leased and rented equipment.

The hours the piece of equipment is used to complete the work is defined as the actual time the engine is running. The time may be continuous or discontinuous and includes warm-up periods idling, in traffic periods, etc.

The Contractor shall repair deficiencies when any diesel powered construction equipment is in non-compliance. When non-compliance items are identified by NYSTA/CC, the Contractor will be notified for correction within a 24-hour period.

SPECIAL NOTES

GREEN CONSTRUCTION REQUIREMENTS

CONTROLLING EXPOSURE TO DIESEL EXHAUST

The Contractor shall exercise measures to protect "Sensitive Receptors" from the impacts of diesel exhaust fumes. Sensitive Receptors include, but are not limited to: hospitals, schools, daycare facilities, building fresh air or ventilation intakes, elderly housing or convalescent facilities. The Contractor shall ensure that diesel powered engines are located away from building air conditioners and windows.

The goal is to minimize exposure of Sensitive Receptors in close proximity to diesel exhaust, in terms of both concentration and time. In general, close proximity is defined as within 15 meters of a Sensitive Receptor. Mitigation techniques include positioning stationary equipment exhausts greater than 15 meters from Sensitive Receptors, extension of equipment exhausts through the use of flexible tubing; protecting building air intakes; and the use of moving operations.

Idling time for diesel powered equipment shall be limited to three consecutive minutes for delivery and dump trucks and all other diesel powered equipment except as follows:

- When a "mobile source" (vehicle) is forced to remain motionless because of traffic conditions or mechanical difficulties over which the operator has no control.
- When it is necessary to operate a loading, unloading or processing device.
- When the outdoor temperature is less than - 3°C (27°F).
- When the "mobile source" is being repaired.

Arrow panels and portable variable message signs shall be solar powered wherever possible or practical.

Whenever possible and practicable, the Contractor shall establish staging areas for diesel powered vehicles waiting to load or unload materials at the work site. Such areas shall be located where diesel emissions have the least impact on Sensitive Receptors and the general public.

SPECIAL NOTES

GREEN CONSTRUCTION REQUIREMENTS

DUST CONTROL

The Contractor shall minimize dust from disturbed soil surfaces or other materials that can cause off-site damage, health hazards and traffic safety problems. Dusty conditions resulting from the Contractor's operations shall be corrected at no additional cost to the State. Buffer areas of vegetation should be left where practical. Water quality shall be considered when selecting materials for dust control. An approved dust palliative may be used in conformance with applicable conditions placed on its use. A list of acceptable dust palliatives is available at: www.nysdot.gov/divisions/engineering/technical-services/geotechnical-engineering-bureau/dust-palliatives .

For areas not subject to traffic, products and materials may be applied or placed on soil surfaces to prevent airborne migration of soil particles, including:

- Vegetative Cover –provides the most practical method of dust control.
- Mulch (including rolled erosion control products) –provides a fast, effective method of dust control.
- Spray Adhesives –Generally composed of polymers in a liquid or solid form mixed with water to form an emulsion that is sprayed on the soil surface. The mixing ratios and application rates will be in accordance with the manufacturer's recommendations for the specific soils on the site. Adhesives shall not be applied to wet soils or if there is a probability of precipitation within 48 hours.

For areas subject to traffic (traveling public or construction traffic) products and materials may be applied or placed on soil surfaces to prevent airborne migration of soil particles, including:

- Water Sprinkling – The site may be sprayed with water until the surface is wet. This is especially effective on haul roads and access routes.
- Polymer Additives –Polymers shall be mixed with water and applied to the driving surface using mixing ratios and application rates in accordance with the manufacturer's recommendations. No application of the polymer will be made if there is a probability of precipitation within 48 hours of its proposed use. Any polymers must be used in accordance with the NYSDEC issued "Conditions for Use" and "Application Instructions." This information can be obtained from the NYSDEC website.
- Barriers – Woven geotextiles or stone can be placed on the driving surface to effectively reduce dust throw and particle migration on haul roads.
- Windbreak – A silt fence or similar barrier can control air currents at horizontal intervals equal to ten times the barrier height. Preserve existing vegetation that acts as a wind barrier as much as practical.
- Wheel Washing – Mechanical or manual wet-method cleaning of on-road construction vehicle tires prior to leaving site.

SPECIAL NOTE

GENERATOR KNOWLEDGE FOR DISPOSAL OF TREATED WOOD

The U.S. Environmental Protection Agency (EPA) and New York State Department of Environmental Conservation (NYSDEC) technique for evaluating whether a material is hazardous for toxicity is the Toxicity Characteristic Leaching Procedure (TCLP). TCLP testing of pentachlorophenol ("penta") and creosote treated wood by the Electric Power Research Institute, Association of American Railroads, and others has conclusively demonstrated that treated wood products are not a hazardous waste. Under EPA's and NYSDEC's rules, such "generator knowledge" can be utilized in place of testing to determine that a waste is not hazardous. This information can be used as evidence that treated wood products can be disposed as non-hazardous waste, based on generator knowledge, in lieu of physical testing.

Generator knowledge information, obtained from the American Wood Preservers Institute (AWPI) can be viewed at their web site located at www.awpi.org . AWPI's information comes from studies conducted by the Electric Power Research Institute (EPRI), the Washington Public Ports Association (WPPA), and the Association of American Railroads (AAR). EPRI test results are for both penta-treated and creosote-treated wood. WPPA and AAR test results are for creosote-treated wood.

NOTE: Arsenically-treated (*e.g.,* chromated copper arsenate [CCA]) wood products disposed by the end user are exempt from classification as a federal hazardous waste regardless of the TCLP results for specified constituents from any individual sample. Also, wood products treated with preservatives that contain no TCLP constituents (*e.g.,* Kodiak Preserved Wood containing Copper Dimethyldithiocarbamate) are not hazardous waste.

SPECIAL NOTES
FOREST INSECT DISEASE CONTROL

MOVEMENT OF WOOD MATERIALS FROM PROJECT SITES

Pursuant to New York State Department of Environmental Conservation (NYSDEC) Regulations, 6NYCRR, part 192.5, *Firewood Restrictions to Protect Forests from Invasive Species,* it is unlawful to transport any firewood material more than 50 miles from its point of origin to limit the spread of invasive insect species. "Firewood" shall mean all wood of any species, cut or not cut, split or not split, regardless of length which is (a) in a form and size appropriate for use as a fuel, or (b) which is destined for use as a fuel. Firewood shall not include kiln-dried dimensional lumber, wood that has been chipped to a maximum piece size that is no greater than 1-inch in two dimensions, or logs or wood being transported to sawmills or other manufacturing facilities for use in their primary operations. All Thruway Authority/Canal Corporation (TA/CC) projects are subject to this requirement. Additional information can be found at the following link: http://www.dec.ny.gov/regs/4079.html

If firewood is to be moved within 50 miles of its point of origin a "Self-Issued Certificate of Origin for Transport and Possession of Untreated Firewood" must be completed. This form can be found at the following link: http://www.dec.ny.gov/docs/lands_forests_pdf/selfisscert.pdf

INVASIVE SPECIES AND QUARANTINE MATERIALS MOVEMENT

NYSDEC Regulations, 6NYCRR, part 192.6, *Quarantine Orders,* No person shall fail to comply with the provisions of any quarantine order issued by the Department pursuant to Environmental Conservation Law (ECL) section 9-1303. To the extent the provisions of section 192.5 *Firewood Restrictions to Protect Forests from Invasive Species* and such quarantine order are in conflict, the more restrictive provision shall apply. TA/CC is under New York State and Federal ash quarantines where it is unlawful to transport any ash material outside of several counties (see quarantine maps at http://www.agriculture.ny.gov/PI/eab/emerald_ash_borer_quarantine.pdf and http://www.dec.ny.gov/animals/47761.html). Therefore, any parts of ash trees, including leaves, bark, stumps, limbs, branches, roots, and ash logs of any length, and firewood (see above for definition of firewood) from ***ANY*** tree species, are all considered regulated articles and must be handled properly. Tree-felling, clearing and grubbing operations at project sites may result in the contractor's need to handle materials from ash tree species and/or firewood or chips from ***ANY*** tree species. To the greatest extent possible in areas of clearing and grubbing, ash trees should be pre-identified and marked prior to commencement of construction to promote the proper handling of these materials.

Un-infested ash materials in any form may be moved offsite, but only within the quarantine zone. Firewood from ***ANY*** tree species may never be moved more than 50 miles and never from the quarantine area, into non-quarantine areas. Transport of any wood needs the required transport certificate: http://www.dec.ny.gov/docs/lands_forests_pdf/selfisscert.pdf

Note: According to the quarantine maps, several parts of the Thruway are the boundary between the quarantine area (south) and the non-quarantine area (north). Therefore, transport of any wood material would be prohibited across the roadway from south to north, but acceptable from north to south.

Note: Any ash materials that are known or suspected to be infested with live emerald ash borer pests in any life stage must be reported immediately to the EIC and/or designee for further appropriate action and coordination with regulatory agencies.

SPECIAL NOTES
FOREST INSECT DISEASE CONTROL

Any ash materials chipped to a size no greater than 1-inch in at least two dimensions is considered safe to be transported outside the quarantine zone, but only in accordance with a Chip/Mulch Agreement and Transport Agreement received from the NYS Department of Agriculture and Markets (NYSDAM). If any regulated ash materials must be moved outside of the currently quarantined area, a certification from the NYS Department of Agriculture and Markets (NYSDAM) or USDA Animal & Plant Health Inspection Service (APHIS) must be obtained. For further information see the following links:
http://www.dec.ny.gov/animals/47761.html
http://www.agriculture.ny.gov/PI/eab.html

MARKER RELOCATION DURING CONSTRUCTION
EXISTING MILE MARKERS AND TENTH-MILE MARKERS AND DELINEATORS

All Mile Markers and Tenth-Mile Markers are to be maintained during construction of this project. The Contractor will be allowed to temporarily relocate them to avoid damage to them or for constructability purposes. The Mile Markers and Tenth-Mile Markers can be moved but the new location must be visible to traffic and be reasonably close to their original location. The Mile Markers must be returned to their original location upon completion of construction at that location. Cost for this work shall be included in the bid price for the various pay items in the Project, unless the work is specifically called for in the Contract Documents.

If the Contract calls for replacement of existing Milemarkers and/or Tenth-Milemarkers, they shall remain in place, or reset to a location reasonably close to their original location, until the new markers are installed.

SPECIAL NOTE

PG BINDER AND MIX DESIGN LEVEL

Requirements of this note apply to all Section 402 and Section 404 Asphalt (HMA and WMA) items in this contract.

PG BINDER

Use polymer or Terminal Blend Crumb Rubber modified **PG 64V-22** (Very High) meeting the requirements of AASHTO M 332, *Standard Specification for Performance Graded Asphalt Binder using Multiple Stress Creep Recovery (MSCR),* for the production of hot mix asphalt mixtures for this project. In addition, the binder grade must also meet the **elastomeric** properties as indicated by one of the following equations for $\%R_{3.2}$:

1. **For $J_{nr3.2} \geq 0.1$, $\%R_{3.2} > 29.371 * J_{nr3.2}^{-0.2633}$**
2. **For $J_{nr3.2} < 0.1$, $\%R_{3.2} > 55$**

Where
$R_{3.2}$ is % recovery at 3.2 kPa
$J_{nr\ 3.2}$ is the average non-recoverable creep compliance at 3.2 kPa

When terminal blend CRM PG binder is used, the following shall apply:

- Crumb rubber particles shall be finer than #30 sieve size.
- The CRM PG binder shall be storage-stable and homogeneous.
- The Dynamic Shear Rheometer (DSR) shall be set at 2-mm gap.
- The CRM PG binder shall be 99% free of particles retained on the 600 µm sieve as tested in accordance with Section 5.4 of M 332.

Use of polyphosphoric acid (PPA) to modify the PG binder properties is prohibited for mixtures under this contract. This prohibition also applies to the use of PPA as a cross-linking agent for polymer modification.

MIX DESIGN

The mixture designs must be developed in accordance with the criteria specified in the HMA items that are appropriate for an Estimated Traffic Level of >30 Million ESALs.

Note: The PG binder for this project will be modified with polymer or CRM additives to meet the requirements stated above. Handling of the HMA shall be discussed at pre-construction and pre-paving meetings.

SPECIAL NOTE

RAP PG Binder Contribution

When greater than 10% of recycled asphalt pavement (RAP) is utilized in the production of hot mix asphalt (HMA) Top Course for this contract, the following minimum asphalt content will be utilized in the final mixture design calculation for optimum asphalt content:

HMA Mixture	Minimum Asphalt Content (%)
9.5 HMA	6.0
12.5 HMA	5.4

The mixture design will be formulated such that all the volumetric properties are within the criteria specified in the latest Material Method 5.16. The total targeted asphalt content of virgin binder and the accepted RAP asphalt contribution shall not be less than the minimum asphalt content of the mix design during production indicated in the above table.

SPECIAL NOTE

OPTIONAL USE OF WARM MIX ASPHALT (WMA) TECHNOLOGIES

The contractor has the option of using an Approved WMA Technology in the production of all 402, *Hot Mix Asphalt (HMA)* items, except *SUPERPAVE HMA with Ice Retardant* items, *Waterproofing Bridge Deck HMA* items, and *Paver-Placed Surface Treatment* items, at no additional cost to the State.

If the contractor chooses to use a WMA technology, the provisions of §401 and §402 shall apply including the following:

Use an approved technology appearing on the Approved List for *Technologies for Warm Mix Asphalt*. Design a mixture using a WMA Technology in accordance with MM 5.16, *Superpave Hot Mix Asphalt Mixture Design and Mixture Verification Procedure*. At a minimum, a one point verification of the mixture's volumetric properties is acceptable for the following situations:

- When the WMA mix design is based on an existing Production Status HMA mix design.
- When the WMA mix design is based on, and utilizes a different WMA technology than, an existing Production Status WMA mix design.

Comply with the latest manufacturer's "Production, Testing, and Compaction Details" from the Approved List for incorporating the WMA technology. Test specimens may be made from plant produced or laboratory prepared WMA. Test specimens must be made from plant produced WMA if adding the WMA technology in the lab does not simulate the production process. The Regional Materials Engineer (RME) may require a State representative be present during the fabrication and testing. Submit the WMA design to the RME for review and verification at least 14 calendar days before production, including:

- Name of WMA technology and the target dosage rate.
- If using an additive other than water,
  - Submit a MSDS for the additive.
  - Submit either enough of the additive for the laboratory mix design verification, or the additive pre-blended in the PG Binder at the correct dosage. If the additive is not pre-blended into the PG Binder, include directions for properly incorporating the additive into the laboratory made mixture.
- Prior to the submission of any mix design, contact the RME to determine if there is an increased concern regarding the mixture's moisture susceptibility based on the WMA technology and/or the type of aggregate being used, or the performance of similar mixes. The RME may require AASHTO T 283 moisture susceptibility test results, meeting a minimum Tensile Strength Ration (TSR) of 80%, as part of the mix design submission.

Submit Production Quality Control Plan revisions incorporating the WMA technology if not previously submitted.

For 80 Series Compaction Method, complete all breakdown roller passes before the mat temperature falls below 230° F, unless approved by the Director, Materials Bureau.

When the asphalt mixture is being placed over a *Sheet-Applied Waterproofing Membrane*, maintain a minimum delivery temperature in accordance with the Material Detail Sheets prepared by the membrane manufacturer.

HMA WITH CRUSHED GLASS

SCOPE. This specification covers the requirements for the addition of crushed glass to hot mix asphalt mixtures. The provisions of Section 402 - Hot Mix Asphalt (HMA) Pavements applies except that the Contractor has the option of blending of the crushed glass in the following mixes:

1 1/2 inch Nominal Max. Size
1 inch Nominal Max. Size
3/4 inch Nominal Max. Size
Truing and Leveling Course

If the Contractor chooses the crushed glass option, the following modifications to the Standard Specifications shall apply:

MATERIAL REQUIREMENTS

Crushed glass shall be subject to the approval of the Regional Materials Engineer prior to its use. The crushed glass shall contain no more than 1% (by weight) contaminants and shall meet the following gradation:

Sieve Size	Percent Passing
3/8 inch	100
1/4 inch	90 - 100
No. 30	0 - 20

Note: The gradation requirements may be modified upon approval by the Regional Materials Engineer.

Crushed glass may be included in the mixture up to 5%, maximum, of the total aggregate weight. The crushed glass, aggregate, and Performance-Graded Binder (PGB) shall meet the requirements specified in the Standard Specification §401-2.01 Hot Mix Asphalt Designs and §401-2.04 Performance-Graded Binder.

CONSTRUCTION DETAILS

The crushed glass shall be proportioned from a separate feed bin approved by the Regional Materials Engineer. In addition, all requirements pertaining to aggregate shall apply to crushed glass including the equipment requirements for automatic proportioning and recording as stipulated for aggregate in §401-3.08.

METHOD OF MEASUREMENT. The provisions of §401-4 and §402-4, Method of Measurement, shall apply.

BASIS OF PAYMENT. The provisions of §402-5, Basis of Payment, shall apply.

USE OF RECLAIMED ASPHALT SHINGLES (RAS) IN THE PRODUCTION OF ASPHALT MIXTURES

DESCRIPTION. The requirements below cover the use of Reclaimed Asphalt Shingles (RAS) in the production of asphalt mixtures. Sections 401 and 402 of the NYS Standard Specifications apply except as modified herein.

MATERIAL REQUIREMENTS

The Contractor has the option of using the following:

- Manufactured Waste (MW) RAS may be used in shim, base, binder, and top courses (excluding 6.3 HMA Top Course, Waterproofing Bridge Deck Overlay, and Ice Retardant mixtures).
- Post Consumer Waste (PCW) RAS and may be used in shim, base and binder courses.

The RAS must be stockpiled at the plant facility and shall be subject to the approval of the Regional Materials Engineer (RME) prior to its use. RAS shall meet the following requirements:

- Shall be from a source that has obtained a beneficial use determination (BUD) from the NYS Department of Environmental Conservation (DEC) as specified in 6 NYCRR 360-1.15.
- Shall be certified to be asbestos free.
- Shall be completely free of nails. In addition, it shall contain no more than 1% by weight of other deleterious materials such as glass, wood, plastic, etc.
- Shall meet the following gradation:

Sieve Size	Percent Passing	
	Min.	Max.
¼ inch (6.3 mm)	100	-
#4 (4.75 mm)	90	100
#8 (2.36 mm)	75	90
#16 (1.18 mm)	50	70
#30 (0.600 mm)	30	55
#50 (0.300 mm)	15	40
#100 (0.150 mm)	5	25
#200 (0.075 mm)	-	15

The maximum RAS allowed in the mixture is 2% by weight of the total mixture. A Control Plan for using shingles in HMA shall be developed and submitted to the Regional Materials Engineer detailing the control and testing of the stockpiles. RAS shall be uniformly blended with RAP to reduce clumping and must be stockpiled separate from other stockpiles. Other methods of reducing RAS clumping can be utilized with the approval of the RME.

Rejuvenator. A rejuvenator shall be added to PCW RAS using a pugmill or similar equipment to pre-blend and stockpile the rejuvenated PCW RAS. Alternatively, a spray system may be used to spray the rejuvenator onto the PCW RAS prior to its introduction into the plant mixer. The

rejuvenator shall meet the requirements of ASTM D 4552, *Standard Practice for Classifying Hot-Mix Recycling Agents*. Other liquid products or methods which facilitate softening of the PCW RAS binder may be used with the approval of the Regional Materials Engineer. The application rate shall be as recommended by the rejuvenator supplier.

Mixture Design. Prior to production of the HMA, the mixture design shall be developed to meet all the requirements in the latest Materials Method (MM) 5.16, *Hot Mix Asphalt (HMA) Mixture Design and Mixture Verification Procedures,* available on the Department's website. The mixture design shall also meet the performance test criteria listed in the table below. The testing must be performed by an AASHTO Materials Reference Laboratory (AMRL) approved laboratory that has the capability of performing these tests. When RAS is used in conjunction with RAP, the total percentage of reclaimed material shall not exceed the maximum of 20% for Top Course and Binder Course, and 30% for Base Course currently allowed under the specifications during the production of HMA.

Mixture Performance Test Requirements

Tests	Specification Criteria
Dynamic Modulus, AASHTO TP 79	Report
Flow Number, AASHTO TP 79	200, min.
Flexural Beam Fatigue, AASHTO T 321, 750μ-Strains	10,000 cycles, min.
Overlay Tester, TxDOT TEX-248F	300 cycles, min.

Reclaimed PG Binder Ratio: The ratio of reclaimed PG binder from the RAP and RAS to the total PG binder content shall not exceed 0.2.

CONSTRUCTION DETAILS

The provisions of Section 401 and Section 402 apply except that the RAP/RAS stockpile shall be tested at a frequency of at least once per day of production to determine the asphalt content and the gradation of the combined reclaimed material.

REINFORCEMENT FOR CEMENT CONCRETE

Bar reinforcement and wire fabric specified in the Contract Documents shall be in accordance with the following:

Bar Reinforcement used on this project shall meet the requirements of Section 709-01 *Bar Reinforcement, Grade 60,* or Section 709-14 *Bar Reinforcement, Grade 75,* as detailed on the plans. No substitutions will be allowed. Bar reinforcement (for the items listed below) shall be galvanized and fabricated in accordance with ASTM A767 and meet the requirements of Section 709-11 *Galvanized Bar Reinforcement*. The requirements of ASTM A767 Section 4.3 (Chromating) will not be waived.

Wire Fabric Reinforcement used on this project (for the items listed below) shall meet the requirements of Section 709-02 *Wire Fabric for Concrete Reinforcement*. Any Wire Fabric Reinforcement required for the items listed below shall be galvanized in accordance with Section 719-01 *Galvanized Coatings and Repair Methods*, Type I. Galvanized Wire Fabric Reinforcement shall be fabricated and galvanized in accordance with ASTM A123 and ASTM A767. The requirements of ASTM A767 Section 4.3 (Chromating) will not be waived.

Item Numbers that require the use of **Galvanized Bar Reinforcement** and/or **Galvanized Wire Fabric Reinforcement** on this project are as follows:

555.0105
586.02--25
606.3011
606.3042
606.3062

Reinforcement for Reinforced Concrete Pipe and Related Drainage Structures shall meet the requirements of Section 706 – *Concrete, Clay, and Plastic Pipe.*

SPECIAL NOTE

DRILLING/GROUTING

No petroleum-based compounds shall be used in the lubrication of downhole drilling rods/equipment during the grouting procedure.

REQUIRED DOCUMENTATION FOR ALL ATTENUATING TERMINALS FOR GUIDE RAIL AND ALL ATTENUATORS

A minimum of two (2) weeks prior to installing any materials required under these items, the Contractor shall submit to the Engineer two (2) copies of the Manufacturer's Drawings, Design Manuals, Installation Manuals, and Maintenance Manuals prepared for the product and one (1) copy of the same manuals intended for the Section Supervisor of the Section where the unit is being installed. The project being installed shall be the manufacturer's most current approved unit. The submitted drawings and manuals shall match the provided product. The Contractor shall install the crash-cushion only after receiving authorization from the Engineer to do so. No payment shall be made until all the above drawings and manuals have been transmitted to the Engineer and the Section Supervisor.

Reflective sheeting shall be applied to the nose of each attenuating device installed. If sheeting is not specified, it shall consist of alternating 4 inch wide yellow retroreflectorized stripes and black opaque stripes placed diagonally at 45 degrees or in chevron formation as directed by the Engineer. The retroreflectorized stripes shall conform to §730-05, Reflective Sheeting, ASTM Type IX (Class E). The reflective sheeting shall be rectangular in shape and cover the entire approach end of the attenuating terminal or attenuator. The cost of the reflective sheeting shall be included in the bid price for each attenuator and attenuating terminal.

DELIVERY AND PICK-UP
OF
SIGN PANELS, MILE MARKERS, DELINEATORS AND SNOWPLOW MARKERS

Overhead and ground-mounted sign panels, mile markers, delineators and/or snowplow markers included in the project will be supplied by the Thruway Authority and delivered to Catskill Section Maintenance located at 600 Route 23B (@ Interchange 21), Leeds, NY 12451 for pick-up by the Contractor. The Contractor shall request the signs from the Engineer a minimum of 45 days prior to the scheduled installation. The Contractor shall inspect the condition of the signs and notify the Engineer of any defects prior to pick-up.

SPECIAL NOTE:
CONCRETE BARRIER TO GUIDE RAIL AND MEDIAN BARRIER

Concrete barrier sections that connect to other types of guide rail or median barrier (box beam, corrugated beam, thrie beam, etc.) shall be pre-cast in accordance with Section 704-05.

AFFIRMATIVE ACTION REQUIREMENTS

GOALS FOR DISADVANTAGED/MINORITY/WOMEN'S BUSINESS ENTERPRISE (D/M/WBE) PARTICIPATION

The Department has established the following utilization goal(s) for this contract, expressed as a percentage of the total contract bid amount. For clarification of Disadvantaged Business Enterprise (DBE) Utilization, Minority Business Enterprise (MBE) Utilization or Women's Business Enterprise (WBE) Utilization requirements refer to §102-12 *D/M/WBE Utilization* of the Standard Specifications.

Disadvantaged Business Enterprise (DBE) Utilization Goal	_____% (Federal-Aid Only)
Minority Business Enterprise (MBE) Utilization Goal	__5__% (Non-Federal-Aid Only)
Women's Business Enterprise (WBE) Utilization Goal	__10__% (Non-Federal Aid Only)

Directories and/or Information related to the current certification status of Disadvantaged Business Enterprises, can be obtained from the NYS Unified Certification Program website at:
http://biznet.nysucp.net

Direct questions concerning Disadvantaged Business Enterprise Utilization to:

NYS Department of Transportation
Office of Construction
50 Wolf Road Pod 51
Albany, New York 12232
(518) 457-6472

Direct questions concerning Disadvantaged Business Enterprise Certification to:

NYS Department of Transportation
Contract Audit Bureau
DBE Certification
50 Wolf Road, 1st Floor South
Albany, New York 12232
(518) 457-3180

Directories and/or information related to the current certification status of Minority and Women's Business Enterprises can be obtained by contacting:

Empire State Development Corporation
Office of Minority and Women's Business Development
625 Broadway
Albany, New York 12207
(518) 292-5100
https://ny.newnycontracts.com/

EQUAL EMPLOYMENT OPPORTUNITY REQUIREMENTS – STATE

1. **REQUIREMENTS** – During the performance of this contract, the Contractor agrees to comply with the Equal Employment Opportunity (EEO) requirements specified herein.

2. **DEFINITIONS –** As used in these requirements, the following definitions will apply:

   A. "Covered Area" means the geographical area described in the solicitation from which this contract resulted or the geographic area within which this contract will be performed.

   B. "Authority" means the New York State Thruway Authority.

   C. "Executive Director" means the Executive Director of the New York State Thruway Authority, or his/her duly authorized representative.

   D. "Compliance Unit of Contracts and Construction Management" means the Thruway Authority's Compliance Unit or his/her duly authorized representative.

   E. "Employer Identification Number" means the Federal Social Security Number used on the Employer's Quarterly Federal Tax Return, U.S. Treasury Department form 941.

   F. "Minority" includes:

      (i) Black (all persons having origins in any of the Black African racial groups not of Hispanic origin);

      (ii) Hispanic (a person of Mexican, Puerto Rican, Dominican, Cuban, Central or South American descent of either Indian or Hispanic origin, regardless of race;

      (iii) Asian and Pacific Islander (all persons having origins in any of the original peoples of the Far East, Southeast, Asia, the Indian Subcontinent, or the Pacific Islands); and

      (iv) American Indian or Alaskan Native (all persons having origins in any of the original peoples of North America and maintaining identifiable tribal affiliations through membership and participation or community identification. Identification may be made by any suitable authority in the community such as an educational institution, religious organization, or a state agency).

3. **NON-DISCRIMINATION CLAUSE** – The Contractor will ensure equal employment opportunity by not discriminating against any applicant for employment because of race, color, religion, sex, national origin, age, disability, or marital status, regarding, (among other things) the following: upgrading, demotion, transfer, recruitment, recruitment advertising, layoff, termination, rates of pay or other forms of compensation and selection for training, including apprenticeship.

4. **MINORITY AND WOMEN EMPLOYMENT GOALS –** The Contractor shall make a good-faith effort to ensure equal employment opportunity by taking the affirmative action's set forth in paragraph 6A through P of these requirements. The Contractor's success in achieving or bettering the goals set forth herein shall be a substantial factor in any determination of whether the Contractor has complied with its obligation to ensure equal employment opportunity in the performance of this contract. The goals are expressed as percentages of the total hours of employment and training that the Contractor should reasonably be able to give to female or minority employees in a certain covered area. The hours of minority and female employment and training must be substantially uniform throughout the length of the contract, and in each trade. These goals were established from materials published by the NYS Department of Economic Development based on appropriate workforce, demographic or other relevant data or labor force developed by the Division of Minority & Women's Business Development utilizing the 1990 Census Data.

EQUAL EMPLOYMENT OPPORTUNITY REQUIREMENTS – STATE

5. **TRAINING SPECIAL PROVISION –** If the contract proposal includes the Training Special Provision, the Contractor is required to comply with that provision as part of these Equal Employment Opportunity Requirements. The Training Special Provision requires the Contractor to provide training to at least one minority or woman indentured apprentice or trainee. If the Contractor fails to meet the employment goals for minorities or women specified herein, additional training of minorities and women will be required to satisfy the employment goals.

6. **AFFIRMATIVE ACTION STEPS** – The Contractor shall implement affirmative action steps at least as extensive as the following:

   A. Ensure and maintain a working environment free of harassment, intimidation, and coercion at all sites, and in all facilities at which the Contractor's employees are assigned to work. The Contractor shall specifically ensure that all foremen, superintendents, and other on-site supervisory personnel are aware of a carry out of the Contractor's obligation to maintain such a working environment, with specific attention to minority and female individuals working as such sites or in such facilities.

   B. Establish and maintain a current list of minority and female recruitment sources, provide written notification to minority and female recruitment sources and to community organizations when the Contractor or its unions have employment opportunities available, and maintain a record of the organizations' responses.

   C. Maintain a current file of the name, address, and telephone number of each minority and female off-the-street applicant and minority or female referral from a union, a recruitment source, or community organization and of the action which was taken with respect to each such individual. If such individual was sent to the union hiring hall for referral and was not referred back to the Contractor by the union, or if referred, not employed by the Contractor, this shall be documented in writing to the Compliance Unit and noted in the file with the reasons therefore, along with whatever additional actions the Contractor may have taken.

   D. Provide immediate written notification to the Compliance Unit when the Contractor has information that the union referral process has impeded the Contractor's efforts to meet its obligation.

   E. Develop on-the-job training opportunities and/or participation in training programs which expressly include minorities and women, including upgrading programs and apprenticeship and trainee programs relevant to the Contractor's employment needs, especially those programs funded or approved by the United States Department of Labor, the New York State Department of Labor, or the New York State Thruway Authority and appropriate for utilization on New York State Thruway Authority projects. The Contractor shall provide notice of these programs to the sources complied under 6.B. above. If the Contractor fails to develop or participate in such apprentice or training programs, its failure to meet the goal set forth herein will be presumed to be noncompliance with these requirements.

   F. Disseminate the Contractor's equal employment opportunity policy by providing notice of the policy to unions and training programs and requesting their cooperation in assisting the Contractor in meeting its equal employment opportunity obligations, by including it in any policy annual and collective bargaining agreement, by publicizing it in the company newspaper, annual report, and other similar items, by specific review of the policy with all management personnel and with all minority and female at least once a year, and by posting the Contractor's equal employment opportunity policy on bulletin boards accessible to all employees at each location where work under this contract is performed.

EQUAL EMPLOYMENT OPPORTUNITY REQUIREMENTS – STATE

G. Review, at least annually, the Contractor's equal employment opportunity policy and affirmative action obligations under this requirement with all employees having any responsibility for hiring, assignment, layoff, termination, or other employment decision, including specific review of these items with on-site supervisory personnel such as superintendents, general forepersons, etc., prior to the initiation of work at any job site. A written record shall be made and maintained identifying the time and place of these meetings, persons attending, subject matter discussed, and disposition of the subject matter.

H. Disseminate the Contractor's equal employment opportunity policy externally by including it in any advertising in the news media, specifically including minority and female news media, and providing written notification to, and discussing the Contractor's equal employment opportunity policy with, other Contractors and subcontractors with whom the Contractor does or anticipates doing business.

I. Direct its recruitment efforts, both oral and written, to minority, female, and community organizations, to schools with minority and female students, and to minority and female students, and to minority and female recruitment and training organizations serving the Contractor's recruitment area and employment needs. Not later than one month prior to the date for the acceptance of applications for apprenticeship or other training by any recruitment source, the Contractor shall send written notification to organizations such as the above describing the openings, screening procedures, and tests to be used in the selection process.

J. Encourage present minority and female employees to recruit other minority persons and women and, where reasonable, provide after school, summer, and vacation employment to minority and female youth both on the site and in other areas of the Contractor's workforce.

K. State in all solicitations or advertisements for employees placed by or on behalf of the Contractor that all qualified applicants will receive consideration for employment without regard to race, color, religion, sex, national origin, age, disability, or marital status.

L. Conduct, at least annually, an inventory and evaluation of all minority and female personnel for promotional opportunities and encourage these employees to seek or to prepare for such opportunities through appropriate training or other similar activities.

M. Ensure that seniority practices, job classifications, work assignments, and other personnel practices do not have a discriminatory effect by continually monitoring all personnel and employment related activities to ensure that the equal employment opportunity policy and the Contractor's obligations under this requirement are being carried out.

N. Ensure that all facilities and company activities are non-segregated except that separate or single-user toilet and necessary changing facilities shall be provided to assure privacy between the sexes.

O. Send to each labor union or representative of workers with which the Contractor has a collective bargaining agreement or other contract or understanding, a notice advising the said labor union or workers' representative of the Contractor's commitments under this requirement and post copies of the notice in conspicuous places available to employees and applicants for employment.

P. Conduct a review, at least annually, of all supervisors' adherence to, and performance under, the Contractor's equal employment opportunity policies and affirmative action obligations.

EQUAL EMPLOYMENT OPPORTUNITY REQUIREMENTS – STATE

7. **CONTRACTOR ASSOCIATIONS –** Contractors are encouraged to participate in voluntary associations which assist in fulfilling one or more of their affirmative actions obligations. The efforts of a Contractor association**,** joint Contractor union, Contractor community, or other similar group of which the Contractor is a member and participant, may be asserted as fulfilling one or more of its obligations under this requirement provided that the Contractor actively participates in the group, makes every effort to ensure that the group has a positive impact on the employment of minorities and women in the industry, ensures that the concrete benefits of the program are reflected in the Contractor's minority and female workforce participation, makes a good faith effort to meet its individual goals, and can provide access to documentation which demonstrates the effectiveness of actions taken on behalf of the Contractor. The obligation to comply, however, is the Contractor's and failure of such a group to fulfill an obligation shall not be a defense for the Contractor's non-compliance.

8. **TRANSFER OF MINORITY OR FEMALE EMPLOYEES –** Through implementing the affirmative action's set forth above and the Contractor's other efforts to ensure equal employment opportunity, the Contractor must have made a commitment to employ minorities and women throughout the life of the contract. The transfer of minority or female employees or trainees from Contractor to Contractor or from project to project for the sole purpose of meeting the Contractor's goals shall be violation of the contract.

9. **CREDITING NON-WORKING TRAINING HOURS TOWARD EMPLOYMRNT GOALS –** In order for the non-working training hours of apprentices and trainees to be counted in meeting the goals, such apprentices and trainees must be employed by the Contractor during the training period, and the Contractor must have made a commitment to employ the apprentices and trainees at the completion of their training, subject to the availability of employment opportunities. Trainees must be trained pursuant to training programs approved by the United States Department of Labor, the New York State Department of Labor or the New York State Thruway Authority and appropriate for utilization on the New York State Thruway Authority projects.

10. **REQUIRED RECORDS**

    A. The Contractor shall designate a responsible official to monitor all employment related activity to ensure that the Contractor's equal employment opportunity policy is being carried out and to keep records. The records shall include the names, address, telephone number, construction trade, union affiliation, if any, employee identification number when assigned, social security number, race, sex, status (e.g. mechanic, apprentice, trainee, helper or laborer), dates of changes in status, hours worked per week in the indicated trade, rate of pay and locations at which the work was performed for each employee. Records shall be maintained in an understandable and retrievable form. To the extent that records kept by the Contractor for other purposes satisfy the requirements of this paragraph, the Contractor need not maintain separate records.

    B. The Contractor shall submit on a monthly basis "Employment Utilization Report" (TA-W1017-9) to the Engineer and the Compliance Unit. Records of the total employee utilization from the start of the contract up to and including the month being reported shall be submitted on these monthly reports. For the purpose of these reports, the hours of female employment and training and the hours of minority employment and training shall be separately calculated. All females, whether minority or non-minority, shall be calculated within the hours of female employment and minority females shall not be used in the calculation of hours of minority employment.

    C. For the purpose of the reports required above, the employment and training hours worked by each person may only be used once in any one month and the Contractor is cautioned that it may not discriminate against minority females in connection with attaining its affirmative action goals under these requirements.

EQUAL EMPLOYMENT OPPORTUNITY REQUIREMENTS – STATE

D. All records required by this Section must be retained for a period of three years following completion of the contract work and shall be available at reasonable times and places for inspection by authorized representatives of the Authority or the Compliance Unit.

11. GOALS NOT TO BE USED TO DISCRIMINATE – The Contractor shall not use the goals or affirmative action requirements to discriminate against any person because of race, color, religion, sex, national origin, age disability, or marital status.

12. NEW YORK STATE DEPARTMENT OF ECONOMIC DEVELOPMENT DIVISION OF MINORITY AND WOMEN'S BUSINESS DEVELOPMENT – The Contractor will comply with any procedures and guidelines established by the Director of the Office of Contract Compliance and Minority and Women-Owned Business Enterprise (hereinafter the Director of the Office of the Office of Contract Compliance) under the authority of New York State Governor's Executive Order 21, issued August 3, 1983 (hereinafter Executive Order 21) and will comply with any rules, regulations and orders of the Executive Director as may be promulgated pursuant to or under the authority of Executive Order 21, or other applicable law or order.

13. AVAILABILITY OF CONTRACTOR'S RECORDS – The Contractor will furnish all information and reports as may be required by the Director of the Office of Contract Compliance under the authority of Executive Order 21, or by rules, regulations and orders of the Executive Director as may be promulgated under or pursuant to Executive Order 21, and will permit access to its books, records and accounts by the Authority or the Compliance Unit for purposes of investigating compliance with these requirements and such rules, regulations, orders, procedures and guidelines.

14. ENFORCEMENT – In order to determine whether the Contractor has complied with the requirements, the Authority may proceed by order to show cause, compliance conference, hearing or any other lawful procedure upon due notice in writing to the Contractor. In the event the Authority finds that the Contractor has filed to comply with these requirements, this contract may be canceled, terminated, or suspended in whole or in part in accordance with the procedures authorized in Section 312 of Executive Law 15-A, Section 102-17 of the New York State Standard Construction Specifications and Section 40 of the Highway Law, and the Contractor may be declared ineligible for further New York State government contract or construction contracts, and such other sanctions may be imposed and remedies invoked as provided under the authority of Executive Order 21 or by rule, regulation, or order of the Executive Director, or as otherwise provided by law.

15. CONTRACTOR'S RESPONSIBILITY REGARDING COLLECTIVE BARGAINING AGREEMENT– Neither the provisions of any collective bargaining agreement, nor the failure by a union with whom the Contractor has a collective bargaining agreement to refer either minorities or women shall excuse the Contractor's obligations under these requirements, any rules, regulations, procedures and guidelines promulgated or established pursuant to Executive Order 21.

16. APPLICABILITY TO SUBCONTRACT – As per Section 312 of Executive Law 15-A the Contractor will physically include this document, Equal Employment Opportunity Requirements, as part of every subcontract or purchase order unless exempted by rules, regulations, or orders of the Executive Director, pursuant to Executive Order 21, and such requirements shall be binding upon each subcontractor, service provider, or vendor. The Contractor will take such action with respect to any subcontract or purchase order as the Authority may direct as a means of enforcing such provisions, including sanctions for noncompliance; PROVIDED, HOWEVER, that in the event the Contractor becomes involved in or is threatened with litigation with a subcontractor or vendor as a result of any provision or direction issued pursuant to these requirements or by the Authority, the Contractor may request the State of New York to enter into such litigation or dispute to protect the interests of the State of New York.

EQUAL EMPLOYMENT OPPORTUNITY REQUIREMENTS – STATE

17. **EQUAL EMPLOYMENT OPPORTUNITY OFFICER –** The Contractor will designate and make known to the Department of Equal Employment Opportunity Officer (EEO Officer) who will have the responsibility for and must be capable of effectively administering and promoting an active Contractor program of equal employment opportunity and who must be assigned adequate authority and responsibility to do so.

18. **COMPLAINTS OF ALLEGED DISCRIMINATION/SEXUAL HARASSMENT –** The Contractor will promptly investigate all complaints of alleged discrimination/sexual harassment made to the Contractor in connection with his/her obligations under this contract, will attempt to resolve such complaints, and will take appropriate corrective action within a reasonable time. If the investigation indicates that the discrimination/sexual harassment may affect persons other that the complainant, such corrective action shall include such other persons. Upon completion of each investigation, the Contractor will inform every complainant of all of his or her avenues of appeal. (Division of Human Rights, Equal Employment Opportunity Commission).

    The Contractor shall inform the Compliance Unit (within 24 hours) in writing of any formal or informal, complaint, incident or any issue of discrimination/sexual harassment. Results of investigation must be submitted to the Compliance Unit within ten (10) days of the complaint.

EMPLOYMENT GOALS FOR MINORITY AND WOMEN PARTICIPATION BY COUNTY

COUNTY	MINORITY %	WOMEN %
Albany	6.56	4.67
Alleghany	1.00	5.08
Bronx	56.41	4.72
Broome	4.15	6.24
Cattaraugus	5.00	3.76
Cayuga	1.38	4.47
Chautauqua	3.47	4.83
Chemung	3.44	4.96
Chenango	2.07	6.67
Clinton	1.22	5.63
Columbia	3.81	3.16
Cortland	2.05	6.89
Delaware	2.36	5.59
Dutchess	7.63	3.24
Erie	9.66	3.32
Essex	0.33	5.33
Franklin	6.77	5.69
Fulton	1.00	4.07
Genesee	5.47	5.18
Green	2.88	4.09
Hamilton	0.76	6.11
Herkimer	1.00	4.22
Jefferson	2.12	3.65
Kings	56.41	4.72
Lewis	0.87	4.82
Livingston	1.54	4.14
Madison	1.52	4.52
Monroe	14.20	5.81
Montgomery	2.39	3.74
Nassau	16.09	3.24
New York	56.41	4.72

EQUAL EMPLOYMENT OPPORTUNITY REQUIREMENTS – STATE

EMPLOYMENT GOALS FOR MINORITY AND WOMEN PARTICIPATION BY COUNTY

COUNTY	MINORITY %	WOMEN %
Niagara	6.00	4.12
Oneida	3.75	3.98
Onondaga	8.27	5.36
Ontario	1.62	3.79
Orange	10.00	3.46
Orleans	5.74	4.14
Oswego	1.25	4.03
Otsego	0.86	4.91
Putnam	2.42	2.79
Queens	56.41	4.72
Rensselaer	3.46	3.01
Richmond	12.81	2.46
Rockland	18.37	3.80
St. Lawrence	1.78	4.86
Saratoga	1.10	5.25
Schenectady	6.05	2.85
Schoharie	1.36	2.99
Schuyler	0.49	4.67
Seneca	2.22	5.45
Steuben	1.39	4.84
Suffolk	11.73	4.10
Sullivan	8.16	3.60
Tioga	0.53	8.90
Tompkins	4.19	4.99
Ulster	5.93	4.29
Warren	2.13	3.41
Washington	1.91	3.56
Wayne	3.66	4.77
Westchester	24.50	3.38
Wyoming	0.33	4.30
Yates	1.67	2.68

TRAINING SPECIAL PROVISIONS – STATE FUNDED

This work shall consist of the employment and meaningful and effective training of minority and women in NYS Thruway Authority approved training programs leading to their qualification as journeyworkers in the skilled trades required in highway construction. This Training Special Provision supplements the Equal Employment Opportunity requirements included elsewhere in this Proposal entitled "Equal Employment Opportunity (EEO) Requirements". Each of the fore-going prescribed specific percentage goals for utilization of minorities and women in the performance of work for the geographic location of the contract.

GENERAL: The primary objective of this Training Special Provision is to provide training opportunities to minorities and women in construction trades for two purposes:

1. To maintain a pool of qualified minorities and women to replace those journeyworkers who, in the natural course of events, will leave the workforce; and

2. To provide minorities and women as indentured apprentices or trainees in those geographic areas where shortages in minorities and women journeyworkers are recognized because of the Contractor's inability to meet the EEO goals set fourth in this contract.

Each contract which contains this Training Special Provision shall require the training of at least one minority or woman indentured apprentice or trainee. Such individual shall be approved by the Authority. Other then this initial training obligation, to be undertaken and provided by the Contractor, no additional training obligations will exist under this Training Special Provision unless the goals for minority and women employment and training in the skilled workforce (exclusive of laborers) are not continuously met on the contract and generally distributed amongst the trades. In the five counties of New York City, the goals specified for each trade are applicable and must be met. Whenever the goals are not met, additional minorities and/or women indentured apprentices and/or trainees will be assigned or approved in numbers necessary to meet the goals. Data necessary to determine if goals are being met will be provided on Contractor and Subcontractor Employment Utilization Reports (Form TA-1017-9). The data will be verified by the visual observance of the Project Engineer, or designated project inspectors, and hours of employment reported on Contractor or Subcontractor certified weekly payrolls.

The number of minorities and women indentured apprentices and trainees required to be trained under this item shall not exceed 12% of the total journeyworker workforce on the contract, i.e. no more than 1 in of the skilled workforce is required to be a minority or woman indentured apprentice or trainee. This limitation applies regardless of minority and women representation in the trades. However, this limit on required training in no way absolves the Contractor of the responsibility to comply with the EEO requirements.

PRE-AWARD MEETING: Before the Contractor will be allowed to begin work, the Contractor shall attend a Pre-award Meeting and shall submit for Authority use and acceptance, a Workforce and Training Utilization Schedule (TA-1024) which shall be correlated to the Contractor's contract work schedule. The Schedule shall include at least the following information:

1. A work schedule for the entire contract,

2. An estimate of the work force required to conform to the work schedule on a monthly basis including an estimate of the workforce in each trade and/or work classification projected to be used including Subcontractors,

3. Separate estimates of the number of minorities and women indentured apprentices or trainees that would be required in each skilled trade to meet the contract EEO employment goals for that trade assuming no minorities or women journeyworkers in the workforce,

4. The proposed training programs to be used and the starting dates for training in each trade and/or work classification,

5. An estimate of the availability of minorities and women journeyworkers in numbers sufficient to meet the EEO contract goals, and

6. Any proposal by the Contractor to use trainees or indentured apprentices to make up for anticipated EEO goal shortfalls. Such proposals shall include the name and craft of any individual proposed by the Contractor as the required trainee or indentured apprentice. In the case of an indentured apprentice, evidence of indentureship and registration of the approved apprenticeship program must be included.

No contract work may be undertaken until the Authority has accepted the Schedule. The Contractor shall submit a revised Workforce and Training Utilization Schedule at such times as major changes in the contract work schedule occur which substantially affect the previously submitted schedule.

RECRUITMENT: Although the training requirements of this Training Special Provision are not intended, and shall not be used to discriminate against any applicant for training, whether a member of a protected class or not, it is recognized that non-minority males have traditionally been and continue to be trained, either formally or on-the-job in an informal manner, for work in the trades utilized in construction work. Therefore, until such time that representative numbers of minorities and women complete training and their utilization as journeyworkers is demonstrated to the extent of the participation goals as set forth in the Authority's construction contract, training required under this Training Special Provisions will be primarily limited to minorities and women. Thus, the Contractor shall demonstrate compliance with the intent of this Training Special Provision by affording the Authority the opportunity to:

1. First, approve the use of a minority or woman indentured apprentice known to the Contractor through an existing Joint Apprenticeship Training program, or

2. Second, provide a partially trained minority or woman trainee who is currently enrolled in a New York State Department of Labor approved training program, or

3. Third, work cooperatively with the Contractor in recruitment of new minorities or women trainees, when needed.

In conformance with the foregoing, the Authority's Form TA-1018(Request for Personnel), should be submitted to the Authority's Affirmative Action Administrator identified to the Contractor at the Preconstruction Meeting. The Contractor shall allow reasonable time for the Authority's Compliance Specialist to ensure on-the-job orientation for approved apprentices or assigned trainees within their first month of employment.

WORK HISTORY: No individual shall be employed as a trainee in any trade and/or work classification in which such person has successfully completed a training course providing journeyworker status in the same trade or work classification, or in which such person has been gainfully employed as a journeyworker by virtue of informal on-the-job training. Detection of individuals in the above categories may be accomplished by including appropriate questions on employee application forms, inquiries to the Authority's Compliance Specialist, checking personal references, or by other suitable means. Regardless of the method used, the Contractor shall document the finding for each indentured apprentice or trainee provided training under this requirement. A copy of the finding shall be given to the Authority's Compliance Specialist. In the case of indentured apprentices, evidence of indentureship in a registered approved apprenticeship program shall also be submitted.

SUBCONTRACTING: In the event the Contractor subcontracts a portion of the contract work, the Contractor shall ensure the requirements of this Training Special Provision are physically incorporated in such subcontracts to ensure the workforce utilization by the Subcontractor meets the goals for minorities and women employment and training, either independently or in combination with the prime Contractor's workforce. The Contractor must determine the hours of training, if any, and in which trade or work classification, minorities or women indentured apprentices or trainees are to be trained by the Subcontractor(s). However, the Contractor shall retain the primary responsibility for meeting the training requirements of this Training Special Provision. Subcontractors are herewith advised that disregard of these requirements may result in the Authority either rescinding approval of or disapproving their use on subsequent Authority contracts.

TRAINING PROGRAMS: The minimum length, type of training, and rate of pay for the trade or the work classification of the trade will be specified in the training program approved or sanctioned by the New York State Department of Labor.

Where training is to be provided under this Training Special Provision, the Contractor shall obtain acceptance or approval of the training program to be used, and the starting time for training, prior to commencing training. The Contractor shall provide on-the-job training directed toward developing journeyworkers in the trade, or work classification(s) of the trade, involved. To the extent the work involved on the contract permits, such training should include all phases and facets of a trade, or work classification of a trade, to satisfy usual construction industry requirements for continued or future employment therein.

It is the intent of this Training Special Provision that training will be provided in construction trades rather than clerical type positions. Training may be permitted, in unique circumstances, in lower level management positions such as office engineers, where the training is oriented toward construction related activities. Some off-site training is permissible as long as the training is an integral part of an approved training program and does not comprise a significant part of an overall training program. Both off-site and lower level management training are subject to the Authority's approval.

TRAINEE WAGES: An employee on any New York State Public Works Contract must be paid the full journeyperson prevailing wage unless such employee is individually registered in an approved and registered New York State Department of Labor Apprenticeship Program.

It is the responsibility of the Contractor to ascertain the status of any employee utilized to satisfy the trainee requirements under this contract, and to ensure that all New York State Department of Labor apprenticeship requirements are met.

Apprentices shall be paid fringe benefits in accordance with the provisions of the apprenticeship program. If the apprenticeship program does not specify fringe benefits, apprentices must be paid the full amount of fringe benefits listed on the wage determination for the applicable classification. Trainees shall be paid fringe benefits in accordance with the provisions of the trainee program. If the trainee program does not mention fringe benefits, trainees shall be paid the full amount of fringe benefits listed on the wage determination unless the Administrator of the Wage and Hour Division determines that there is an apprenticeship program associated with the corresponding journeyworker wage rate on the wage determination which provides for less than full benefits for apprentices.

DURATION OF TRAINING: Once an indentured apprentice is approved or a trainee is assigned to the contract under the Training Special Provision, that individual shall be trained in the designed trade throughout the duration of the contract whenever such trade is in use on the contract until the trainee or apprentice has completed the approved training program. Where training is provided under a multiphase apprenticeship or training program, it is expected that training will be provided continually through all phases to the extent that opportunities for such training exist in the work under contract. Upon satisfactory completion of a phase of training under a multiphase training program, if further appropriate and required training is not available and work in the work classification of the completed phase is available, the minority or woman indentured apprentice or trainee shall continue employment, and be compensated at the prevailing journeyworker wage rate for such work. Hours of employment as a journeyworker described above will not be credited toward training hours required by the approved training or apprenticeship program.

If an indentured apprentice or trainee is terminated before completion of the contract for any reason other than seasonal lay-off or completion of work in that trade, the Contractor shall hold a counseling session with the Authority's Compliance Specialist and the individual to explain the reasons for termination. Documentation that the counseling session was held and the reasons for termination shall be given to the Authority's Compliance Specialist.

REQUIRED RECORDS: The Contractor shall provide each minority or woman trained under this provision with a certification showing the type and length of training satisfactorily completed. In addition, the Contractor shall keep records on the job sit indicating the nature and hours of training provided to each trainee or indentured apprentice and furnish weekly reports documenting performance under this Training Special Provision to the Project Engineer.

No measurement will be made of training provided to indentured apprentices or trainees for whom no work history has been provided to the Project Engineer. In addition, no measurement will be made of training provided to apprentices for whom no evidence of indentureship in a registered apprenticeship program has been provided to the Project Engineer.

NO PAYMENT FOR TRAINING: No payment will be made for the training required of the Contractor under this Training Special Provision. The required training is labor cost which is included in the lump sum bid by the Contractor for the items of work comprising the contract.

(1) Journeyworker means a person who is capable of performing all the duties within a trade or a given work classification of a trade.

TRAINEE/APPRENTICESHIP NOTICE

Notwithstanding any of the provisions under the contract section entitled TRAINING SPECIAL PROVISION, especially subsections entitled Training Programs and Trainee Wages, dealing with approved and/or sanctioned programs and graduated percentage wages, the Contractor is advised that all requirements for Apprenticeships (including all manner and form of traineeships and skill programs) are under the exclusive jurisdiction of the New York State Department of Labor, Job Service and Training Division, Albany Apprentice Training Central Office, Bldg. 12, Room 586, State Office Building Campus, Albany, NY 12240.

An employee on any New York State Public Works Contract must be paid the full, journeyperson prevailing wage unless such employee is individually registered in an approved and registered NYS Department of Labor Apprenticeship Program.

This law is applicable even on Federal-aided contracts as long as any State money is involved, and even if an employee might otherwise be acceptable as a trainee in an approved and sanctioned New York State Department of Transportation and/or Federal Highway Administration training program.

It is the responsibility of the Contractor to ascertain the status of any employee utilized to satisfy the trainee requirements under this contract, and to ensure that all New York State Department of Labor Apprenticeship requirements are met.

It is the responsibility of the Contractor to ascertain the status of any employee utilized to satisfy the trainee requirements under this contract, and to ensure that all New York State Department of Labor Apprenticeship requirements are met.

Unless such employees are individually registered in a New York State Department of Labor approved and registered Apprenticeship Program, they must be paid the full, prevailing journeyperson wage, not the graduated, trainee wage set forth in the section TRAINING SPECIAL PROVISIONS of the contract.

NON-FA AFFIRMATIVE ACTION REQUIREMENTS

Special Equal Employment Opportunity Responsibilities

1. GENERAL

a. Equal employment opportunity requirements that take affirmative action to assure equal employment opportunity as required by Executive Order 11246 and Executive Order 11375 are set forth in Required Contract Provisions (Form PR-1273 or PR-1316, as appropriate) and these Special Provisions which are imposed pursuant to Section 140 of Title 23, U.S.C., as established by Section 22 of the Federal-Aid Highway Act of 1968. The requirements set forth in these Special Provisions shall constitute the specific affirmative action requirements for project activities under this contract and supplement the equal employment opportunity requirements set forth in the Required Contract Provisions.

b. The Contractor will work with the New York State Thruway Authority, New York State Department of Transportation and the Federal Government in carrying out equal employment opportunity obligations and in their review of his/her activities under the contract.

2. EQUAL EMPLOYMENT OPPORTUNITY POLICY

The Contractor will accept as operating policy the following statement which is designed to further the provision of equal opportunity to all persons without regard to their race, color, religion, sex, or national origin, and to promote the full realization of equal employment opportunity through a positive continuing program.

It is the policy of this Company to assure that applicants are employed, and that employees are treated during employment, without regard to their race, religion, sex, color, or national origin. Such action shall include: employment, upgrading, demotion, or transfer; recruitment or recruitment advertising; layoff or termination; rates of pay or other forms of compensation; and selection for training, including apprenticeship, pre-apprenticeship and/or on-the-job training.

3. EQUAL EMPLOYMENT OPPORTUNITY OFFICER

The Contractor will designate and make known to the New York State Thruway Authority contracting officers an Equal Employment Opportunity Officer (hereinafter referred to as the EEO Officer) who will have the responsibility for and must be capable of effectively administering and promoting an active Contractor program of equal employment opportunity and who must be assigned adequate authority and responsibility to do so.

4. DISSEMINATION OF POLICY

a. All members of the Contractor's staff who are authorized to hire, supervise, promote and discharge employees, or who recommend such action, or who are substantially involved in such action, will be made fully cognizant of, and will implement, the Contractor's equal employment opportunity policy and contractual responsibilities to provide equal employment opportunity in each grade and classification of employment. To insure that the above agreement will be met, the following actions will be taken as a minimum:

(1) Periodic meetings of supervisory and personnel office employees will be conducted before the start of work and then not less than once every six months, at which time the Contractor's equal employment opportunity policy and its implementation will be reviewed and explained. The meetings will be conducted by the EEO Officer or other knowledgeable company official.

(2) All new supervisory or personnel office employees will be given a thorough indoctrination by the EEO Officer or other knowledgeable company official covering all major aspects of the Contractor's equal employment opportunity obligations within thirty days following their reporting for duty with the Contractor.

(3) All personnel who are engaged in direct recruitment for the project will be instructed by the EEO Officer or appropriate company official in the Contractor's procedures for locating and hiring minority group employees.

b. In order to make the Contractor's equal employment opportunity policy known to all employees, prospective employees and potential sources of employees, i.e., schools, employment agencies, labor units (where appropriate), college placement officers, etc., the Contractor will take the following actions:

(1) Notices and posters setting forth the Contractor's equal employment opportunity policy will be placed in areas readily accessible to employees, applicants for employment and potential employees.

(2) The Contractor's equal employment opportunity policy and the procedures to implement such policy will be brought to the attention of employees by means of meetings, employee handbooks, or other appropriate means.

5. **RECRUITMENT**

a. When advertising for employees, the Contractor will include in all advertisements for employees the notation: "An Equal Opportunity Employer." All such advertisements will be published in newspapers or other publications having a large circulation among minority groups in the area from which the project work force would normally be derived.

b. The Contractor will, unless precluded by a valid bargaining agreement, conduct systematic and direct recruitment through public and private employee referral sources likely to yield qualified minority group applicants, including, but not limited to, State employment agencies, schools, colleges and minority group organizations. To meet this requirement, the Contractor's EEO Officer will identify sources of potential minority group employees, and establish with such identified sources procedures whereby minority group applicants may be referred to the Contractor for employment consideration.

In the event the Contractor has a valid bargaining agreement providing for exclusive hiring hall referrals, the Contractor is expected to observe the provisions of that agreement to the extent that the system permits the Contractor's compliance with equal employment opportunity contract provisions. (The U.S. Department of Labor has held that where implementation of such agreements have the effect of discriminating against minorities or women, or obligates the Contractor to do the same, such implementation violates Executive Order 11246, as amended.)

c. The Contractor will encourage present employees to refer minority group applicants for employment by posting appropriate notices or bulletins in areas accessible to all such employees. In addition, information and procedures with regard to referring minority group applicants will be discussed with employees.

NON-FA AFFIRMATIVE ACTION REQUIREMENTS

6. PERSONNEL ACTIONS

Wages, working conditions, and employee benefits shall be established and administered, and personnel actions of every type, including hiring, upgrading, promotion, transfer, demotion, layoff, and termination, shall be taken without regard to race, color, religion, sex, or national origin. The following procedures shall be followed:

a. The Contractor will conduct periodic inspections of project sites to insure that working conditions and employee facilities do not indicate discriminatory treatment of project site personnel.

b. The Contractor will periodically evaluate the spread of wages paid within each classification to determine any evidence of discriminatory practices.

c. The Contractor will periodically review selected personnel actions in depth to determine whether there is evidence of discrimination. When evidence is found, the Contractor will promptly take corrective action. If the review indicates that the discrimination may extend beyond the actions reviewed, such corrective action shall include all affected persons.

d. The Contractor will promptly investigate all complaints of alleged discrimination made to the Contractor in connection with obligations under this contract, will attempt to resolve such complaints, and will take appropriate corrective action within a reasonable time. If the investigation indicates that the discrimination may affect persons other than the complainant, such corrective action shall include such other persons. Upon completion of each investigation, the Contractor will inform every complainant of all of his/her avenues of appeal.

7. TRAINING AND PROMOTION

a. The Contractor will assist in locating, qualifying and increasing the skills of minority group and women employees, and applicants for employment.

b. Consistent with the Contractor's work force requirements and as permissible under Federal and State regulations, the Contractor shall make full use of training programs; i.e., apprenticeship and on-the-job training programs for the geographical area of contract performance. Where feasible, 25 percent of apprentices or trainees in each occupation shall be in their first year of apprenticeship or training. In the event the Training Special Provision is provided under this contract, this subparagraph is superseded thereby.

c. The Contractor will advise employees and applicants for employment of available training programs and entrance requirements for each.

d. The Contractor will periodically review the training and promotion potential of minority groups and women employees and will encourage eligible employees to apply for such training and promotion.

8. UNIONS

If the Contractor relies in whole or in part upon unions as a source of employees, the Contractor will use his/her best efforts to obtain the cooperation of such unions to increase opportunities for minority groups and women within the unions, and to effect referrals by such unions of minority and female employees. Actions by the Contractor, either directly or through a Contractor's association acting as agent, will include the procedures set forth below:

NON-FA AFFIRMATIVE ACTION REQUIREMENTS

a. The Contractor will use his/her best efforts to develop, in cooperation with the unions, joint training programs aimed toward qualifying more minority group members and women for membership in the unions and increasing the skills of minority group employees and women so that they may qualify for higher paying employment.

b. The Contractor will use his/her best efforts to incorporate an equal employment opportunity clause into each union agreement to the end that such union will be contractually bound to refer applicants without regard to their race, color, religion, sex or national origin.

c. The Contractor is to obtain information as to the referral practices and policies of the labor union except that to the extent such information is within the exclusive possession of the labor union or such labor union refuses to furnish such information to the Contractor, the Contractor shall so certify to the New York State Thruway Authority and shall set forth what efforts have been made to obtain such information.

d. In the event the union is unable to provide the Contractor with a reasonable flow of minority and women referrals within the time limit set forth in the collective bargaining agreement, the Contractor will, through independent recruitment efforts, fill the employment vacancies without regard to race, color, religion, sex, or national origin, making full efforts to obtain qualified and/or qualifiable minority group persons and women. (The U.S. Department of Labor has held that it shall be no excuse that the union with which the Contractor has a collective bargaining agreement providing for exclusive referral failed to refer minority employees.) In the event the union referral practice prevents the Contractor from meeting the obligations pursuant to Executive Order 11246, as amended, and these special provisions, such Contractor shall immediately notify the New York State Thruway Authority.

9. SUBCONTRACTING

a. The Contractor will use his/her best efforts to solicit bids from and to utilize minority group subcontractors or subcontractors with meaningful minority group and female representation among their employees. Contractors shall obtain lists of minority-owned construction firms from Empire State Development, Division of Minority and Women Business Development.

b. The Contractor will use his/her best efforts to ensure Subcontractor compliance with their equal employment opportunity obligations.

10. RECORDS AND REPORTS

a. The Contractor will keep such records as are necessary to determine compliance with the Contractor's equal employment opportunity obligations. The records kept by the Contractor will be designed to indicate:

(1) The number of minority and non-minority group members and women employed in each work classification on the project.

(2) The progress and efforts being made in cooperation with unions to increase employment opportunities for minorities and women (applicable only to Contractors who rely in whole or in part on unions as a source of their work force).

(3) The progress and efforts being made in locating, hiring, training, qualifying, and upgrading minority and female employees.

NON-FA AFFIRMATIVE ACTION REQUIREMENTS

(4) The progress and efforts being made in securing the services of minority group Subcontractors with meaningful minority and female representation among their employees.

b. All such records must be retained for a period of three years following completion of the contract work and shall be available at reasonable times and places for inspection by authorized representatives of the New York State Thruway Authority, New York State Department of Transportation and the Federal Highway Administration.

c. The Contractor will submit to the New York State Thruway Authority, a monthly report for the first three months after construction begins, thereafter upon request, and each month of July for the duration of the project indicating the number of minority, women and non-minority group employees currently engaged in each work classification required by the contract work. This information is to be reported on Form PR-1391, Federal-Aid Highway Construction Contractor's Monthly EEO Report. If on-the-job training is being required by "Training Special Provisions," the Contractor will be required to furnish Form FHWA-1409, Federal-Aid Highway Construction Contractor's Quarterly Training Report.

PROGRESS PAYMENTS - OEOC REPORTS

Processing of progress payments is contingent upon Contractor documentation of compliance with **all** contract requirements, including EEO/MWBE Program (Equal Employment Opportunity/Minority and Women Business Enterprise Program) reports, in accordance with the brochure entitled "Minority and Women Business Enterprise Program, Information on Completing Program Reports", which is sent to all low bidders by the NYSTA Office of Contracts and Construction Management.

Forms listed below may be required and shall cover the period since the last reporting period. Specific forms and schedule will be stipulated at the EEO/MWBE Program pre-award meeting.

TA-W1017-9 Monthly Employment Utilization
TA-W1023-9 Payments to D/M/WBE Subcontracting Firms
TA-W1046-9 Weekly Training Progress Report

In addition, the following shall reflect up-to-date status:

TA-W1022-9 Utilization Plan for All Subcontractors
TA-W1024-9 Workforce and Training Utilization Schedule
TA-W1041-9 Training Report
TA-W1064-9 Construction Contractors Annual EEO Report

TA-W1022-9 (02/2016)

New York State Thruway Authority • New York State Canal Corporation
Office of Construction Management - Compliance Unit
P.O. Box 189
Albany, NY 12201-0189

UTILIZATION PLAN FOR ALL SUBCONTRACTORS

Purpose: This form is completed by the contractor for the utilization of all subcontractors, suppliers and trucking firms.

INSTRUCTIONS: Complete form and submit within 10 days after bid opening.

Contractor Name and Address	Federal ID No.	Contract Numbers TA No. D No.

List all Subcontractors, Suppliers and Trucking Firms	Certification Status	Submission	Items of Work, Services, or Supplies to be Provided	Agreement Amount
Name Address Phone No. Federal ID No.				$
Name Address Phone No. Federal ID No.				$
Name Address Phone No. Federal ID No.				$
Name Address Phone No. Federal ID No.				$
Name Address Phone No. Federal ID No.				$
Name Address Phone No. Federal ID No.				$

Prepared by:

Signature

Phone No.

Title

Date Submitted

Sub Total From Page 2 $

Grand Total $

TA-W1022-9 (02/2016)

UTILIZATION PLAN FOR ALL SUBCONTRACTORS

Page _____ of _____

List all Subcontractors, Suppliers and Trucking Firms	Certification Status	Submission	Items of Work, Services or Supplies to be Provided	Agreement Amount
Name Address Phone No. Federal ID No.				$
Name Address Phone No. Federal ID No.				$
Name Address Phone No. Federal ID No.				$
Name Address Phone No. Federal ID No.				$
Name Address Phone No. Federal ID No.				$
Name Address Phone No. Federal ID No.				$
Name Address Phone No. Federal ID No.				$
Name Address Phone No. Federal ID No.				$
Compliance Unit Comments:				Sub Total $

INSTRUCTIONS FOR THE MANUAL COMPLETION OF THE EMPLOYMENT UTILIZATION REPORT – TA-1017-9

PURPOSE

The Employment Utilization Report is prepared by contractors and subcontractors to document their performance in attempting to meet the goals for equal employment opportunity included in the contract. The report covers all hourly workers, including crew chiefs, assigned to the construction project; it does not cover salaried personnel such as superintendents. The completed reports are used by the Thruway to monitor the contractor's and subcontractor's compliance with the contract's equal employment opportunity requirements.

SUBMISSION

The Employment Utilization Report is to be completed by both prime and subcontractors and signed by the designated EEO Officer or authorized representative of the Contractor or Subcontractors. The prime contractor shall: complete a report for its own workforce, and prepare a summary report for the entire combined contract workforce. All the reports are to be submitted to the Engineer-In-Charge (EIC) each calendar month during the term of the contract. They shall include the total work hours for all employees in each trade or work category for all payrolls completed in the entire reporting period. This report is required by Article 15-A of the Executive Law of New York State Section 312, and 23 U.S.C., Section 140(a).

GENERAL

1. Check YES or NO as appropriate to indicate whether or not this particular TA-1017-9 filing will be your last TA-1017-9 filing for the entire contract.
2. Contract Number
3. Name of County or Counties in which the contract is located.
4. Enter Zip Code
5. Minority and Female Goals for the County of the project address from the contract EEO requirements.
6. The Month and Year covered by the report.
7. Prime Contractor's Name and Federal Employer Identification Number, only if form is being completed by the Contractor.
8. Date Work Began: Enter the month and year work began on this contract.
9. Work Completed to Date: Estimate the percent of contract work completed at this time.

JOB OR TRADE CATEGORIES

There are 9 standard job or trade categories printed on the TA-1017-9. They include the trades commonly used in highway and bridge construction. These categories are intended to be general in nature and may include several job titles, depending on local custom. (For example, all laborers whether "skilled" or "unskilled" are to be included in the laborer category; journeyworker mechanics employed to operate equipment on the job site such as compressors would be included in the equipment operator category.) In some rare cases, trades other than those identified on the TA-1017-9 may be required to perform the contract work; for example a plumber might be utilized in the construction of a rest area. All work performed by trades other than those printed on the form should be combined in the "Other" category. Work level designations of Journeyworker (J), Apprentice (A), or Trainee (T), are included as separate entries for each standard job category. All entries of hours worked must be recorded opposite the appropriate work level for those categories. No separate identification of work level is required for "other" crafts or job categories. Crew chiefs and other hourly supervisors should be counted as journeyworkers in their appropriate job or trade categories.

WORK HOURS OF EMPLOYMENT (This Reporting Period)

10-14 Report the work hours of employment provided in each Job or Trade category during the reporting month. Include all employment covered by payrolls issued during the reporting month. Unless otherwise noted, the Hours of Employment provided to Males (M) and Females (F) are reported separately. Where separate work designations

are shown for a single trade, i.e., work designations are shown for a single trade, i.e., report these work hours accordingly.

10. Total hours of work for all employees regardless of their ethnicity.
11. Black (not of Hispanic origin): All persons having origins in any of the Black racial groups.
12. Hispanic: All persons of Mexican, Puerto Rican, Dominican, Cuban, Central or South American descent of either Indian or Hispanic origin, regardless of race.
13. Asian or Pacific Islander.
14. Native American or Alaskan Native.
15. Minority Percentage: the sum of all minority male employment for a category divided by the total work force employment for that category, i.e. (11M + 12M + 13M + 14M) + (10M + 10F). Journeyworkers, Apprentices, and Trainees are combined Apprentices, and Trainees are combined when computing this percentage.

16. Female Percentage: the female employment of all employees for a category divided by the total employment of all employees for that category, i.e. (10F) + (10M + 10F). Journeyworkers, Apprentices, and Trainees are combined when computing this percentage.

NUMBER OF EMPLOYEES

17-18 Record the number of people employed during the reporting period. The numbers of Male (M) and Female (F) employees in each column are reported separately.

17. The total number of people employed regardless of ethnicity.
18. The total number of minority persons employed.

TOTAL WORK HOURS OF EMPLOYMENT TO DATE (Cumulative)

This section provides a current total of the employment provided throughout the life of the contract to date. The total employment to date is calculated by adding the work hours of employment reported this period to the previous month's reported total work hours of employment to date.

19. Total hours of work for all employees regardless of their ethnicity (cumulative - include non-minorities minorities).

20-23 The sum of the corresponding entry for EMPLOYMENT THIS REPORTING PERIOD and the previous period's TOTAL WORK HOURS OF EMPLOYMENT TO DATE for each combination of job category, ethnicity, and sex.

24. Minority Percentage = (20M + 21M + 22M + 23M) + (19M + 19F).
25. Female Percentage = (19F) + (19M + 19F)

GRAND TOTAL

26. Enter the cumulative total of each column.

OFFICIAL OF PRIME CONTRACTOR/SUBCONTRACTOR

27. Signature and Title of the company official completing the report.
28. Date signed.

TA-W1017-9
(08/2014)

NEW YORK STATE THRUWAY AUTHORITY • CANAL CORPORATION

OFFICE OF CONSTRUCTION MANAGEMENT COMPLIANCE UNIT
MONTHLY EMPLOYMENT UTILIZATION

1. FINAL REPORT	2. CONTRACT TA #	3.D #	4. COUNTIES
○ YES ◉ NO			

5. CONTRACT GOALS %	MINORITY %	FEMALE %	6. REPORT (MONTH & YEAR) _____ / _____

7. CONTRACTOR NAME	SELECT REPORT TYPE BELOW
	○ PRIME ◉ COMPOSITE ○ SUBCONTRACTOR

8. PROJECT START DATE *(Month & Year)*	_____ / _____	9. Percent of Work Completed to Date:	

WORK HOURS OF EMPLOYMENT THIS MONTH

JOB OR TRADE CATEGORY JOURNEYWORKER, APPRENTICE, OR TRAINEE		10. TOTAL HOURS OF ALL EMPLOYEES BY TRADE (NON-MINORITIES & MINORITIES)		11. BLACK (NOT OF HISPANIC ORIGIN)		12. HISPANIC		13. ASIAN OR PACIFIC ISLANDERS		14. AMERICAN INDIAN OR ALASKAN NATIVE		15 MINORITY %	16. FEMALE %	17. TOTAL NUMBER OF EMPLOYEES		18. TOTAL # OF MINORITY EMPLOYEES	
		M	F	M	F	M	F	M	F	M	F			M	F	M	F
LABORER	J																
	A																
	T																
EQUIPMENT OPERATOR	J																
	A																
	T																
SURVEYOR	J																
	A																
	T																
TRUCK DRIVER	J																
	A																
	T																
IRON WORKER	J																
	A																
	T																
CARPENTER	J																
	A																
	T																
MASON	J																
	A																
	T																
PAINTER	J																
	A																
	T																
ELECTRICIAN	J																
	A																
	T																
OTHER																	
TOTAL																	

TOTAL WORK HOURS OF EMPLOYMENT TO DATE (Cumulative)

JOB OR TRADE CATEGORY JOURNEYWORKER, APPRENTICE, OR TRAINEE		19. TOTAL HOURS OF ALL EMPLOYEES BY TRADE (NON-MINORITIES & MINORITIES)		20. BLACK (NOT OF HISPANIC ORIGIN)		21. HISPANIC		22. ASIAN OR PACIFIC ISLANDERS		23. AMERICAN INDIAN OR ALASKAN NATIVE		24. MINORITY %	25. FEMALE %
		M	F	M	F	M	F	M	F	M	F		
LABORER	J												
	A												
	T												
EQUIPMENT OPERATOR	J												
	A												
	T												
SURVEYOR	J												
	A												
	T												
TRUCK DRIVER	J												
	A												
	T												
IRON WORKER	J												
	A												
	T												
CARPENTER	J												
	A												
	T												
MASON	J												
	A												
	T												
PAINTER	J												
	A												
	T												
ELECTRICIAN	J												
	A												
	T												
OTHER													
26. GRAND TOTAL													

27. Official of Prime Contractor/ Subcontractor *(Title and Signature)*	28. Date Signed
29. Reviewed by Thruway Project Engineer *(Title and Signature)*	30. Date Approved

TA-W1023-9 (09/2014)

New York State Thruway Authority/New York State Canal Corporation
Office of Construction Management - Compliance Unit
P.O. Box 189, Albany, NY 12201-0189

Page of

DISADVANTAGED/MINORITY/WOMEN'S BUSINESS ENTERPRISE PROGRAM

PAYMENTS TO D/M/WBE SUBCONTRACTING FIRMS

***Purpose*:** The subcontractors/suppliers listed below are certified D/M/WBEs. Payments made are in conjunction with the UTILIZATION PLAN FOR ALL SUBCONTRACTORS (TA-W1022-9).

INSTRUCTIONS: Report is due the 15th of the month following the month of work. Zero payment reports are required. If no payments were made during the month, check the "No Payments" box.

MONTH/YEAR REPORTING

CONTRACTOR:	CONTRACT TA#:	CONTRACT D#:	% OF OVERALL WORK COMPLETED TO DATE: (Based on Dollars) %

LIST ALL D/M/WBE SUBCONTRACTORS/SUPPLIERS		ORIGINAL AGREEMENT AMOUNT	PREVIOUS PAYMENTS	PAYMENTS THIS MONTH ☐ No Payments	TOTAL PAYMENTS TO DATE	PERCENTAGE OF WORK COMPLETED TO DATE (Based on Dollars)
NAME: FEDERAL ID#:						
NAME: FEDERAL ID#:						
NAME: FEDERAL ID#:						
NAME: FEDERAL ID#:						
NAME: FEDERAL ID#:						
NAME: FEDERAL ID#:						
NAME: FEDERAL ID#:						
NAME: FEDERAL ID#:						
NAME: FEDERAL ID#:						
NAME: FEDERAL ID#:						
GRAND TOTAL AMOUNTS FOR ALL D/M/WBE SUBCONTRACTORS/SUPPLIERS						

PREPARED BY SIGNATURE:	DATE:

STATE
WAGE RATE
INFORMATION

WAGE RATES

The New York State Thruway Authority does not represent or warrant that the accompanying schedule of wages with the classification of workmen, mechanics and laborers, as required by Section 220 of the Labor Law, is complete and it reserves the right to revise such schedule when required.

In the event that revisions are made before the letting date, an amendment will be issued by the Department of purchasers of plans. In the event that the current wage rate schedule should expire before the contract for this project becomes effective the said wage rate schedule will be recertified and the Contractor will be bound by such revised schedule as recertified.

Labor classifications not appearing on this rate sheet can be used only with the consent of the Chief Engineer of the Authority and then the rate to be paid will be given by the Chief Engineer of the Authority after consulting with the State Department of Labor.

All requests for minimum wage rates for additional occupations shall be directed through the Chief Engineer, Thruway Authority.

By legislation effective August 9, 1975, if the prevailing rate of wages or the prevailing practices for supplements as determined by the State Labor Department changes after the contract is let, the Thruway Authority shall request of the State Labor Department a redetermination of the schedules of wages and supplements and such revised wage rates and supplements shall be annexed to and form a part of the contract for the work. The prevailing wage rates and supplemental benefits to be paid are those in effect at the time the work is being performed. The bidder shall take into account in his bid prices all changes in wage rates and supplements that may be forthcoming during the time the contract is in force.

The bidder shall take into account in his bid prices all changes in wage rates and supplements that may be forthcoming during the time the contract is in force.

Pursuant to Section 220-A of the New York State Labor law, the prime Contractor must provide each approved subcontractor with a copy of the schedule of wages and any supplements as specified in this Contract.

The prime Contractor must immediately obtain from each approved subcontractor a certification (TA-44105) of their receipt of, and agreement to pay the applicable prevailing wages as specified in this contract. The prime Contractor shall retain all Subcontractor certifications and provide these certifications to the Authority prior to the processing of the final payment.

The prime Contractor must submit an affidavit (TA-44115) verifying the proper payment of wages to its own employees prior to the processing of the final payment. All completed certifications and affidavits must be originals and be properly signed and notarized.

SPECIAL NOTICE TO BIDDERS IN RELATION TO OVERTIME DISPENSATION

All bidders, in submitting their bids, should base their bids and work progression on the assumption that Overtime Dispensation pursuant to Article 8 of the New York State Labor Law, for any workmen, laborers and mechanics to work more than 8 hours in any one calendar day or more than five days in any one week will not be granted for any operation for the contract duration. Subsequent to award, where the contract documents have imposed specific scheduling and/or phasing requirements or where it is determined by the Authority to be in the best interest of the public, the Authority may process, for approval by the new York State Department of Labor, requests for Overtime Dispensation on certain specific operations and, in the event approval is granted, there shall be no adjustments therefore in any bid prices.

SPECIAL NOTE
STATE PREVAILING WAGE RATES

The Contractor shall ensure that workers are paid the appropriate wages and supplemental (fringe) benefits. Throughout the contract, the Contractor shall obtain and pay workers in accordance with periodic wage rate schedule updates from the NYS Department of Labor (NYSDOL). Wage rate amendments and supplements are available on the NYSDOL web site at **www.labor.ny.gov**. All changes or clarification of labor classification(s) and applicability of prevailing wage rates shall be obtained in writing from the Office of the Director, NYSDOL Bureau of Public Work.

The NYSDOL prevailing wage rate schedule for this contract has been determined and is available on the internet. The prevailing wage rate schedule is accessed by visiting the NYSDOL web site, navigating to the appropriate web page, and entering the Prevailing Rate Case No. (PRC#). The PRC# is provided on NYSDOL Form PW-200 included in this contract Proposal.

A copy of the project specific prevailing wage rate schedule will be provided to the successful bidder upon award of the contract. Upon written request, the schedule will be provided by the Thruway Authority to prospective bidders without internet access.

Andrew M. Cuomo, Governor

Roberta Reardon, Commissioner

NYS Thruway Authority

Tina Masi, Civil Engineer I
200 Southern Blvd
Albany NY 12209

Schedule Year	2016 through 2017
Date Requested	09/21/2016
PRC#	2016009628

Location	MP 100.8 - MP 109.3
Project ID#	D214482
Project Type	Safety Upgrades, Culvert Extensions, Drainage Improvements and Miscellaneous Work

PREVAILING WAGE SCHEDULE FOR ARTICLE 8 PUBLIC WORK PROJECT

Attached is the current schedule(s) of the prevailing wage rates and prevailing hourly supplements for the project referenced above. A unique Prevailing Wage Case Number (PRC#) has been assigned to the schedule(s) for your project.

The schedule is effective from July 2016 through June 2017. All updates, corrections, posted on the 1st business day of each month, and future copies of the annual determination are available on the Department's website www.labor.state.ny.us. Updated PDF copies of your schedule can be accessed by entering your assigned PRC# at the proper location on the website.

It is the responsibility of the contracting agency or its agent to annex and make part, the attached schedule, to the specifications for this project, when it is advertised for bids and /or to forward said schedules to the successful bidder(s), immediately upon receipt, in order to insure the proper payment of wages.

Please refer to the "General Provisions of Laws Covering Workers on Public Work Contracts" provided with this schedule, for the specific details relating to other responsibilities of the Department of Jurisdiction.

Upon completion or cancellation of this project, enter the required information and mail **OR** fax this form to the office shown at the bottom of this notice, **OR** fill out the electronic version via the NYSDOL website.

NOTICE OF COMPLETION / CANCELLATION OF PROJECT

Date Completed: _____ Date Cancelled: _____

Name & Title of Representative: _____

Phone: (518) 457-5589 Fax: (518) 485-1870
W. Averell Harriman State Office Campus, Bldg. 12, Room 130, Albany, NY 12240

General Provisions of Laws Covering Workers on Article 8 Public Work Contracts

Introduction

The Labor Law requires public work contractors and subcontractors to pay laborers, workers, or mechanics employed in the performance of a public work contract not less than the prevailing rate of wage and supplements (fringe benefits) in the locality where the work is performed.

Responsibilities of the Department of Jurisdiction

A Department of Jurisdiction (Contracting Agency) includes a state department, agency, board or commission: a county, city, town or village; a school district, board of education or board of cooperative educational services; a sewer, water, fire, improvement and other district corporation; a public benefit corporation; and a public authority awarding a public work contract.

The Department of Jurisdiction (Contracting Agency) awarding a public work contract MUST obtain a Prevailing Rate Schedule listing the hourly rates of wages and supplements due the workers to be employed on a public work project. This schedule may be obtained by completing and forwarding a "Request for wage and Supplement Information" form (PW 39) to the Bureau of Public Work. The Prevailing Rate Schedule MUST be included in the specifications for the contract to be awarded and is deemed part of the public work contract.

Upon the awarding of the contract, the law requires that the Department of Jurisdiction (Contracting Agency) furnish the following information to the Bureau: the name and address of the contractor, the date the contract was let and the approximate dollar value of the contract. To facilitate compliance with this provision of the Labor Law, a copy of the Department's "Notice of Contract Award" form (PW 16) is provided with the original Prevailing Rate Schedule.

The Department of Jurisdiction (Contracting Agency) is required to notify the Bureau of the completion or cancellation of any public work project. The Department's PW 200 form is provided for that purpose.

Both the PW 16 and PW 200 forms are available for completion online.

Hours

No laborer, worker, or mechanic in the employ of a contractor or subcontractor engaged in the performance of any public work project shall be permitted to work more than eight hours in any day or more than five days in any week, except in cases of extraordinary emergency. The contractor and the Department of Jurisdiction (Contracting Agency) may apply to the Bureau of Public Work for a dispensation permitting workers to work additional hours or days per week on a particular public work project.

There are very few exceptions to this rule. Complete information regarding these exceptions is available on the "4 Day / 10 Hour Work Schedule" form (PW 30R).

Wages and Supplements

The wages and supplements to be paid and/or provided to laborers, workers, and mechanics employed on a public work project shall be not less than those listed in the current Prevailing Rate Schedule for the locality where the work is performed. If a prime contractor on a public work project has not been provided with a Prevailing Rate Schedule, the contractor must notify the Department of Jurisdiction (Contracting Agency) who in turn must request an original Prevailing Rate Schedule form the Bureau of Public Work. Requests may be submitted by: mail to NYSDOL, Bureau of Public Work, State Office Bldg. Campus, Bldg. 12, Rm. 130, Albany, NY 12240; Fax to Bureau of Public Work (518) 485-1870; or electronically at the NYSDOL website www.labor.state.ny.us.

Upon receiving the original schedule, the Department of Jurisdiction (Contracting Agency) is REQUIRED to provide complete copies to all prime contractors who in turn MUST, by law, provide copies of all applicable county schedules to each subcontractor and obtain from each subcontractor, an affidavit certifying such schedules were received. If the original schedule expired, the contractor may obtain a copy of the new annual determination from the NYSDOL website www.labor.state.ny.us.

The Commissioner of Labor makes an annual determination of the prevailing rates. This determination is in effect from July 1st through June 30th of the following year. The annual determination is available on the NYSDOL website www.labor.state.ny.us.

Payrolls and Payroll Records

Every contractor and subcontractor MUST keep original payrolls or transcripts subscribed and affirmed as true under penalty of perjury. Payrolls must be maintained for at least three (3) years from the project's date of completion. At a minimum, payrolls must show the following information for each person employed on a public work project: Name, Address, Last 4 Digits of Social Security Number, Classification(s) in which the worker was employed, Hourly wage rate(s) paid, Supplements paid or provided, and Daily and weekly number of hours worked in each classification.

Every contractor and subcontractor shall submit to the Department of Jurisdiction (Contracting Agency), within thirty (30) days after issuance of its first payroll and every thirty (30) days thereafter, a transcript of the original payrolls, subscribed and affirmed as true under penalty of perjury. The Department of Jurisdiction (Contracting Agency) shall collect, review for facial validity, and maintain such payrolls.

In addition, the Commissioner of Labor may require contractors to furnish, with ten (10) days of a request, payroll records sworn to as their validity and accuracy for public work and private work. Payroll records include, by are not limited to time cards, work description sheets, proof that supplements were provided, cancelled payroll checks and payrolls. Failure to provide the requested information within the allotted ten (10) days will result in the withholding of up to 25% of the contract, not to exceed $100,000.00. If the contractor or subcontractor does not maintain a place of business in New York State and the amount of the contract exceeds $25,000.00, payroll records and certifications must be kept on the project worksite.

The prime contractor is responsible for any underpayments of prevailing wages or supplements by any subcontractor.

All contractors or their subcontractors shall provide to their subcontractors a copy of the Prevailing Rate Schedule specified in the public work contract as well as any subsequently issued schedules. A failure to provide these schedules by a contractor or subcontractor is a violation of Article 8, Section 220-a of the Labor Law.

All subcontractors engaged by a public work project contractor or its subcontractor, upon receipt of the original schedule and any subsequently issued schedules, shall provide to such contractor a verified statement attesting that the subcontractor has received the Prevailing Rate Schedule and will pay or provide the applicable rates of wages and supplements specified therein. (See NYS Labor Laws, Article 8 . Section 220-a).

Determination of Prevailing Wage and Supplement Rate Updates Applicable to All Counties

The wages and supplements contained in the annual determination become effective July 1st whether or not the new determination has been received by a given contractor. Care should be taken to review the rates for obvious errors. Any corrections should be brought to the Department's attention immediately. It is the responsibility of the public work contractor to use the proper rates. If there is a question on the proper classification to be used, please call the district office located nearest the project. Any errors in the annual determination will be corrected and posted to the NYSDOL website on the first business day of each month. Contractors are responsible for paying these updated rates as well, retroactive to July 1st.

When you review the schedule for a particular occupation, your attention should be directed to the dates above the column of rates. These are the dates for which a given set of rates is effective. To the extent possible, the Department posts rates in its possession that cover periods of time beyond the July 1st to June 30th time frame covered by a particular annual determination. Rates that extend beyond that instant time period are informational ONLY and may be updated in future annual determinations that actually cover the then appropriate July 1st to June 30th time period.

Withholding of Payments

When a complaint is filed with the Commissioner of Labor alleging the failure of a contractor or subcontractor to pay or provide the prevailing wages or supplements, or when the Commissioner of Labor believes that unpaid wages or supplements may be due, payments on the public work contract shall be withheld from the prime contractor in a sufficient amount to satisfy the alleged unpaid wages and supplements, including interest and civil penalty, pending a final determination.

When the Bureau of Public Work finds that a contractor or subcontractor on a public work project failed to pay or provide the requisite prevailing wages or supplements, the Bureau is authorized by Sections 220-b and 235.2 of the Labor Law to so notify the financial officer of the Department of Jurisdiction (Contracting Agency) that awarded the public work contract. Such officer MUST then withhold or cause to be withheld from any payment due the prime contractor on account of such contract the amount indicated by the Bureau as sufficient to satisfy the unpaid wages and supplements, including interest and any civil penalty that may be assessed by the Commissioner of Labor. The withholding continues until there is a final determination of the underpayment by the Commissioner of Labor or by the court in the event a legal proceeding is instituted for review of the determination of the Commissioner of Labor.

The Department of Jurisdiction (Contracting Agency) shall comply with this order of the Commissioner of Labor or of the court with respect to the release of the funds so withheld.

Summary of Notice Posting Requirements

The current Prevailing Rate Schedule must be posted in a prominent and accessible place on the site of the public work project. The prevailing wage schedule must be encased in, or constructed of, materials capable of withstanding adverse weather conditions and be titled "PREVAILING RATE OF WAGES" in letters no smaller than two (2) inches by two (2) inches.

The "Public Work Project" notice must be posted at the beginning of the performance of every public work contract, on each job site.

Every employer providing workers. compensation insurance and disability benefits must post notices of such coverage in the format prescribed by the Workers. Compensation Board in a conspicuous place on the jobsite.

Every employer subject to the NYS Human Rights Law must conspicuously post at its offices, places of employment, or employment training centers, notices furnished by the State Division of Human Rights.

Employers liable for contributions under the Unemployment Insurance Law must conspicuously post on the jobsite notices furnished by the NYS Department of Labor.

Apprentices

Employees cannot be paid apprentice rates unless they are individually registered in a program registered with the NYS Commissioner of Labor. The allowable ratio of apprentices to journeyworkers in any craft classification can be no greater than the statewide building trade ratios promulgated by the Department of Labor and included with the Prevailing Rate Schedule. An employee listed on a payroll as an apprentice who is not registered as above or is performing work outside the classification of work for which the apprentice is indentured, must be paid the prevailing journeyworker's wage rate for the classification of work the employee is actually performing.

NYSDOL Labor Law, Article 8, Section 220-3, require that only apprentices individually registered with the NYS Department of Labor may be paid apprenticeship rates on a public work project. No other Federal or State Agency of office registers apprentices in New York State.

Persons wishing to verify the apprentice registration of any person must do so in writing by mail, to the NYSDOL Office of Employability Development / Apprenticeship Training, State Office Bldg. Campus, Bldg. 12, Albany, NY 12240 or by Fax to NYSDOL Apprenticeship Training (518) 457-7154. All requests for verification must include the name and social security number of the person for whom the information is requested.

The only conclusive proof of individual apprentice registration is written verification from the NYSDOL Apprenticeship Training Albany Central office. Neither Federal nor State Apprenticeship Training offices outside of Albany can provide conclusive registration information.

It should be noted that the existence of a registered apprenticeship program is not conclusive proof that any person is registered in that program. Furthermore, the existence or possession of wallet cards, identification cards, or copies of state forms is not conclusive proof of the registration of any person as an apprentice.

Interest and Penalties

In the event that an underpayment of wages and/or supplements is found:

- Interest shall be assessed at the rate then in effect as prescribed by the Superintendent of Banks pursuant to section 14-a of the Banking Law, per annum from the date of underpayment to the date restitution is made.
- A Civil Penalty may also be assessed, not to exceed 25% of the total of wages, supplements, and interest due.

Debarment

Any contractor or subcontractor and/or its successor shall be ineligible to submit a bid on or be awarded any public work contract or subcontract with any state, municipal corporation or public body for a period of five (5) years when:

- Two (2) willful determinations have been rendered against that contractor or subcontractor and/or its successor within any consecutive six (6) year period.
- There is any willful determination that involves the falsification of payroll records or the kickback of wages or supplements.

Criminal Sanctions

Willful violations of the Prevailing Wage Law (Article 8 of the Labor Law) may be a felony punishable by fine or imprisonment of up to 15 years, or both.

Discrimination

No employee or applicant for employment may be discriminated against on account of age, race, creed, color, national origin, sex, disability or marital status.

No contractor, subcontractor nor any person acting on its behalf, shall by reason of race, creed, color, disability, sex or national origin discriminate against any citizen of the State of New York who is qualified and available to perform the work to which the employment relates (NYS Labor Law, Article 8, Section 220-e(a)).

No contractor, subcontractor, nor any person acting on its behalf, shall in any manner, discriminate against or intimidate any employee on account of race, creed, color, disability, sex, or national origin (NYS Labor Law, Article 8, Section 220-e(b)).

The Human Rights Law also prohibits discrimination in employment because of age, marital status, or religion.

There may be deducted from the amount payable to the contractor under the contract a penalty of $50.00 for each calendar day during which such person was discriminated against or intimidated in violation of the provision of the contract (NYS Labor Law, Article 8, Section 220-e(c)).

The contract may be cancelled or terminated by the State or municipality. All monies due or to become due thereunder may be forfeited for a second or any subsequent violation of the terms or conditions of the anti-discrimination sections of the contract (NYS Labor Law, Article 8, Section 220-e(d)).

Every employer subject to the New York State Human Rights Law must conspicuously post at its offices, places of employment, or employment training centers notices furnished by the State Division of Human Rights.

Workers' Compensation

In accordance with Section 142 of the State Finance Law, the contractor shall maintain coverage during the life of the contract for the benefit of such employees as required by the provisions of the New York State Workers' Compensation Law.

A contractor who is awarded a public work contract must provide proof of workers' compensation coverage prior to being allowed to begin work.

The insurance policy must be issued by a company authorized to provide workers' compensation coverage in New York State. Proof of coverage must be on form C-105.2 (Certificate of Workers' Compensation Insurance) and must name this agency as a certificate holder.

If New York State coverage is added to an existing out-of-state policy, it can only be added to a policy from a company authorized to write workers' compensation coverage in this state. The coverage must be listed under item 3A of the information page.

The contractor must maintain proof that subcontractors doing work covered under this contract secured and maintained a workers' compensation policy for all employees working in New York State.

Every employer providing worker's compensation insurance and disability benefits must post notices of such coverage in the format prescribed by the Workers' Compensation Board in a conspicuous place on the jobsite.

Unemployment Insurance

Employers liable for contributions under the Unemployment Insurance Law must conspicuously post on the jobsite notices furnished by the New York State Department of Labor.

Andrew M. Cuomo, Governor

Roberta Reardon, Commissioner

NYS Thruway Authority

Tina Masi, Civil Engineer I
200 Southern Blvd
Albany NY 12209

Schedule Year	2016 through 2017
Date Requested	09/21/2016
PRC#	2016009628

Location	MP 100.8 - MP 109.3
Project ID#	D214482
Project Type	Safety Upgrades, Culvert Extensions, Drainage Improvements and Miscellaneous Work

Notice of Contract Award

New York State Labor Law, Article 8, Section 220.3a requires that certain information regarding the awarding of public work contracts, be furnished to the Commissioner of Labor. One "Notice of Contract Award" (PW 16, which may be photocopied), **MUST** be completed for **EACH** prime contractor on the above referenced project.

Upon notifying the successful bidder(s) of this contract, enter the required information and mail **OR** fax this form to the office shown at the bottom of this notice, **OR** fill out the electronic version via the NYSDOL website.

Contractor Information

All information must be supplied

Federal Employer Identification Number: _____

Name: _____

Address: _____

_____

City: _____ State: _____ Zip: _____

Amount of Contract: $_____

Approximate Starting Date: ____/____/____

Approximate Completion Date: ____/____/____

Contract Type:

[ ] (01) General Construction
[ ] (02) Heating/Ventilation
[ ] (03) Electrical
[ ] (04) Plumbing
[ ] (05) Other : _____

Phone: (518) 457-5589 Fax: (518) 485-1870
W. Averell Harriman State Office Campus, Bldg. 12, Room 130, Albany, NY 12240

IMPORTANT NOTICE

FOR

CONTRACTORS & CONTRACTING AGENCIES

Social Security Numbers on Certified Payrolls

The Department of Labor is cognizant of the concerns of the potential for misuse or inadvertent disclosure of social security numbers. Identity theft is a growing problem and we are sympathetic to contractors' concerns with regard to inclusion of this information on payrolls if another identifier will suffice.

For these reasons, ***the substitution of the use of the last four digits of the social security number on certified payrolls submitted to contracting agencies on public work projects is now acceptable to the Department of Labor.***

NOTE: This change does not affect the Department's ability to request and receive the entire social security number from employers during the course of its public work / prevailing wage investigations.

To all State Departments, Agency Heads and Public Benefit Corporations
IMPORTANT NOTICE REGARDING PUBLIC WORK ENFORCEMENT FUND

Budget Policy & Reporting Manual

B-610

Public Work Enforcement Fund

effective date December 7, 2005

---

1. Purpose and Scope:

This Item describes the Public Work Enforcement Fund (the Fund, PWEF) and its relevance to State agencies and public benefit corporations engaged in construction or reconstruction contracts, maintenance and repair, and announces the recently-enacted increase to the percentage of the dollar value of such contracts that must be deposited into the Fund. This item also describes the roles of the following entities with respect to the Fund:

- New York State Department of Labor (DOL),
- The Office of the State of Comptroller (OSC), and
- State agencies and public benefit corporations.

2. Background and Statutory References:

DOL uses the Fund to enforce the State's Labor Law as it relates to contracts for construction or reconstruction, maintenance and repair, as defined in subdivision two of Section 220 of the Labor Law. State agencies and public benefit corporations participating in such contracts are required to make payments to the Fund.

Chapter 511 of the Laws of 1995 (as amended by Chapter 513 of the Laws of 1997, Chapter 655 of the Laws of 1999, Chapter 376 of the Laws of 2003 and Chapter 407 of the Laws of 2005) established the Fund.

3. Procedures and Agency Responsibilities:

The Fund is supported by transfers and deposits based on the value of contracts for construction and reconstruction, maintenance and repair, as defined in subdivision two of Section 220 of the Labor Law, into which all State agencies and public benefit corporations enter.

Chapter 407 of the Laws of 2005 increased the amount required to be provided to this fund to .10 of one-percent of the total cost of each such contract, to be calculated at the time agencies or public benefit corporations enter into a new contract or if a contract is amended. The provisions of this bill became effective August 2, 2005.

To all State Departments, Agency Heads and Public Benefit Corporations
IMPORTANT NOTICE REGARDING PUBLIC WORK ENFORCEMENT FUND

OSC will report to DOL on all construction-related ("D") contracts approved during the month, including contract amendments, and then DOL will bill agencies the appropriate assessment monthly. An agency may then make a determination if any of the billed contracts are exempt and so note on the bill submitted back to DOL. For any instance where an agency is unsure if a contract is or is not exempt, they can call the Bureau of Public Work at the number noted below for a determination. Payment by check or journal voucher is due to DOL within thirty days from the date of the billing. DOL will verify the amounts and forward them to OSC for processing.

For those contracts which are not approved or administered by the Comptroller, monthly reports and payments for deposit into the Public Work Enforcement Fund must be provided to the Administrative Finance Bureau at the DOL within 30 days of the end of each month or on a payment schedule mutually agreed upon with DOL.

Reports should contain the following information:

- Name and billing address of State agency or public benefit corporation;
- State agency or public benefit corporation contact and phone number;
- Name and address of contractor receiving the award;
- Contract number and effective dates;
- Contract amount and PWEF assessment charge (if contract amount has been amended, reflect increase or decrease to original contract and the adjustment in the PWEF charge); and
- Brief description of the work to be performed under each contract.

Checks and Journal Vouchers, payable to the "New York State Department of Labor" should be sent to:

Department of Labor
Administrative Finance Bureau-PWEF Unit
Building 12, Room 464
State Office Campus
Albany, NY 12240

Any questions regarding billing should be directed to NYSDOL's Administrative Finance Bureau-PWEF Unit at (518) 457-3624 and any questions regarding Public Work Contracts should be directed to the Bureau of Public Work at (518) 457-5589.

Construction Industry
Fair Play Act

Required Posting For Labor Law
Article 25-B § 861-d

Construction industry employers must post the "Construction Industry Fair Play Act" notice in a prominent and accessible place on the job site.

Failure to post the notice can result in penalties of up to $1,500 for a first offense and up to $5,000 for a second offense.

The posting is included as part of this wage schedule. Additional copies may be obtained from the NYS DOL website, www.labor.ny.gov.

If you have any questions concerning the Fair Play Act, please call the State Labor Department toll-free at 1-866-435-1499 or email us at: dol.misclassified@labor.state.ny.us .

New York State Department of Labor
Required Notice under Article 25-B of the Labor Law

ATTENTION ALL EMPLOYEES, CONTRACTORS AND SUBCONTRACTORS:
YOU ARE COVERED BY THE
CONSTRUCTION INDUSTRY FAIR PLAY ACT

The law says that you are an employee unless:

- You are free from direction and control in performing your job AND
- You perform work that is not part of the usual work done by the business that hired you AND
- You have an independently established business

Your employer cannot consider you to be an independent contractor unless all three of these facts apply to your work.

IT IS AGAINST THE LAW FOR AN EMPLOYER TO MISCLASSIFY EMPLOYEES AS INDEPENDENT CONTRACTORS OR PAY EMPLOYEES OFF-THE-BOOKS.

Employee rights. If you are an employee:

- You are entitled to state and federal worker protections such as
  - unemployment benefits, if unemployed through no fault of your own, able to work, and otherwise qualified
  - workers' compensation benefits for on-the-job injuries
  - payment for wages earned, minimum wage, and overtime (under certain conditions)
  - prevailing wages on public work projects
  - the provisions of the National Labor Relations Act and
  - a safe work environment
- It is a violation of this law for employers to retaliate against anyone who asserts their rights under the law. Retaliation subjects an employer to civil penalties, a private lawsuit or both.

Independent Contractors: If you are an independent contractor*:*

- You must pay all taxes required by New York State and Federal Law.

Penalties for paying off-the-books or improperly treating employees as independent contractors:

- **Civil Penalty** — First Offense: up to $2,500 per employee.
  Subsequent Offense(s): up to $5,000 per employee.

- **Criminal Penalty** — First Offense: Misdemeanor - up to 30 days in jail, up to a $25,000 fine and debarment from performing Public Work for up to one year.
  Subsequent Offense(s): Misdemeanor - up to 60 days in jail, up to a $50,000 fine and debarment from performing Public Work for up to 5 years.

If you have questions about your employment status or believe that your employer may have violated your rights and you want to file a complaint, call the Department of Labor at 1(866)435-1499 or send an email to dol.misclassified@labor.state.ny.us. All complaints of fraud and violations are taken seriously and you can remain anonymous.

Employer Name:

IA 999 (09/10)

WORKER NOTIFICATION

(Labor Law §220, paragraph a of subdivision 3-a)

Effective February 24, 2008

This provision is an addition to the existing prevailing wage rate law, Labor Law §220, paragraph a of subdivision 3-a. It requires contractors and subcontractors to provide written notice to all laborers, workers or mechanics of the *prevailing wage rate* for their particular job classification *on each pay stub**. It also requires contractors and subcontractors to *post a notice* at the beginning of the performance of every public work contract *on each job site* that includes the telephone number and address for the Department of Labor and a statement informing laborers, workers or mechanics of their right to contact the Department of Labor if he/she is not receiving the proper prevailing rate of wages and/or supplements for his/her particular job classification. The required notification will be provided with each wage schedule, may be downloaded from our web site www.labor.state.ny.us or made available upon request by contacting the Bureau of Public Work at 518-457-5589.

* In the event that the required information will not fit on the pay stub, an accompanying sheet or attachment of the information will suffice.

(11.11)

New York State Department of Labor
Bureau of Public Work

Attention Employees

THIS IS A:

PUBLIC WORK PROJECT

If you are employed on this project as a **worker, laborer, or mechanic** you are entitled to receive the **prevailing wage and supplements rate** for the classification at which you are working.

Chapter 629 of the Labor Laws of 2007:

These wages are set by law and must be posted at the work site. They can also be found at: www.labor.ny.gov

If you feel that you have not received proper wages or benefits, please call our nearest office.*

Albany	(518) 457-2744	Patchogue	(631) 687-4882
Binghamton	(607) 721-8005	Rochester	(585) 258-4505
Buffalo	(716) 847-7159	Syracuse	(315) 428-4056
Garden City	(516) 228-3915	Utica	(315) 793-2314
New York City	(212) 932-2419	White Plains	(914) 997-9507
Newburgh	(845) 568-5156		

* For New York City government agency construction projects, please contact the Office of the NYC Comptroller at (212) 669-4443, or www.comptroller.nyc.gov – click on Bureau of Labor Law.

Contractor Name: _____

Project Location: _____

OSHA 10-hour Construction

Safety and Health Course – S1537-A

Effective July 18, 2008

This provision is an addition to the existing prevailing wage rate law, Labor Law §220, section 220-h. It requires that on all public work projects of at least $250,000.00, all laborers, workers and mechanics working on the site, be certified as having successfully completed the OSHA 10-hour construction safety and health course. It further requires that the advertised bids and contracts for every public work contract of at least $250,000.00, contain a provision of this requirement.

NOTE: ***The OSHA 10 Legislation only applies to workers on a public work project that are required, under Article 8, to receive the prevailing wage.***

Where to find OSHA 10-hour Construction Course

1. NYS Department of Labor website for scheduled outreach training at:

   www.labor.state.ny.us/workerprotection/safetyhealth/DOSH_ONSITE_CONSULTATION.shtm

2. OSHA Training Institute Education Centers:

   Rochester Institute of Technology OSHA Education Center
   Rochester, NY
   Donna Winter
   Fax (585) 475-6292
   e-mail: dlwtpo@rit.edu
   (866) 385-7470 Ext. 2919
   www.rit.edu/~outreach/course.php3?CourseID=54

   Atlantic OSHA Training Center
   UMDNJ – School of Public Health
   Piscataway, NJ
   Janet Crooks
   Fax (732) 235-9460
   e-mail: crooksje@umdnj.edu
   (732) 235-9455
   https://ophp.umdnj.edu/wconnect/ShowSchedule.awp?~~GROUP~AOTCON~10~

   Atlantic OSHA Training Center
   University at Buffalo
   Buffalo, New York
   Joe Syracuse
   Fax (716) 829-2806
   e-mail:mailto:japs@buffalo.edu
   (716) 829-2125
   http://www.smbs.buffalo.edu/CENTERS/trc/schedule_OSHA.php

   Keene State College
   Manchester, NH
   Leslie Singleton
   e-mail: lsingletin@keene.edu
   (800) 449-6742
   www.keene.edu/courses/print/courses_osha.cfm

3. List of trainers and training schedules for OSHA outreach training at:

   www.OutreachTrainers.org

Requirements for OSHA 10 Compliance

Chapter 282 of the Laws of 2007, codified as Labor Law 220-h took effect on July 18, 2008. The statute provides as follows:

The advertised specifications for every contract for public work of $250,000.00 or more must contain a provision requiring that every worker employed in the performance of a public work contract shall be certified as having completed an OSHA 10 safety training course. The clear intent of this provision is to require that all employees of public work contractors, required to be paid prevailing rates, receive such training "prior to the performing any work on the project."

The Bureau will enforce the statute as follows:

All contractors and sub contractors must attach a copy of proof of completion of the OSHA 10 course to the first certified payroll submitted to the contracting agency and on each succeeding payroll where any new or additional employee is first listed.

Proof of completion may include but is not limited to:

- Copies of bona fide course completion card (*Note: Completion cards do not have an expiration date.*)
- Training roster, attendance record of other documentation from the certified trainer pending the issuance of the card.
- Other valid proof

**A certification by the employer attesting that all employees have completed such a course is not sufficient proof that the course has been completed.

Any questions regarding this statute may be directed to the New York State Department of Labor, Bureau of Public Work at 518-485-5696.

IMPORTANT INFORMATION

Regarding Use of Form PW30R

"Employer Registration for Use of 4 Day / 10 Hour Work Schedule"

To use the '4 Day / 10 Hour Work Schedule':

There MUST be a *Dispensation of Hours (PW30)* in place on the project

AND

You MUST register your intent to work 4 / 10 hour days, by completing the PW30R Form.

REMEMBER…

The '4 Day / 10 Hour Work Schedule' applies ONLY to Job Classifications and Counties listed on the PW30R Form.

Do not write in any additional Classifications or Counties.

(**Please note** : For each Job Classification check the individual wage schedule for specific details regarding their 4/10 hour day posting.)

Instructions for Completing Form PW30R

"Employer Registration for Use of 4 Day / 10 Hour Work Schedule"

Before completing Form PW30R check to be sure …

- There is a *Dispensation of Hours* in place on the project.
- The 4 Day / 10 Hour Work Schedule applies to the Job Classifications you will be using.
- The 4 Day / 10 Hour Work Schedule applies to the County / Counties where the work will take place.

Instructions (Type or Print legibly):

Contractor Information:

- Enter the Legal Name of the business, FEIN, Street Address, City, State, Zip Code; the Company's Phone and Fax numbers; and the Company's email address (if applicable)
- Enter the Name of a Contact Person for the Company along with their Phone and Fax numbers, and the personal email address (if applicable)

Project Information:

- Enter the Prevailing Rate Case number (PRC#) assigned to this project
- Enter the Project Name / Type (i.e. Smithtown CSD – Replacement of HS Roof)
- Enter the Exact Location of Project (i.e. Smithtown HS, 143 County Route #2, Smithtown,NY; Bldgs. 1 & 2)
- If you are a Subcontractor, enter the name of the Prime Contractor for which you work
- On the Checklist of Job Classifications -
  - Go to pages 2 and 3 of the form
  - Place a checkmark in the box to the right of the Job Classification you are choosing
  - Mark all Job Classifications that apply

    ****Do not write in any additional Classifications or Counties.****

Requestor Information:

- Enter the name of the person submitting the registration, their title with the company , and the date the registration is filled out

Return Completed Form:

- **Mail** the completed PW30R form (3 pages) to: NYSDOL Bureau of Public Work, SOBC – Bldg.12 – Rm.130, Albany, NY 12240 -***OR -***
- **Fax** the completed PW30R form (3 pages) to: NYSDOL Bureau of Public Work at (518)485-1870

Bureau of Public Work
Harriman State Office Campus
Building 12 - Room 130
Albany, New York 12240
Phone - (518) 457-5589 Fax - (518) 485-1870

Employer Registration for Use of 4 Day / 10 Hour Work Schedule

Before completing Form PW30R check to be sure …
There is a *Dispensation of Hours* in place on the project.
The 4 Day / 10 Hour Work Schedule applies to the Job Classifications you will be using.
The 4 Day / 10 Hour Work Schedule applies to the County / Counties where the work will take place.

Please Type or Print the Requested Information

When completed …
Mail to NYSDOL Bureau of Public Work, SOBC, Bldg. 12, Rm.130, Albany, NY 12240
-or-
Fax to NYSDOL Bureau of Public Work at (518) 485-1870

Contractor Information

Company Name: _____ FEIN: _____

Address: _____

City: _____ State: _____ Zip Code: _____

Phone Number _____ Fax Number: _____ Email Address: _____

Contact Person: _____

Phone No: _____ Fax No: _____ Email: _____

Project Information

Project PRC#: _____ Project Name/Type: _____

Exact Location of Project: _____ County: _____

(If you are Subcontractor)
Prime Contractor Name: _____

Job Classification(s) to Work 4/10 Schedule: *(Choose all that apply on Job Classification Checklist - Pages 3 -7)*
**** Do not write in any additional Classifications or Counties****

Requestor Information

Name: _____

Title: _____ Date : _____

Please use the list below with the number assigned to each county as a reference to the corresponding numbers listed in the following pages under "Entire Counties" & "Partial Counties".

1. Albany County
2. Allegany County
3. Bronx County
4. Broome County
5. Cattaraugus County
6. Cayuga County
7. Chautauqua County
8. Chemung County
9. Chenango County
10. Clinton County
11. Columbia County
12. Cortland County
13. Delaware County
14. Dutchess County
15. Erie County
16. Essex County
17. Franklin County
18. Fulton county
19. Genesee County
20. Greene County
21. Hamilton County
22. Herkimer County
23. Jefferson County
24. Kings County (Brooklyn)
25. Lewis County
26. Livingston County
27. Madison County
28. Monroe County
29. Montgomery County
30. Nassau County
31. New York County (Manhattan)
32. Niagara County
33. Oneida County
34. Onondaga County
35. Ontario County
36. Orange County
37. Orleans County
38. Oswego County
39. Otsego County
40. Putnam County
41. Queens County
42. Rensselaer County
43. Richmond County (Staten Island)
44. Rockland County
45. Saint Lawrence County
46. Saratoga County
47. Schenectady County
48. Schoharie County
49. Schuyler County
50. Seneca County
51. Steuben County
52. Suffolk County
53. Sullivan County
54. Tioga County
55. Tompkins County
56. Ulster County
57. Warren county
58. Washington County
59. Wayne County
60. Westchester County
61. Wyoming County
62. Yates County

Job Classification Checklist

(Place a checkmark by all classifications that will be using the 4/10 schedule)

**** Do not write in any additional Classifications or Counties****

Job Classification	Tag #	Entire Counties	Partial Counties	Check Box
Carpenter-Building	276B-All	7	2 ,5	☐
Carpenter-Building	276B-Cat	15	5	☐
Carpenter - Building	276-B--LIV	26, 28, 35, 59	61	☐
Carpenter-Building	276B-Gen	19, 32, 37	61	☐
Carpenter-Floor Layers	276B-FL-Liv	26, 28, 35, 59	61	☐
Carpenter-Heavy&Highway	276HH-All	2, 5, 7		☐
Carpenter-Heavy&Highway	276HH-Erie	15		☐
Carpenter-Heavy&Highway	276HH- Gen	19, 32, 37, 61		☐
Carpenter-Heavy&Highway	276HH-Liv	26, 28, 35, 59		☐
Carpenter-Residential	276R-All	7	2, 5	☐
Carpenter - Building	277B-Bro	4, 54		☐
Carpenter - Building	277B-CAY	6, 50, 62		☐
Carpenter - Building	277B-CS	8, 12, 49, 51, 55	2	☐
Carpenter - Building	277 JLS	23, 25, 45		☐
Carpenter - Building	277 omh	22, 27, 33		☐
Carpenter - Building	277 On	34		☐
Carpenter - Building	277 Os	38		☐
Carpenter - Building	277CDO Bldg	9, 13, 39		☐
Carpenter - Heavy&Highway	277CDO HH	9, 13, 39		☐
Carpenter - Heavy&Highway	277HH-BRO	4, 6, 8, 12, ,22, 23, 25, 27, 33, 34, 38, 45, 49, 50, 51, 54, 55, 62		☐
Carpenter - Building	291B-Alb	1, 18, 20, 29, 42, 47, 48		☐
Carpenter - Building	291B-Cli	10, 16, 17		☐
Carpenter - Building	291B-Ham	21, 57, 58		☐
Carpenter - Building	291B-Sar	46		☐
Carpenter - Heavy&Highway	291HH-Alb	1, 10, 16, 17,18, 20, 21, 29, 42, 46, 47, 48, 57, 58		☐
Electrician	25m	30, 52		☐
Electrician-Teledata Cable Splicer	43	12, 22, 27, 33, 38	6, 9, 34, 39, 55, 59	☐

Job Classification Checklist

(Place a checkmark by all classifications that will be using the 4/10 schedule)

**** Do not write in any additional Classifications or Counties****

Job Classification	Tag #	Entire Counties	Partial Counties	Check Box
Electrician	86	26, 28	19, 35, 37, 59, 61	☐
Electrician	840Teledata and 840 Z1	62	6, 34, 35, 50, 59	☐
Electrician	910	10, 16, 17, 23, 25, 45		☐
Electrician Lineman	1049Line/Gas	30, 41, 52		☐
Electrician Lineman	1249a	1, 2, 4, 5, 6, 7, 8, 9, 10, 11, 12, 13, 14, 15, 16, 17, 18, 19, 20, 21, 22, 23, 25, 26, 27, 28, 29, 32, 33, 34, 35, 36, 37, 38, 39, 40, 42, 44, 46, 47, 48, 49, 50, 45, 51, 53, 54, 55, 56, 57, 58, 59, 61, 62		☐
Electrical Lineman	1249a West	60		☐
Electrical Lineman	1249a-LT	1, 2, 4, 5, 6, 7, 8, 9, 10, 12, 13, 15, 16, 17, 18, 19, 20, 21, 22, 23, 25, 26, 27, 28, 29, 32, 33, 34, 35, 37, 38, 39, 42, 46, 47, 48, 49, 50, 45, 51, 53, 54, 55, 57, 58, 59, 61, 62		☐
Electrical Lineman	1249aREG8LT	11, 14, 36, 40, 44, 56		☐
Electrical Lineman	1249aWestLT	60		☐
Elevator Constructor	138	11, 14, 20, 36, 40, 53, 56	13, 44, 60	☐
Elevator Constructor	14	2, 5, 7, 15, 19, 32, 37, 61		☐
Elevator Constructor	27	8, 26, 28, 35, 49, 50, 51, 59, 62		☐
Elevator Constructor	35	1, 10, 16, 18, 21, 22, 29, 39, 42, 46, 47, 48, 57, 58		☐
Elevator Constructor	62.1	4, 6, 9, 12, 23, 25, 27, 33, 34, 38, 45, 54, 55	13	☐
Glazier	201	1, 10, 11, 16, 17, 18, 20, 21, 29, 42, 46, 47, 48, 57, 58		☐
Glazier	660r	2, 5, 7, 15, 19, 32, 37, 61		☐
Glazier	660	2, 5, 7, 15, 19, 32, 37, 61		☐
Glazier	677.1	23, 25, 26, 28, 35, 45, 50, 59, 62		☐
Glazier	677Z-2	6, 12, 22, 27, 33, 34, 38		☐
Glazier	677z3	4, 8, 9, 13, 39, 49, 51, 54, 55		☐
Glazier	677r.2	6, 12, 22, 27, 33, 34, 38		☐
Insulator - Heat & Frost	30-Syracuse	4, 6, 8, 9, 12, 22, 23, 25, 27, 33, 34, 38, 39, 49, 50, 45, 54, 55		☐
Laborers- Tunnel	157	47	18, 29, 46	☐
Laborers- Heavy & Highway	157h/h	47	18, 29, 46	☐

Job Classification Checklist

(Place a checkmark by all classifications that will be using the 4/10 schedule)

**** Do not write in any additional Classifications or Counties****

Job Classification	Tag #	Entire Counties	Partial Counties	Check Box
Laborers- Heavy & Highway	1822/2h	10,16,57		☐
Laborers- Heavy & Highway	1822/2h(2)	17, 23, 25, 45		☐
Laborers- Tunnel	1822T	10, 16 57		☐
Laborers- Tunnel	1822T(2)	17, 23, 25, 45		☐
Laborers- Tunnel	35T	21, 22, 27, 33	18, 29	☐
Laborers- Tunnel	190	1, 42, 58	11, 20, 46	☐
Laborers- Heavy & Highway	190 h/h	1, 42, 58	11, 20, 46	☐
Laborers- Heavy & Highway	35/2h	21, 22, 27, 33	18, 29	☐
Laborers- Tunnel	35T	21, 22, 27, 33	18, 29	☐
Laborers- Heavy & Highway	633hON	34		☐
Laborers- Heavy & Highway	633hOS	38		☐
Laborers- Heavy & Highway	633h Cay	6		☐
Laborers- building	633 bON	34		☐
Laborers- building	633b Cay	6		☐
Laborers- building	633bOS	38		☐
Laborers- Tunnel	633T (Cay)	6		☐
Laborers- Tunnel	633T (ON)	34		☐
Laborers- Tunnel	633T (OS)	38		☐
Laborers- Heavy & Highway	785h	12, 55	49, 54	☐
Laborers-Tunnel	785T	12, 55		☐
Laborers - Building	785(7)	4	9, 13, 54	☐
Laborers - Building	785B-CS	8, 51	49	☐
Laborers- Heavy & Highway	7-785b	12, 55	49, 54	☐
Laborers Heavy & Highway	785(7)	4	9, 13, 54	☐
Laborer - Heavy & Highway	785HH-CS	8, 51	49	☐
Laborer - Building	621b	2, 7	5	☐
Laborer - Residential	621r	2, 7	5	☐

Job Classification Checklist

(Place a checkmark by all classifications that will be using the 4/10 schedule)

**** Do not write in any additional Classifications or Counties****

Job Classification	Tag #	Entire Counties	Partial Counties	Check Box
Mason-Building	2TS.1	1, 10,11, 16, 17, 18, 20, 21, 29, 42, 46, 47, 48, 57, 58		☐
Mason-Building	2TS.2	22, 23, 25, 33, 45	27	☐
Mason-Building	2TS.3	6, 34, 38	27	☐
Mason-Building	2b-on	34		☐
Mason-Building	2b.1	1, 11, 18, 20, 21, 29, 42, 46, 47, 48, 58	57	☐
Mason-Building	2b.2	22, 33	25	☐
Mason-Building	2b.3	6, 34	27	☐
Mason-Building	2b.4	38		☐
Mason-Building	2b.5	23	25	☐
Mason-Building	2b.6	45		☐
Mason-Building	2b.8	10, 16, 17	57	☐
Mason-Building	2b.5	23	25	☐
Mason-Building	2b.6	45		☐
Mason-Building	2b.8	10, 16, 17	57	☐
Mason-Building	3b-Co-Z2	8, 49, 51	2	☐
Mason-Building	3B-Z1	19, 26, 28, 35, 50, 59, 61, 62		☐
Mason-Building-Residential	3B-Z1R	19, 26, 28, 35, 50, 59, 61, 62		☐
Mason-Building	3B-Bing-Z2	4, 9, 13, 39, 54		☐
Mason-Building	3B-Ith-Z2	12, 55		☐
				☐
				☐
				☐
				☐
				☐
				☐

Job Classification Checklist

(Place a checkmark by all classifications that will be using the 4/10 schedule)

**** Do not write in any additional Classifications or Counties****

Job Classification	Tag #	Entire Counties	Partial Counties	Check Box
Mason-Building	3B-Jam-Z2	7	2, 5	☐
Mason-Building-Residential	3B-Jam-Z2R	2, 4, 8, 7, 9, 12, 39, 13, 49, 51, 54, 55	5	☐
Mason-Building	3B-Z3	15, 32	5	☐
Mason-Building	3B-Z3.Orleans	37		☐
Mason-Residential	3B-Z3R	15, 32	5	☐
Mason-Residential	3B-Z3R.Orleans	37		☐
Mason-Heavy Highway	3h	2, 4, 8, 7, 9, 12, 13, 19, 26, 28, 35, 37, 39, 49, 50, 51, 54, 55, 59, 61, 62	5, 15, 32	☐
Mason-Tile Finisher	3TF-Z1	19, 26, 28, 35, 50, 59, 61, 62		☐
Mason-Tile Finisher	3TF-Z2	2, 4, 8, 7, 9, 12, 13, 39, 49, 51, 54, 55	5	☐
Mason-Tile Finisher	3TF-Z3	15, 32, 37	5	☐
Mason-Tile Finisher	3TF-Z1R	19, 26, 28, 35, 50, 59, 61, 62		☐
Mason-Tile Finisher	3TF-Z2R	2, 4, 7, 9, 12, 13, 39, 49, 51, 54, 55	5	☐
Mason-Tile Finisher	3TF-Z3R	15, 32, 37	5	☐
Mason-Tile Setter	3TS-Z1	19, 26, 28, 35, 50, 59, 61, 62		☐
Mason-Tile Setter Residential	3TS-Z1R	19, 26, 28, 35, 50, 59, 61, 62		☐
Mason-Tile Setter	3TS-Z2	2, 4, 7, 8, 9, 12, 13, 39, 49, 51, 54, 55	5	☐
Mason-Tile Setter Residential	3TS-Z2R	2, 4, 7, 8, 9, 12, 13, 39, 49, 51, 54, 55	5	☐
Mason-Tile Setter Residential	3TS-Z3R	15, 32, 37	5	☐
Mason - Building/Heavy&Highway	780	3, 24, 30, 31, 41, 43, 52		☐
Operating Engineer - Heavy/Highway	137H/H	40, 60	14	☐
Operating Engineer - Heavy& Highway	158-832H	2, 8, 26, 28, 35, 49, 51, 59, 62	19	☐
Operating Engineer - Heavy& Highway	158-H/H	1, 4, 9, 10, 11, 14, 16, 17, 18, 20, 21, 22, 29, 39, 42, 46, 47, 48, 54, 57, 58		☐
Operating Engineer - Heavy& Highway	158-545h	6, 12, 23, 25, 27, 33, 38, 45, 50, 55		☐
Painter	1456-LS	1, 3, 10, 11, 14, 16, 17, 18, 20, 21, 24, 29, 30, 31, 36, 40, 41, 42, 43, 44, 46, 47, 48, 52, 53, 56, 57, 58, 60		☐
Painter	150	28, 59, 62	26, 35	☐

Job Classification Checklist

(Place a checkmark by all classifications that will be using the 4/10 schedule)

**** Do not write in any additional Classifications or Counties****

Job Classification	Tag #	Entire Counties	Partial Counties	Check Box
Painter	178 B	4, 9, 54		☐
Painter	178 E	8, 49	51	☐
Painter	178 I	12, 55		☐
Painter	178 O	13, 39		☐
Painter	31	6, 22, 27, 33, 34, 50	25, 35, 38	☐
Painter	38.O		38	☐
Painter	38.W	23, 45	25	☐
Painter	4-Buf,Nia,Olean	2, 15, 19, 32, 37, 61	5, 7, 26, 51	☐
Painter	4-Jamestown		5, 7	☐
Painter	38.O		38	☐
Painter	38.W	23, 45	25	☐
Painter	4-Buf,Nia,Olean	2, 15, 19, 32, 37, 61	5, 7, 26, 51	☐
Painter	4-Jamestown		5, 7	☐
Sheetmetal Worker	46	26, 28, 35, 50, 59, 62		☐
Sheetmetal Worker	46r	26, 28, 35, 50, 59, 62		☐
Teamsters-Heavy&Highway	294h/h	1, 11, 18, 20, 29, 42, 46, 47, 48, 58	57	☐
Teamsters-Heavy&Highway	317bhh	6, 12, 50, 51, 55, 62	2	☐
Teamsters-Building/Heavy&Highway	456	40, 60		☐

Introduction to the Prevailing Rate Schedule

Information About Prevailing Rate Schedule

This information is provided to assist you in the interpretation of particular requirements for each classification of worker contained in the attached Schedule of Prevailing Rates.

Classification

It is the duty of the Commissioner of Labor to make the proper classification of workers taking into account whether the work is heavy and highway, building, sewer and water, tunnel work, or residential, and to make a determination of wages and supplements to be paid or provided. It is the responsibility of the public work contractor to use the proper rate. If there is a question on the proper classification to be used, please call the district office located nearest the project. District office locations and phone numbers are listed below.

Prevailing Wage Schedules are issued separately for "General Construction Projects" and "Residential Construction Projects" on a county-by-county basis.

General Construction Rates apply to projects such as: Buildings, Heavy & Highway, and Tunnel and Water & Sewer rates.

Residential Construction Rates generally apply to construction, reconstruction, repair, alteration, or demolition of one family, two family, row housing, or rental type units intended for residential use.

Some rates listed in the Residential Construction Rate Schedule have a very limited applicability listed along with the rate. Rates for occupations or locations not shown on the residential schedule must be obtained from the General Construction Rate Schedule. Please contact the local Bureau of Public Work office before using Residential Rate Schedules, to ensure that the project meets the required criteria.

Paid Holidays

Paid Holidays are days for which an eligible employee receives a regular day's pay, but is not required to perform work. If an employee works on a day listed as a paid holiday, this remuneration is in addition to payment of the required prevailing rate for the work actually performed.

Overtime

At a minimum, all work performed on a public work project in excess of eight hours in any one day or more than five days in any workweek is overtime. However, the specific overtime requirements for each trade or occupation on a public work project may differ. Specific overtime requirements for each trade or occupation are contained in the prevailing rate schedules.

Overtime holiday pay is the premium pay that is required for work performed on specified holidays. It is only required where the employee actually performs work on such holidays.

The applicable holidays are listed under HOLIDAYS: OVERTIME. The required rate of pay for these covered holidays can be found in the OVERTIME PAY section listings for each classification.

Supplemental Benefits

Particular attention should be given to the supplemental benefit requirements. In most cases the payment or provision of supplements is for each hour worked (noted in the schedule as 'Per hour worked'). Some classifications require the payment or provision of supplements for each hour paid (noted in the schedule as 'Per hour paid'), which require supplements to be paid or provided at a premium rate for premium hours worked. Some classifications may also require the payment or provision of supplements for paid holidays on which no work is performed.

Effective Dates

When you review the schedule for a particular occupation, your attention should be directed to the dates above the column of rates. These are the dates for which a given set of rates is effective. The rate listed is valid until the next effective rate change or until the new annual determination which takes effect on July 1 of each year. All contractors and subcontractors are required to pay the current prevailing rates of wages and supplements. If you have any questions please contact the Bureau of Public Work or visit the New York State Department of Labor website (www.labor.state.ny.us) for current wage rate information.

Apprentice Training Ratios

The following are the allowable ratios of registered Apprentices to Journey-workers.

For example, the ratio 1:1,1:3 indicates the allowable initial ratio is one Apprentice to one Journeyworker. The Journeyworker must be in place on the project before an Apprentice is allowed. Then three additional Journeyworkers are needed before a second Apprentice is allowed. The last ratio repeats indefinitely. Therefore, three more Journeyworkers must be present before a third Apprentice can be hired, and so on.

Please call Apprentice Training Central Office at (518) 457-6820 if you have any questions.

Title (Trade)	Ratio
Boilermaker (Construction)	1:1,1:4
Boilermaker (Shop)	1:1,1:3
Carpenter (Bldg.,H&H, Pile Driver/Dockbuilder)	1:1,1:4
Carpenter (Residential)	1:1,1:3

Electrical (Outside) Lineman	1:1,1:2
Electrician (Inside)	1:1,1:3
Elevator/Escalator Construction & Modernizer	1:1,1:2
Glazier	1:1,1:3
Insulation & Asbestos Worker	1:1,1:3
Iron Worker	1:1,1:4
Laborer	1:1,1:3
Mason	1:1,1:4
Millwright	1:1,1:4
Op Engineer	1:1,1:5
Painter	1:1,1:3
Plumber & Steamfitter	1:1,1:3
Roofer	1:1,1:2
Sheet Metal Worker	1:1,1:3
Sprinkler Fitter	1:1,1:2

If you have any questions concerning the attached schedule or would like additional information, please contact the nearest BUREAU of PUBLIC WORK District Office or write to:

New York State Department of Labor
Bureau of Public Work
State Office Campus, Bldg. 12
Albany, NY 12240

District Office Locations:	Telephone #	FAX #
Bureau of Public Work - Albany	518-457-2744	518-485-0240
Bureau of Public Work - Binghamton	607-721-8005	607-721-8004
Bureau of Public Work - Buffalo	716-847-7159	716-847-7650
Bureau of Public Work - Garden City	516-228-3915	516-794-3518
Bureau of Public Work - Newburgh	845-568-5287	845-568-5332
Bureau of Public Work - New York City	212-932-2419	212-775-3579
Bureau of Public Work - Patchogue	631-687-4882	631-687-4902
Bureau of Public Work - Rochester	585-258-4505	585-258-4708
Bureau of Public Work - Syracuse	315-428-4056	315-428-4671
Bureau of Public Work - Utica	315-793-2314	315-793-2514
Bureau of Public Work - White Plains	914-997-9507	914-997-9523
Bureau of Public Work - Central Office	518-457-5589	518-485-1870

SAMPLE AGREEMENT

NEW YORK STATE THRUWAY AUTHORITY

SAMPLE AGREEMENT

CONTRACT NO:

This **AGREEMENT**, entered into this _____day of_____ 201___, by the **NEW YORK STATE THRUWAY AUTHORITY** (hereinafter referred to as the "**AUTHORITY**") having its principal office at 200 Southern Boulevard, Albany, NY 12209 in the County of Albany and State of New York and

☐ a corporation organized and existing under the laws of the State of

☐ a partnership, consisting of

☐ an individual conducting business as

the location of whose principal office is

hereinafter called the "**CONTRACTOR**".

WITNESSETH: That the Authority and the Contractor for the consideration hereinafter named agree as follows**:**

ARTICLE 1. WORK TO BE DONE. The Contractor shall (a) furnish all the materials, appliances, tools and labor of every kind required, and construct and complete in the most substantial and skillful manner, the construction, improvement or reconstruction of the project on or before the completion date of as further described in ARTICLE 4, and as generally identified and shown on the plans entitled: in the Division of the New York State Thruway in County(s) which constitutes Contract in accordance with the "Standard Specifications" of the New York State Department of Transportation, which contain the information for bidders; form of proposal, agreement, and bonds; general specifications and conditions or contract; materials of construction; and payment Items; and (b) do everything required by the Contract (Contract Documents) as defined herein. The contract closing date, used to keep the contract open for final processing and payment purposes after the completion date is .

The Contractor agrees that its proposal contained herein is based upon performing all the work of the Contract in accordance with a schedule that will result in the completion of the total works by the Date of Completion of the Contract and all intermediate stage and phase completion requirements of the contract, while adhering to all restrictions set forth in the Schedule and Suspension of Work, the Thruway Traffic Plan, and the General and Special Notes, and that the work will be performed at the unit bid prices, as shown on the contract documents and as detailed in the specifications and notes, utilizing the Labor Force, Qualified Disadvantaged, Women Owned and Minority Owned Subcontractor Entrepreneurs and Methods and Materials of Construction as described in the Contract Documents and any incorporated Addenda thereto, and conduct its operations in accordance with the Vehicle and Traffic Law, the Rules and Regulations of the NYS Thruway Authority, and the Thruway Operating Rules and General and Special Notes that are part of this proposal. The Contractor further agrees its proposal is not based upon the assumption that any specifications, traffic restrictions, scheduling or phasing/staging requirements will be waived, an extension of Contract Completion Date will be granted, a labor dispensation will be granted, substitution of non-approved products, alternatives or claimed functional equivalents for Specified Construction Materials and Methods will be allowed, or any Value Engineering Proposals will be entertained and approved by the New York State Thruway Authority, and any requests for a substitution, equivalent or alternate, which it proposes, will be accompanied by an agreed price analysis establishing an applicable credit or illustrating cost equal to or greater than the bid amount.

ARTICLE 2. DOCUMENTS FORMING THE CONTRACT. The Contract (and Contract Documents) shall be deemed to include the advertisement for proposals; the contractor's proposal; the Schedule for Participation By Disadvantaged Business Enterprise Participation goals; the agreement; the "Standard Specifications" including all addenda thereto referred to above; the plans; any addenda and/or amendments to specifications if the same are issued prior to date of receipt of proposal and all provisions required by law to be inserted in the contract whether actually inserted or not. Appendix A, standard clauses for all N.Y State contracts, is attached hereto and is hereby made a part of this agreement as if set forth fully herein.

ARTICLE 3. EXAMINATION OF DOCUMENTS AND SITE. The Contractor agrees that before making its proposal it carefully examined the contract documents, together with the site of the proposed work, as well as its surrounding territory, and is informed regarding all of the conditions affecting the work to be done and labor and materials to be furnished for the completion of this contract, including the existence of poles, wires, pipes, and other facilities and structures of municipal and other public service corporations on, over or under the site, except latent conditions that meet the requirements of §104-04 and §109-05, and that its information was secured by personal investigation and research.

ARTICLE 4. DATE OF COMPLETION. The Contractor further agrees that it will begin the work herein embraced within ten days of the effective date hereof, unless the consent of the Authority, in writing, is given to begin at a later date, and that it will prosecute the same so that it shall be entirely completed and performed on or before the completion date shown in Article 1.

No extension beyond the date of completion fixed by the terms of this contract shall be effective unless in writing signed by the Authority. Such extension shall be for such time and upon such terms and conditions as shall be fixed by the Authority, which may include the assessment of liquidated damages and a charge for engineering and inspection expenses actually incurred upon the work, including engineering and inspection expenses incurred upon the work by railroad companies on contracts for grade crossing elimination. Notice of application for such extension shall be filed with the Chief Engineer, Department of Engineering of the Authority at least fifteen days prior to the date of completion fixed by the terms of this agreement.

ARTICLE 5. ALTERATIONS AND OMISSIONS. The said work shall be performed in accordance with the true intent and meaning of the contract documents without any further expense of any nature whatsoever to the Authority other than the consideration named in this agreement.

The Authority reserves the right at any time during the progress of the work, to alter the plans or omit any portion of the work as it may deem reasonably necessary for the public interest; making allowances for additions and deductions with compensation made in accordance with the Standard Specifications, for this work without constituting grounds for any claim by the contractor for allowance for damages or for loss of anticipated profits, or for any variations between the approximate quantities and the quantities of the work as done.

ARTICLE 6. NO COLLUSION OR FRAUD. The Contractor hereby agrees that the only person or persons interested as principal or principals in the bid or proposal submitted by the Contractor for this contract are named therein, and that no person other than those mentioned therein has any interest in the above-mentioned proposal or in securing of the award, and that this contract has been secured without any connection with any person or persons other than those named, and that the proposal is in all respects fair and was prepared and the contract was secured without collusion or fraud and that neither any officer nor employee of the New York State Thruway Authority or the State Department of Transportation or either of them has or shall have a financial interest in the performance of the contract or in the supplies, work or business to which it relates, or in any portion of the profits thereof. (See also Section 139-a and 139-b of the State Finance Law referred to in the Standard Specifications, which are made a part of this contract.)

ARTICLE 7. CONTRACT PAYMENTS. As the work progresses in accordance with the contract and in a manner that is satisfactory to the Authority, the Authority hereby agrees to make payments to the Contractor therefor, based upon the proposal attached hereto and made a part hereof, as follows: The Authority shall, once in each month and on such days as it may fix, make an estimate of the quantity of work done and of material which has actually been put in place in accordance with the terms and conditions of the contract, during the preceding month, and compute the value thereof and pay to the Contractor the moneys due in accordance with Public Authorities Law Section 2880, as detailed in 21 NYCRR Part 109 (Prompt Payment). No monthly estimate shall be rendered unless the Contractor has provided acceptable documentation with regard to actions taken to comply with the M/WBE goals of the contract (see also §109-06 Contract Payments) and the value of the work done equals 5% of the contract amount or $1,000, whichever is the lesser. Semi-monthly estimates may be rendered provided (a) the value of the work performed in two successive weeks

is more than $100,000 or (b) the Chairman of the Authority deems it to be for the best interest of the Authority to do so. When a performance bond is approved, 5% shall be retained from each progress payment or estimate until final acceptance of the work.

ARTICLE 8. NO PAYMENT DUE TO CONTRACTOR'S NON-COMPLIANCE. It is further agreed that so long as any lawful or proper direction concerning the work or material given by the Chief Engineer, Department of Engineering of the New York State Thruway Authority, or his/her representative, shall remain uncomplied with, the Contractor shall not be entitled to have any estimate made for the purpose of payment, nor shall any estimate be rendered on account of work done or material furnished until such lawful or proper direction aforesaid has been fully and satisfactorily complied with.

ARTICLE 9. FINAL ACCEPTANCE OF WORK. When in the opinion of the Thruway Division Director, a Contractor has fully performed the work under the contract, the Thruway Division Director shall recommend to the Chief Engineer, Department of Engineering of the New York State Thruway Authority, the acceptance of the work so completed. If the Chief Engineer, Department of Engineering accepts the recommendation of the Thruway Division Director, he/she shall thereupon by letter notify the Contractor of such acceptance, and similarly to Subdivision 7, section 38 of the Highway Law, release up to 70% of the money held as retainage. Copies of such acceptance shall be sent to other interested parties. Prior to final acceptance of the work by the Chief Engineer, Department of Engineering of the New York State Thruway Authority or a designee, the contract work may be inspected, accepted and approved by other agencies and/or municipalities who will have jurisdiction of the work after final acceptance.

Final acceptance shall be final and conclusive except for defects not readily ascertainable by the New York State Thruway Authority, actual or constructive, fraud, gross mistakes amounting to fraud or other errors which the Contractor knew or should have known about as well as the New York State Thruway Authority's rights under any warranty or guarantee. Final acceptance may be revoked by the New York State Thruway Authority at any time prior to the issuance of the final check, upon the New York State Thruway Authority's discovery of such defects, mistakes, fraud or errors in the work.

ARTICLE 10. FINAL PAYMENT. After the final acceptance of the work, the Engineer shall prepare a final agreement of the work performed and the materials placed and shall compute the value of such work and materials under and according to the terms of the contract. This agreement shall be certified, as to its correctness, by the Engineer. Upon approval of such final agreement by the Director, Office of Construction Management, it shall be submitted to the Chief Engineer, Department of Engineering for final approval. The right, however, is hereby reserved to the Chief Engineer, Department of Engineering to reject the whole or any portion of the final agreement, should the said certificate of the Engineer be found or known to be inconsistent with the terms of the agreement or otherwise improperly given. All certificates, upon which partial payments may have been made being merely estimates, shall be subject to correction in the final certificate or final agreement.

ARTICLE 11. RIGHT TO SUSPEND WORK AND CANCEL CONTRACT. It is further mutually agreed that if at any time during the prosecution of the work the Authority shall determine that the work upon the contract is not being performed according to the contract or for the best interest of the Authority, the execution of the work by the Contractor may be temporarily suspended by the Chief Engineer, Department of Engineering, who may then proceed with the work under its own direction in such manner as will accord with the contract specifications and be for the best interests of the Authority; or he/she may terminate the contractor's employment under the contract while it is in progress, and thereupon proceed with the work, in affirmance of the contract, by contract negotiated or publicly let, by the use of its own forces, by calling upon the surety to complete the work in accordance with the plans and specifications or by a combination of any such methods; or he/she may cancel the contract and either readvertise and relet in accordance with the provisions of Section 38 of the Highway Law, or complete the work under its own direction in such manner as will accord with the contract specifications and be for the interests of the Authority; any excess in the cost of completing the contract beyond the price for which it was originally awarded shall be charged to and paid by the Contractor failing to perform the work or its surety; all in pursuance of the provisions of Section 40 of the Highway Law.

Whenever the New York State Thruway Authority determines to suspend or stop work under the contract, a written notice sent by mail to the Contractor at its address and to the sureties at their respective addresses, shall be sufficient notice of its action in the premises.

The Thruway Authority reserves the right to terminate this contract in the event that the certification provided by the Contractor in regard to compliance with New York State Finance Law Section 139-j and 139-k was intentionally false or intentionally incomplete.

ARTICLE 12. DETERMINATION AS TO VARIANCES. In any case of any ambiguity in the plans, specifications or maps, or between any of them, the matter must be immediately submitted to the Chief Engineer, Department of Engineering, who shall adjust the same, and his/her decision in relation thereto shall be final and conclusive upon the parties.

ARTICLE 13. SUCCESSORS AND ASSIGNS. This agreement shall bind the successors, assigns and representatives of the parties hereto.

ARTICLE 14. INTERNATIONAL BOYCOTT PROHIBITION. In accordance with Chapter 406 of the Laws of 1981, the Contractor hereby promises, asserts and represents that neither the Contractor nor any substantially owned or affiliated person, firm, partnership or corporation has participated, is participating or shall participate in an international boycott in violation of the provisions of the United States Export Administration Act of 1969, as amended, or the United States Export Administration Act of 1979, or the effective Regulations of the United States Department of Commerce promulgated under either act.

It is understood further that the Authority in awarding a contract does so in material reliance upon the promise and representation made by the Contractor in the foregoing paragraph and that such contract shall be rendered forfeit and void by the State Comptroller if subsequent to the bid execution date, the Contractor or such owned or affiliated person, firm, partnership or corporation has been convicted of a violation of the aforesaid Acts or Regulations or has been found upon final determination of the United

States Commerce Department or any other appropriate agency of the United States to have violated such Acts or Regulations.

The Contractor agrees to and shall notify the Chief Engineer, Department of Engineering and the Director of the Office of Construction Management and the Director of State Expenditures in the Office of the State Comptroller of any such conviction or final determination of violation within five (5) days thereof.

ARTICLE 15. CERTIFICATION OF STATE FINANCE LAW SECTIONS 139-J AND 139-K. By execution of this agreement the Contractor certifies that all information provided with respect to New York State Finance Law Section 139-j and Section 139-k is complete, true and accurate.

Contract Number:

In addition to the acceptance of this contract, I also certify that original copies of this signature page will be attached to all other exact copies of this contract.

IN-WITNESS WHEREOF, the parties hereto have executed this agreement on the day and year first above written.

By: _____
Chief Engineer

_____
Date

_____
Contractor

Approved as to form

Approved:

Thomas P. DiNapoli
State Comptroller

_____
New York State Attorney General

By: _____

Date: _____

(Acknowledgment by individual contractor)

STATE OF NEW YORK

COUNTY OF _____ ss.:

On this _____ day of _____, 201__,
before me personally came _____ to me known and known to me to be the person described in and who executed the foregoing instrument, and acknowledged that he executed the same.

_____
Notary Public County

(Acknowledgment by co-partnership contractor)

STATE OF NEW YORK

COUNTY OF _____ ss.:

On this _____ day of _____, 201__
before me personally came and appeared _____ to me known and known to me to be the person who executed the above instrument, who, being sworn by me, did for himself depose and say that he is a member of the firm of _____ consisting of himself and _____ and that he executed the foregoing instrument in the firm name of _____ and that he had authority to sign same, and he did duly acknowledge to me that he executed the same as the act and deed of said firm of _____, for the uses and purposes mentioned therein.

_____
Notary Public County

(Acknowledgement of a Corporation)

STATE OF NEW YORK

COUNTY OF _____ ss.:

On this _____day of _____, 201__,
before me personally came _____, to me known and known to me to be the person who executed the above instrument, who being duly sworn by me, did depose and say that he/she resides in _____, that he/she is the _____ of _____, the corporation described in and which executed the above instrument, and that he/she signed his/her name thereto on behalf of said Corporation by order of the Board of Directors of said Corporation.

_____
Notary Public