PROPOSAL

FOR

TAS 16-23B D214479

BRIDGE REPLACEMENTS AT
I-90 OVER CSX RAILROAD, M.P. 284.74
AND
I-90 OVER VINE STREET. M.P. 284.80

BIN 5510170 MP 284.74
BIN 5510180 MP 284.90

BOOK 1 OF 1

THIS BOOK CONTAINS SPECIFICATIONS AND
BID PROPOSAL WORKSHEETS.

SUBMITTED IN ACCORDANCE WITH THE NEW YORK STATE DEPARTMENT OF TRANSPORTATION STANDARD SPECIFICATIONS OFFICIALLY ADOPTED SEPTEMBER 1, 2016 EXCEPT AS MODIFIED IN THE PLANS AND/OR PROPOSAL AND ANY CHANGES WITH ARTICLE 2, TITLE 9 OF THE PUBLIC AUTHORITIES LAW.

LETTING OF

NOVEMBER 23, 2016

11:00 A.M.

NEW YORK STATE OF OPPORTUNITY. | Thruway Authority | Canal Corporation

200 Southern Blvd., Albany, NY 12209

NOTICE
TO
BIDDERS

In addition to the bid deposit requirement, this Proposal shall be accompanied by a Statement of Surety's Consent on the form furnished by the Authority. (See last page).

BIDDERS ARE SUBJECT TO LOSS OF BID DEPOSIT FOR FAILURE TO OBTAIN PROPER BONDING.

Thruway Authority/Canal Corporation
Designated Contacts

Pursuant to NYS Finance Law Sections 139-j and 139-k, the following people are the designated contacts for this procurement process:

For all procurement contract process related questions:

- Michael W. Doyle
  Office of Capital Program and Contracts Management
  (518) 436-2902

For all technical or engineering related questions:

- David T. Vosburgh
  Project Designer
  (518) 436-2709
  David.Vosburgh@thruway.ny.gov

For more information about NYS Finance Law Sections 139-j and 139-k, please see the New York State Thruway Authority / Canal Corporation Guidelines for Lobbying included in this Proposal.

NEW YORK STATE
THRUWAY AUTHORITY

NOTICE TO BIDDERS

Sealed bids must be hand delivered, or delivered by first class mail, USPS Express or Priority Mail, or overnight delivery service (e.g., FedEx, UPS) to the New York State Thruway Authority Headquarters Building, at the following address only: New York State Thruway Authority, 200 Southern Boulevard Albany, NY 12209.

Sealed bids should not be sent or delivered to any other address or location, and the Authority is not responsible for any late deliveries or misdirected bids.

Regardless of the delivery method selected, all sealed bids must be delivered by 11:00 AM, on Wednesday, November 23, 2016, where they will be opened publicly and read aloud. Any bids sent or delivered to an address or location other than the one specified above, or received after this time, will not be accepted.

Contract TAS 16-23B/D214479 Bridge Replacements at I-90 Over CSX Railroad, MP 284.74 and I-90 Over Vine Street, MP 284.80 in Syracuse Division in Onondaga County in accordance with the Plans and Specifications.

Your bid must be secured with either a Bid Bond or a Bid Deposit. A Bid Bond must be in the amount of 25% of the total bid and must be on the Authority's Bid Bond Form (TA-44117) which is included in the Proposal. A Bid Deposit must be a certified check or cashier's check made payable to the New York State Thruway Authority in the amount of **$1,500,000.00.**

Plans, proposals, and information on how to download Contract Bid Data are available on the Authority's Website at www.thruway.ny.gov.

SPECIAL NOTE

The New York State Thruway Authority has discontinued the practice of reproducing and furnishing full-size and half-size plans to Contractors after contract award. Contractors shall be responsible for their own hard copies of plans and proposals at no additional cost to the Authority.

New York State Can Help You Secure Surety Bonding

The NYS Surety Bond Assistance Program (NYSBAP) provides technical and financial assistance to help contractors secure surety bonding. Contractors may be eligible to receive a guarantee of up to 30% to secure a surety bond line, bid bond or a performance and payment bond on State projects. Training is also available to contractors requiring technical support on how to become bond-ready. For more information and to fill out a NYSBAP application, visit http://esd.ny.gov/BusinessPrograms/BondingAssistance.html or contact Ms. Huey-Min Chuang at Empire State Development at 212-803-3238 or BAP@esd.ny.gov.

SPECIAL NOTE
REQUEST FOR INFORMATION (RFI)

A **request for information (RFI)** is a written process used to clarify a detail, specification, or note in the contract documents, provide notification of a possible error or omission, or request a minor modification due to possible unforeseen issues that may occur during construction. During the period between project advertisement and award of contract, the Contractor shall submit all RFIs to the appropriate "Designated Contact" listed in the Proposal. The Contractor's RFI to Engineering Design shall follow the same general format as the Authority's Contractor Request for Information Form (TA-N44136-9) used during construction. The form shall be filled out as completely and accurately as possible and numbered sequentially, if needed. Any supporting information that may help describe the issue more clearly, as well as any suggestions or recommendations for possible resolution, should be provided.

TA-N44136-9 (12/2012)

CONTRACTOR REQUEST FOR INFORMATION

New York State Thruway Authority • New York State Canal Corporation

Purpose: This form is completed by a Project's Construction Supervisor upon receipt of a Contractor's request for information when further information is needed to respond to the Contractor's request.

INSTRUCTIONS:

- *Construction Supervisor:* Complete Section I upon receiving the Contractor's written request for information. This form, along with the Contractor's request, is forwarded to the appropriate Thruway Bureau (Design or Maintenance) with a copy being sent to the Office of Construction Management's Liaison.
- *Receiving Thruway Bureau:* Completes Section II, providing the requested information, and returns the form to the Construction Supervisor with a copy being sent to the Office of Construction Management's Liaison.

Section I Request for Information

Construction Supervisor	Phone No.	RFI No.
	( ) -	

Project Description	Contract TA No.
	TA
	Contract D No.
	D

Trades (if applicable)	Contract Drawing No.	Specifications Section	Contractor's Reference No.

Request Date	Requested Response Date	Requested By	Company

Detailed Description of Issue (use additional sheets if necessary)

Proposed Solution (use additional sheets if necessary)

Section II Request Response

Receipt Date	Response Date	Response By	Thruway Bureau

Response (use additional sheets if necessary)

Attached Document(s) Description

SAMPLE FORMAT

New York State Thruway Authority

Contract No. TAS 16-23B

TABLE OF CONTENTS

PROJECT INFORMATION

Proposal Title Sheet 1
Pre-Award Notice / Contract Award 2
Pre-Bid Inspection / Preconstruction Meeting / Withdrawal of Bid 3
Quantity Sheet Summary for Proposal 4
"Be Prepared To Stop" Signing for Stationary Work Zones 10
"Uneven Lanes" Signing 11
Work to be Done 12
Schedule and Suspension of Work 13
Traffic Management Tables 17
Project Notes 19
Specialty Items 43
Supplemental Information Available To Bidders 44

REVISIONS TO NYSDOT STANDARD SPECIFICATIONS

NYSTA Addendum to the Standard Specifications 45

SPECIAL SPECIFICATIONS

Special Note — Special Specification Pay Item Numbers 46
Project Special Specifications 47

SPECIAL NOTES

Confidential Information 104
Control of Materials 107
Availability of Electronic Bid Data 108
Requirements for Contractor's Utilization of Areas Outside of the Right-of-Way 109
Compliance with State Pollutant Discharge Elimination System (SPDES) Regulations 110
SPDES General Permit 111
Diesel Emission Reduction Act (DERA) Regulatory Compliance 112
Green Construction Requirements 113
"Generator Knowledge" for Disposal of Treated Wood 116
Forest Insect Disease Control 117
Marker Relocation During Construction 119
Typical Bird / Bat Waste Information 120
Project Special Notes 121

AFFIRMATIVE ACTION REQUIREMENTS

Goals for Disadvantaged/Minority/Women's Business Enterprise (D/W/MBE) Participation 141
Equal Employment Opportunity Requirements – State 142
Training Special Provisions – State Funded 149
Non-FA Affirmative Action Requirements 154
Progress Payments – OEOC Reports 159
Utilization Plan for All Subcontractors (TA-W1022-9) 160
Instructions for the Manual Completion of the Employment Utilization Report (TA-W1017-9) 162
Monthly Employment Utilization (TA-W1017-9) 164
Payments to D/M/WBE Subcontracting Firms (TA-W1023-9) 165

STATE WAGE RATE INFORMATION

Wage Rates / Special Notice to Bidders in Relation to Overtime Dispensation 166
Special Note: State Prevailing Wage Rates 167
State Wage Rates 168

SAMPLE AGREEMENT

New York State Thruway Authority Sample Agreement 196

BID PROPOSAL

Itemized Proposal 205
Non-Collusive Bidding Certification 240
Iran Divestment Certification 241
MacBride Fair Employment Principals Certification 242
Signature Sheet 243
Bid Bonds 244
New York State Thruway Authority Guidelines for Lobbying 246
Disclosure of Prior Non-Responsibility Determinations 249
Certificate of Compliance (TA-W2111-9) 250
Amendment Acknowledgment 251
Statement of Surety's Consent 252

PROJECT INFORMATION

TAS 16-23B
D214479

NEW YORK STATE THRUWAY AUTHORITY

DEPARTMENT OF ENGINEERING

PROPOSAL ESTIMATE FOR

BRIDGE REPLACEMENTS

AT

I-90 OVER CSX RAILROAD, MP 284.74 AND I-90 OVER VINE STREET, MP 284.80

IN THE

SYRACUSE DIVISION

OF THE

NEW YORK STATE THRUWAY

IN

ONONDAGA COUNTY

TYPE	LIMITS
BRIDGE REPLACEMENTS	I-90 OVER CSX RAILROAD, MP 284.74 – 106' PLUS ADVANCE SIGNING I-90 OVER VINE STREET, MP 284.80 – 106' PLUS ADVANCE SIGNING

DEPOSIT REQUIRED **$1,500,000.00**

COMPLETION DATE **December 28, 2018**

PRE-AWARD NOTICE

A Pre-Award Meeting has not been scheduled for this project. If a Pre-Award Meeting is deemed necessary, notice of the date and time will be provided.

To assist the Authority in its award process, the successful low bidder must furnish the following items upon request:

1. A current New York State Uniform Contracting Questionnaire (NYSUCQ) CCA-2 form must be on file;

2. A list of current contracts giving the firm or agency for which they are being performed, the name and phone number of someone therein familiar with the contractor's work, the contract amount, and percent of completion;

3. Pre-Award Project Schedule;

4. Documentation of the actions taken to comply with the Minority/Women's Business Enterprise Utilization goals (Non-Federal), or Disadvantaged Business Enterprise goals (Federal) as defined in the Proposal;

5. A "Schedule of Participation of Minority/Women's Business Enterprise" (Form TA-1022), or Disadvantaged Business Enterprise" (Form TA-1022F);

6. AAPHC-89 Approval to Subcontract.

Contract Documents will be supplied with the Authority's notice to the successful low bidder and must be executed and returned to the Authority within ten (10) days of receipt.

If a Pre-Award Meeting is held, it is requested that the Project Superintendent be present. The Contractor should be prepared to provide, upon request by the Authority, information regarding, among other things, the following:

1. Use of subcontractors, including who they will be and what items of work they will perform;

2. Suppliers and manufacturers;

3. Traffic control and safety;

4. Any anticipated problems that could affect the progression of the project.

CONTRACT AWARD

The award process cannot begin until the executed Contract Documents have been returned to the Authority and the successful Low Bidder has provided acceptable documentation with regard to his actions taken to comply with the M/WBE goals of this Contract or DBE Goals for Federally Aided Contracts.

ALL BIDDERS

PRE-BID INSPECTION

The prospective bidder must have in its possession the Contract Plans/Proposal and a Work Permit for identification purposes when conducting a pre-bid inspection of the Thruway/Canal facility.

The prospective bidder shall inform the appropriate Division Point of Contact (listed below) prior to visiting the site and shall strictly comply with all instructions and requirements.

- **New York State Thruway Authority Work Permit Application (TA-W41338)** is available at http://www.thruway.ny.gov/business/realproperty/index.html. The application shall be submitted to the appropriate Thruway Authority Division Permit Coordinator as indicated on page 2 of the application. The fee is waived for this Pre-Bid Inspection.

Division	Point of Contact	Phone
New York	Gail Winters	(845) 918-2510
Albany	Gary Raylinsky	(518) 436-2710
Syracuse	Jay Holbrook	(315) 438-2420
Buffalo	Paul Zakrzewski	(716) 635-6218

- **New York State Canal Corporation Canal Permit Application (TA-W99072)** is available at http://www.canals.ny.gov/business/realproperty/index.html#permits. The application shall be submitted to the appropriate Division Canal Permit Engineer as indicated on page 2 of the application. The fee is waived for this Pre-Bid Inspection.

Division	Point of Contact	Phone
Eastern - Albany Office	Garret O'Connor	(518) 471-5033
Western - Syracuse Office	Janet Deordio	(315) 438-2389
Western - Buffalo Office	Kevin Kerins	(716) 635-6252

Provisions of Section 107-05, Equipment Safety Procedures, contained in the Contract Proposal shall apply to all Pre-Bid Inspectors and shall be strictly adhered to while performing the pre-bid inspection.

PRECONSTRUCTION MEETING

A Pre-Construction Meeting will be held prior to the start of construction. The time, date and location will be coordinated by the Division Construction Engineer who will provide this information to the successful low bidder as soon as it is available.

WITHDRAWAL OF BID

A Contractor may at any time, upon at least fifteen (15) days written notice, withdraw its bid on a date sixty (60) days after bid opening or thirty (30) days after the properly executed contract documents have all been received by the Authority, whichever is later. The bid bond, bid deposit, and/or performance bond shall remain in effect until such period of written notice has expired provided the contract has not been approved by the Office of the State Comptroller in the interim.

The Contractor and the Authority may agree in writing to extend the date upon which the bid may be withdrawn if the contract has not been approved by the Office of the State Comptroller.

QUANTITY SHEET SUMMARY FOR PROPOSAL

CONTRACT ID: D214479 PROJECT(S): S52952

CONTRACTOR :_____

ITEM NUMBER	DESCRIPTION	UNIT	QUANTITY
201.07	CLEARING AND GRUBBING	ACRE	0.620
202.120001	REMOVING EXISTING SUPERSTRUCTURES	LS	1.000
202.120002	REMOVING EXISTING SUPERSTRUCTURES	LS	1.000
202.19	REMOVAL OF SUBSTRUCTURES	CY	1653.000
203.02	UNCLASSIFIED EXCAVATION AND DISPOSAL	CY	17389.000
203.03	EMBANKMENT IN PLACE	CY	11890.000
203.07	SELECT GRANULAR FILL	CY	1788.000
203.21	SELECT STRUCTURE FILL	CY	1114.000
204.01	CONTROLLED LOW STRENGTH MATERIAL (CLSM)	CY	99.000
206.01	STRUCTURE EXCAVATION	CY	12899.000
206.0201	TRENCH AND CULVERT EXCAVATION	CY	5021.000
206.05	TEST PIT EXCAVATION	EACH	4.000
207.20	GEOTEXTILE BEDDING	SY	631.000
207.26	PREFABRICATED COMPOSITE STRUCTURAL DRAIN	SY	366.000
207.27	PREFABRICATED COMPOSITE INTEGRAL ABUTMENT DRAIN	SY	313.000
209.1106	CHECK DAM, STONE, PERMANENT	EACH	5.000
209.13	SILT FENCE-TEMPORARY	LF	5200.000
209.160103	PIPE SLOPE DRAIN, 12" - TEMPORARY	EACH	1.000
209.1701	DRAINAGE STRUCTURE INLET PROTECTION, SILT FENCE - TEMPORARY	LF	131.000
209.1705	DRAINAGE STRUCTURE INLET PROTECTION, EXCAVATED- TEMPORARY	LF	128.000
211.10	GROUTED TIEBACKS (TEMP)	EACH	12.000
304.12	SUBBASE COURSE, TYPE 2	CY	19213.000
304.15	SUBBASE COURSE, OPTIONAL TYPE	CY	150.000
402.000013	PLANT PRODUCTION QUALITY ADJUSTMENT TO HMA ITEMS	QU	2245.000
402.125203	12.5 F2 TOP COURSE HMA, 50 SERIES COMPACTION	TON	3603.000
402.128903	12.5 F9 TOP COURSE HMA, SHOULDER COURSE,80 SERIES COMPACTION	TON	3466.000
402.255903	25 F9 BINDER COURSE HMA, 50 SERIES COMPACTION	TON	5238.000
402.258903	25 F9 BINDER COURSE HMA, 80 SERIES COMPACTION	TON	5163.000
402.376903	37.5 F9 BASE COURSE HMA, 60 SERIES COMPACTION	TON	13889.000
402.378903	37.5 F9 BASE COURSE HMA, 80 SERIES COMPACTION	TON	13527.000
407.0102	DILUTED TACK COAT	GAL	8095.000

QUANTITY SHEET SUMMARY FOR PROPOSAL

CONTRACT ID: D214479 PROJECT(S): S52952

CONTRACTOR :_____

ITEM NUMBER	DESCRIPTION	UNIT	QUANTITY
490.30	MISCELLANEOUS COLD MILLING OF BITUMINOUS CONCRETE	SY	12088.000
503.01040010	CEMENT CONCRETE FOUNDATION FOR PAVEMENT, UNREINFORCED, CLASS F (SPECIAL AREAS)	CY	362.000
551.010057	STEEL H-PILES (HP 10X57)	LF	4992.000
551.13	FURNISHING EQUIPMENT FOR DRIVING PILES	LS	1.000
551.14	DYNAMIC PILE TESTING	EACH	8.000
552.17	SHIELDS AND SHORING	SF	45511.000
552.2001	HOLES IN EARTH FOR SOLDIER PILE AND LAGGING WALL	LF	1010.000
552.2002	HOLES IN EARTH FOR SOLDIER PILE AND LAGGING WALL	LF	1850.000
552.2101	ROCK SOCKETS FOR SOLDIER PILE AND LAGGING WALL	LF	230.000
552.2201	SOLDIER PILES FOR SOLDIER PILE AND LAGGING WALL	LF	732.000
552.2202	SOLDIER PILES FOR SOLDIER PILE AND LAGGING WALL	LF	1010.000
552.2203	SOLDIER PILES FOR SOLDIER PILE AND LAGGING WALL	LF	2080.000
552.2204	SOLDIER PILES FOR SOLDIER PILE AND LAGGING WALL	LF	244.000
552.230201	UNTREATED WOOD LAGGING FOR SOLDIER PILE AND LAGGING WALL	SF	1596.000
552.230202	UNTREATED WOOD LAGGING FOR SOLDIER PILE AND LAGGING WALL	SF	3816.000
552.230203	UNTREATED WOOD LAGGING FOR SOLDIER PILE AND LAGGING WALL	SF	5752.000
552.230204	UNTREATED WOOD LAGGING FOR SOLDIER PILE AND LAGGING WALL	SF	418.000
552.230303	PRECAST CONCRETE PANEL LAGGING FOR SOLDIER PILE AND LAGGING WALL	SF	5752.000
553.020001	COFFERDAMS (TYPE 2)	EACH	1.000
554.3001	GEOSYNTHETIC REINFORCED EARTH SYSTEM WALL WELDED WIRE FORMS	SF	1212.000
555.0105	CONCRETE FOR STRUCTURES, CLASS A	CY	4.000
555.09	CONCRETE FOR STRUCTURES, CLASS HP	CY	931.000
556.0203	GALVANIZED BAR REINFORCEMENT FOR STRUCTURES	LB	73127.000
556.03	STUD SHEAR CONNECTORS FOR BRIDGES	EACH	15360.000
557.0109	SUPERSTRUCTURE SLAB WITH INTEGRAL WEARING SURFACE - BOTTOM FORMWORK REQUIRED - TYPE 9 FRICTION	SY	2880.000
557.2009	STRUCTURAL APPROACH SLAB WITH INTEGRAL WEARING SURFACE -TYPE 9 FRICTION	SY	1269.000
558.02	LONGITUDINAL SAWCUT GROOVING OF STRUCTURAL SLAB SURFACE	SY	3864.000
558.5001 25	MEMBRANE WATERPROOFING SYSTEM FOR STRUCTURAL SLABS	SF	421.000

QUANTITY SHEET SUMMARY FOR PROPOSAL

CONTRACT ID: D214479 PROJECT(S): S52952

CONTRACTOR :_____

ITEM NUMBER	DESCRIPTION	UNIT	QUANTITY
559.18960118	PROTECTIVE SEALING OF STRUCTURAL CONCRETE ON NEW BRIDGE DECKS AND BRIDGE DECK OVERLAYS	SF	29238.000
564.510001	STRUCTURAL STEEL	LB	562293.000
564.510002	STRUCTURAL STEEL	LB	567092.000
565.2024	TYPE E.B. FIXED BEARING (169 - 225 KIPS)	EACH	16.000
565.2034	TYPE E.B EXPANSION BEARING (169 TO 225 KIPS)	EACH	16.000
568.70	TRANSITION BRIDGE RAILING	LF	168.000
569.04	SINGLE SLOPE (HALF SECTION) CONCRETE BRIDGE BARRIER	LF	441.000
580.01	REMOVAL OF STRUCTURAL CONCRETE	CY	1.000
586.0310 25	DRILLING AND GROUTING BOLTS OR REINFORCING BARS CHEMICALLY CURING GROUT WITH PULLOUT TESTS	EACH	144.000
603.6001	REINFORCED CONCRETE PIPE CLASS III, 12 INCH DIAMETER	LF	33.000
603.6002	REINFORCED CONCRETE PIPE CLASS III, 15 INCH DIAMETER	LF	257.000
603.6003	REINFORCED CONCRETE PIPE CLASS III, 18 INCH DIAMETER	LF	191.000
603.6005	REINFORCED CONCRETE PIPE CLASS III, 24" DIAMETER	LF	190.000
603.6007	REINFORCED CONCRETE PIPE CLASS III. 30 INCH DIAMETER	LF	76.000
603.6101	REINFORCED CONCRETE PIPE, CLASS IV, 12 INCH DIAMETER	LF	107.000
603.64080615	PRECAST CONCRETE BOX CULVERT (FILL HEIGHT = 2 FT OR GREATER 8 FOOT SPAN 6 FOOT RISE	LF	23.000
603.7305	RCP END SECTION, 24" DIAMETER	EACH	1.000
603.7307	REINFORCED CONCRETE PIPE END SECTIONS 30 INCH DIAMETER	EACH	1.000
603.9812	SMOOTH INTERIOR CORRUGATED POLYETHYLENE CULVERT AND STORM DRAIN 12 INCHES DIAMETER	LF	2618.000
604.06000006	TRENCH DRAIN SYSTEM	LF	3664.000
604.070301	ALTERING DRAINAGE STRUCTURES, LEACHING BASINS AND MANHOLES	EACH	2.000
604.300691	RECTANGULAR DRAINAGE STRUCTURE, TYPE "F" FOR PARALLEL BAR #11 PCB FRAME	LF	45.000
604.302091	RECTANGULAR DRAINAGE STRUCT TYPE T FOR PARALLEL #11 PCB FRAME	LF	222.000
605.1001	UNDERDRAIN FILTER TYPE 2	CY	744.000
605.1502	PERFORATED CORRUGATED POLYETHYLENE UNDERDRAIN TUBING, 6 INCH DIAMETER	LF	9147.000
605.1602	PERFORATED POLYVINYL CHLORIDE UNDERDRAIN PIPE, 6 INCH DIAMEER	LF	394.000
605.21015025	PRECAST CONCRETE HEADWALLS FOR 6" LATERAL OUTLET PIPES	EACH	7.000
606.100002	BOX BEAM GUIDE RAILING (SHOP BENT OR SHOP MITERED)	LF	80.000

QUANTITY SHEET SUMMARY FOR PROPOSAL

CONTRACT ID: D214479 PROJECT(S): S52952

CONTRACTOR :_____

ITEM NUMBER	DESCRIPTION	UNIT	QUANTITY
606.120101	BOX BEAM END PIECE	EACH	2.000
606.17	CORRUGATED BEAM MEDIAN BARRIER	LF	3740.000
606.24	ANCHORAGE UNITS FOR CORRUGATED BEAM MEDIAN BARRIER	EACH	2.000
606.2701	HPBO (MOD.) CORRUGATED BEAM GUIDERAILING	LF	4102.000
606.2703	ANCHORAGE UNIT FOR HPBO (MOD.) CORRUGATED BEAM GUIDE RAILING	EACH	2.000
606.3062	SINGLE-SLOPE CONCRETE HALF SECTION BARRIER (PRECAST)	LF	40.000
606.3403 25	END TERMINAL FOR 31 INCH HIGH HPBO (MOD) CORRUGATED BEAM GUIDE RAILING	EACH	2.000
606.71	REMOVING AND DISPOSING CORRUGATED BEAM GUIDE RAILING	LF	4110.000
606.72	REMOVING AND DISPOSING CORRUGATED BEAM MEDIAN BARRIER	LF	3610.000
606.7910	REMOVING AND DISPOSING ANCHORAGE UNITS FOR CORRUGATED BEAM GUIDE RAILING AND MEDIAN BARRIER	EACH	6.000
606.79100125	REMOVE AND DISPOSE END TERMINAL FOR CORRUGATED BEAM OR HPBO GUIDERAIL AND MEDIAN BARRIER SYSTEMS	EACH	2.000
607.0612 25	PROTECTIVE SCREENING (SNOW FENCE)	LF	282.000
607.3102	OPTIONAL CHAIN LINK FENCE, TYPE I WITH TOP TENSION WIRE 6' HIGH	LF	1284.000
608.020102	ASPHALT CONCRETE SIDEWALKS, DRIVEWAYS AND BICYCLE PATHS AND VEGETATION CONTROL STRIPS	TON	274.000
608.020112	PLANT PRODUCTION QUALITY ADJUSTMENT TO ITEM 608.020102	QU	14.000
609.0401	CAST-IN-PLACE CONCRETE CURB TYPE VF150	LF	114.000
610.1402	TOPSOIL- ROADSIDE	CY	2796.000
610.1601	TURF ESTABLISHMENT- ROADSIDE	SY	25415.000
610.19	WATERING VEGETATION	MGAL	8923.000
610.21	MOWING	SY	25415.000
619.01	BASIC WORK ZONE TRAFFIC CONTROL	LS	1.000
619.04	TYPE III CONSTRUCTION BARRICADE	EACH	36.000
619.08010225	REMOVE PAVEMENT MARKING STRIPES 6 INCH - EPOXY PAINT	LF	27520.000
619.10010225	INTERIM PAVEMENT MARKINGS STRIPES (EPOXY PAINT) 6"	LF	71160.000
619.100203	INTERIM PAVEMENT MARKINGS, SYMBOLS (REMOVABLE TAPE)	EACH	2.000
619.100303	INTERIM PAVEMENT MARKINGS, LETTERS (REMOVABLE TAPE)	EACH	2.000
619.111212	PORTABLE, VMS SIGN (PVMS) STANDARD SIZE - LINE OR CHAR MATRIX (LED) NO OPTIONAL EQUIPMENT SPEC, CELL COMMUN	CW	36.000
619.161401	MODIFY EXISTING TRAFFIC SIGNAL EQUIPMENT (TEMPORARY)	ELOC	3.000
619.161402	MODIFY EXISTING TRAFFIC SIGNAL EQUIPMENT (TEMPORARY)	ELOC	3.000

QUANTITY SHEET SUMMARY FOR PROPOSAL

CONTRACT ID: D214479 PROJECT(S): S52952

CONTRACTOR :_____

ITEM NUMBER	DESCRIPTION	UNIT	QUANTITY
619.161403	MODIFY EXISTING TRAFFIC SIGNAL EQUIPMENT (TEMPORARY)	ELOC	3.000
619.161404	MODIFY EXISTING TRAFFIC SIGNAL EQUIPMENT (TEMPORARY)	ELOC	3.000
619.161405	MODIFY EXISTING TRAFFIC SIGNAL EQUIPMENT (TEMPORARY)	ELOC	3.000
619.161406	MODIFY EXISTING TRAFFIC SIGNAL EQUIPMENT (TEMPORARY)	ELOC	3.000
619.161407	MODIFY EXISTING TRAFFIC SIGNAL EQUIPMENT (TEMPORARY)	ELOC	3.000
619.161408	MODIFY EXISTING TRAFFIC SIGNAL EQUIPMENT (TEMPORARY)	ELOC	3.000
619.1701	TEMPORARY CONCRETE BARRIER, (UNPINNED)	LF	5340.000
619.1703	TEMPORARY CONCRETE BARRIER, (PINNED)	LF	9819.000
619.1705	TEMPORARY CONCRETE BARRIER (STIFFENED WITH BOX BEAM)	LF	1126.000
619.1706 25	LINEAR DELINATION SYSTEM	LF	3101.000
619.24	NIGHTTIME OPERATIONS	LS	1.000
620.02	STONE FILLING (FINE)	CY	17.000
620.03	STONE FILLING (LIGHT)	CY	171.000
620.05	STONE FILLING (HEAVY)	CY	90.000
620.12 25	STAMPED CONCRETE SLOPE PROTECTION	SF	4752.000
623.12	CRUSHED STONE (IN-PLACE MEASURE)	CY	67.000
625.01	SURVEY OPERATIONS	LS	1.000
627.5014 08	CUTTING PAVEMENT	LF	465.000
635.04030225	RECESS DIAMOND GRINDING FOR INLAID PAVEMENT MARKINGS	LF	25333.000
637.03	CONCRETE CYLINDER CURING BOX	EACH	1.000
637.12 25	ENGINEERS FIELD OFFICE -TYPE 2	MNTH	24.000
645.61000125	INSTALL OVERHEAD SIGN PANELS (AUTHORITY SUPPLIED)	SF	12.000
646.0603 25	INSTALL DELINEATOR OR TENTH MILE MARKER 0N POST	EACH	64.000
646.0801 25	INSTALL SNOWPLOW MARKER, SINGLE UNIT	EACH	2.000
646.0802 25	INSTALL SNOWPLOW MARKER, DOUBLE UNIT	EACH	4.000
646.50 25	REMOVE AND DISPOSE OF DELINEATORS AND MARKERS	EACH	64.000
647.51	REMOVE AND DISPOSE SIGN PANEL, SIGN PANEL ASSEMBLY SIZE I (U NDER 30 SQUARE FEET)	EACH	1.000
649.2504 25	SHOULDER TREATMENT FOR ACCIDENT REDUCTION (STAR)	LF	22488.000
655.0902	PARALLEL BAR FRAME 11 PCB - PARALLEL BAR GRATE 11 PCB	EACH	46.000
685.1709 25	WHITE HIGHLY REFLECTORIZED TRIPLE DROP EPOXY PAVEMENT STRIPES 6 INCH WIDTH X 25 MILS	LF	14826.000
685.1710 25	YELLOW HIGHLY REFLECTORIZED TRIPLE DROP EPOXY PAVEMENT STRIPES 6 INCH WIDTH X 25 MILS	LF	11860.000

QUANTITY SHEET SUMMARY FOR PROPOSAL

CONTRACT ID: D214479 PROJECT(S): S52952

CONTRACTOR :_____

ITEM NUMBER		DESCRIPTION	UNIT	QUANTITY
697.0203	25	FIELD CHANGE ORDER (THRUWAY)	DC	760000.000
698.04		ASPHALT PRICE ADJUSTMENT	DC	29496.000
698.05		FUEL PRICE ADJUSTMENT	DC	15415.000
698.06		STEEL/IRON PRICE ADJUSTMENT	DC	1000.000
699.04	25	MOBILIZATION	LS	1.000

SS/BE PREPARED TO STOP SIGNING.dwg

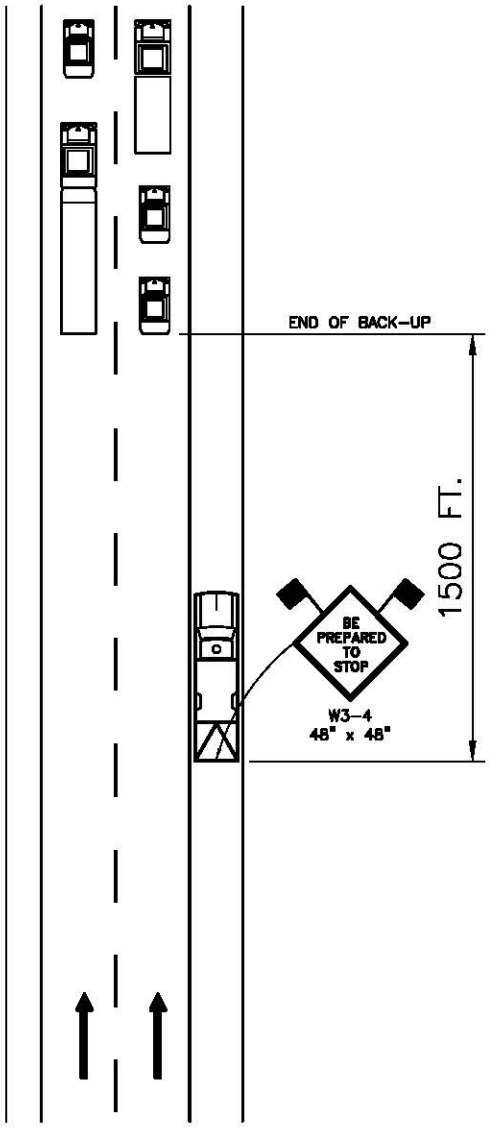

TWO-LANE SECTION

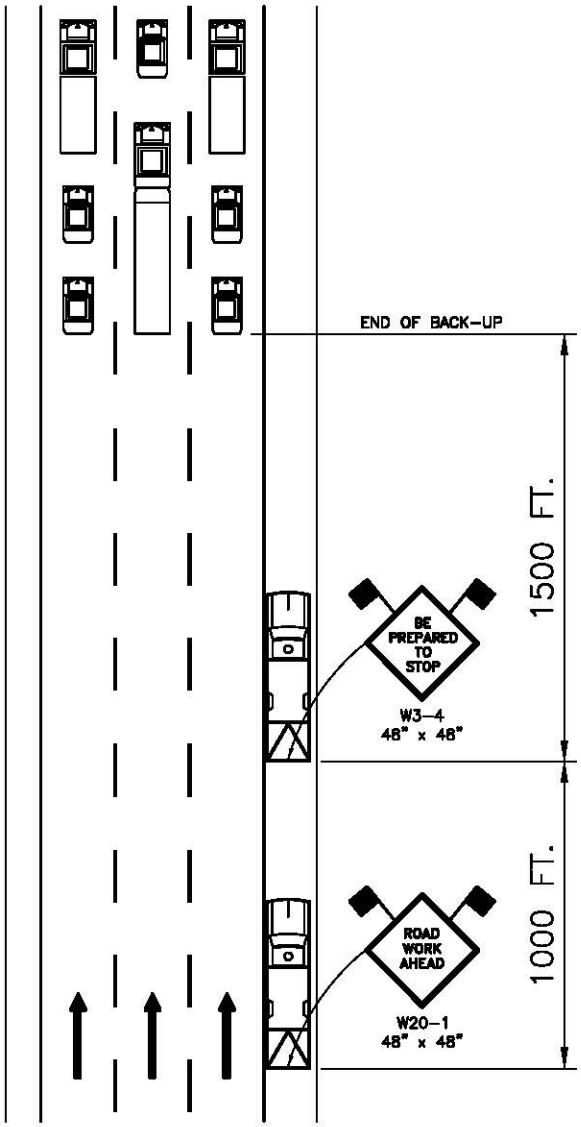

THREE-LANE SECTION

NOTE:

THE "BE PREPARED TO STOP" SIGN (W3-4) SHALL BE USED, WHERE CONDITIONS PERMIT, TO INFORM ONCOMING TRAFFIC OF A STOPPED OR VERY SLOW TRAFFIC CONDITION CAUSED BY STATIONARY CONSTRUCTION WORK ZONES. THE SIGN SHALL BE POSTED APPROXIMATELY 1500 FEET UPSTREAM OF THE END OF THE BACK-UP. WHEN THE END OF THE BACK-UP MOVES, THE SIGN SHALL ALSO BE MOVED TO MAINTAIN THAT SPACING.

IN SECTIONS WITH THREE OR MORE LANES, IF THE RESULTING LOCATION PLACES THE SIGN UPSTREAM OF THE FIRST WARNING SIGN FOR THE PROJECT, A "ROAD WORK AHEAD" SIGN (W20-1) SHALL BE PLACED APPROXIMATELY 1000 FEET IN ADVANCE OF THE "BE PREPARED TO STOP" SIGN.

A BACK-UP SHALL BE DEFINED AS A LINE OF STOPPED OR SLOWLY MOVING VEHICLES (25 MPH OR LESS) EXTENDING FROM THE BEGINNING OF THE TAPER TO THE FIRST WARNING SIGN OF THE WORK ZONE AND INVOLVING A DELAY OF AT LEAST 10 MINUTES.

THE "BE PREPARED TO STOP" SIGN IS NOT REQUIRED WHEN TRAFFIC BACK-UPS ARE CREATED UNDER NORMAL OPERATING CONDITIONS OUTSIDE THE LIMITS OF A WORK ZONE.

LEGEND

WORK VEHICLE (ATTENUATOR OPTIONAL)

WARNING FLAGS MINIMUM 18 x 18 IN.

NEW YORK STATE THRUWAY AUTHORITY

TITLE OF DRAWING

"BE PREPARED TO STOP" SIGNING FOR STATIONARY WORK ZONES

DATE:	DRAWING NUMBER:
1/09	BPS

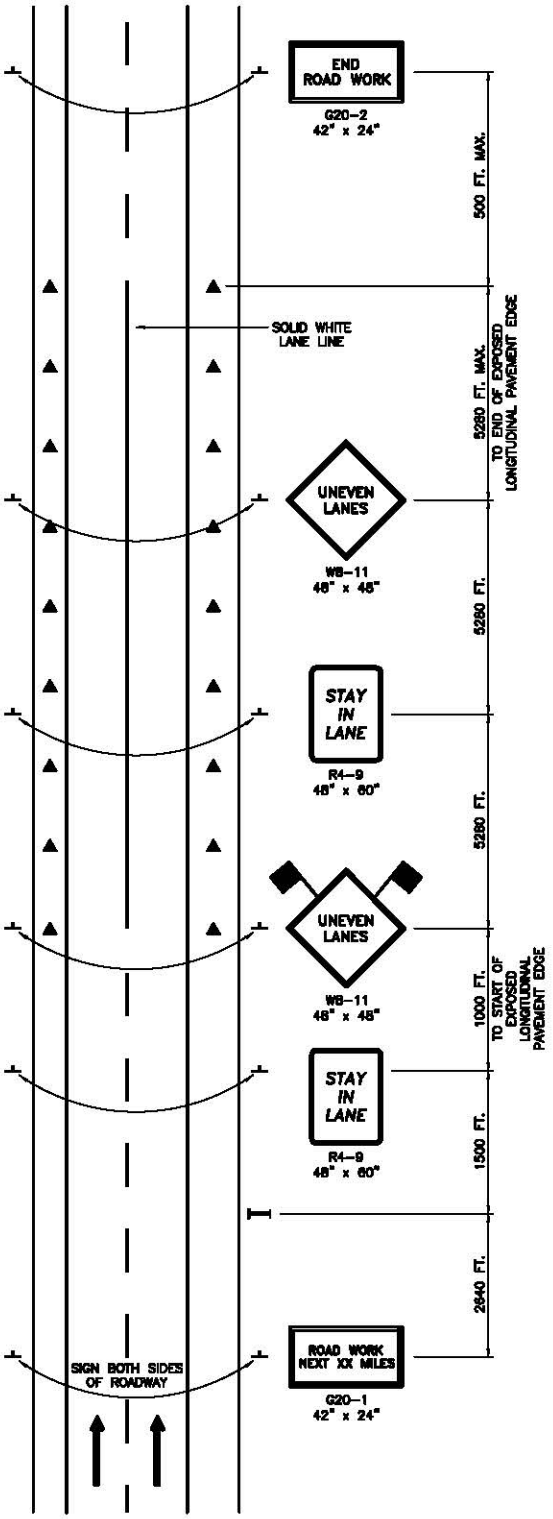

GENERAL:

THIS PLAN SHALL BE USED IN AREAS WHERE THERE IS AN EXPOSED LONGITUDINAL PAVEMENT EDGE CONDITION BETWEEN LANES WITH A DIFFERENCE IN ELEVATION OF 1/2 INCH TO 1 INCH.

NOTES:

1. THIS PLAN APPLIES TO TWO-, THREE-, FOUR-, AND FIVE-LANE SECTIONS.
2. THE PLAN SHOWN IS FOR AREAS WHERE THE USABLE LEFT SHOULDER/MEDIAN WIDTH IS AT LEAST 6 FEET. IN AREAS WHERE THE USABLE LEFT SHOULDER/MEDIAN WIDTH IS LESS THAN 6 FEET, LEFT SIDE SIGNS SHALL BE MOUNTED ON THE MEDIAN BARRIER. IF THE TOTAL MEDIAN WIDTH IS LESS THAN 6 FEET, LEFT SIDE SIGNS SHALL NOT BE REQUIRED.
3. THE "ROAD WORK NEXT XX MILES" (G20-1), "UNEVEN LANES" (W8-11), AND "END ROAD WORK" (G20-2) SIGNS SHALL BE BLACK ON FLUORESCENT ORANGE. THE REFLECTIVE BACKGROUND FOR THE "STAY IN LANE" (W4-9) SIGNS SHALL BE CLASS "B" OR "C" REFLECTIVE SHEETING.
4. THE PORTABLE VARIABLE MESSAGE SIGN (PVMS) SHALL SHALL DISPLAY THE TWO-PART MESSAGE: "UNEVEN LANES AHEAD / MCYCLES USE CAUTION."
5. "UNEVEN LANES" (W8-11) SIGNS SHALL BE ALTERNATAED WITH "STAY IN LANE" SIGNS FOR THE ENTIRE LENGTH OF THE EXPOSED LONGITUDINAL PAVEMENT EDGE CONDITION AT A SPACING NOT TO EXCEED 1 MILE. ADDITIONAL "UNEVEN LANES" (W8-11) SIGN(S) SHALL BE REQUIRED JUST BEYOND ANY ENTRANCE RAMP THAT TERMINATES WITHIN THE WORK ZONE SIGNING.
6. WHEN THE EXPOSED LONGITUDINAL PAVEMENT EDGE CONDITION NO LONGER EXISTS, THE "UNEVEN LANES" (W8-11) SIGNS AND "STAY IN LANE" (R4-9) SIGNS SHALL BE REMOVED OR COVERED AND THE PVMS SHALL BE DE-ACTIVATED OR PROGRAMMED TO DISPLAY ANOTHER APPROVED MESSAGE.

PAVEMENT MARKING NOTES:

1. LANE LINE PAVEMENT MARKINGS (BROKEN LINES) SHALL BE REPLACED WITH SOLID WHITE LINES FOR THE ENTIRE LENGTH OF THE EXPOSED LONGITUDINAL PAVEMENT EDGE CONDITION.
2. WHEN EDGE LINE PAVEMENT MARKINGS (SOLID LINES) ARE REMOVED AND NOT REPLACED AT THE END OF THE WORK SHIFT, TRAFFIC CONES, OR OTHER APPROVED CHANNELIZING DEVICE, SHALL BE USED TO DELINEATE THE PAVEMENT EDGE.

LEGEND

- TEMPORARY SIGN
- WARNING FLAGS MINIMUM 18 x 18 IN.
- PORTABLE VARIABLE MESSAGE SIGN (PVMS)
- TRAFFIC CONES @ 120 FT. SPACING

NEW YORK STATE THRUWAY AUTHORITY

TITLE OF DRAWING

"UNEVEN LANES" SIGNING

DATE:	DRAWING NUMBER:
1/09	UL

WORK TO BE DONE

The following is a general description of the work to be done under this Contract. This list is intended to give the Contractor a general description of the work involved in this Contract and is not a complete listing of all work to be done. All work shall be done in accordance with the Contract Documents even though not specifically mentioned in this list.

1. Install temporary erosion and sediment control systems prior to disturbing areas.
2. Remove existing bridges in three (separate) stages.
3. Replace existing Vine Street bridge with wider simple span integral abutment bridge.
4. Replace existing CSX bridge with wider conventional abutment on piles bridge.
5. Raise the profile of the bridges and approaches.
6. Relocate the utilities around the bridges.
7. Reconstruct highway approach pavement.
8. Provide work zone traffic control for stage construction.
9. Extend existing box culvert at Bloody Brook.
10. Construct permanent storm water controls.
11. Install temporary and permanent highway drainage.
12. Install temporary and permanent highway striping.
13. Relocate highway signs.
14. Remove temporary erosion and sediment control devices upon stabilization of all disturbed areas.

SCHEDULE AND SUSPENSION OF WORK

The New York State Thruway is a limited access, high-speed, high-volume highway. Traffic shall be maintained in accordance with the *Manual on Uniform Traffic Control Devices (MUTCD)*, the *Work Zone Traffic Control Plans*, the *Standard Specifications* Section 619 and the following provisions:

A. WORK ZONE TRAFFIC CONTROL

1. Lane closures on the Thruway shall only be allowed in accordance with the traffic management table(s) included in this proposal, unless indicated otherwise in the contract documents. If the traffic management table(s) indicate there are no lanes available for closure within a certain time period, work in shoulder closures (short-duration, mobile and short- or intermediate-term) will also be prohibited during this time. If more than one table is applicable to a work zone location, the most restrictive requirements shall be used. Traffic management tables do not guarantee lane closure availability; the requirements of Section B. *Work Restrictions* shall supersede these tables, when applicable.

2. Lane closures on the Thruway will be permitted for work site access, delivery of materials and equipment, and work operations. Personal vehicles will **NOT** be allowed to park along the Thruway or within lane closures on the Thruway at any time. During non-working hours, all equipment and materials shall be stored at least 30 feet from the edge of pavement (both mainline and ramps) or be protected by a physical barrier approved by the Engineer.

3. Lane closures will **NOT** be permitted during holiday periods or when unforeseen circumstances arise, as described in Section B. *Work Restrictions*, unless indicated otherwise in the contract documents.

4. Lane closures will **NOT** be permitted for the sole convenience of the Contractor. Lane closures will be permitted in order to protect traffic from an actual hazard, as determined by the Engineer.

5. Permanent lane closures will **NOT** be permitted for the duration of the contract.

6. Simultaneous closure of right and left shoulders will **NOT** be permitted unless indicated otherwise in the contract documents. Either right or left shoulder must remain clear and available through all work zones. The open shoulder shall not be used for the storage of vehicles, equipment, supplies or any other obstructions, or for any work activity.

7. Ramp closures will **NOT** be permitted, unless indicated otherwise in the contract documents. Access to interchanges, service areas and parking areas shall be maintained at all times.

8. Traffic will **NOT** be permitted to drive on milled pavement, unless indicated otherwise in the contract documents.

B. WORK RESTRICTIONS

1. **HOLIDAY PERIODS.** Lane closures will **NOT** be permitted during holiday periods, unless indicated otherwise in the contract documents. The Authority may permit work on Thruway facilities only if operations do not inhibit or distract traffic. Access to work sites from state and local roads will be permitted provided the municipality having jurisdiction for the road gives written permission. Holiday periods for this project shall be as follows:

SCHEDULE AND SUSPENSION OF WORK

*****SYRACUSE DIVISION*****

2016						
HOLIDAY	FROM			TO		
	TIME	DAY	DATE	TIME	DAY	DATE
Thanksgiving	7:00 a.m.	Wednesday	11/23/2016	7:30 a.m.	Monday	11/28/2016
Christmas/New Year's Day	Noon	Thursday	12/22/2016	6:30 a.m.	Tuesday	01/03/2017

2017						
HOLIDAY	FROM			TO		
	TIME	DAY	DATE	TIME	DAY	DATE
Dr. Martin Luther King, Jr. Day	Noon	Friday	01/13/2017	Noon	Tuesday	01/17/2017
Presidents' Day	Noon	Friday	02/17/2017	Noon	Tuesday	02/21/2017
Easter	6:00 p.m.	Thursday	04/13/2017	7:00 p.m.	Monday	04/17/2017
Memorial Day	7:30 a.m.	Friday	05/26/2017	8:00 p.m.	Monday	05/29/2017
Canada Day/Independence Day	Noon	Friday	06/30/2017	6:30 p.m.	Wednesday	07/05/2017
State Fair/Labor Day	7:30 a.m.	Thursday	08/24/2017	6:30 a.m.	Tuesday	09/04/2017
Columbus Day/ Thanksgiving (Canada)	7:30 a.m.	Monday	10/09/2017	8:00 p.m.	Monday	10/09/2017
Thanksgiving	7:00 a.m.	Wednesday	11/22/2017	10:00 p.m.	Sunday	11/26/2017
Christmas/New Year's Day	Noon	Thursday	12/21/2017	6:30 a.m.	Tuesday	01/02/2018

2018						
HOLIDAY	FROM			TO		
	TIME	DAY	DATE	TIME	DAY	DATE
Dr. Martin Luther King, Jr. Day	Noon	Friday	01/12/2018	Noon	Tuesday	01/16/2018
Presidents' Day	Noon	Friday	02/16/2018	Noon	Tuesday	02/20/2018
Easter	6:00 p.m.	Thursday	03/29/2018	7:00 p.m.	Monday	04/02/2018
Memorial Day	7:30 a.m.	Friday	05/25/2018	8:00 p.m.	Monday	05/28/2018
Canada Day/Independence Day	Noon	Thursday	06/28/2018	6:30 p.m.	Thursday	07/05/2018
State Fair/Labor Day	7:30 a.m.	Thursday	08/23/2018	6:30 a.m.	Tuesday	09/04/2018
Columbus Day/ Thanksgiving (Canada)	7:30 a.m.	Monday	10/08/2018	8:00 p.m.	Monday	10/08/2018
Thanksgiving	7:00 a.m.	Wednesday	11/21/2018	10:00 p.m.	Sunday	11/25/2018
Christmas/New Year's Day	Noon	Thursday	12/20/2018	6:30 a.m.	Wednesday	01/02/2019

2. Proposed lane closure schedules shall be submitted to the Engineer for review and approval at least one week in advance of the earliest closure.

3. The Contractor shall **NOT** be allowed to establish any lane closures during periods of inclement weather, wet or icy pavement, reduced visibility, traffic accident, emergency, or if the lane closure is causing excessive delay to the public. The Authority reserves the right to alter any lane closure and/or direct the Contractor to immediately remove a lane closure during such circumstances. The Authority shall be the sole judge of when conditions warrant these lane closure restrictions, and such restrictions will not entitle the Contractor to file a claim for additional compensation.

SCHEDULE AND SUSPENSION OF WORK

4. **SYRACUSE STATE FAIR 2017:** Lane closures will **NOT** be permitted from 7:30 a.m. Thursday, August 24, 2017 through 6:30 a.m. Tuesday, September 5, 2017.

   SYRACUSE STATE FAIR 2018: Lane closures will **NOT** be permitted from 7:30 a.m. Thursday, August 23, 2018 through 6:30 a.m. Tuesday, September 4, 2018.

5. **WINTER SHUTDOWN.** A winter shutdown shall be in effect from 3:00 p.m. **November 15** to 6:00 a.m. **April 1**. During this period, the Contractor shall **NOT** be permitted to have lane closures. All temporary tape lines shall be removed, temporary concrete barrier shall be set in its winter shutdown location, and all traffic shall be re-established to its pre-construction configuration on permanent alignment. Mobilization for the following construction season may begin prior to **April 1** with permission from the Authority.

6. The Contractor shall have 45 calendar days to replace the Shoulder Treatment for Accident Reduction (STAR) groove pattern where more than 1,500 contiguous feet have been removed by other contract work. The Contractor shall also ensure that STARs are installed prior to the official shutdown period, regardless of the 45 calendar day requirement or the length removed. Exceptions to this requirement are shoulders protected by temporary traffic control devices installed as part of a work zone traffic control plan developed in the contract documents or areas directly adjacent to detour pavement that will be used in subsequent phase(s) of the project.

   The Contractor shall consider these requirements when preparing bids and scheduling/sequencing the work for this contract. Failure to comply with the time frames specified will be considered a substantial deficiency in work zone traffic control and result in the non-payment for the Basic Work Zone Traffic Control Item for each calendar day during which STARs remain incomplete. Liquidated Damages will also be assessed at rates shown in Table 108-1 of the NYSDOT Standard Specifications.

7. Work restrictions may be modified if:

   a. The Contractor has received permission through the Engineer, from the Division Director or designee, to progress construction operations contained entirely behind temporary concrete barrier. There shall be no hauling of materials in or out of the work site during restricted periods, and open lane availability requirements shall not be violated or compromised.

   b. The Contractor has received permission through the Engineer, from the Division Director or designee, for temporary modification of the lane availability restrictions for performance of specific construction operations for a specific time period.

      NOTE: Such requests must be based on current traffic volumes which would permit the requested temporary modification with little probability of causing disruption or delay to the public.

      The Contractor shall include full explanation of the benefits to the Public and to the Authority, which would accrue in granting a temporary waiver for performance of the specific operations including calculations for any credit that may be offered. A contingency plan for action to be taken, should an unexpected traffic backup occur, shall accompany this presentation and will be one prime consideration in evaluating the request.

   c. The Contractor has received written authorization from the Division Director or designee to perform specific construction operations, violating the lane availability restrictions or other work restrictions during a specifically prohibited time period.

      NOTE: The Contractor shall submit a written request to the Authority's Division Director, with copy to the Engineer, for permission to perform specific construction operations at specific locations and

times, including a detailed explanation of why the work cannot be performed in conformance with the contract. Such requests must be received at the Division Office at least one full week before the date of the requested variance, and at least two full weeks should granting the waiver require making notice to the public regarding potential disruptions and delays.

If written authorization to work is granted by the Authority, the Contractor shall be strictly limited to those operations approved in the authorization. In making application for a waiver, the Contractor agrees that any waiver of restrictions granted by the Authority is exclusively for the Authority's benefit and purposes, and as such is subject to revocation without requirement for advance notice. Also, the disapproval of requests for waiver of contract requirements is not subject to administrative review or appeal under the contract.

8. **Vine Street Detour –** Vine Street will be permitted to be closed for a three (3) week period between the following dates for the listed construction stage:

Stage 2	between July 21, 2017 and August 30, 2017
Stage 3	between June 1, 2018 and June 29, 2018
Stage 4	between July 20, 2018 and August 29, 2018

C. GENERAL CONDITIONS

The Contract is to be completed on or before the specified completion date. If, for any reason, the Contractor fails to fulfill this obligation and requests an extension of time and the request is granted, the Authority, as a condition for extending the time of completion, shall retain the right to limit the Contractor's hours and/or days of work and/or impose conditions under which the work shall be performed in order that the traffic may not be unduly inconvenienced.

All the required liability and property damage insurance with the limits stated in this Proposal shall be effective and shall be continued in force throughout the life of this Contract including the stated periods of the suspension of the work.

The Contractor shall consider the foregoing requirement when preparing its "Schedule of Operations".

Exit 37 to 38 E

1300 Vphpl

LANES REQUIRED TO BE OPEN BY HOUR AND TIME OF DAY

SPRING SEASON March 1 through May 31

HR/DAY	MON	TUES	WEDS	THUR	FRI	SAT	SUN
0	1	1	1	1	1	1	1
1	1	1	1	1	1	1	1
2	1	1	1	1	1	1	1
3	1	1	1	1	1	1	1
4	1	1	1	1	1	1	1
5	1	1	1	1	1	1	1
6	1	1	1	1	1	1	1
7	2	2	2	2	2	1	1
8	2	2	2	2	2	1	1
9	1	1	1	1	2	1	1
10	1	1	1	1	2	1	1
11	1	1	1	1	2	1	1
12	1	1	1	1	2	1	2
13	2	1	1	1	2	1	2
14	2	1	1	2	2	1	2
15	2	1	2	2	2	1	2
16	2	1	2	2	2	1	2
17	2	1	2	2	2	1	2
18	1	1	1	1	2	1	2
19	1	1	1	1	1	1	1
20	1	1	1	1	1	1	1
21	1	1	1	1	1	1	1
22	1	1	1	1	1	1	1
23	1	1	1	1	1	1	1

LANES REQUIRED TO BE OPEN BY HOUR AND TIME OF DAY

SUMMER SEASON June 1 through September 15

HR/DAY	MON	TUES	WEDS	THUR	FRI	SAT	SUN
0	1	1	1	1	1	1	1
1	1	1	1	1	1	1	1
2	1	1	1	1	1	1	1
3	1	1	1	1	1	1	1
4	1	1	1	1	1	1	1
5	1	1	1	1	1	1	1
6	2	1	1	1	1	1	1
7	2	2	2	2	2	1	1
8	2	2	2	2	2	1	1
9	2	2	2	2	2	2	1
10	2	2	2	2	2	2	2
11	2	2	2	2	2	2	2
12	2	2	2	2	2	2	2
13	2	2	2	2	2	2	2
14	2	2	2	2	2	2	2
15	2	2	2	2	2	2	2
16	2	2	2	2	2	2	2
17	2	2	2	2	2	2	2
18	1	1	1	2	2	1	2
19	1	1	1	1	2	1	2
20	1	1	1	1	1	1	1
21	1	1	1	1	1	1	1
22	1	1	1	1	1	1	1
23	1	1	1	1	1	1	1

LANES REQUIRED TO BE OPEN BY HOUR AND TIME OF DAY

FALL SEASON September 16 through November 30

HR/DAY	MON	TUES	WEDS	THUR	FRI	SAT	SUN
0	1	1	1	1	1	1	1
1	1	1	1	1	1	1	1
2	1	1	1	1	1	1	1
3	1	1	1	1	1	1	1
4	1	1	1	1	1	1	1
5	1	1	1	1	1	1	1
6	1	1	1	2	1	1	1
7	2	2	2	2	2	1	1
8	2	2	2	2	2	1	1
9	2	1	2	2	2	1	1
10	2	1	2	2	2	2	2
11	2	1	2	2	2	2	2
12	2	1	2	2	2	2	2
13	2	1	2	2	2	1	2
14	2	2	2	2	2	1	2
15	2	2	2	2	2	1	2
16	2	2	2	2	2	1	2
17	2	2	2	2	2	1	2
18	1	1	1	1	2	1	2
19	1	1	1	1	1	1	1
20	1	1	1	1	1	1	1
21	1	1	1	1	1	1	1
22	1	1	1	1	1	1	1
23	1	1	1	1	1	1	1

LANES REQUIRED TO BE OPEN BY HOUR AND TIME OF DAY

WINTER SEASON December 1 through February 28

HR/DAY	MON	TUES	WEDS	THUR	FRI	SAT	SUN
0	1	1	1	1	1	1	1
1	1	1	1	1	1	1	1
2	1	1	1	1	1	1	1
3	1	1	1	1	1	1	1
4	1	1	1	1	1	1	1
5	1	1	1	1	1	1	1
6	1	1	1	1	1	1	1
7	2	2	2	2	2	1	1
8	2	2	2	2	2	1	1
9	1	1	1	1	1	1	1
10	1	1	1	1	1	1	1
11	1	1	1	1	1	1	1
12	1	1	1	1	1	1	2
13	1	1	1	1	2	1	2
14	1	1	1	1	2	1	1
15	1	1	1	1	2	1	1
16	1	1	1	1	2	1	1
17	1	1	1	1	2	1	1
18	1	1	1	1	1	1	1
19	1	1	1	1	1	1	1
20	1	1	1	1	1	1	1
21	1	1	1	1	1	1	1
22	1	1	1	1	1	1	1
23	1	1	1	1	1	1	1

Exit 37 to 38 W

1300 Vphpl

LANES REQUIRED TO BE OPEN BY HOUR AND TIME OF DAY

SPRING SEASON March 1 through May 31

HR/DAY	MON	TUES	WEDS	THUR	FRI	SAT	SUN
0	1	1	1	1	1	1	1
1	1	1	1	1	1	1	1
2	1	1	1	1	1	1	1
3	1	1	1	1	1	1	1
4	1	1	1	1	1	1	1
5	1	1	1	1	1	1	1
6	1	1	1	1	1	1	1
7	1	1	1	1	1	1	1
8	1	1	1	1	1	1	1
9	1	1	1	1	1	1	1
10	1	1	1	1	1	1	1
11	1	1	1	1	2	1	1
12	2	1	1	1	2	1	2
13	2	1	1	1	2	1	2
14	2	1	2	2	2	1	2
15	2	2	2	2	2	1	2
16	2	2	2	2	2	1	2
17	2	2	2	2	2	1	2
18	1	1	1	1	2	1	2
19	1	1	1	1	1	1	1
20	1	1	1	1	1	1	1
21	1	1	1	1	1	1	1
22	1	1	1	1	1	1	1
23	1	1	1	1	1	1	1

LANES REQUIRED TO BE OPEN BY HOUR AND TIME OF DAY

SUMMER SEASON June 1 through September 15

HR/DAY	MON	TUES	WEDS	THUR	FRI	SAT	SUN
0	1	1	1	1	1	1	1
1	1	1	1	1	1	1	1
2	1	1	1	1	1	1	1
3	1	1	1	1	1	1	1
4	1	1	1	1	1	1	1
5	1	1	1	1	1	1	1
6	1	1	1	1	1	1	1
7	1	1	1	1	1	1	1
8	1	1	1	1	1	1	1
9	1	1	1	1	2	2	1
10	2	1	2	2	2	2	2
11	2	2	2	2	2	2	2
12	2	2	2	2	2	2	2
13	2	2	2	2	2	2	2
14	2	2	2	2	2	2	2
15	2	2	2	2	2	2	2
16	2	2	2	2	2	2	2
17	2	2	2	2	2	2	2
18	2	1	2	2	2	1	2
19	1	1	1	1	2	1	2
20	1	1	1	1	1	1	1
21	1	1	1	1	1	1	1
22	1	1	1	1	1	1	1
23	1	1	1	1	1	1	1

LANES REQUIRED TO BE OPEN BY HOUR AND TIME OF DAY

FALL SEASON September 16 through November 30

HR/DAY	MON	TUES	WEDS	THUR	FRI	SAT	SUN
0	1	1	1	1	1	1	1
1	1	1	1	1	1	1	1
2	1	1	1	1	1	1	1
3	1	1	1	1	1	1	1
4	1	1	1	1	1	1	1
5	1	1	1	1	1	1	1
6	1	1	1	1	1	1	1
7	1	1	1	1	1	1	1
8	1	1	1	1	1	1	1
9	1	1	1	1	1	1	1
10	1	1	1	1	1	2	1
11	2	1	1	2	2	2	2
12	2	1	2	1	2	2	2
13	2	1	2	1	2	2	2
14	2	2	2	2	2	2	2
15	2	2	2	2	2	2	2
16	2	2	2	2	2	2	2
17	2	2	2	2	2	1	2
18	2	1	1	2	2	1	2
19	1	1	1	1	1	1	1
20	1	1	1	1	1	1	1
21	1	1	1	1	1	1	1
22	1	1	1	1	1	1	1
23	1	1	1	1	1	1	1

LANES REQUIRED TO BE OPEN BY HOUR AND TIME OF DAY

WINTER SEASON December 1 through February 28

HR/DAY	MON	TUES	WEDS	THUR	FRI	SAT	SUN
0	1	1	1	1	1	1	1
1	1	1	1	1	1	1	1
2	1	1	1	1	1	1	1
3	1	1	1	1	1	1	1
4	1	1	1	1	1	1	1
5	1	1	1	1	1	1	1
6	1	1	1	1	1	1	1
7	1	1	1	1	1	1	1
8	1	1	1	1	1	1	1
9	1	1	1	1	1	1	1
10	1	1	1	1	1	1	1
11	1	1	1	1	1	1	1
12	1	1	1	1	1	1	1
13	1	1	1	1	2	1	1
14	2	1	2	1	2	1	1
15	2	2	2	2	2	1	1
16	2	2	2	2	2	1	1
17	2	2	2	2	2	1	1
18	1	1	1	1	1	1	1
19	1	1	1	1	1	1	1
20	1	1	1	1	1	1	1
21	1	1	1	1	1	1	1
22	1	1	1	1	1	1	1
23	1	1	1	1	1	1	1

ADDITIONAL INSURED PARTIES

The following is a list of additional insured parties:

Town of Salina	CSX Railroad	G4S
Village of Liverpool	Onondaga County	
New York State Department of Transportation	Town of Liverpool	

NON-REVENUE PASS PLATES

Non-revenue pass plates will be furnished to the Contractor for use between:

Interchange 37, Electronic Parkway
Interchange 38, Liverpool – County Route 57

OTHER CONTRACTS

The Contractor will be required to coordinate work with other contractors and NYSTA maintenance forces. The following contracts have been let and may have work in progress during the duration of this contract:

CONTRACT NO.	DESCRIPTION	COMPLETION DATE
N/A	N/A	N/A

The following contracts are anticipated to be let and may have work in progress during the duration of this contract:

CONTRACT NO.	DESCRIPTION	COMPLETION DATE
TAS 17-8 D214544	1R Mill and Overlay, Drainage and Safety Improvements, Culvert Replacement and Misc. Work from MP 279.3 to MP 284.0 and Partial and Full Depth Repairs and Select Mill and Inlay from MP 284.1 to MP 289.3	October 2017

Onondaga County Project – Electronics Parkway 2018 – May not be able to use Alternate Vine Street Detour

U-TURNS/CROSSOVERS

The Contractor may be permitted to use official median openings for U-turns and crossovers with written authorization from Division Traffic Supervision. Official median openings are available at the following locations:

MP 282.50 and MP 286.0

U-turns and crossovers shall not be permitted at toll plazas or on interchange ramps. In addition, tractor trailer combinations are prohibited from U-turns at any location on the Thruway system. These vehicles must exit the Thruway system and re-enter for all direction changes. U-turns may be permitted within a maintenance facility, however, with prior approval from both Division Traffic Supervision and the Thruway Maintenance Supervisor 2 for that facility. All applicable traffic laws must be followed.

ENGINEER'S OFFICE AND CONTRACTOR'S FIELD OFFICE

The location of the Engineer's Office and Contractor's Field Office shall be determined during the Pre-Construction Meeting. The site shall be approved by the Engineer prior to placing the offices and the area shall be kept in a neat, clean condition at all times. The area shall not be used as a staging, storage, equipment or employee parking area.

G4S SECURE INTEGRATION, LLC INDEMNIFICATION

This project requires the Contractor to do work that may impact the Thruway Authority's fiber optic system.

The fiber optic system, comprised of features inclusive of telecommunications cables, lines, fibers, conduits, access manholes, pedestals, boxes and other fiber optic system components and devices, is operated and maintained by G4S Secure Integration, LLC (G4S).

The Contractor shall indemnify and hold harmless G4S, its officers, agents, employees and contractors from and against any and all injuries, claims, demands, judgments, liabilities or damages resulting from, or related to, the Contractor's negligence, gross negligence and/or willful misconduct in the performance of the work. The Contractor shall also indemnify and hold harmless G4S from claims by third parties having an agreement with G4S to use the fiber optic system. The Contractor shall include G4S as an additional insured party under the insurance requirements of this contract.

RAILROAD DATA FORM

1. Name of Railroad:

   (a) Owner CSX TRANSPORTATION
   (b) Owner CSX TRANSPORTATION

   (c) Operator CSX TRANSPORTATION

   (d) Trackage Rights _____

2. Class of Railroad MAIN LINE
   (Main Line, Branch Line, Local Siding, Industrial)

3. Line Name/Code ST. LAWRENCE

4. Milepost # QM-5.10

5. Number of Tracks 1

6. Number and Frequency of Trains:

   Freight 6 (trains per day)
   Frequency ONE OR MORE MOVEMENTS PER DAY

   Passenger _____ (trains per day)
   Frequency _____

7. Maximum Authorized Train Speed:

   Freight 25
   Passenger _____

CONSTRUCTION REQUIREMENTS

When performing work on, over or adjacent to CSX Transportation (CSXT) right-of-way or operations, the Contractor must abide by the current CSXT Special Provisions and the following additional requirements.

1. All construction related correspondence will be directed to Bergmann Associates, acting as the Construction Monitoring Representative (CMR) on behalf of CSXT, with the following contact and address:

   Michael Cooper
   Project Manager
   Bergmann Associates
   10-B Madison Avenue Ext.
   Albany, NY 12203
   (518) 862-0325

   Upon receipt of notification, the CMR will direct the Contractor to the local CSXT construction contact for the project.

2. The Contractor shall submit, including, but not limited to, the following construction procedures and documents. The Contractor shall obtain written acceptance from CSXT or their representative before proceeding with construction.

   a. Means and Methods – the Contractor shall develop a detailed submission indicating the progression of work with specific times when tasks will be performed during the project. This submission will include a walkthrough at which time CSXT personnel will be present. Work will not be permitted to commence until the Contractor has provided CSXT with a satisfactory plan that the project will be undertaken without scheduling, performance or safety related issues. Provide a listing of the anticipated equipment to be used, the location of all equipment to be used and insure a contingency plan of action is in place should a primary piece of equipment malfunction. All work in the vicinity of CSXT property that has the potential of affecting CSXT train operations must be submitted and approved by CSXT prior to work being performed. This submission will also include a detailed narrative discussing the coordination of project safety issues between the sponsor, Contractor, CSXT and the CMR. The narrative shall address project level coordination and day to day, specific work operations including equipment operations and temporary works.

   b. Erection Plans – Submittals must include detailed plans and procedures for all erection activities. The submission shall indicate the location and capacity of any proposed cranes, the estimated lifting loads and the connection devices (i.e. slings, shackles, etc.). All lifting equipment and connection devices shall have capacity for 150% of the actual lifting load. The factor of safety provided by the manufacturer in the lifting capacity charts shall not be considered in the 150% requirement. A registered Professional Engineer in the State of New York must seal all erection plans, calculations and procedures.

   c. Excavation and Shoring Procedures and Track Monitoring Procedures are required to be submitted to CSXT or the CMR in accordance with the CSXT Construction Submission Criteria. The CSXT Construction Submission Criteria should be referred to and complied with prior to the preparation of submissions, as it contains specific requirements that could impact the Contractor's material selection and methods or operations for work near the railroad. ***Revisions to the procedures may not be field approved. Any deviation(s) from a previously accepted plan including will***

require a formal submission of the procedure for review and acceptance prior to performing any work. A Professional Engineer in the State of New York must sign and seal the plans.

d. Sheeting and Shoring Plans – If excavation within the live load influence zone (a 1.5H to 1V slope line starting at 1.5 feet below top of rail and 12' from the centerline of track) is necessary, the contractor shall submit three (3) sets of detailed drawings and one (1) set of calculations in accordance with CSXT Design & Construction Standard Specifications. Shoring shall be designed to resist a vertical live load surcharge of 1,882 lbs. per square foot, in addition to active earth pressure. The surcharge shall be assumed to act on a continuous strip, 8'-6" wide. Lateral pressures due to surcharge shall be computed using the strip load formula shown in AREMA Manual for Railway Engineering, Chapter 8, Part 20. Allowable stresses in materials shall be in accordance with AREMA Manual for Railway Engineering, Chapter 7, 8, and 15. A Registered Professional Engineer in the State of New York must seal all sheeting and shoring plans.

e. Ballast Protection – A ballast protection system may be required at the sole discretion of CSXT depending on the contractor's proposed methods to perform the work. The system shall use filter fabric and indicate the anchorage system. The ballast protection is to extend a minimum of 25' beyond the proposed limit of work or greater as determined by CSXT and be continuously maintained to prevent all contaminants from entering the ballast section of all tracks for the entire duration of the project.

f. Construction Schedule – Submit a detailed construction schedule for the duration of the project clearly indicating the time periods while working on and around CSXT right-of-way. As the work progresses, this schedule shall be updated and resubmitted as necessary to reflect changes in work sequence, duration and method, etc.

Insurance – Submit all necessary insurance information in accordance with the current CSXT Insurance Requirements listed in "Attachment A" for approval. The complete insurance policies should be submitted by email to **insurancedocuments@csx.com** with a copy sent to the CMR. The body of the email shall include the following information:

CSXT PUBLIC PROJECT: Salina, Onondaga County, New York; Replacement of I-90 over CSXT; MP QM-5.10, DOT# 513 070 H, Albany Division, St. Lawrence Subdivision, NYSTA# D214469, OP# NY0575

The Contractor shall provide their name and contact information in all correspondence.

The insurance policies will be required to be in place and approved prior to any work commencing on or that could potentially impact CSXT right-of-way.

g. Emergency Action Plan – Submit an emergency action plan indicating the location of the site, contact numbers, access to the site, instructions for emergency response and location of nearest hospitals. This plan should cover all items required in the event of an emergency at the site including fire suppression. Coordinate the Emergency Action Plan with the safety related discussion of the Means and Methods submission discussed above. The plan should also include a method to provide this information to each project worker for each day on site.

3. Up to thirty (30) days will be required to review all construction submissions. Up to an additional thirty (30) days will be required to review any subsequent submissions returned not approved.

4. No storm water from the project may discharge onto the CSXT right-of-way at any time during construction.

5. The Contractor must ensure that proper erosion control is implemented on and adjacent to CSXT right-of-way during construction. The Contractor may be required to submit a detailed erosion control plan for review and acceptance by CSXT or the CMR prior to performing any work.

6. The Contractor must not use CSXT right-of-way for storage of materials or equipment during construction. The CSXT right-of-way must remain clear for railroad use at all times. Equipment may not be positioned to block the railroad access road, track area, or any part of the CSXT right-of-way without CSXT approval.

7. The Contractor will be required to abide by the provisions of the NYSTA Construction Agreement. Periodically, throughout the project duration, the Contractor will be required to meet, discuss and, if necessary, take immediate action at the discretion of CSXT personnel and/or the CMR to comply with provisions of that agreement and these specifications.

8. This project will require extensive use of CSXT Flagmen to protect train operations from project activity in the area of the tracks. While CSXT cannot guarantee the availability of flagmen at all requested times, every accommodation will be extended to the Contractor when forces are available. Flagging requests should be made to Michael Cooper, Bergmann Associates 518.862.0325 at least thirty (30) days in advance. Termination or cancellation of a flagman requires ten (10) days notice to avoid incurring costs.

9. All crane and equipment operations that could potentially impact CSXT right-of-way must be coordinated with the CSXT Flagman.

10. For sheeting/shoring within eighteen (18') feet of centerline of track, the live load influence zone, and in slopes, the contractor shall use sheet pile. No sheet pile in slopes or within eighteen (18') feet of centerline of track shall be removed. Sheet piles shall be cutoff three (3') feet below the ground line after backfilling to that point. The remaining three (3') shall be backfilled immediately after cutoff.

11. Contractor access will be limited to the immediate project area only. The CSXT right-of-way may not be used for contractor access to the project site and no temporary at-grade crossings will be allowed.

12. The Contractor or the Agency shall be responsible to have painted on the structure the DOT Number assigned to the grade separation. This number shall be affixed at a location on either side of the CSXT tracks or property and in a manner such that it can be readily discerned and visible from track level. The font size of the DOT numbers and letters should be at least four inches (4 ") tall and shall be black on a light-colored background or white on a dark-colored background of the grade separation component.

13. At project completion, submit a set of “As-Built” plans for the proposed bridge construction and any work performed on the CSXT right-of-way. Please forward the plans to:

Mr. Ed Sparks
Assistant Chief Engineer Structures
CSX Transportation
500 Water Street, J350
Jacksonville, FL 32202

ATTACHMENT "A"
INSURANCE REQUIREMENTS

Evidence required by CSX Transportation, Inc.
You are required to furnish Insurance to protect CSX Transportation, Inc. in connection with activities to be performed on or adjacent to CSX Transportation's Right of Way.

The following summarize CSXT's specifications for proper evidence of insurance:

1. Commercial General Liability coverage at their sole cost and expense with limits of not less than $5,000,000 in combined single limits for bodily injury and/or property damage per occurrence, and such policies shall name CSXT as an additional insured.

2. Statutory Worker's Compensation and Employers Liability Insurance with limits of not less than $1,000,000, which insurance must contain a waiver of subrogation against CSXT and its affiliates [if permitted by state law].

3. Commercial automobile liability insurance with limits of not less than $1,000,000 combined single limit for bodily injury and/or property damage per occurrence, and such policies shall name CSXT as an additional insured.

4. Railroad protective liability insurance with limits of not less than $5,000,000 combined single limit for bodily injury and/or property damage per occurrence and an aggregate annual limit of $10,000,000, which insurance shall satisfy the following additional requirements:

a. The Railroad Protective Liability Insurance Policy must be on the ISO/RIMA Form of Railroad Protective Insurance - Insurance Services Office (ISO) Form CG 00 35.

b. CSX Transportation must be the named insured on the Railroad Protective Liability Insurance Policy. The address should be listed as:

CSX Transportation, Inc.
500 Water Street - C907
Jacksonville, FL 32202

c. Name and Address of Licensee must be shown on the Declarations page.

d. A description of operations and location must appear on the Declarations page and must match the Project description.

e. Authorized endorsements must include the Pollution Exclusion Amendment - CG 28 31, unless using form CG 00 35 version 96 and later.

f. Authorized endorsements may include:

(i) Broad Form Nuclear Exclusion - IL 00 21
(ii) 30-day Advance Notice of Non-renewal or cancellation
(iii) Required State Cancellation Endorsement
(iv) Quick Reference or Index - CL/IL 240

g. Authorized endorsements may not include:

(i) A Pollution Exclusion Endorsement except CG 28 31
(ii) A Punitive or Exemplary Damages Exclusion
(iii) A "Common Policy Conditions" Endorsement
(iv) Any endorsement that is not named in Section 4 (e) or (f) above.
(v) Policies that contain any type of deductible

5. All insurance companies must be A. M. Best rated A- and Class VII or better.

6. Such additional or different insurance as CSXT may require.

II. Additional Terms

1. Licensee must submit the original Railroad Protective Liability policy, Certificates of Insurance and all notices and correspondence regarding the insurance policies to:

   insurancedocuments@csx.com

2. Licensee may not begin work on the Project until it has received CSXT's written approval of the required insurance.

APPENDIX

CSX Transportation

CSXT SPECIAL PROVISIONS

Public Projects Group
Jacksonville, FL
Date Issued: May 9, 2011

CSXT SPECIAL PROVISIONS

AUTHORITY OF CSXT ENGINEER
The CSXT Representative shall have final authority in all matters affecting the safe maintenance of CSXT operations and CSXT property, and his or her approval shall be obtained by the Agency or its Contractor for methods of construction to avoid interference with CSXT operations and CSXT property and all other matters contemplated by the Agreement and these Special Provisions.

II. INTERFERENCE WITH CSXT OPERATIONS

A. Agency or its Contractor shall arrange and conduct its work so that there will be no interference with CSXT operations, including train, signal, telephone and telegraphic services, or damage to CSXT's property, or to poles, wires, and other facilities of tenants on CSXT's Property or right-of-way. Agency or its Contractor shall store materials so as to prevent trespassers from causing damage to trains, or CSXT Property. Whenever Work is likely to affect the operations or safety of trains, the method of doing such Work shall first be submitted to the CSXT Representative for approval, but such approval shall not relieve Agency or its Contractor from liability in connection with such Work.

B. If conditions arising from or in connection with the Project require that immediate and unusual provisions be made to protect train operation or CSXT's property, Agency or its Contractor shall make such provision. If the CSXT Representative determines that such provision is insufficient, CSXT may, at the expense of Agency or its Contractor, require or provide such provision as may be deemed necessary, or cause the Work to cease immediately.

III. NOTICE OF STARTING WORK. Agency or its Contractor shall not commence any work on CSXT Property or rights of-way until it has complied with the following conditions:

A. Notify CSXT in writing of the date that it intends to commence Work on the Project. Such notice must be received by CSXT at least ten business days in advance of the date Agency or its Contractor proposes to begin Work on CSXT property. The notice must refer to this Agreement by date. If flagging service is required, such notice shall be submitted at least thirty (30) business days in advance of the date scheduled to commence the Work.

B. Obtain authorization from the CSXT Representative to begin Work on CSXT property, such authorization to include an outline of specific conditions with which it must comply.

C. Obtain from CSXT the names, addresses and telephone numbers of CSXT's personnel who must receive notice under provisions in the Agreement. Where more than one individual is designated, the area of responsibility of each shall be specified.

IV. WORK FOR THE BENEFIT OF THE CONTRACTOR

A. No temporary or permanent changes to wire lines or other facilities (other than third party fiber optic cable transmission systems) on CSXT property that are considered necessary to the Work are anticipated or shown on the Plans. If any such changes are, or become, necessary in the opinion of CSXT or Agency, such changes will be covered by appropriate revisions to the Plans and by preparation of a force account estimate. Such force account estimate may be initiated by either CSXT or Agency, but must be approved by both CSXT and Agency. Agency or Contractor shall be responsible for arranging for the relocation of the third party fiber optic cable transmission systems, at no cost or expense to CSXT.

B. Should Agency or Contractor desire any changes in addition to the above, then it shall make separate arrangements with CSXT for such changes to be accomplished at the Agency or Contractor's expense.

V. HAUL ACROSS RAILROAD

A. If Agency or Contractor desires access across CSXT property or tracks at other than an existing and open public road crossing in or incident to construction of the Project, the Agency or Contractor must first obtain the permission of CSXT and shall execute a license agreement or right of entry satisfactory to CSXT, wherein Agency or Contractor agrees to bear all costs and liabilities related to such access.

B. Agency and Contractor shall not cross CSXT's property and tracks with vehicles or equipment of any kind or character, except at such crossing or crossings as may be permitted pursuant to this section.

VI. COOPERATION AND DELAYS

A. Agency or Contractor shall arrange a schedule with CSXT for accomplishing stage construction involving work by CSXT. In arranging its schedule, Agency or Contractor shall ascertain, from CSXT, the lead time required for assembling crews and materials and shall make due allowance therefor

B. Agency or Contractor may not charge any costs or submit any claims against CSXT for hindrance or delay caused by railroad traffic; work done by CSXT or other delay incident to or necessary for safe maintenance of railroad traffic; or for any delays due to compliance with these Special Provisions.

C. Agency and Contractor shall cooperate with others participating in the construction of the Project to the end that all work may be carried on to the best advantage.

D. Agency and Contractor understand and agree that CSXT does not assume any responsibility for work performed by others in connection the Project. Agency and Contractor further understand and agree that they shall have no claim whatsoever against CSXT for any inconvenience, delay or additional cost incurred by Agency or Contractor on account of operations by others.

VII. STORAGE OF MATERIALS AND EQUIPMENT

Agency and Contractor shall not store their materials or equipment on CSXT's property or where they may potentially interfere with CSXT's operations, unless Agency or Contractor has received CSXT Representative's prior written permission. Agency and Contractor understand and agree that CSXT will not be liable for any damage to such materials and equipment from any cause and that CSXT may move, or require Agency or Contractor to move, such material and equipment at Agency's or Contractor's sole expense. To minimize the possibility of damage to the railroad tracks resulting from the unauthorized use of equipment, all grading or other construction equipment that is left parked near the tracks unattended by watchmen shall be immobilized to the extent feasible so that it cannot be moved by unauthorized persons.

VIII. CONSTRUCTION PROCEDURES

A. General

1. Construction work on CSXT property shall be subject to CSXT's inspection and approval.

2. Construction work on CSXT property shall be in accord with CSXT's written outline of specific conditions and with these Special Provisions.

3. Contractor shall observe the terms and rules of the CSXT Safe Way manual, which Agency and Contractor shall be required to obtain from CSXT, and in accord with any other instructions furnished by CSXT or CSXT's Representative.

B. Blasting

1. Agency or Contractor shall obtain CSXT Representative's and Agency Representative's prior written approval for use of explosives on or adjacent to CSXT property. If permission for use of explosives is granted,Agency or Contractor must comply with the following:

a. Blasting shall be done with light charges under the direct supervision of a responsible officer or employee of Agency or Contractor.

b. Electric detonating fuses shall not be used because of the possibility of premature explosions resulting from operation of two-way train radios.

c. No blasting shall be done without the presence of an authorized representative of CSXT. At least 30 days' advance notice to CSXT Representative is required to arrange for the presence of an authorized CSXT representative and any flagging that CSXT may require.

d. Agency or Contractor must have at the Project site adequate equipment, labor and materials, and allow sufficient time, to (i) clean up (at Agency's expense) debris resulting from the blasting without any delay to trains; and (ii) correct (at Agency's expense) any track misalignment or other damage to CSXT's property resulting from the blasting, as directed by CSXT Representative, without delay to trains. If Agency's or Contractor's actions result in delay of any trains, including Amtrak passenger trains, Agency shall bear the entire cost thereof.

e. Agency and Contractor shall not store explosives on CSXT property.

2. CSXT Representative will:

a. Determine the approximate location of trains and advise Agency or Contractor of the approximate amount of time available for the blasting operation and clean-up.

b. Have the authority to order discontinuance of blasting if, in his or her opinion, blasting is too hazardous or is not in accord with these Special Provisions.

IX. MAINTENANCE OF DITCHES ADJACENT TO CSXT TRACKS

Agency or Contractor shall maintain all ditches and drainage structures free of silt or other obstructions that may result from their operations. Agency or Contractor shall provide erosion control measures during construction and use methods that accord with applicable state standard specifications for road and bridge construction, including either (1) silt fence; (2) hay or straw barrier; (3) berm or temporary ditches; (4) sediment basin; (5) aggregate checks; and (6) channel lining. All such maintenance and repair of damages due to Agency's or Contractor's operations shall be performed at Agency's expense.

X. FLAGGING / INSPECTION SERVICE

A. CSXT has sole authority to determine the need for flagging required to protect its operations and property. In general, flagging protection will be required whenever Agency or Contractor or their equipment are, or are likely to be, working within fifty (50) feet of live track or other track clearances specified by CSXT, or over tracks.

B. Agency shall reimburse CSXT directly for all costs of flagging that is required on account of construction within CSXT property shown in the Plans, or that is covered by an approved plan revision, supplemental agreement or change order.

C. Agency or Contractor shall give a minimum of 30 days' advance notice to CSXT Representative for anticipated need for flagging service. No work shall be undertaken until the flag person(s) is/are at the job site. If it is necessary for CSXT to advertise a flagging job for bid, it may take up to 90-days to obtain this service, and CSXT shall not be liable for the cost of delays attributable to obtaining such service.

D. CSXT shall have the right to assign an individual to the site of the Project to perform inspection service whenever, in the opinion of CSXT Representative, such inspection may be necessary. Agency shall reimburse CSXT for the costs incurred by CSXT for such inspection service. Inspection service shall not relieve Agency or Contractor from liability for its Work.

E. CSXT shall render invoices for, and Agency shall pay for, the actual pay rate of the flagpersons and inspectors used, plus standard additives, whether that amount is above or below the rate provided in the Estimate. If the rate of pay that is to be used for inspector or flagging service is changed before the work is started or during the progress of the work, whether by law or agreement between CSXT and its employees, or if the tax rates on labor are changed, bills will be rendered by CSXT and paid by Agency using the new rates. Agency and Contractor shall perform their operations that require flagging protection or inspection service in such a manner and sequence that the cost of such will be as economical as possible.

XI. UTILITY FACILITIES ON CSXT PROPERTY

Agency shall arrange, upon approval from CSXT, to have any utility facilities on or over CSXT Property changed as may be necessary to provide clearances for the proposed trackage.

XII. CLEAN-UP

Agency or Contractor, upon completion of the Project, shall remove from CSXT's Property any temporary grade crossings, any temporary erosion control measures used to control drainage, all machinery, equipment, surplus materials, falsework, rubbish, or temporary buildings belonging to Agency or Contractor. Agency or Contractor, upon completion of the Project, shall leave CSXT Property in neat condition, satisfactory to CSXT Representative.

XIII. FAILURE TO COMPLY

If Agency or Contractor violate or fail to comply with any of the requirements of these Special Provisions, (a) CSXT may require Agency and/or Contractor to vacate CSXT Property; and (b) CSXT may withhold monies due Agency and/or Contractor; (c) CSXT may require Agency to withhold monies due Contractor; and (d) CSXT may cure such failure and the Agency shall reimburse CSXT for the cost of curing such failure.

APPENDIX

CSX Transportation

CONSTRUCTION SUBMISSION CRITERIA

Public Projects Group
Jacksonville, FL
Date Issued: February 23, 2015

TABLE OF CONTENTS

INTRODUCTION
SECTION I: Definitions
SECTION II: Construction Submissions
SECTION III: Hoisting Operations
SECTION IV: Demolition Procedure
SECTION V: Erection Procedure
SECTION VI: Temporary Excavation and Shoring
SECTION VII: Track Monitoring

INTRODUCTION

The intent of this document is to guide outside agencies and their Contractors when performing work on, over, or with potential to impact CSXT property (ROW). Work plans shall be submitted for review to the designated CSXT Engineering Representative for all work which presents the potential to affect CSXT property or operations; this document shall serve as a guide in preparing these work plans. All work shall be performed in a manner that does not adversely impact CSXT operations or safety; as such, the requirements of this document shall be strictly adhered to, in addition to all other applicable standards associated with the construction. Applicable standards include, but are not limited to, CSXT Standards and Special Provisions, CSXT Insurance Requirements, CSXT Pipeline Occupancy Criteria, as well as the governing local, county, state and federal requirements. It shall be noted that this document and all other CSXT standards are subject to change without notice, and future revisions will be made available at the CSXT website: www.csx.com.

I. DEFINITIONS

1. *Agency* – The project sponsor (i.e., State DOT, Local Agencies, Private Developer, etc.)

2. *AREMA* – American Railway Engineering and Maintenance-of-Way Association – the North American railroad industry standards group. The use of this term shall be in specific reference to the AREMA Manual for Railway Engineering.

3. *Construction Submission* – The Agency or its representative shall submit six (6) sets of plans, supporting calculations, and detailed means and methods procedures for the specific proposed activity. All plans, specifications, and supporting calculations shall be signed/sealed by a Professional Engineer as defined below.

4. *Controlled Demolition* – Removal of an existing structure or subcomponents in a manner that positively prevents any debris or material from falling, impacting, or otherwise affecting CSXT employees, equipment or property. Provisions shall be made to ensure that there is no impairment of railroad operations or CSXT's ability to access its property at all times.

5. *Contractor* – The Agency's representative retained to perform the project work.

6. *Engineer* – CSXT Engineering Representative or a GEC authorized to act on the behalf of CSXT.

7. *Flagman* – A qualified CSXT employee with the sole responsibility to direct or restrict movement of trains, at or through a specific location, to provide protection for workers.

8. *GEC* – General Engineering Consultant who has been authorized to act on the behalf of CSXT.

9. *Horizontal Clearance* – Distance measured perpendicularly from centerline of any track to the nearest obstruction at any elevation between TOR and the maximum vertical clearance of the track.

10. *Professional Engineer* – An engineer who is licensed in State or Commonwealth in which the project is to occur. All plans, specifications, and supporting calculations shall be prepared by the Licensed Professional Engineer and shall bear his/her seal and signature.

11. *Potential to Foul* – Work having the possibility of impacting CSXT property or operations; defined as one or more of the following:
    a. Any activity where access onto CSXT property is required.
    b. Any activity where work is being performed on CSXT ROW.
    c. Any excavation work adjacent to CSXT tracks or facilities, within the Theoretical Railroad Live Load Influence Zone, or where the active earth pressure zone extends within the CSXT property limits.
    d. The use of any equipment where, if tipped and laid flat in any direction (360 degrees) about its center pin, can encroach within twenty five feet (25'-0") of the nearest track centerline. This is based upon the proposed location of

the equipment during use, and may be a function of the equipment boom length. Note that hoisting equipment with the potential to foul must satisfy the 150% factor of safety requirement for lifting capacities.

e. Any work where the scatter of debris, or other materials has the potential to encroach within twenty five feet (25'-0") of the nearest track centerline.
f. Any work where significant vibration forces may be induced upon the track structure or existing structures located under, over, or adjacent to the track structure.
g. Any other work which poses the potential to disrupt rail operations, threaten the safety of railroad employees, or otherwise negatively impact railroad property, as determined by CSXT.

12. *ROW* – Right of Way; Refers to CSXT Right-of-Way as well as all CSXT property and facilities. This includes all aerial space within the property limits, and any underground facilities.

13. *Submission Review Period* - a minimum of thirty (30) days in advance of start of work. Up to thirty (30) days will be required for the initial review response. Up to an additional thirty (30) days may be required to review any/all subsequent submissions or resubmission.

14. *Theoretical Railroad Live Load Influence Zone* – A 1½ horizontal to 1 vertical theoretical slope line starting 18 inches (1'-6") below top of tie elevation and twelve feet (12'-0") from the centerline of the nearest track.

15. *TOR* – Top of Rail. This is the base point for clearance measurements. It refers to the crown (top) of the steel rail; the point where train wheels bear on the steel rails.

16. *Track Structure* – All load bearing elements which support the train. This includes, but is not limited to, the rail, ties, appurtenances, ballast, sub-ballast, embankment, retaining walls, and bridge structures.

17. *Vertical Clearance* – Distance measured from TOR to the lowest obstruction within six feet (6'-0") of the track centerline, in either direction.

II. GENERAL SUBMISSION REQUIREMENTS

A. A construction work plan is required to be submitted by the Agency or its Contractor, for review and acceptance, prior to accessing or performing any work with Potential to Foul.

B. The Agency or its representative shall submit six (6) sets of plans, specifications, supporting calculations, and detailed means and methods procedures for the specific proposed work activity.

C. Construction submissions shall include all information relevant to the work activity, and shall clearly and concisely explain the nature of the work, how it is being performed, and what measures are being taken to ensure that railroad property and operations are continuously maintained.

D. All construction plans shall include a map of the work site, depicting the CSXT tracks, the CSXT right of way, proposed means of access, proposed locations for equipment and material staging (dimensioned from nearest track centerline), as well as all other relevant project information. An elevation drawing may also be necessary in order to depict clearances or other components of the work.

E. Please note that CSXT will not provide pricing to individual contractors involved in bidding projects. Bidding contractors shall request information from the agency and not CSXT.

F. The Contractor shall install a geotextile fabric ballast protection system to prevent construction or demolition debris and fines from fouling ballast. The geotextile ballast protection system shall be installed and maintained by the Contractor to the satisfaction of the Engineer.

G. The Engineer shall be kept aware of the construction schedule. The Contractor shall provide timely communication to the Engineer when scheduling the work such that the Engineer may be present during the work. The Contractor's schedule shall not dictate the work plan review schedule, and flagging shall not be scheduled prior to receipt of an accepted work plan.

H. At any time during construction activities, the Engineer may require revisions to the previously approved procedures to address weather, site conditions or other circumstances that may create a potential hazard to rail operations or CSXT facilities. Such revisions may require immediate interruption or termination of ongoing activities until such time the issue is resolved to the Engineer's satisfaction. CSXT and its GEC shall not be responsible for any additional costs or time claims associated with such revisions.

I. Blasting will not be permitted to demolish a structure over or within CSXT's right-of-way. When blasting off of CSXT property but with Potential to Foul, vibration monitoring, track settlement surveying, and/or other protective measures may be required as determined by the Engineer.

J. Blasting is not permitted adjacent to CSXT right-of-way without written approval from the Chief Engineer, CSXT.

K. Mechanical and chemical means of rock removal must be explored before blasting is considered. If written permission for the use of explosives is granted, the Agency or Contractor must submit a work plan satisfying the following requirements:

1. Blasting shall be done with light charges under the direct supervision of a responsible officer or employee of the Agency or Contractor.

2. Electronic detonating fuses shall not be used because of the possibility of premature explosions resulting from operation of two-way train radios.

3. No blasting shall be done without the presence of an authorized representative of CSXT. Advance notice to the Engineer is required to arrange for the presence of an authorized CSXT representative and any flagging that CSXT may require.

4. Agency or Contractor must have at the project site adequate equipment, labor and materials, and allow sufficient time, to clean up debris resulting from the blasting and correct any misalignment of tracks or other damage to CSXT property resulting from the blasting. Any corrective measures required must be performed as directed by the Engineer at the Agency's or Contractor's expense without any delay to trains. If Agency's or Contractor's actions result in the delay of any trains including passenger trains, the Agency or Contractor shall bear the entire cost thereof.

5. The Agency or Contractor may not store explosives on CSXT property.

6. At any time during blasting activities, the Engineer may require revisions to the previously approved procedures to address weather, site conditions or other circumstances that may create a potential hazard to rail operations or CSXT facilities. Such revisions may require immediate interruption or termination of ongoing activities until such time the issue is resolved to the Engineer's satisfaction. CSXT and its GEC shall not be responsible for any additional costs or time claims associated with such revisions.

III. HOISTING OPERATIONS

A. All proposed hoisting operations with Potential to Foul shall be submitted in accordance with the following:

1. A plan view drawing shall depict the work site, the CSXT track(s), the proposed location(s) of the lifting equipment, as well as the proposed locations for picking, any intermediate staging, and setting the load(s). All locations shall be dimensioned from centerline of the nearest track. Crane locations shall also be dimensioned from a stationary point at the work site for field confirmation.

2. Computations showing the anticipated weight of all picks. Computations shall be made based upon the field-verified plans of the existing structure. Pick weights shall account for the weight of concrete rubble or other materials attached to the component being removed; this includes the weight of subsequent rigging devices/components. Rigging components shall be sized for the subsequent pick weight.

3. All lifting equipment, rigging devices, and other load bearing elements shall have a rated (safe lifting) capacity that is greater than or equal to 150% of the load it is carrying, as a factor of safety. Supporting calculations shall be furnished to verify the minimum capacity requirement is maintained for the duration of the hoisting operation.

4. Dynamic hoisting operations are prohibited when carrying a load with the Potential to Foul. Cranes or other lifting equipment shall remain stationary during lifting. (i.e., no moving picks).

5. For lifting equipment, the manufacturer's capacity charts, including crane, counterweight, maximum boom angle, and boom nomenclature is to be submitted.

6. A schematic rigging diagram must be provided to clearly call out each rigging component from crane hook to the material being hoisted. Copies of catalog or information sheets shall be provided to verify rigging weights and capacities.

7. For built-up rigging devices, the contractor shall submit the following:

   i. Details of the device, calling out material types, sizes, connections and other properties.
   ii. Load test certification documents and/or design computations bearing the seal and signature of a Professional Engineer. Load test shall be performed in the configuration of its intended use as part of the subject demolition procedure.
   iii. Copies of the latest inspection reports of the rigging device. The device shall be inspected within one (1) calendar year of the proposed date for use.

8. A detail shall be provided showing the crane outrigger setup, including dimensions from adjacent slopes or facilities. The detail shall indicate requirements for bearing surface preparation, including material requirements and compaction efforts. As a minimum, outriggers and/or tracks shall bear on mats, positioned on level material with adequate bearing capacity.

9. A complete written narrative that describes the sequence of events, indicating the order of lifts and any repositioning or re-hitching of the crane(s).

IV. DEMOLITION PROCEDURE

A. The Agency or its Contractor shall submit a detailed procedure for a controlled demolition of any structure on, over, or adjacent to the ROW. The controlled demolition procedure must be approved by the Engineer prior to beginning work on the project.

B. Existing Condition of structure being demolished:

   1. The Contractor shall submit as-built plans for the structure(s) being demolished.
   2. If as-built plans are unavailable, the Contractor shall perform an investigation of the structure, including any foundations, substructures, etc. The field measurements are to be made under the supervision of the Professional Engineer submitting the demolition procedure. Findings shall be submitted as part of the demolition means and methods submittal for review by the Engineer.
   3. Any proposed method for temporary stabilization of the structure during the demolition shall be based on the existing plans or investigative findings, and submitted as part of the demolition means and methods for review by the Engineer.

C. Demolition work plans shall include a schematic plan depicting the proposed locations of the following, at various stages of the demolition:

   1. All cranes and equipment, calling out the operating radii.
   2. All proposed access and staging locations with all dimensions referenced from the center line of the nearest track.
   3. Proposed locations for stockpiling material or locations for truck loading.
   4. The location, with relevant dimensions, of all tracks, other railroad facilities; wires, poles, adjacent structures, or buried utilities that could be affected, showing that the proposed lifts are clear of these obstructions.
   5. Note that no crane or equipment may be set on the CSXT rails or track structure and no material may be dropped on CSXT property.

D. Demolition submittal shall also include the following information:

   1. All hoisting details, as dictated by Section III of this document.
   2. A time schedule for each of the various stages must be shown as well as a schedule for the entire lifting procedure. The proposed time frames for all critical subtasks (i.e., torch/saw cutting various portions of the superstructure or

substructure, dismantling splices, installing temporary bracing, etc.) shall be furnished so that the potential impact(s) to CSXT operations may be assessed and eliminated or minimized.

3. The names and experience of the key Contractor personnel involved in the operation shall be included in the Contractor's means and methods submission.
4. Design and supporting calculations shall be prepared, signed, and sealed by the Professional Engineer for items including the temporary support of components or intermediate stages shall be submitted for review. A guardrail will be required to be installed in a track in the proximity of temporary bents or shoring towers, when located within twelve feet (12'-0") from the centerline of the track. The guardrail will be installed by CSXT forces, at the expense of the Agency or its contractor.

E. Girders or girder systems shall be stable at all times during demolition. Temporary bracing shall be provided at the piers, abutments, or other locations to resist overturning and/or buckling of the member(s). The agency shall submit a design and details of the proposed temporary bracing system, for review by the Engineer. Lateral wind forces for the temporary conditions shall be considered in accordance with AREMA, Chapter 8, Section 28.6.2. The minimum lateral wind pressure shall be fifteen pounds per square foot (15 psf).

F. Existing, obsolete, bridge piers shall be removed to a minimum of three feet (3'-0") below the finished grade, final ditch line invert, or as directed by the Engineer.

G. A minimum quantity of twenty five (25) tons of CSXT approved granite track ballast may be required to be furnished and stockpiled on site by the Contractor, or as directed by the Engineer.

H. The use of acetylene gas is prohibited for use on or over CSXT property. Torch cutting shall be performed utilizing other materials such as propane.

I. CSXT's tracks, signals, structures, and other facilities shall be protected from damage during demolition of existing structure or replacement of deck slab.

J. Demolition Debris Shield

1. On-track or ground-level debris shields (such as crane mats) are prohibited for use by CSXT.

2. Demolition Debris Shield shall be installed prior to the demolition of the bridge deck or other relevant portions of the structure. The demolition debris shield shall be erected from the underside of the bridge over the track area to catch all falling debris. The debris shield shall not be the primary means of debris containment.

   i. The demolition debris shield design and supporting calculations, all signed/sealed by a Professional Engineer, shall be submitted for review and acceptance.
   ii. The demolition debris shield shall have a minimum design load of 50 pounds per square foot (50 psf) plus the weight of the equipment, debris, personnel, and all other loads.
   iii. The Contractor shall verify the maximum particle size and quantity of the demolition debris generated during the procedure does not exceed the shield design loads. Shield design shall account for loads induced by particle impact; however the demolition procedure shall be such that impact forces are minimized. The debris shield shall not be the primary means of debris containment.
   iv. The Contractor shall include installation/removal means and methods for the demolition debris shield as part of the proposed Controlled Demolition procedure submission.
   v. The demolition debris shield shall provide twenty three feet (23'-0") minimum vertical clearance, or maintain the existing vertical clearance if the existing clearance is less than twenty three feet (23'-0").
   vi. Horizontal clearance to the centerline of the track should not be reduced unless approved by the Engineer.
   vii. The Contractor shall clean the demolition debris shield daily or more frequently as dictated either by the approved design parameters or as directed by the Engineer.

K. Vertical Demolition Debris Shield

1. This type of shield may be required for substructure removals in close proximity to CSXT track and other facilities, as determined by the Engineer.
2. The Agency or its Contractor shall submit detailed plans with detailed calculations, prepared, signed, and sealed by a Professional Engineer, of the protection shield.

V. ERECTION PROCEDURE

A. The Agency or its Contractor shall submit a detailed procedure for erection of a structure with Potential to Foul. The erection procedure must be approved by the Engineer prior to beginning work on the project.

B. Erection work plans shall include a schematic plan depicting the following, at all stages of the construction:
   1. All proposed locations of all cranes and equipment, calling out the operating radii.
   2. All proposed access and staging locations with all dimensions referenced from the center line of the nearest track.
   3. All proposed locations for stockpiling material or locations for truck loading.
   4. The location, with relevant dimensions, of all tracks, other railroad facilities; wires, poles, adjacent structures, or buried utilities that could be affected, showing that the proposed lifts are clear of these obstructions.

C. No crane or equipment may be set on the CSXT rails or track structure and no material may be dropped on CSXT property.

D. For erection of a structure over the tracks, the following information shall be submitted for review and acceptance by the Engineer, at least thirty (30) days prior to erection:
   1. As-built beam seat elevations – field surveyed upon completion of pier/abutment construction.
   2. Current Top of Rail (TOR) elevations – field measured at the time of as-built elevation collection.
   3. Computations verifying the anticipated minimum vertical clearance in the final condition which accounts for all deflection and camber, based upon the current TOR and as-built beam seat elevations. The anticipated minimum vertical clearance shall be greater than or equal to that which is indicated by the approved plans. Vertical clearance (see definitions) is measured from TOR to the lowest point on the overhead structure at any point within six feet (6'-0") from centerline of the track. Calculations shall be signed and sealed by a Professional Engineer.

E. Girders or girder systems shall be stable at all times during erection. No crane may unhook prior to stabilizing the beam or girder.
   1. Lateral wind forces for the temporary conditions shall be considered in accordance with AREMA, Chapter 8, Section 28.6.2. The minimum lateral wind pressure shall be fifteen pounds per square foot (15 psf).
   2. Temporary bracing shall be provided at the piers, abutments, or other locations to resist overturning and/or buckling of the member(s). The agency shall submit a design and details of the proposed temporary bracing system, for review by the Engineer.
   3. Temporary bracing shall not be removed until sufficient lateral bracing or diaphragm members have been installed to establish a stable condition. Supporting calculations, furnished by the Professional Engineer, shall confirm the stable condition.

F. Erection procedure submissions shall also include the following information:
   1. All hoisting details, as dictated by Section III of this document.
   2. A time schedule for each of the various stages must be shown as well as a schedule for the entire lifting procedure. The proposed time frames for all critical subtasks (i.e., performing aerial splices, installing temporary bracing, installation of diaphragm members, etc.) shall be furnished so that the potential impact(s) to CSXT operations may be assessed and eliminated or minimized.
   3. The names and experience of the key Contractor personnel involved in the operation shall be included in the Contractor's means and methods submission.
   4. A guardrail will be required to be installed in a track in the proximity of temporary bents or shoring towers, when located within twelve feet (12'-0") from the centerline of the track. The guardrail will be installed by CSXT forces, at the expense of the Agency or its Contractor.
   5. Design and supporting calculations prepared by the Professional Engineer for items including the temporary support of components or intermediate stages shall be submitted for review.

VI. TEMPORARY EXCAVATION AND SHORING

A. The Agency or its Contractor shall submit a detailed design and procedure for the installation of a sheeting/shoring system adjacent to the tracks. Shoring protection shall be provided when excavating with Potential to Foul, or as otherwise determined by CSXT. Shoring shall be provided in accordance with the AREMA, except as noted below.

B. Shoring may not be required if all of the following conditions are satisfied:
   1. The excavation does not encroach within the Theoretical Live Load Influence Zone. Please refer to Figure 1.
   2. The track structure is situated on level ground, or in a cut section, and on stable soil.
   3. The excavation does not adversely impact the stability of a CSXT facility (i.e. signal bungalow, drainage facility,

undergrade bridge, building, etc), or the stability of any structure on, over, or adjacent to CSXT property with potential to foul.

4. Shoring is not required by any governing federal, state, local or other construction code.

C. Shoring is required when excavating the toe of an embankment. Excavation of any embankment which supports an active CSXT track structure without shoring will not be permitted.

D. Trench boxes are not an acceptable means of shoring. Trench boxes are prohibited for use on CSXT property or within the Theoretical Railroad Live Load Influence Zone.

E. Shoring shall be a cofferdam-type, which completely encloses the excavation. However, where justified by site or work conditions, partial cofferdams with open sides away from the track may be permissible, as determined by the Engineer.

F. Cofferdams shall be constructed using interlocking steel sheet piles, or when approved by the Engineer, steel soldier piles with timber lagging. Wales and struts shall be included when dictated by the design.

G. The use of tiebacks can be permissible for temporary shoring systems, when conditions warrant. Tiebacks shall have a minimum clear cover of 6'-0", measured from the bottom of the rail. Upon completion of the work, tiebacks shall be grouted, cut off, and remain in place.

H. All shoring systems on, or adjacent to CSXT right-of-way, shall be equipped with railings or other fall protection, compliant with the governing federal, state or local requirements. Area around pits shall be graded to eliminate all potential tripping hazards.

I. Interlocking steel sheet piles shall be used for shoring systems qualifying one or more of the following conditions:
   1. Within 18'-0" of the nearest track centerline
   2. Within the live load influence zone
   3. Within slopes supporting the track structure
   4. As otherwise deemed necessary by the Engineer.

J. Sheet piles qualifying for one or more of the requirements listed in Section VI.I (above) of this document shall not be removed. Sheet piles shall be left in place and cut off a minimum of 3'-0" below the finished grade, the ditch line invert, or as otherwise directed by the Engineer. The ground shall be backfilled and compacted immediately after sheet pile is cut off.

K. The following design considerations shall be considered when preparing the shoring design package:
   1. Shoring shall be designed to resist a vertical live load surcharge of 1,880 lbs. per square foot, in addition to active earth pressure. The surcharge shall be assumed to act on a continuous strip, eight feet six inches (8'-6") wide. Lateral pressures due to surcharge shall be computed using the strip load formula shown in *AREMA Manual for Railway Engineering*, Chapter 8, Part 20.
   2. Allowable stresses in materials shall be in accordance with AREMA Chapter 7, 8, and 15.3.
   3. A minimum horizontal clearance of ten feet (10'-0") from centerline of the track to face of nearest point of shoring shall be maintained, provided a twelve feet (12'-0") roadbed is maintained with a temporary walkway and handrail system.
   4. For temporary shoring systems with Potential to Foul, piles shall be plumb under full dead load. Maximum deflection at the top of wall, under full live load, shall be as follows:
      i. One-half (1/2) inch for walls within twelve feet (12'-0") of track centerline (Measured from centerline of the nearest track to the nearest point of the supporting structure).
      ii. One (1) inch for walls located greater than twelve feet (12'-0") from track centerline

L. Shoring work plans shall be submitted in accordance with Section II of this document, as well as the following additional requirements:
   1. The work plan shall include detailed drawings of the shoring systems calling out the sizes of all structural members, details of all connections. Both plan and elevation drawings shall be provided, calling out dimensions from the face of shoring relative to the nearest track centerline. The elevation drawing shall also show the height of shoring, and track elevation in relation to bottom of excavation.
   2. Full design calculations for the shoring system shall be furnished.
   3. A procedure for cutting off the sheet pile, backfilling and restoring the embankment.

VII. TRACK MONITORING

A. When work being performed has the potential to disrupt the track structure, a work plan must be submitted detailing a track monitoring program which will serve to monitor and detect both horizontal and vertical movement of the CSXT track and roadbed.

B. The program shall specify the survey locations, the distance between the location points, and frequency of monitoring before, during, and after construction. CSXT reserves to the right to modify the survey locations and monitoring frequency as necessary during the project.

C. The survey data shall be collected in accordance with the approved frequency and immediately furnished to the Engineer for analysis.

D. If any movement has occurred as determined by the Engineer, CSXT will be immediately notified. CSXT, at its sole discretion, shall have the right to immediately require all contractor operations to be ceased, have the excavated area immediately backfilled and/or determine what corrective action is required. Any corrective action required by CSXT or performed by CSXT including the monitoring of corrective action of the contractor will be at project expense.

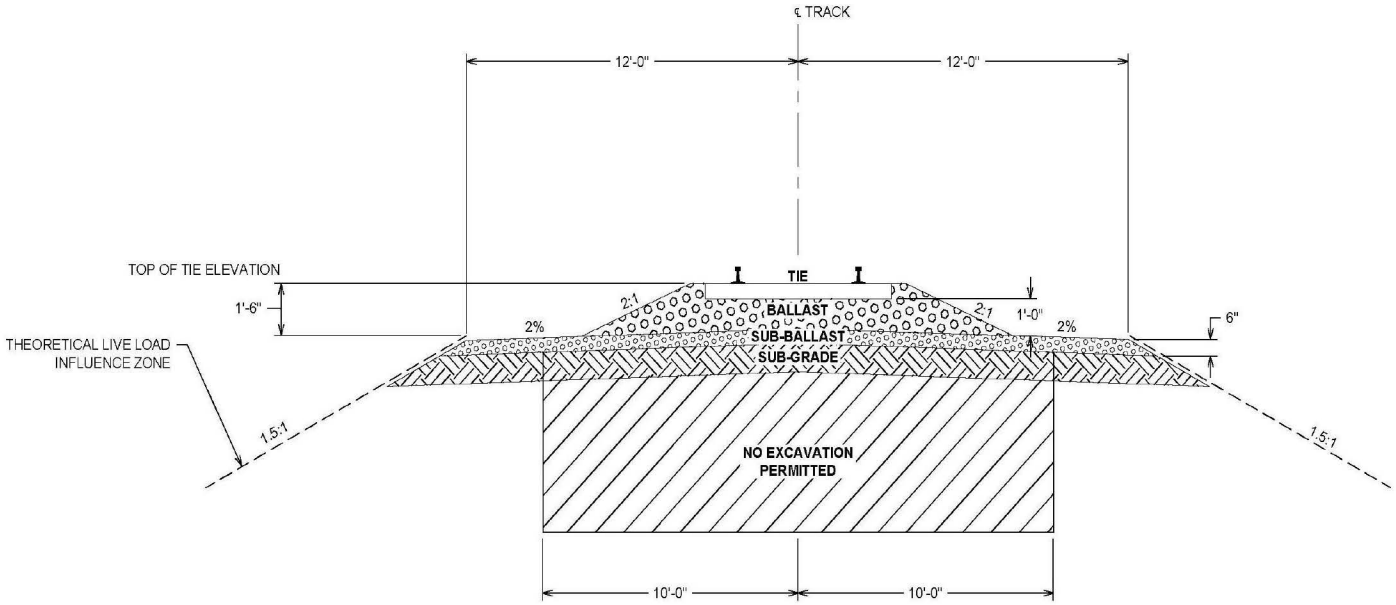

THEORETICAL LIVE LOAD INFLUENCE ZONE

NTS

SHORING IS REQUIRED FOR EXCAVATION WITHIN THE THEORETICAL LIVE LOAD INFLUENCE ZONE.

NOTES:

1. THEORETICAL LIVE LOAD INFLUENCE ZONE IS A 1 $\frac{1}{2}$ HORIZONTAL TO 1 VERTICAL THEORETICAL SLOPE LINE STARTING 1'-6" BELOW TOP OF TIE ELEVATION AND 12'-0" FROM THE CENTERLINE OF THE NEAREST TRACK.

2. REFER TO CONSTRUCTION SUBMISSION CRITERIA FOR ADDITIONAL REQUIREMENTS.

3. SHORING SHALL BE DESIGNED TO RESIST A VERTICAL LIVE LOAD SURCHARGE OF 1,880 LBS. PER SQUARE FOOT, IN ADDITION TO ACTIVE EARTH PRESSURE. THE SURCHARGE SHALL BE ASSUMED TO ACT ON A CONTINUOUS STRIP, 8'-6" WIDE. LATERAL PRESSURES DUE TO SURCHARGE SHALL BE COMPUTED USING THE STRIP LOAD FORMULA SHOWN IN AREMA MANUAL FOR RAILWAY ENGINEERING, CHAPTER 8, PART 20.

FIGURE 1: Theoretical Live Load Influence Zone

SPECIALTY ITEMS

The following is a list of items that are considered "Specialty Items" according to Section 108-05:

ITEM	DESCRIPTION
620.12--25	Stamped Concrete Slope Protection
685.17XX--25	(White or Yellow) Highly Reflectorized Triple Drop Pavement Markings, Stripes

SUPPLEMENTAL INFORMATION FOR BIDDERS

Supplemental information is available to bidders. As indicated below, information is either available on the Thruway Authority's website with the contract plans and proposal or available in electronic format from the Thruway Authority upon request prior to or after the letting date.

The bidder's signature on this proposal certifies that they have made themselves aware of the availability of the information indicated below prior to the letting date.

INFORMATION	NOT AVAILABLE	AVAILABLE ON THRUWAY AUTHORITY WEBSITE	AVAILABLE UPON REQUEST ON CD
Engineer Estimate Quantity Workups	X		
Utility Estimate Sheets with Names of Utility Officials	X		
Earthwork Cross Section Sheets		X	
Earthwork Sheets	X		
Drainage Estimate Sheets	X		
Sign Face Layouts	X		
Logs of Subsurface Exploration		X	
Tabulated Results of Probings	X		
Tabulated Depth of Bed Rock	X		
Logs Showing Laboratory Description of Soil Samples	X		
Laboratory Test Data from Soil Samples	X		
Rock Outcrop Maps	X		
Granular Materials Resources Survey Reports	X		
Terrain Reconnaissance Reports	X		
Subsurface Data	X		
Granular Material Sources Report	X		
Pavement/Rock Cores (available for inspection only)	X		
Record Plans		X	
Applicable Asbestos Blanket Variances	X		
Storm Water Pollution Prevention Plan		X	
Shop Drawings	X		
Water Level Records (Canal Projects)	X		
Residency Sheets (Canal Projects)	X		
Foundation Reports		X	
CADD Files of Contract Plans (Unofficial - Not signed or stamped)		X	
Estimate Calculations		X	

Hard copies of the supplemental information indicated above are not available. Contractors shall be responsible for their own hard copies of this information at no additional cost to the Authority.

REVISIONS TO NYSDOT STANDARD SPECIFICATIONS

NEW YORK STATE THRUWAY AUTHORITY ADDENDUM TO THE STANDARD SPECIFICATIONS

The Standard Specifications published by the New York State Department of Transportation shall form a part of the agreement. The dated edition that applies to this contract is provided on the front cover of the Proposal. All work contemplated under this contract is to be covered by, and be in conformance with, the Standard Specifications as modified by The New York State Thruway Authority Addendum (TA) to the Standard Specification Books.

The officially adopted Thruway Authority Addendum (TA) to the NYSDOT Standard Specification Books is available on the Thruway Authority website at:
http://www.thruway.ny.gov/business/addendum/index.html
The most recent version of the TA, prior to the project Letting Date, shall apply to this agreement.

All special notes bound in this proposal shall be incorporated. If a conflict exists between the special specifications and/or provisions set forth in this proposal and the specifications and/or provisions set forth in the New York State Department of Transportation's Standard Specifications, those in the Proposal shall govern.

SPECIAL SPECIFICATIONS

SPECIAL NOTE
SPECIAL SPECIFICATION PAY ITEM NUMBERS

The Contractor's attention is directed to the special specification pay item formats used in this contract. Special specification pay items may be presented in two (2) different formats:

Format 1: Pay items for a special specification will have three (3) digits to the left of the decimal point and up to eight (8) digits to the right of the decimal. Spaces may appear in the third to sixth places after the decimal. The 7th and 8th digits to the right of the decimal will represent the origin of the specification.

Format 2: Pay items for a special specification will have three (3) digits to the left of the decimal point and up to eight (8) digits to the right of the decimal. Dashes may appear in the third to sixth places after the decimal. The 7th and 8th digits to the right of the decimal will represent the origin of the specification.

Where items in this contract appear in multiple formats, the formats shall be equated to each other as illustrated below:

FORMAT 1	**FORMAT 2**
XXX.XX XX	XXX.XX--------XX
XXX.XXXX XX	XXX.XXXX----XX
XXX.XXXXXXX	XXX.XXXXXXXX

ITEM 503.01030010 - CEMENT CONCRETE FOUNDATION FOR PAVEMENT, UNREINFORCED, CLASS C (SPECIAL AREAS)
ITEM 503.01040010 - CEMENT CONCRETE FOUNDATION FOR PAVEMENT, UNREINFORCED, CLASS F (SPECIAL AREAS)

DESCRIPTION. This work shall consist of constructing an unreinforced portland cement concrete foundation for pavement in special areas, as indicated on the plans and in the proposal, in accordance with these specifications, in substantial conformance with established grades and typical cross-sections shown on the plans or established by the Engineer.

MATERIALS. Subsection 503-2 shall apply.

CONSTRUCTION DETAILS. The construction requirements of Section 503, Portland Cement Concrete Foundation for Pavement, shall apply except for the modifications indicated in these specifications. Concrete shall be placed, spread, and struck off using methods and equipment approved by the Engineer. Mechanical spreading and finishing will not be required. Concrete shall be thoroughly consolidated by immersion type vibrators.

Forms shall be wood or metal as approved by the Engineer and shall provide sufficient lateral support for placement and strike off operations. Existing curbing may be used in lieu of forms.

Before any concrete may be placed, the subbase surface shall be fine graded so that it shall not extend more than ¼ inch below or ¼ inch above true grade for the course, to a distance ahead of placement operations as determined by the Engineer. The subbase surface shall be kept in a uniformly moist condition when concrete is placed.

Concrete may be placed directly on the grade from an approved mixer by the use of metal lined, baffled chutes or other non-segregating devices. Details of these devices shall be submitted to the Engineer for his approval, prior to the start of paving operations.

Precautions must be taken to avoid segregation of the concrete during placement and spreading. Concrete shall be deposited, from the mixer, as close to its final position as possible. Excessive movement of concrete by use of vibrators or other means will not be permitted.

No concrete mixing or placing equipment will be allowed on the grade unless approval is noted in the plans or specifications.

After placing and spreading, the concrete shall be struck off to the cross-section and elevation shown on the plans or established by the Engineer using methods and equipment approved by the Engineer.

For Class F concrete the curing period shall be two days when placement is made between June 1 and September 15 and three days at all other times.

METHOD OF MEASUREMENT. Cement concrete foundation for pavement (special areas) will be measured by the number of cubic yards of concrete computed in accordance with the payment lines shown on the plans. This quantity may be adjusted by the Engineer who may establish new payment lines as needed to satisfy field conditions. No deductions shall be made for catch basins, manholes, etc.

ITEM 503.01030010 - CEMENT CONCRETE FOUNDATION FOR PAVEMENT, UNREINFORCED, CLASS C (SPECIAL AREAS)
ITEM 503.01040010 - CEMENT CONCRETE FOUNDATION FOR PAVEMENT, UNREINFORCED, CLASS F (SPECIAL AREAS)

BASIS OF PAYMENT. Subsection 503-5 shall apply.

ITEM 558.5001--25 - MEMBRANE WATERPROOFING SYSTEM FOR STRUCTURAL SLABS

1. DESCRIPTION:

1.01 This work shall consist of furnishing and applying a membrane waterproofing system where indicated on the Contract Plans. The work shall include the preparation of concrete surfaces. The Contractor shall select, furnish, and apply one of the membrane waterproofing systems included in this specification on each structure designated to receive Membrane Waterproofing System for Structural Slabs.

The Contractor has the option of using any one of the membrane waterproofing systems included in this specification, as desired. Also, substitution of one system for another may be done at will. However, only a single system may be used on any one structure, regardless of the length or design of that structure. No system may be substituted for any system which is already in any stage of installation.

2. MATERIALS:

2.01 **Membrane Waterproofing System**. The membrane waterproofing system shall consist of one of the proprietary sheet systems plus wire mesh if required. No substitutions of the proprietary portions of the applied system shall be allowed.

2.02 **Membrane Waterproofing Materials**. The membrane waterproofing shall be one of the following:

A. PREFORMED SHEET MEMBRANE MATERIALS

1. Protecto-Wrap Preformed System - shall consist of the Protecto-Wrap M-400A Bridge Membrane System as manufactured by Protecto-Wrap Company, Denver, Colorado.

2. Royston Preformed System - shall consist of Royston Bridge Membrane No. 10 A System as manufactured by Royston Laboratories, Inc., Pittsburgh, Pennsylvania.

3. Or equal as approved by the New York State Thruway Authority.

2.03 **Wire Mesh.** Wire mesh for use over subdrainage openings shall be 6mm (1/4-inch) mesh, 23 gauge hot-dipped galvanized cloth.

3. CONSTRUCTION DETAILS:

3.01 **General.** Work shall not begin on existing structural slabs until seven (7) curing days have passed subsequent to the placement of Portland cement concrete, Portland cement mortar or epoxy mortar for structural slab repair. There are various other types of concrete repair materials which have different required periods of waiting prior to safe loading. If one of these is used, the Manufacturer's instructions for allowable loading shall be followed subject to the concurrence of the Engineer.

On new structural slabs, the provisions of 557.3.14B, The Minimum Curing Period for Loading Structural Slabs, shall be met prior to membrane system placement.

Work shall not be done during inclement weather conditions or when atmospheric conditions are such that unsatisfactory results will be produced. The Engineer shall be the sole determiner of favorable atmospheric conditions. No work shall be done when the concrete structural slab temperature is below 50ºF, or ambient temperatures are below 50ºF. The concrete structural slab shall be surface dry at the time of application of the membrane waterproofing system.

3.02 **Structural Slab Cleaning.** All structural slab surfaces and any other surfaces against which the membrane waterproofing system is to be place shall be cleaned as follows:

A. All loose material, including dirt, gravel, and concrete laitance shall be removed by vacuuming or blowing with oil-free compressed air.

B. All excess laitance (surface film of concrete), road oil, other bituminous based materials, previous membrane treatments, and other foreign materials including concrete curing compounds, shall be removed by sandblasting or wire brushing and washing with water or a combination of these methods. To confirm the adequacy of the cleaning, small test patches of primer and membrane shall be applied to all area(s) in question. These test patches shall then be evaluated by the Engineer. Additional cleaning may be ordered where the Engineer determines that adhesion is not adequate.

C. Immediately prior to application of the membrane system, surface to be coated shall be recleaned of dust and other loose material by vacuuming or blowing with oil-free compressed air.

3.03 **Application of Preformed Sheet Membrane Systems**

A. **Primer Application**. After cleaning, all surfaces to be waterproofed shall be primed with the primer required for the selected preformed system. The primer shall be thoroughly mixed prior to application. Mixing shall be done with mechanical mixers or by hand mixing using clean paddles or other suitable instruments. Hand mixing shall be required for the Royston Primer.

The primer shall be applied, without dilution, using brushes, squeegees, rollers, or a combination of these methods. Spray application of the primer shall not be allowed. The primer shall be applied at the rate given in the following table so as to thoroughly and uniformly cover the surfaces. Areas of concrete which are porous and appear dry shall be given a second coat of primer.

Membrane System	Primer Application Rate
Protecto-Wrap System	Approx. 80-150 sq. ft. /gal.
Royston System	Approx. 90 sq. ft. /gal.

On vertical curb, concrete barrier, and header surfaces, the primer shall be applied and finished off, in a neat line, to a height that will be one inch higher than the height of the completed asphalt overlay. The outside face of metal scuppers shall not be primed. The inside surfaces of subdrainage outlets (weep tubes) shall be primed to a depth of at least 3 inches.

The primer shall be allowed to dry to a "tack free" condition prior to application of the preformed membrane. Excess primer, occurring as puddles or wet areas, shall be removed by brushes, or as directed by the Engineer. The appearance of bubbles in the primer is normal, due to outgassing of air and moisture in the concrete. After the primer has dried to a "tack free" condition, these bubbles shall be broken with squeegees or brooms. Unless otherwise directed by the Engineer, it shall not be necessary to repair the areas where bubbles have been broken.

Primed surfaces which the Engineer determines have become contaminated by dust or dirt shall be reprimed. Primed areas which have not been covered with preformed membrane within 24 hours of primer application shall be reprimed. All such repriming work shall be done at no additional cost to the Authority.

B. **Preformed Sheet Membrane Installation**

ITEM 558.5001--25 - MEMBRANE WATERPROOFING SYSTEM FOR STRUCTURAL SLABS

1. **General**. The manufacturer's installation instructions shall become part of this specification. The preformed membrane sheets and “flashing strips” shall be placed longitudinally on the structural slab so that both the longitudinal and transverse overlaps are formed in the direction of water drainage (See Plates 1 and 2). “Flashing strips” shall be defined to mean sections of membrane which are used to waterproof vertical surfaces and seal the intersection of the vertical surface with the structural slab. At those locations where no cross slope exists on the structural slab, the transverse water drainage shall be assumed to be from the center of the roadway toward the curbs (See Plate 1).

   Rolls of preformed sheet membrane may be applied by hand or mechanical means. The sheet shall be placed on the structural slab, sticky side down. Preformed sheet membrane flashing strips shall be placed and turned up the vertical faces of curbs, headers, scuppers, joints, and concrete barriers to a height equal to the thickness of bituminous overlay. Rolls of sheet membrane shall be placed in such a manner as to minimize wrinkles and bubbles. Stiff bristled brooms or other suitable implements shall be used at the time of application to smooth the sheet at its point of contact with the structural slab. Adjacent rolls of sheet shall overlap a minimum of 2 inches along longitudinal laps and 8 inches along transverse laps.

   The application of the sheet membrane shall proceed as follows:

   a. Before the rolls of sheet membrane are applied to the slab, flashing strips shall be applied to the vertical faces where the direction of water drainage is toward the vertical face. The "flashing strips" shall be placed so that their overlaps are formed in the direction of water drainage.

      The flashing strips shall extend up the vertical face to the depth of the bituminous overlay and a minimum of 6 inches onto the structural slab. Where required, the vertical faces shall be coated with mastic to ensure adhesion of the flashing strip (See Plate 2).

   b. At subdrainage openings (weeps), mastic shall be applied to that area of the structural slab within 6 inches of the drain opening.

   c. Rolls of preformed sheet membrane shall then be aligned parallel to the centerline of the structure and applied directly to the structural slab. The preformed sheet shall be placed within one inch of abutting vertical faces. At subdrainage openings, the membrane shall be pierced and the edges turned down and adhered to the inside of the drain. If necessary, mastic shall be used to ensure adhesion and to prevent seepage under the membrane (See Plate 2).

   d. After the rolls of sheet membrane have been applied to the slab, flashing strips shall be applied to the vertical faces where the direction of water drainage is away from the vertical face, so the flashing strip is on top of the sheet membrane.

   e. The vertical termination of the flashing strips shall be sealed with a bead of mastic (See Plate 2). The completed membrane shall be free of large wrinkles, "fish mouths", air bubbles, and other placement defects. These shall be corrected in a manner satisfactory to the Engineer. Where patches are used, the area shall be coated with mastic sealer and pieces of membrane pressed into the sealer over the defective area. The patches shall extend at least 6 inches in every direction beyond the edge of the defect. Bubbles of one inch diameter and greater shall be vented by piercing with an ice pick, or other suitable instrument, and expelling the air. Vented bubbles need not be repaired.

      To ensure adhesion to the structural slab, the preformed membrane shall be rolled with the

appropriate roller for the system utilized. Laps which have not been thoroughly sealed by rolling operations shall be sealed with mastic.

A 5-inch square piece of wire mesh shall be pressed in to mastic applied to the membrane at each subdrainage opening.

When only a portion of the membrane application is completed in one day, the exposed edge of the membrane shall be sealed with mastic. The termination edge of the membrane at slab ends and expansion joints constructed without headers shall be sealed with mastic sealer.

2. **Protecto-Wrap System**. Rolls of preformed membrane shall be placed on the structural slab, sticky side down. To minimize wrinkles and bubbles, the rolls of membrane shall be stretched into place. The membrane is interwound with polyethylene release film on the top surface. Except for the perforated edge strip, the film shall be left-in-place until the day the bituminous overlay is placed. The perforated edge strip of the polyethylene film shall be removed at the time of placement of an overlapping roll of membrane. Spliced rolls of membrane have released film on the bottom (sticky) side, so care shall be taken to ensure removal of the release film from spliced areas at the time of membrane application.

   All vertical surfaces shall be coated with mastic, to the depth of the asphalt overlay, before placement of the flashing strips.

3. **Royston System**. Rolls of membrane shall be placed on the structural slab, adhesive side down, by removing the release paper as the work progresses. The polyester film on the surface of the membrane shall not be removed.

   The narrow bands of release paper which acts as an edge strip shall be removed at the time of placement of an overlapping roll of membrane. End laps shall be sealed by heating the membrane surface to be covered with a propane torch, melting the polyester film and fusing the melted surface to the underside of the covering roll.

   Flashing strips shall be adhered to vertical surfaces by the heat-fusion method: by heating the sticky side of the membrane and pressing the heated surface into contact with the vertical face. The heat-fusion method shall be used to adhere the membrane to the inside of subdrainage outlets.

   Mastic shall not be used to adhere the flashing strips to the membrane sheets.

   Rolling shall be done with a 100-200 lb. hand roller.

   Wrinkles in the membrane may be repaired by slitting the membrane and heat-fusing the overlapping pieces.

4. METHOD OF MEASUREMENT:

4.01 The work shall be measured as a planar projection of the number of square feet of surface area as shown on the plans covered with the complete membrane waterproofing system. No separate measurement of the vertical faces of curbs, joints, concrete barriers, headers, and scuppers, or for the inside surfaces of subdrainage outlets, shall be made. No deductions will be made for holes less then one (1) square foot in area.

5. BASIS OF PAYMENT:

ITEM 558.5001--25 - MEMBRANE WATERPROOFING SYSTEM FOR STRUCTURAL SLABS

5.01 The unit price bid per square foot for this item shall include the cost of furnishing all labor, materials, (including wire mesh), and equipment necessary to complete the work.

5.02 No payment will be made for any work necessitated by damage or defacement attributable to the Contractor's operations.

5.02 No additional payment will be made for any repriming done in conformance with the requirements of Application of Preformed Sheet Membrane Systems, Subsection A, Primer Application. No additional payment will be made for patching damaged areas of a membrane system.

PLATE NO. 1

ITEM 558.5001--25

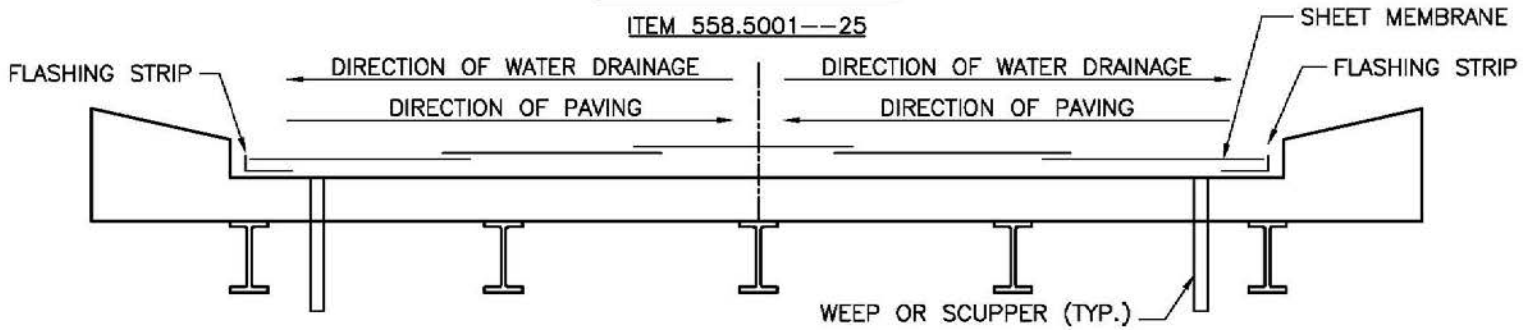

1. FLASHING STRIPS INSTALLED FIRST ALONG BOTH SWALES.
2. SHEET MEMBRANE IS INSTALLED FROM EACH SWALE TOWARD THE CENTER WITH 2 INCH MIN. TRANSVERSE OVERLAPS.

TRANSVERSE SECTION – LEVEL DECK – NO CROSS SLOPE OR NORMAL CROWN

N.T.S.

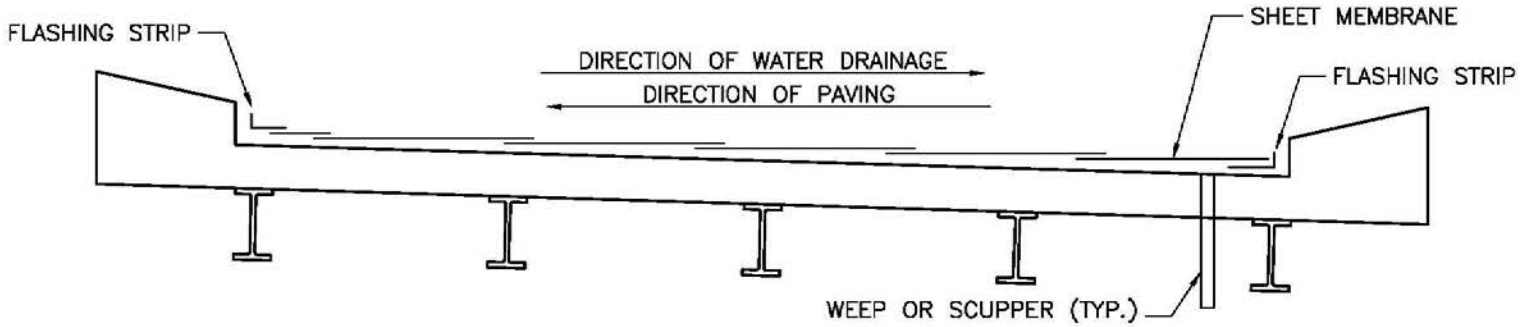

1. FLASHING STRIPS INSTALLED FIRST ALONG LOW SWALE FIRST.
2. SHEET MEMBRANE IS INSTALLED FROM THE LOW SWALE TO THE HIGH SWALE WITH 2 INCH MIN. TRANSVERSE OVERLAPS.
3. FLASHING STRIP INSTALLED ALONG HIGH SWALE LAST.

TRANSVERSE SECTION – SUPERELEVATED

N.T.S.

3/10

pw:\STRUCTURES\STRUCTURES TECHNICAL COMMITTEE\SHEET MEMBRANE PLATE 1.DWG

ITEM 558.5001--25 - MEMBRANE WATERPROOFING SYSTEM FOR STRUCTURAL SLABS

PLATE NO. 2

ITEM 558.5001--25

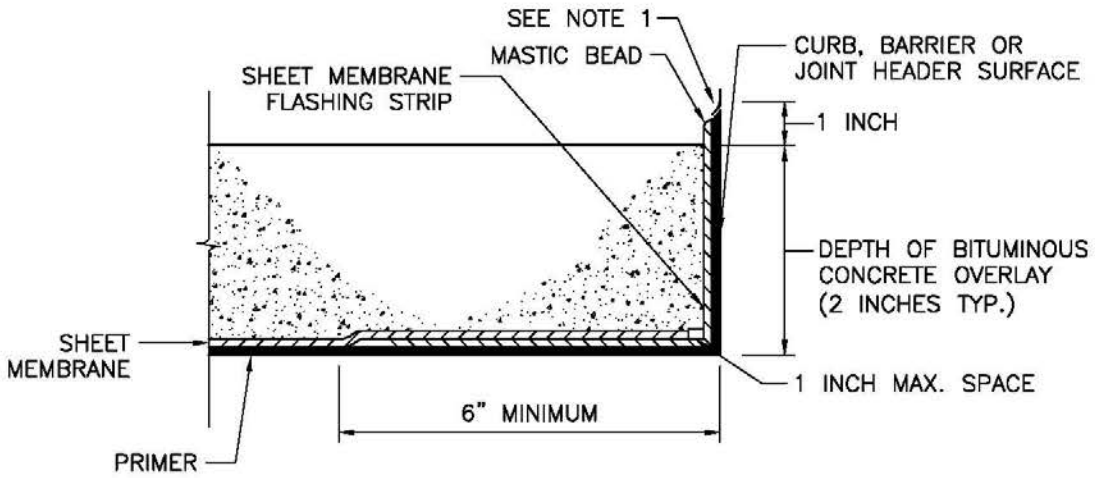

NOTES:

1. PROTECTO-WRAP M-400A - FLASHING STRIPS SHALL BE ADHERED TO ALL VERTICAL SURFACES WITH PROTECTO-WRAP 160 H MASTIC.

   ROYSTON BRIDGE MEMBRANE No. 10A - FLASHING STRIPS SHALL BE ADHERED TO ALL VERTICAL SURFACES USING THE HEAT FUSION METHOD.

TYPICAL SHEET MEMBRANE FLASHING DETAIL

N.T.S.

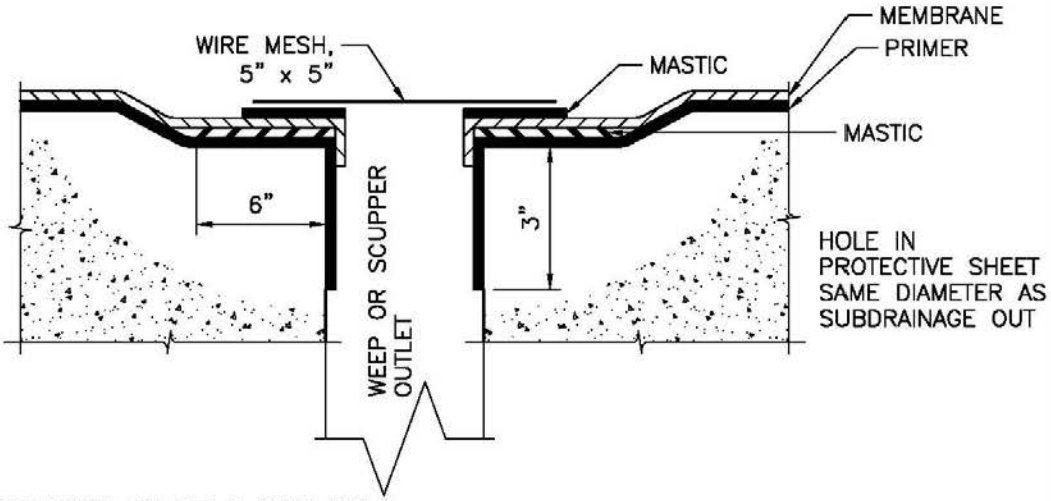

NOTES

1. PRIMER EXTENDS DOWN OUTLET 3 INCH MIN.
2. APPLY MASTIC WITHIN 6 INCH OF OUTLET.
3. PIERCE MEMBRANE AT CENTER OF OUTLET AND TURN EDGES DOWN.
4. APPLY MASTIC WITHIN 3 INCH OF OUTLET.
5. PRESS 5" x 5" PIECE OF WIRE MESH INTO MASTIC.

SHEET MEMBRANE DETAIL-SUBDRAINAGE OUTLET

N.T.S.

2/14 pw:\STRUCTURES\STRUCTURES TECHNICAL COMMITTE\SHEET MEMBRANE PLATE 2.DWG

ITEM 559.18960118 - PROTECTIVE SEALING OF STRUCTURAL CONCRETE ON NEW BRIDGE DECKS AND BRIDGE DECK OVERLAYS

DESCRIPTION. Under this work the Contractor shall furnish and apply, in accordance with this specification, a protective sealer to concrete surfaces, at locations indicated on the plans or where directed by the Engineer.

MATERIALS. The protective sealer used on new concrete bridge decks shall be one appearing on the Department's Approved List, which does not contain an aqueous solvent/carrier and shall meet the requirements of the following subsection:

717-03 - Penetrating Type Protective Sealers

CONSTRUCTION DETAILS.

A. **General.** The Contractor shall provide the Engineer with the sealer manufacturer's written instructions for application and use, at least five (5) working days before the start of work. Only one (1) brand and specific type of sealer will be allowed for use on each deck.

B. **Surface Preparation.** All concrete bridge decks shall air dry for twenty-four (24) hours after the time of completion of saw cut grooving. If the concrete is subjected to rain or moisture from other project operations, the drying period shall be extended twenty-four (24) hours from the time that the concrete has stopped being wetted. All required surface texturing, saw cut grooving, barriers, parapets, sidewalks and safetywalks shall be completed, before the surface is cleaned. After the drying period has ended, the concrete surface shall be cleaned by vacuum methods, to remove loose particles.

After cleaning, no laitance, standing water, oil, dirt or other foreign particles shall be present, which may prevent penetration of the sealer. All surface preparation work shall be completed and approved by the Engineer before sealer application can commence.

C. **Weather Limitations.** Sealer materials shall not be applied during wet weather conditions or when adverse weather conditions are anticipated within twelve (12) hours of the completion of sealer application. Ambient and surface temperatures, during application, and until the sealed concrete is dry to the touch, shall be a minimum of 40°F. Application by spray methods will not be permitted during windy conditions, if in the opinion of the Engineer, unsatisfactory results will be obtained.

D. **Sealer Application.** The protective sealer shall be used as supplied by the Manufacturer without thinning or alteration. Equipment for sealer application shall be clean of foreign materials and approved by the Engineer before use. The sealer shall be applied by brushing, spraying or rolling, as recommended by the Manufacturer.

A minimum of two (2) coats of the sealer shall be applied to achieve uniform coverage. The total quantity of sealer applied by all coats shall be equal to the quantity required at the application rate specified in the Approved List. The second and each additional coat shall be applied perpendicular to the previous coat. Care shall be taken when applying

each coat, such that running or puddling does not occur. Each coat shall be allowed to dry for a minimum of two (2) hours before the next coat is applied. The final coat shall be allowed to dry according to the Manufacturer's instructions, before the removal of maintenance and protection of traffic.

METHOD OF MEASUREMENT. The work will be measured as the number of square feet of concrete sealed.

BASIS OF PAYMENT. The unit price bid per square feet shall include the cost of furnishing all labor, materials, and equipment necessary to satisfactorily complete the work.

ITEM 567.51000016 - SEALING EXISTING BRIDGE DECK JOINTS

DESCRIPTION

The work shall consist of furnishing and installing rapid cure silicone joint sealant at the locations indicated on the plans or as directed by the Engineer.

MATERIALS

Silicone and backer rod supplied for this work shall be one of the following or approved equal:

a) Dow Corning 902 RCS - as furnished by:

SSI Commercial & Highway Construction Materials
430 S Rockford Avenue
Tusla, OK 74120

b) Wabo Two Part Silicone Sealant - as furnished by:

Watson Bowman, Acme Corp.
95 Pineview Drive
Amherst, NY 14428

Two copies of materials details for the sealant shall be supplied to the Engineer at least ten days prior to the intended use of the product.

CONSTRUCTION DETAILS

1. General. The manufacturer's recommended practices shall be strictly adhered to.

2. Surface Preparation. The Contractor shall remove existing seals, (unless otherwise noted on the plans). The surfaces to receive the sealant shall be abrasive blast cleaned of all laitance, oil, grease, or any other material which may affect the bond between the silicone and its mating surface.

3. Placement. The seal shall be placed in position in a bridge joint recess as shown on the plans or as directed by the Engineer.

4. The completed joint shall be tested and corrected in accordance with Subsection 567-3.01H "Watertight Integrity Test" or as directed by the Engineer.

METHOD OF MEASUREMENT

Payment will be made as the number of feet of joint completely resealed, measured horizontally and vertically along the centerline of joint system between the outer limits as indicated on the contract plans.

BASIS OF PAYMENT

The unit price bid per feet shall include all labor, materials and equipment necessary to complete the work.

FOR REFERENCE ONLY
(ITEM IS NOT IN CONTRACT)

ITEM 586.0310--25 – DRILLING AND GROUTING BOLTS OR REINFORCING BARS – CHEMICALLY CURING GROUT – WITH PULLOUT TESTS

1. **DESCRIPTION.** This work shall consist of furnishing and installing steel bolts, rods, or reinforcing bars, as detailed in the contract documents, into chemically curing grouted holes drilled by the contractor under this item and tested as required.

2. **MATERIALS:**

2.01 Steel bolt, rod or anchor bolt material shall be as specified in the Contract Documents.

2.02 Grout material used shall be chosen from the list below, or as specified in the Contract Documents. The ICC "ESR" numbers indicate the report in which the adhesive was tested and found acceptable for Authority use in both the un-cracked and cracked concrete condition.

SUPPLIER AND LOCATION	BRAND NAME	APPROVED IMBEDMENT TYPE	APPROVED DIAMETER RANGE	SUPPLIER AND LOCATION	BRAND NAME	APPROVED IMBEDMENT TYPE	APPROVED DIAMETER RANGE
Adhesive Technology Corp. Pompano, FL	Ultrabond 4CC (ESR-3218)	Threaded Rod	3/8" to 1 ¼"	Fischerwerke GmbH & Co. Germany	Fischer FIS EM (ESR-1990)	Threaded Rod	3/8" to 1 1/8"
						Reinforcing Bar	No.3 to No.10
Hilti, Inc Tulsa, OK	HIT-HY 200 (ESR-3187)	Threaded Rod	3/8" to 1 ¼"	Fischerwerke GmbH & Co. Germany	Fischer FIS EM cc (ESR-3390)	Threaded Rod	3/8" to 1"
		Reinforcing Bar	No.3 to No.10			Reinforcing Bar	No.3 to No.8
Hilti, Inc Tulsa, OK	HIT-RE 500SD (ESR-2322)	Threaded Rod	3/8" to 1"	Power Fasteners Inc. Brewster, NY	PE 1000+ (ESR-2583)	Threaded Rod	1/2" to 1 ¼"
		Reinforcing Bar	No.3 to No.10			Reinforcing Bar	No.3 to No.10
Simpson Strong-Tie Anchor Systems Columbus, OH	SET-XP (ESR-2508)	Threaded Rod	3/8" to 1 ¼"	ITW Red Head Inc. Addison, IL	EPCON G5 (ESR-1137)	Threaded Rod	3/8" to 1 ¼"
		Reinforcing Bar	No.4 to No.8				

3. **CONSTRUCTION DETAILS:**

3.01 Installation shall conform to Subsection 586-3.01 *Drilling and Grouting Bolts* and the grout manufacturer's installation instructions.

3.02 Pullout Tests shall conform to Subsection 586-3.02 *Pullout Testing* except that the test load shall be as specified in the Contract Documents, not from "Table 586-2 Test Loads" in the Standard Specifications.

3.03 Hole depth shall be as specified in the contract documents.

ITEM 586.0310--25 – DRILLING AND GROUTING BOLTS OR REINFORCING BARS – CHEMICALLY CURING GROUT – WITH PULLOUT TESTS

4. **METHOD OF MEASUREMENT.** The work will be measured for payment as the number of bolts, rods, or bars satisfactorily installed (including any and all testing required under 3.2 above).

5. **BASIS OF PAYMENT.** The price bid per each shall include the cost of all labor, material, and equipment, necessary to satisfactory complete the work. No additional payment will be made for extra work required to repair damage to the adjacent concrete due to the contractor's operations during installation or testing.

ITEM 603.63XXYY15 PRECAST CONCRETE BOX CULVERT (Fill Height Less than 2' – 0")
ITEM 603.64XXYY15 PRECAST CONCRETE BOX CULVERT (Fill Height 2' – 0" or Greater)
ITEM 603.65XXYY15 PRECAST CONCRETE BOX CULVERT (Bridge Size, Fill Height Less than 2' – 0")
ITEM 603.66XXYY15 PRECAST CONCRETE BOX CULVERT (Bridge Size, Fill Height 2' – 0" or Greater)

DESCRIPTION

This work shall consist of furnishing and placing single or multi-cell precast reinforced concrete box culvert sections of the type indicated in the plans in accordance with these specifications in the locations indicated and in a manner approved by the Engineer.

MATERIALS

Precast concrete box culvert shall meet the requirements of Section 706-17 Precast Concrete Box Culverts.

CONSTRUCTION DETAILS

A. Inspection, Storage and Handling – Precast box sections will be inspected at the construction site to determine any damage during shipment and for conformance to the dimensional tolerances. An additional inspection will be made prior to placement of precast box sections to determine any damage during storage.

B. Installation

1. **Excavation.** The requirements specified in Section 206 Trench, Culvert and Structure Excavation, that apply to culverts and storm drains shall govern, except as modified in the plans.

2. **Placement.** The precast manufacturer shall have a representative available to assist in the installation of the box culvert. Precast box sections shall be installed, true to line and grade, in accordance with the contract plans. Placement of the box sections shall start at the downstream end and proceed upstream, unless otherwise indicated in the contract plans.

3. **Joints.** Precast box sections shall be installed with the female end upstream and the male joints fully entered therein. The joint openings between adjacent precast units shall not exceed 3/4". The joints shall be sealed with a continuous gasket installed at the precast plant. Joints shall be drawn together with mechanical connectors, as shown on the approved working drawings. Culverts with a clear rise greater than 4' shall have a minimum of four connectors per joint. Smaller culverts shall have a minimum of two connectors per joint. The number of mechanical connectors supplied shall be equal to the number of connectors required per joint multiplied by the number of joints unless otherwise approved by the Engineer. After installation, connectors may be left on or removed at the contractor's option, unless otherwise noted in the contract plans. When the contract plans require, or the contractor chooses to leave the connectors in place, they shall be located so that they do not create an obstruction inside the culvert. Gaps which occur on the interior surfaces of the culvert due to misalignment or grade difference shall be filled as ordered by the Engineer, with an approved concrete repair material so as to produce a smooth continuous surface.

ITEM 603.63XXYY15 PRECAST CONCRETE BOX CULVERT (Fill Height Less than 2' – 0")
ITEM 603.64XXYY15 PRECAST CONCRETE BOX CULVERT (Fill Height 2' – 0" or Greater)
ITEM 603.65XXYY15 PRECAST CONCRETE BOX CULVERT (Bridge Size, Fill Height Less than 2' – 0")
ITEM 603.66XXYY15 PRECAST CONCRETE BOX CULVERT (Bridge Size, Fill Height 2' – 0" or Greater)

4. **Backfilling.** The types of materials to be used in backfilling and the procedure of placement shall conform to the contract plans and the applicable provisions of Subsection 203-3.15.

METHOD OF MEASUREMENT

The quantity to be measured for concrete box culvert sections shall be the number of linear feet (laying length) furnished and installed in the work. Linear feet (laying length) shall be measured by multiplying the number of whole units by the nominal length of each unit and adding, thereto to the length of any fractional units incorporated in the work. The nominal length of a unit or fractional unit shall be the inside measured length from one butting end to the other butting end measured along the bottom centerline of the unit.

BASIS OF PAYMENT

The quantity to be paid for shall be the number of linear feet of each size box culvert section incorporated in the work. The unit price bid shall include the cost of furnishing all labor, materials, equipment and installation supervision by the precast manufacturer's representative, necessary to satisfactorily complete the work. The cost of furnishing and installing headwalls and cut off walls shall also be included in the unit price bid.

Payment shall be made under Item 603.63XXYY15, 603.64XXYY15, 603.65XXYY15, and 603.66XXYY15, where XX and YY, as indicated in the itemized proposal shall mean the inside span and rise dimensions respectively in feet, to the nearest whole foot, of the precast section.

Maximum XX value = 24 feet
Maximum YY value = above 10 feet consult Materials Bureau.

ITEM 604.06000006 - TRENCH DRAIN SYSTEM

DESCRIPTION

This work shall consist of furnishing and installing a trench drain system and accessories in accordance with the contract documents and as directed by the Engineer.

MATERIALS

Manufacturer:

ABT, Inc PO Box 837
259 Murdock Rd
Troutman, NC 28166
800-438-6057
www.abtdrains.com

ACO Polymer Products 12080 Ravenna Rd Chardon, OH
800-543-4764
www.acousa.com

Zurn Industries, Inc. 2855 Girts Rd
Jamestown, NY 14701
716-665-1135
www.zurn.com

Or equal as approved by Engineer.

Trench drain units shall be interlocking channels and includes an attached grate meeting the requirements of §655, Frames, Grates, and Covers.

Channel units shall be able to accept connections to 4" or 6" underdrain pipe on the ends, bottom, and/or sides.

The trench drain system shall meet a design load of HS 20 and the grate shall be ADA compliant.

CONSTRUCTION DETAILS

Excavation shall be in conformance with the Construction Details of §206-3 Trench, Culvert, and Structure Excavation.

Install trench drain system with manufacturer's instructions. Drainage units shall be laid in close conformity to line and grade and have a full, firm and even bearing at each joint and along their entire length.

Backfill shall comply with §206-3.02, Structure Excavation.

METHOD OF MEASUREMENT

This work will be measured as the number of linear feet of Trench Drain System satisfactorily furnished and installed.

BASIS OF PAYMENT

The unit price bid shall include the cost of furnishing all labor, materials, and equipment necessary to satisfactorily complete the work. Excavation and backfill will be paid for under the items shown in the contract documents.

1. DESCRIPTION:

1.01 Furnish and install pre-cast concrete headwalls at lateral outlet pipes where shown in the Contract Documents.

2. MATERIALS:

2.01 **Pre-Cast Headwall:**

A. Notify the Engineer of the name and location of the pre-cast headwall fabricator at least 30 days before the start of production. Supply pre-cast headwalls meeting the requirements of §740-03, except as noted herein.

B. Use the dimensions shown on Page 2 of this specification. Proposed changes to these dimensions, other than minor changes approved by the Engineer, require submission of three (3) complete sets of working drawings to the Engineer for review and approval.

C. Mark the name or trademark of the manufacturer, the date of manufacture, and the unit identification number on the units with permanent waterproof paint.

2.02 **Rodent Screen:** Use screens #2 or #3 welded wire mesh, 16 gauge or heavier, made of Type 304 stainless steel wire or carbon steel wire, hot dipped galvanized in accordance with §719-01. A manufacturer's certification to these requirements will serve as the evidence of acceptability.

2.03 **Steel Bars:** Use ½ inch diameter, two (2) foot long deformed, or plain billet-steel bar meeting the requirements of ASTM A615 (such that it will fit in holes in head wall). The steel bar shall be either hot dipped galvanized in accordance with ASTM A123 or epoxy coated in accordance with 709-04. A manufacturer's certification to these requirements will serve as the evidence of acceptability.

3. CONSTRUCTION DETAILS:

3.01 Install each headwall with a rodent screen and two (2) steel bars as specified. Install headwalls flush with the finished slope and orient to allow the headwall apron to drain. Extend outlet pipes into the headwall fitting until flush with the installed rodent screen. Install a steel bar in each of the two (2) holes, driven to a minimum of 5/8 inch and a maximum of two (2) inches below the top surface of the headwall.

4. METHOD OF MEASUREMENT:

4.01 Headwalls will be measured by the number of units supplied and installed according to the contract documents.

5. BASIS OF PAYMENT:

5.01 Include the cost of all labor, materials, and equipment required to fabricate and install the headwalls in the unit price bid per headwall. Headwalls damaged during construction shall be replaced at the Contractor's expense.

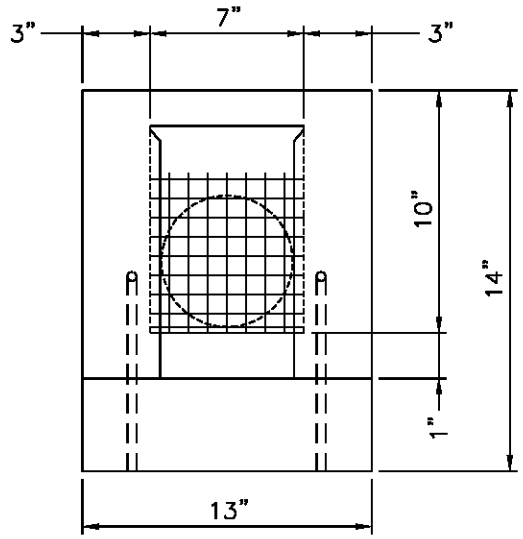

SLOTTED HEADWALL DETAIL
FRONT VIEW

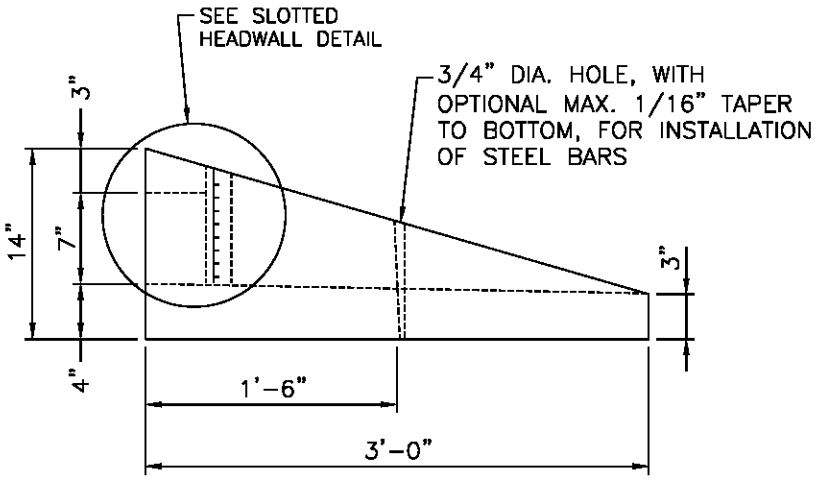

SIDE VIEW

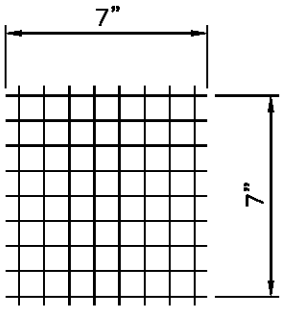

RODENT SCREEN

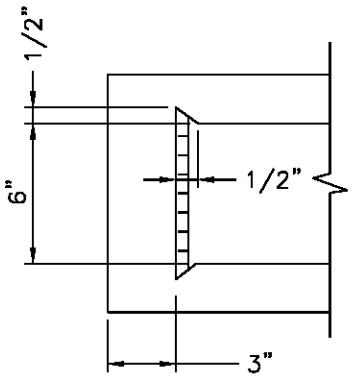

SLOTTED HEADWALL DETAIL
TOP VIEW

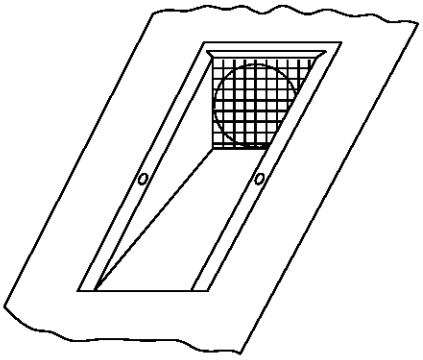

INSTALLED VIEW

NOTE:
INCLUDE THE COST OF LABOR, MATERIALS AND EQUIPMENT REQUIRED TO FABRICATE AND INSTALL THE HEADWALLS IN THE UNIT BID PRICE PER HEADWALL. HEADWALLS DAMAGED DURING CONSTRUCTION SHALL BE REPLACED AT CONTRACRTOR'S EXPENSE.

PRECAST CONCRETE OUTLET HEADWALL
6 INCH LATERAL OUTLET PIPES
ITEM 605.21015025

NTS

ITEM 606.3403--25 – END TERMINAL FOR 31-INCH HIGH HPBO (MOD.) CORRUGATED BEAM GUIDE RAILING

1. DESCRIPTION:

1.01 This work shall consist of furnishing and installing end terminals for 31-inch high Modified Heavy Post Blocked-Out (HPBO (Mod.)) Corrugated Beam Guide Railing in accordance with the Contract Documents and the manufacturer's directions and drawings.

2. MATERIALS:

2.01 Materials shall meet the requirements specified in the following subsections of Standard Specifications:

Wood and Timber Posts and Timber Blockouts	710-13
Corrugated Beam Guide Railing and Median Barrier	710-20
Plastic and Synthetic Block-Outs for Heavy Post Guide Rail Systems	710-26
Galvanized Coatings and Repair Methods	719-01
Reflective Sheeting, Class B	730-05

2.02 The posts shall be steel and of the type and dimensions indicated on the manufacturer's drawings, or where applicable the Standard Sheets.

2.03 Posts, soil plates, struts, bearing plates, impact heads, and other miscellaneous steel parts shall meet the requirements of ASTM A36 unless specified otherwise. Fasteners shall be as indicated on the manufacturer's drawings. All metal components shall be hot dip galvanized.

2.04 Reflective sheeting shall be provided by the manufacturer and shall cover the entire free end of the terminal. The reflectorization shall consist of alternating reflectorized four (4) inch yellow and non-reflectorized 4½ inch black stripes oriented at a 45 degree angle, with the lower edge of the stripes near the traveled way.

2.05 **Basis of Acceptance.** The barrier system shall be obtained from one of the manufacturers listed on the table below, or an approved equal, as approved by the Director, Office of Design.

2.06 **Basis of Approval.** End terminals shall be NCHRP 350 Test Level 3 approved.

Product	Manufacturer	Contact Information
SKT-SP-MGS Terminal 31" Top of Rail (with Hinged Posts #1 and #2; and W6x9 x 6'-0" Standard HPBO Mod. Guiderail Posts #3 through #8)	Road Systems, Inc.	Big Spring, TX (432) 263-2435 www.roadsystems.com

End terminals which can only be installed in a flared configuration will not be approved.

3. CONSTRUCTION DETAILS:

3.01 The requirements of §606-3.01 and §606-3.04 of the Standard Specifications shall apply, except as listed below:

A. The end terminals shall be installed after grading is completed at the locations indicated in the Plans, or where directed by the Engineer. Grading work shall be coordinated with the installation of the guide rail or removal of existing anchorage units to minimize the time the traveling public is exposed to unanchored runs of guide rail.

B. During periods when the public is exposed to unanchored guide rail, there shall be plastic drums, or other devices approved by the Engineer, placed in advance of the unanchored run and in advance of the ends of the rail. In addition, the ends of the rail shall be brought to the ground level, twisted over to lay flat, and shall be pinned to the ground.

C. In the event the end terminals become damaged, the units shall be promptly repaired. Unless another period is indicated in the Contract Documents, "promptly repaired" shall mean repaired with fourteen (14) calendar days.

4. METHOD OF MEASUREMENT:

4.01 The work will be measured as the number of end terminals for 31-inch high Modified Heavy Post Blocked-Out (HPBO (Mod.)) Corrugated Beam Guide Railing of the indicated type satisfactorily furnished and installed in accordance with these specifications. The payment limits for these units shall extend from the free end of the end terminal to the center of the ninth guide rail posts, which is located approximately 52 feet distant from the end.

This will not match the various lengths of the products supplied by the terminal manufacturers. Where the terminals are shorter, the Contractor shall provide 31-inch high Modified Heavy Post Blocked-Out (HPBO (Mod.)) Corrugated Beam Guide Railing to make up the difference between the product length and the payment length.

5. BASIS OF PAYMENT:

5.01 The unit bid price per end terminal for 31-inch high Modified Heavy Post Blocked-Out (HPBO (Mod.)) Corrugated Beam Guide Railing of the indicated type shall include the cost of all labor, materials, and equipment necessary to satisfactorily complete the work.

5.02 The cost of earthwork, grading, top soiling, seeding, and vegetation control strips shall be paid for separately.

ITEM 606.79100125 - REMOVE AND DISPOSE END TERMINAL FOR CORRUGATED BEAM OR HPBO GUIDERAIL AND MEDIAN BARRIER SYSTEMS

1. DESCRIPTION:

1.01 This work shall consist of removing and disposing the end terminal for corrugated beam or HPBO guiderail and median barrier systems in accordance with this specification and as directed by the Engineer. The type of end assembly shall be as indicated on the plans.

2. MATERIALS:

2.01 None specified.

3. CONSTRUCTION DETAILS:

3.01 The existing end terminal and hardware shall become the property of the Contractor.

3.02 All posts shall be removed, including any part of a post that may be broken or disconnected underground. Holes created in the removal process shall be backfilled with suitable material and compacted to the satisfaction of the Engineer.

3.03 The work of removing all types of end terminals, including post hole repair work, shall be coordinated with any adjacent guiderail or median barrier work so as to minimize the time traffic is exposed to runs of guiderail without an end terminal. Unless modified in the Contract Documents, minimization shall mean seven (7) or fewer calendar days.

3.04 During periods when the traffic is exposed to guiderail or median barrier without an end terminal, drums or other approved devices shall be placed in advance of the exposed ends of the rail as directed by the Engineer. Traffic protection shall be provided as specified in the Contract Documents.

4. METHOD OF MEASUREMENT:

4.01 The quantity to be measured for payment will be the number of end terminals removed and disposed in accordance with the Contract Documents.

4.02 Payment limits for end terminal units shall be 50 feet for right side terminals and 43.75 feet for CAT terminals.

5. BASIS OF PAYMENT:

5.01 The unit price bid for removal of each end terminal shall include the cost of all labor, materials, and equipment necessary to complete the work.

ITEM 607.0611--25 - PROTECTIVE SCREENING-BRIDGES
ITEM 607.0612--25 - PROTECTIVE SCREENING (SNOW FENCE)

1. DESCRIPTION:

1.01 The work shall consist of furnishing and installing protective screening, including all hardware and construction systems necessary to complete the work. Protective screening shall be installed according to the details and at the locations indicated on the Contract Plans.

2. MATERIALS:

2.01 Materials used for this work shall conform to the following requirements:

PART	REQUIREMENTS
Aluminum Coated Steel Fence Fabric	710-04
Posts, Rails, Braces, and Fittings	710-10
Angles and Plates	ASTM A36
U-Bolts	ASTM A307
Screening Nuts and Bolts	ASTM A307
Pipe Supports	ASTM A53
3/8” Dia. Bolts	ASTM A449 GR92
3/8” Dia. Nuts	ASTM A563 HH GR DH
3/8” Dia. Washers	ASTM F436
5/8” Dia. Anchor Rods	ASTM F1554 GR 105
5/8” Dia. Nuts	ASTM A563 HH GR DH
5/8” Dia. Washers	ASTM F436
Anchoring Material (Grout)	701-07

2.02 **Steel Fabric**

The size of the mesh and coated wire diameter shall be 1 inch and 11 gage respectively unless otherwise specified in the plans or Proposal.

All edges of the fence fabric shall be “knuckled” (wire ends bent back upon themselves to eliminate sharp wire ends).

2.03 **Posts, Rails and Fittings**

All materials, except fence fabric, shall be galvanized. Unless otherwise specified on the plans, galvanizing shall be in accordance with the requirements of Subsection 719-01, type as applicable.

Unless otherwise noted on the plans:

a. Posts shall be nominal 2 ½ inch Schedule 40 Pipe.

b. Top and Bottom rails shall be a nominal 1 ¼ inch Schedule 40 Pipe.

c. Pipe supports shall be nominal 1 ½ inch Schedule 80 Pipe.

3. CONSTRUCTION DETAILS:

ITEM 607.0611--25 - PROTECTIVE SCREENING-BRIDGES
ITEM 607.0612--25 - PROTECTIVE SCREENING (SNOW FENCE)

3.01 **Fence Fabric**

Fence fabric shall be firmly attached to the posts, rails, and braces. All wire shall be stretched taut and be installed to the required elevations.

3. CONSTRUCTION DETAILS: (cont'd)

3.01 **Fence Fabric** (cont'd)

Unless otherwise noted on the plans:

a. The fabric shall be securely fastened to all terminal posts by ¼ inch Dia. round tension bars with 11 gauge pressed steel bands spaced approximately 1 foot apart.

b. Fabric shall be attached to top and bottom rails with 6 gauge tie wires at 2 foot centers.

c. The fabric shall be securely fastened to all vertical posts by 6 gauge aluminum ties at 1 foot centers.

3.02 **Fence Posts**

The posts shall be fastened to the structure in accordance with the details indicated on the Contract Plans. Fence posts shall be set so that they are truly vertical.

3.03 **Fence Rails**

a. All the top rails shall pass through the base of the post caps and shall form a continuous brace from end-to-end of each stretch of fence fabric. Top rail lengths shall be joined with sleeve couplings. At expansion joints of the structure, expansion sleeves shall be used. Top rails shall be securely fastened to terminal posts by means of rail end connectors approved by the Engineer. Horizontal braces shall be provided at all terminal posts, midway between the top and bottom rails, and shall extend from the terminal post to the first adjacent intermediate post. Braces shall be securely fastened to the intermediate posts by brace ends and brace bands. Braces shall be securely fastened to the terminal posts by rail end connectors, approved by the Engineer. Braces shall be made from the same material as the top and bottom rails.

Unless otherwise noted on the plans:

b. If a tension wire is required by the Contract Documents, the fabric shall be attached to it with 6 gauge aluminum ties.

3.04 **Welding**

All welding shall meet the requirements of Section 203, Welding, of the New York State Steel Construction Manual.

ITEM 607.0611--25 - PROTECTIVE SCREENING-BRIDGES
ITEM 607.0612--25 - PROTECTIVE SCREENING (SNOW FENCE)

Field welding shall be allowed only where indicated on the Contract Plans, or where ordered by the Engineer.

All finished surfaces of welds, and surfaces from which the galvanizing has been removed, shall be repaired in accordance with the requirements of Subsection 719-01. Any galvanizing repair shall be done at the Contractor's expense.

3.05 **Drilling and Grouting**

Drilling and grouting of anchor rods shall be done in conformance with the grout manufacturer's requirements. Minimum Imbedment depth shall be as shown on the contract plans. Cured grout material shall be capable of developing the ultimate strength of the anchor rod. Grout Material used shall be chosen from NYSDOT approved list for Chemically Curing Capsule and Pourable Anchoring Materials (701-07).

4. METHOD OF MEASUREMENT:

4.01 Measurement will be taken as the number of linear feet of protective screening installed.

4.02 Measurement will be taken along the bottom of the bottom rail, center-to-center to terminal posts.

5. BASIS OF PAYMENT:

5.01 The unit price bid per linear foot shall include the cost of furnishing all labor, materials, and equipment necessary to complete the work.

Payment will be made under:

ITEM NO.	DESCRIPTION	PAY UNIT
607.0611 25	Protective Screening – Bridge	Linear Foot
607.0612 25	Protective Screening (Snow Fence)	Linear Foot

ITEM 619.0801xx25 – REMOVE PAVEMENT MARKING STRIPES (6 INCHES)

1. DESCRIPTION:

1.01 The provisions of Section 619-1.05 shall apply.

2. MATERIALS:

2.01 The provisions of Section 619-2.05 shall apply.

3. CONSTRUCTION DETAILS:

3.01 The provisions of Section 619-3.05 shall apply.

4. METHOD OF MEASUREMENT:

4.01 The provisions of Section 619-4.05 shall apply except as follows:

A. The quantity to be measured for payment will be in feet to the nearest whole foot along the centerline of the pavement stripes covered or removed and will be based on a 6-inch wide stripe. No measurement will be made for the gaps between broken and dotted line segments.

B. Measurement for covering or removal of striping with a width greater than 6 inches will be made by the following method:

$$\frac{\text{Width of Striping (in) x Number of Feet}}{\text{6 (in)}}$$

5. BASIS OF PAYMENT:

5.01 The provisions of Section 619-5.05 shall apply except as follows:

xx = Material

01 = Traffic Paint
02 = Epoxy Paint
03 = Removable Tape
04 = Removable Wet Reflective Tape
05 = Traffic Paint Supplemented with Raised Markers

ITEM 619.1001xx25 – INTERIM PAVEMENT MARKINGS, STRIPES (6 INCHES)

1. DESCRIPTION:

1.01 All applicable provisions of Standard Specification §619-1 shall apply.

2. MATERIALS:

2.01 All applicable provisions of Standard Specification §619-2 shall apply.

3. CONSTRUCTION DETAILS:

3.01 All applicable provisions of Standard Specification §619-3 shall apply.

4. METHOD OF MEASUREMENT:

4.01 The provisions of Section 619-4.07 shall apply except as follows:

A. The quantity to be measured for payment will be in feet to the nearest whole foot along the centerline of the pavement stripes installed and will be based on a 6-inch wide stripe. No measurement will be made for the length of skips in the dashed line.

B. Measurement for installation of striping with a width greater than 6 inches will be made by the following method:

$$\frac{\text{Width of Striping (in)} \times \text{Number of Feet}}{6\ \text{(in)}}$$

5. BASIS OF PAYMENT:

5.01 All applicable provisions of Standard Specification §619-5 shall apply.

NOTE: xx = Material

01 = Traffic Paint
02 = Epoxy Paint
03 = Removable Tape
04 = Removable Wet Reflective Tape
05 = Traffic Paint Supplemented with Raised Markers

ITEM 619.1706--25 - LINEAR DELINEATION SYSTEM (L.D.S.)

1. DESCRIPTION:

1.01 Under this item the Contractor shall furnish and install a linear delineation system on temporary concrete barrier. The system shall consist of segmented panels adhered to the barrier.

2. MATERIALS:

2.01 **General Requirements:**

A. Each panel shall be 34 inches long by 6 inches wide.

B. Each panel shall be constructed of retroreflective material permanently bonded to an aluminum substrate. The panels shall have a repeating raised lateral ridge approximately every 2 ½ inches, 1/3 of an inch in height, with a 45° profile.

C. The panels shall adhere to concrete barriers systems.

2.02 **Color:**

A. Conformance to the daytime color requirements shall be determined from measurement of the retroreflective sheeting applied to aluminum test panels. Daytime color shall be measured instrumentally using a spectrophotometer employing annular 45/0 (or equivalent 0/45) illuminating and viewing geometry.

B. Color measurements shall be made in accordance with ASTM E1164 for white and ASTM E2153 for fluorescent yellow. Chromaticity coordinates shall be calculated for CIE Illuminant D65 and the CIE 1931 (2o) Standard Colorimetric Observer in accordance with ASTM E308 for white and ASTM E2152 for fluorescent yellow.

C. **Chromaticity Limits for White**

	x	y	x	y	x	y	x	y	**Limit Y (%) Min.**	**Max.**
White	0.303	0.287	0.368	0.353	0.340	0.380	0.274	0.316	40	--

D. **Chromaticity Limits for Fluorescent Yellow**

	x	y	x	y	x	y	x	y	**Total Luminance Factor Y_T (%) Min.**
Fluor. Yellow	0.521	0.424	0.557	0.442	0.479	0.520	0.454	0.491	40

The minimum fluorescence luminance factor (Y_F) values of the retroreflective sheeting conform to:

Color	**Y_F (%) min.**
Fluor. Yellow	25

2.03 Adhesive – 3M Windo-Weld Super Fast Urethane (#08609) or approved equal.

ITEM 619.1706--25 - LINEAR DELINEATION SYSTEM (L.D.S.)

2.04 Section 715-16 – Stainless Steel Connecting Products.

2. MATERIALS: (cont'd)

2.05 Section 701-07 – Anchoring Materials Chemically Curing.

3. CONSTRUCTION DETAILS:

3.01 Linear Delineation System (L.D.S.) panels shall be applied to all temporary concrete barrier units that are installed tangent to the traveled way.

3.02 Panels shall be adhered 6 inches below the top of the temporary concrete barrier.

3.02 Panels shall be spaced 86 inches apart.

3.03 Gaps between panels may be modified AOBE for temporary concrete barrier units that are not 20 feet in length.

3.04 White panels shall be used to the right of the traveled way. Fluorescent yellow panels shall be used to the left of the traveled way.

3.05 Temporary concrete barrier installed in narrow medians shall have yellow panels installed on both sides of the barrier. In all installations an adhesive caulking system such as 3M Windo-Weld Super Fast Urethane, or approved equal, shall be utilized in supplementing mechanical anchorage. Mechanical Anchorage shall be done in accordance with Section 586-3.02 and 586-3.04.

3.06 Materials shall be installed on temporary concrete barrier in accordance with the manufacturer's recommendations.

3.07 The Contractor shall be responsible for maintenance of the Linear Delineation System. Any materials that fail to provide both daytime and nighttime delineation shall be replaced immediately by the Contractor. The replacement of unsatisfactory material shall be as directed by and to the satisfaction of the Engineer and shall be at no cost to the Authority.

3.08 Temporary concrete barrier installed at the option of the Contractor, or required solely by a delay in the Contractor's operations, shall include a Linear Delineation System.

4. METHOD OF MEASUREMENT:

4.01 Linear Delineation System will be measured as the number of linear feet satisfactorily installed on temporary concrete barrier.

4.02 No measurement will be made for the number of linear feet of gaps between delineation panels.

5. BASIS OF PAYMENT:

5.01 The unit price shall include the cost of furnishing all labor, materials, and equipment necessary to satisfactorily complete the work.

5.02 Payment will be made upon satisfactory installation of temporary concrete barrier with Linear Delineation System attached.

5.03 Payment will be made for the length of Linear Delineation installed.

ITEM 619.1706--25 - LINEAR DELINEATION SYSTEM (L.D.S.)

5. BASIS OF PAYMENT: (cont'd)

5.04 No payment will be made for a Linear Delineation System installed on temporary concrete barrier that is installed at the option of the Contractor, or required solely by a delay in the Contractor's operations.

5.05 Payment for this item will only be allowed once in this contract for each temporary concrete barrier unit. No payment will be made for a subsequent movement of the barrier unit unless a different color is required.

ITEM 620.12----25 - STAMPED CONCRETE SLOPE PROTECTION

1. DESCRIPTION:

1.01 Under this item the Contractor shall construct a Bomanite/Bomacron Portland Cement concrete surfacing or approved equal by the Engineer on a prepared subbase, having the surface colored and imprinted with a pattern, of 4 in. thickness at locations shown on the plans or as directed by the Engineer. The pattern and color shall be as indicated on the plans.

2. MATERIALS:

2.01 The following materials shall meet the requirements specified in Section 700 – Materials:

Portland Cement	701-01
Coarse Aggregates	703-02
Concrete Sand	703-07
Wire Fabric for Concrete Reinforcement	709-02
Admixtures	711-08
Water	712-01
Metal Coatings	719-01

2.02 Concrete shall meet the requirements of Subsection 501, except that it shall have a minimum 28-day compressive strength of 4,000 psi and Air Content of 6.5%. Only air entraining and/or Set Retarding, Water Reducing (ASTM TYPE D) admixtures appearing on the NYSDOT Approved List will be permitted. The Contractor shall be responsible for designing the concrete mix and submitting it to the Engineer for approval.

2.03 Portland Cement shall be Type 1, 2 or 5.

2.04 Release agent shall be LITHOCHROME® Chemstain® as manufactured by L.M. Scofield Company (800) 800-9900, or approved equal by the Engineer.

3. CONSTRUCTION DETAILS:

3.01 The general construction details for manufacturing, transporting and placing concrete shall meet the requirements of Section 501, Portland Cement Concrete – General.

3.02 The concrete shall be placed on the prepared subbase in one (1) course to the full depth of 4 in.

3.03 Galvanized wire fabric for concrete reinforcement shall be set a mid-depth of the slab. Wire fabric shall be sized as such that a minimum reinforcement ratio of 0.0018 is provided, longitudinally and transversely. Wire fabric shall be tied to continuous, non-conductive chairs, which are securely imbedded into the subbase course to prevent shifting of the reinforcement mat during concrete placement.

3.04 The concrete shall be placed and screeded to the finished grade and floated to a uniform surface.

3.05 Release agent shall be applied evenly to the surface, as required.

3.06 While concrete is still in the plastic stage of set, the imprinting tool shall be applied to make the desired impression to the surface in accordance with the plans, specifications, or as ordered by the Engineer. Impressions shall not be deeper than ½ in.

ITEM 620.12----25 - STAMPED CONCRETE SLOPE PROTECTION

3. CONSTRUCTION DETAILS: (cont'd)

3.07 The surface shall be scored at intervals shown on the plans by means of a tool or may be sawcut to a depth of 1 in. If the sawcutting option is used, the sawcutting must be performed later that same day. Scoring/sawcutting shall be placed at every change in cross slope and longitudinally at intervals not to exceed 16 ft.

3.08 After initial set, the slab shall be pressure washed to remove excess release agent. At the completion of the curing period, the surface shall be allowed to dry before the surface is sealed with two (2) coats of a sealer appearing on the NYS Department of Transportation's Approved List. The second sealer coat shall be applied perpendicular to the first coat. Curing procedures shall meet the requirements of Section 502-3.11 – Curing.

4. METHOD OF MEASUREMENT:

4.01 The quantity of this work shall be the number of square feet of stamped concrete slope protection satisfactorily installed in accordance with the plans and specifications.

5. BASIS OF PAYMENT:

5.01 The unit bid price per square feet shall include the cost of furnishing all labor, material, and equipment necessary to complete the work, including galvanized wire fabric reinforcement, support chairs, and protective sealer. Necessary excavation and subbase course shall be paid under their respective items.

ITEM 620.12----25 - STAMPED CONCRETE SLOPE PROTECTION

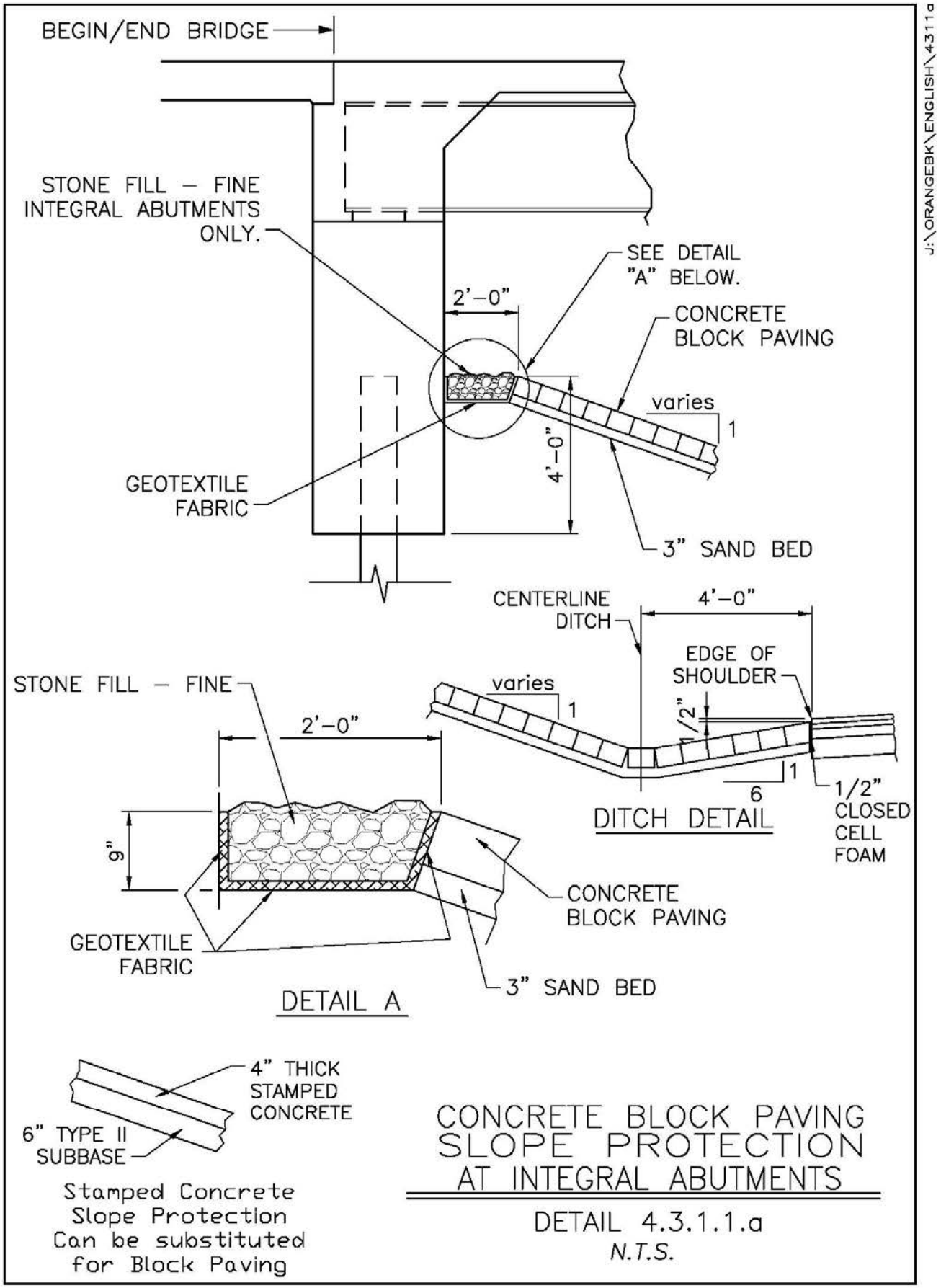

06/14 PEP

ITEM 620.12----25 - STAMPED CONCRETE SLOPE PROTECTION

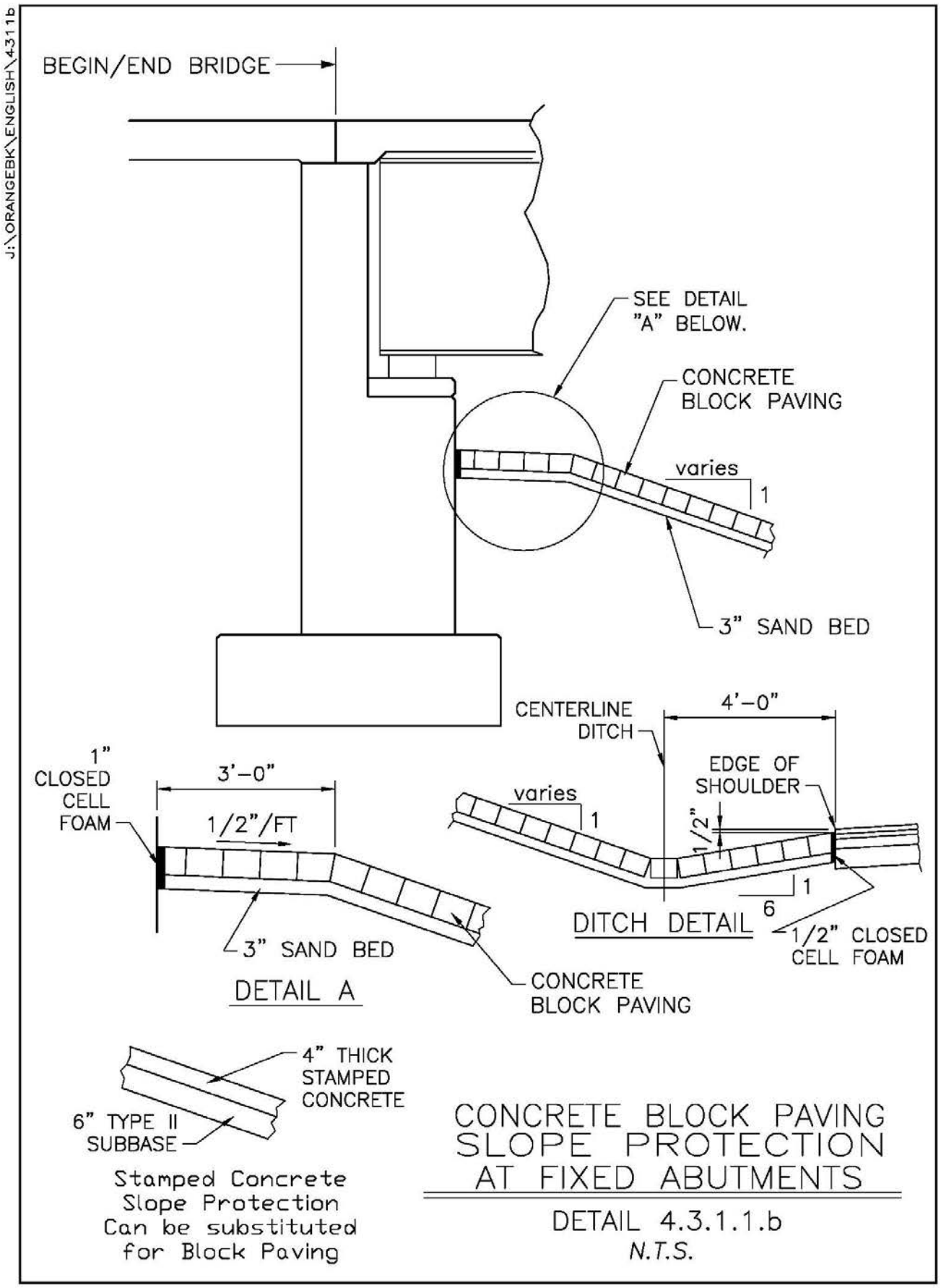

06/14 PEP

ITEM 620.12----25 - STAMPED CONCRETE SLOPE PROTECTION

Running Bond Used Brick

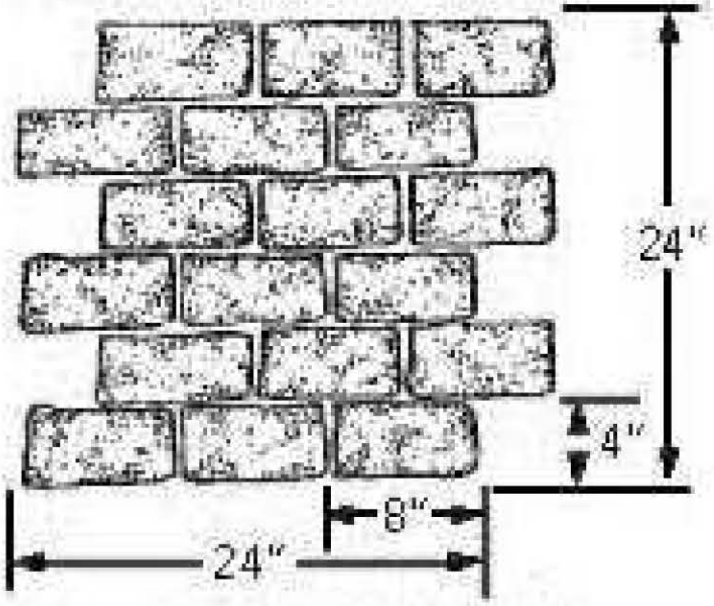

Also available in 2¼" x 7½"

Flagstone

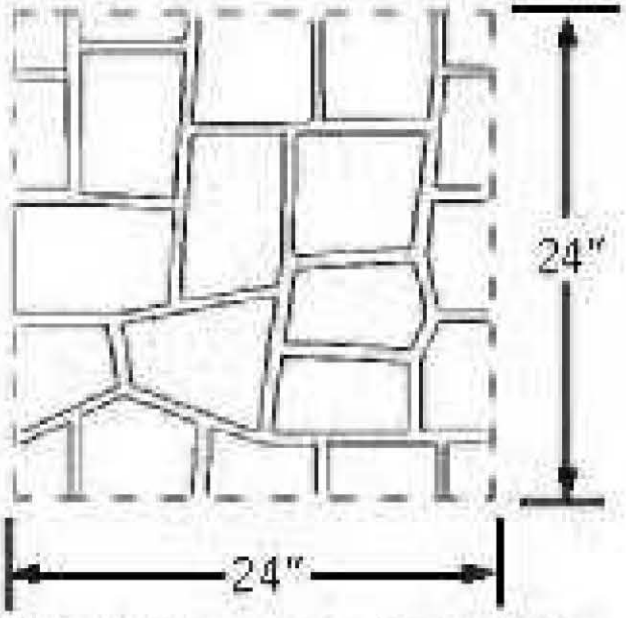

Individual stones vary in size from 4" x 7" to 5½" x 7½"

ITEM 620.12----25 - STAMPED CONCRETE SLOPE PROTECTION

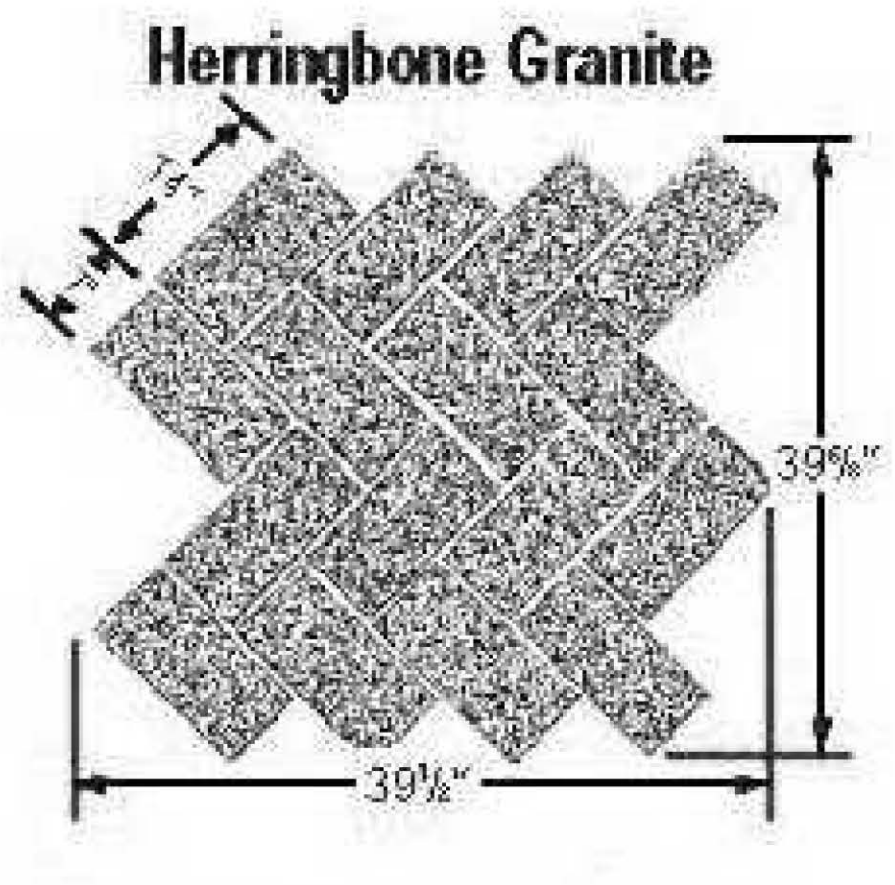

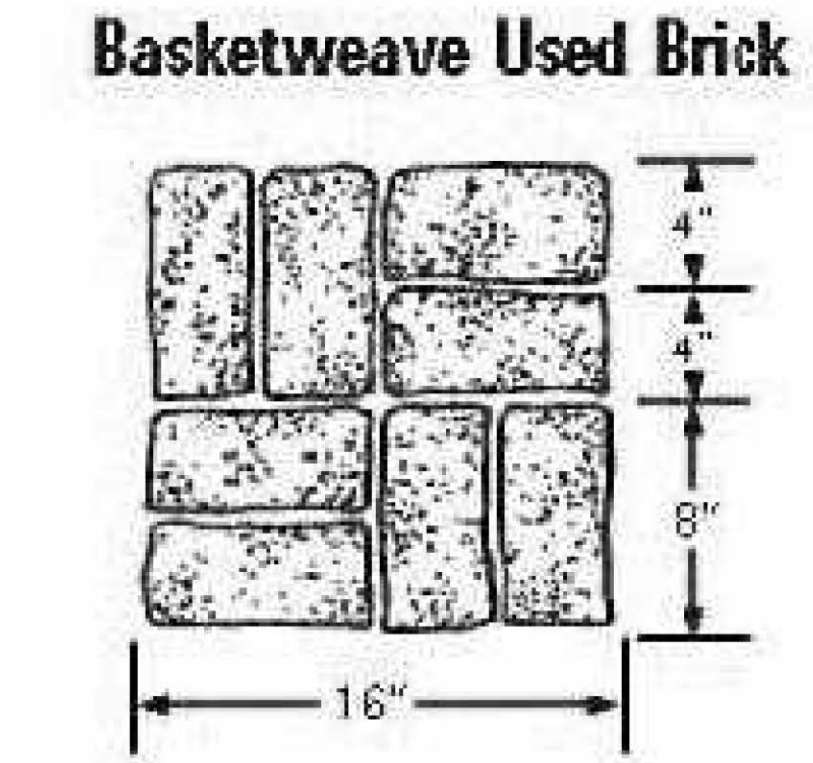

ITEM 620.12----25 - STAMPED CONCRETE SLOPE PROTECTION

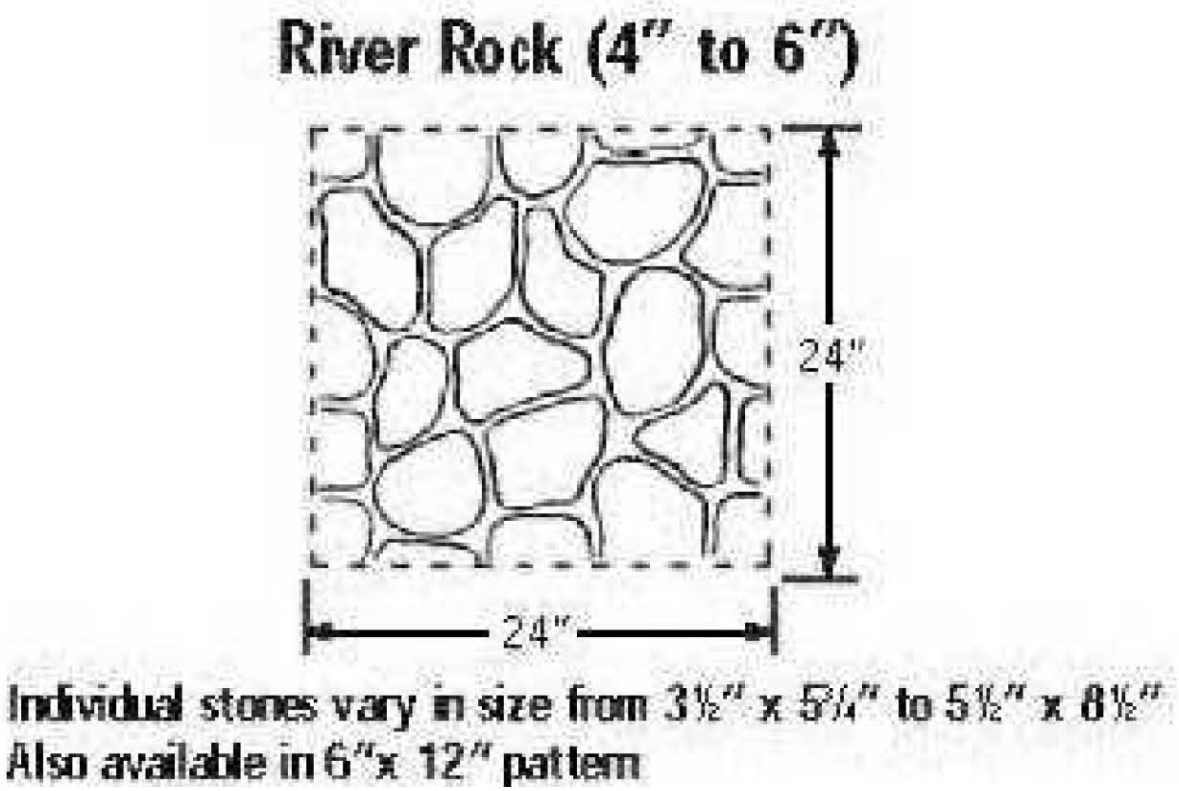

ITEM 627.50140008 - CUTTING PAVEMENT

DESCRIPTION:

The contractor shall cut existing asphalt pavement, concrete pavement, asphalt surface course, or asphalt concrete overlay on concrete pavement at the locations indicated and detailed on the plans and as directed by the Engineer.

MATERIALS:

None specified.

CONSTRUCTION DETAILS:

Existing pavement and overlay shall be cut perpendicular to the roadway surface along neat lines, and to the depth indicated on the plans and typical sections, using appropriate equipment. After the pavement has been cut through, the Contractor may use pry bars, pneumatic tools or other methods, to pry loose the pavement to be removed from the pavement that is to remain. A pavement breaker may be used to break up the pavement to be removed after the pavement has been completely cut through and completely free from the pavement to remain.

When pavement cutting is called for in the Contract documents, if a neat vertical face with minimal shatter is obtained by performing an adjacent operation (such as milling) which eliminates the need to perform a separate pavement cutting operation, payment will be made for both the pavement cutting item and the item for the adjacent operation.

Any existing pavements and curbs not indicated to be removed that are damaged by the contractor's operations, shall be repaired at no additional cost to the State. Pavement cutting that the contractor chooses to do for his/her own convenience shall not receive any additional payment from the State.

METHOD OF MEASUREMENT:

The quantity to be measured will be the number of linear feet of pavement cutting satisfactorily completed.

BASIS OF PAYMENT:

The unit price bid per linear foot of pavement cutting shall include the cost of all labor, materials, and equipment necessary to satisfactorily complete the work.

Payment for prying, breaking, removal and disposal of cut pavement shall be made through other appropriate items.

ITEM 635.04030225 - RECESS DIAMOND GRINDING FOR INLAID PAVEMENT MARKINGS

1. DESCRIPTION:

1.01 This work shall consist of grinding bituminous or portland cement concrete pavement surfaces for recessing pavement markings.

2. MATERIALS:

2.01 None specified.

3. EQUIPMENT:

3.01 Grinding equipment shall have free-floating cutting heads to provide a consistent groove slot depth over irregular pavement surfaces. The cutting heads shall have diamond saw blades only; no other type will be permitted. Grinding equipment shall be capable of producing a final pavement surface that has perpendicular vertical sides and a smooth, flat bottom free of ridges.

4. CONSTRUCTION DETAILS:

4.01 The work required to grind pavement surfaces for inlaid pavement surfaces shall be performed in accordance with these specifications, the contract documents and to the satisfaction of the Engineer.

4.02 Areas receiving pavement markings shall be ground to a depth of 80± mils. The grinding width shall exceed the pavement marking width by a total of 1 inch.

4.03 Line segments in broken lines and dotted lines shall be ground to provide the ±80-mil depth along the entire specified length of the marking.

4.04 **Wet Saw Blade Operation.** If grinding is done with water, the groove shall be immediately flushed with high pressure water to avoid build-up and hardening of slurry. The pavement surface shall be dry prior to application of the pavement markings.

4.05 **Dry Saw Blade Operation.** If grinding is done with dry saw blades, dust and debris shall be immediately removed by vacuuming.

4.06 The pavement shall be returned to a debris-free condition prior to re-opening to traffic.

4.07 **Disposal of Material.** Millings and/or grinding slurry shall be removed and disposed as non-hazardous industrial waste according to Section 107-10.

5. METHOD OF MEASUREMENT:

5.01 Recess diamond grinding will be measured in feet along the centerline of the prepared surface and will be based on a 7-inch-wide groove (6-inch-wide stripe plus ½ inch each side).

6. BASIS OF PAYMENT:

6.01 The unit price bid shall include the cost of all labor, materials, and equipment necessary to complete the work. The cost of maintaining and protecting traffic during recess diamond grinding operations and cleaning and drying the grooved surfaces shall be included in the price bid.

6.02 No payment will be made for grinding beyond the specified length of the line segments in broken lines and dotted lines.

ITEM 637.11----25 – ENGINEER'S FIELD OFFICE – TYPE 1
ITEM 637.12----25 – ENGINEER'S FIELD OFFICE – TYPE 2
ITEM 637.13----25 – ENGINEER'S FIELD OFFICE – TYPE 3
ITEM 637.14----25 – ENGINEER'S FIELD OFFICE – TYPE 4
ITEM 637.15----25 – ENGINEER'S FIELD OFFICE – TYPE 5

1. **DESCRIPTION.** This work shall consist of providing, for the Engineer's use a building, or a portion thereof, or a modular trailer of a specified type erected at a location approved by the Engineer. In addition, all computer hardware, software and internet communications described in this specification shall be provided for the duration of the contract.

2. **MATERIALS:**

2.01 **Engineer's Field Office.** The Engineer's Field Office shall be within a secured, weatherproof building or mobile trailer. If two (2) or more mobile trailer units are provided, they shall be joined with weatherproof connections. Mobile trailers shall be in new or like new condition. The Contractor may furnish equivalent facilities in an existing building, provided that the building is located to provide convenient service. The Contractor shall supply the Engineer with a copy of the Certificate of Occupancy for the existing building.

The Engineer's Field Office shall be in accordance with the requirements of the New York State Uniform Fire Prevention and Building Code, 19 NYCRR, and any applicable local codes.

The electrical system shall be able to continuously operate all equipment and be provided with adequate receptacles. To accommodate computer equipment, the field office shall be provided with a dedicated 20 amp electrical service and a vacant floor-to-ceiling area with a 39 inch by 39 inch footprint along a wall for the installation of a computer hardware rack/cabinet. Electric light shall be provided by non glare-type luminaires to provide a minimum illumination level of 1,000 lux at desk-height level. An ambient air temperature of 70 °F ±10 °F shall be maintained.

Fire extinguishers and smoke and carbon monoxide detectors shall be provided and installed.

The Engineer's Field Office shall be partitioned to provide separate rooms, defined as either "small" or "large", with adjoining doors. Table 637-1 contains the minimum area requirements for each of the office types.

TABLE 637-1 ENGINEER'S FIELD OFFICE AREA REQUIREMENTS

Physical Requirement	Engineer's Field Office Type				
	1	2	3	4	5
Min. total floor area (ft^2)	540	860	1300	2475	2700
Min. number of small rooms	2	3	2	3	6
Min. floor area of each small room (ft^2)	100	100	120	150	175
Min. number of large rooms	1	1	2	2	2
Min. floor area of each large room (ft^2)	200	200	240	300	350

A. **Potable Water.** From a local municipal water supply, certified well or bottled with a heating/refrigerator unit to provide hot and cold water. An exterior frost-free hose bib shall be provided in a location adjacent to the Engineer's Field Office. The hose bib need not be installed on a potable water line, and if the water in the line is not potable, it shall be clearly marked as such.

ITEM 637.11----25 – ENGINEER'S FIELD OFFICE – TYPE 1
ITEM 637.12----25 – ENGINEER'S FIELD OFFICE – TYPE 2
ITEM 637.13----25 – ENGINEER'S FIELD OFFICE – TYPE 3
ITEM 637.14----25 – ENGINEER'S FIELD OFFICE – TYPE 4
ITEM 637.15----25 – ENGINEER'S FIELD OFFICE – TYPE 5

B. **Restroom.** A separately enclosed room, lockable from the inside, that is properly ventilated and in compliance with applicable sanitary codes. The Contractor shall provide all lavatory amenities, necessary paper and soap products, hot and cold running water and a toilet. The toilet shall be flush-type where sanitary facilities are available, and a type approved by the Engineer prior to installation where sanitary facilities are not available. The minimum required number of restrooms to be provided is specified in Table 637-2.

C. **Parking Area.** The Contractor shall provide and/or construct paved or hard surfaced (gravel or bankrun material) secure parking area with dedicated parking spaces adjacent to the Engineer's Field Office. Each parking space shall be 9 feet by 18 feet, and the minimum required number of spaces to be provided is specified in Table 637-2.

D. **Field Office Signs.** The sign panel material shall be aluminum, fiberglass, plywood or lightweight plastic. The sign sheeting shall be ASTM Type III. The sign panel shall be 36 inches high by 48 inches wide with white legend on green background with the phrases as positioned and described below. If erected at a location where the sign might be struck by an errant vehicle, the sign support shall be a breakaway type.

The letters in the phrase "FIELD OFFICE" shall be 6 inch C series with the top of the letters 6 inches below the top of the panel. The letters in the phrase "ENGINEER-IN-CHARGE" shall be 6 inch B series with the top of the letters 18 inches below the top of the panel. The letters in the phrase "N.Y.S. THRUWAY AUTHORITY" shall be 1½ inch E series with the top of the letters 30 inches below the top of the panel. All phrases shall be centered horizontally on the panel.

If the Engineer's Field Office is not located within or adjacent to the contract limits, two (2) additional signs shall be displayed conspicuously within the contract limits. The signs shall be similar to the above description, except that they shall be 48 inches high by 64 inches wide and have an additional bottom line of text containing the street address of the Engineer's Field Office. The letters in the street address shall be 6 inch B series with the top of the letters 36 inches below the top of the panel and centered horizontally on the panel.

E. **Mailbox.** Standard mailbox (with post if necessary) or post office box meeting the requirements of the U.S. Postal Service.

F. **Telephone and Answering System.** A separate telephone and digital answering system for the exclusive use of the inspection staff. The minimum required number of telephone voice lines to be provided is specified in Table 637-2 (these lines are in addition to the separate lines to be provided for the facsimile machine and dial-up computer access if high speed internet access is not available where the field office is located). The telephone and answering system shall provide the ability to answer all voice lines from each voice line, transfer calls to all voice lines and be equipped with a single, dedicated answering system.

A minimum of one (1) telephone shall be cordless and a minimum of one (1) telephone shall be equipped with speaker and conference call capability. The remaining telephones, at least one (1) per required voice line, shall be extension telephones with minimum 25 foot long cords. The digital answering system shall be capable of recording outgoing messages up to 60 seconds long and receiving a minimum of 40 incoming messages of 60 seconds duration. The system must include automated voice marking of time and day of each message received and provide a message mark so

that new messages may be played back without erasing old messages. The system shall include remote programming of playback, backspace, and outgoing message re-record and allow for the retrieval of messages without a remote control unit.

G. **Facsimile Machine.** Plain paper laser or inkjet facsimile machine with a dedicated telephone line. The machine shall be capable of sending and printing a maximum paper size of 8½ x 14 inches, have a minimum 20-page memory storage, a minimum 20-sheet document feeder, a minimum 50-sheet paper capacity, transmit at least 6 pages per minute and have an autodial/redial with a minimum of 50 phone number memory. The machine shall be capable of storing and printing outgoing message confirmation information and printing the sender's name, fax number and page number on incoming faxes.

H. **Photocopier.** Heavy duty, electric, dry-process photocopying machine. The machine shall be an all-in-one copy machine with black & white and color copying, black & white and color printing and black & white and color scanning capabilities. Machine shall have at least three paper bins (8½ x 11 inches, 8½ x 14 inches and 11 x 17 inches), enlarging and reducing capabilities, and collating, sorting stapling and double-sided copying. Set-up, printer drivers, software and networking are required. All on-site staff email addresses shall be set up and programmed for ease of scanning. Maintenance shall be provided, as required, including repairs and all necessary toner cartridges and staples for the life of the contract and until final completion. One (1) case (5,000 sheets, 20 lb, white) of each paper size shall be provided as initial stock.

I. **Paper Shredder.** Automatic start, heavy duty cross-cut paper shredder. The shredder shall be able to receive 8½ inch wide paper and shred a minimum of 15 sheets simultaneously along with CDs and staples.

J. **Pencil Sharpener.** Manual or electric pencil sharpener, minimum 1 per room.

K. **Exterior Bulletin Board.** An installed 4 foot by 8 foot weatherproof bulletin board in front of or adjacent to the Engineer's Field Office. The bulletin board may be attached to an outside wall of the office. The location selected must be handicapped accessible and clearly visible.

L. **Interior Bulletin Board.** An installed, wall-mounted 4 foot by 6 foot bulletin board made of cork or similar material in a large room, and one (1) 2 foot by 4 foot wall mounted bulletin board installed per room.

M. **Dry Erase Board.** Installed, wall-mounted 2 foot by 4 foot dry erase boards, minimum one (1) per room.

N. **Storage Locker.** Metal or wood storage locker with shelves, a tumbler lock and two (2) keys for the storage of survey, GPS and testing equipment. The total locker space footprint provided shall be a minimum of 9 square feet with a minimum height of 6 feet.

O. **Fire Resistant Cabinet.** Fire resistant, legal size filing cabinet with locks and two (2) keys each, meeting the requirements of ANSI/UL Standard 72 for Insulated Filing Devices, Class 350-1 hour. Each office shall be provided with two (2) 2-drawer cabinets, and the required number of additional 4-drawer cabinets as specified in Table 637-2.

ITEM 637.11----25 – ENGINEER'S FIELD OFFICE – TYPE 1
ITEM 637.12----25 – ENGINEER'S FIELD OFFICE – TYPE 2
ITEM 637.13----25 – ENGINEER'S FIELD OFFICE – TYPE 3
ITEM 637.14----25 – ENGINEER'S FIELD OFFICE – TYPE 4
ITEM 637.15----25 – ENGINEER'S FIELD OFFICE – TYPE 5

P. **Bookcase.** Self-standing, 3-shelf metal or wood bookcase, approximately 4 feet high, 4 feet wide and 1 foot deep. The minimum required number of bookcases to be provided is specified in Table 637-2.

Q. **Wastebasket.** Minimum 7 gallon wastebasket, minimum one (1) per desk.

R. **Refrigerator.** Electric, top-freezer type providing a minimum storage space of 15 cubic feet for Engineer's Field Office Types 1 and 2, and a minimum storage space of 21 cubic feet for Types 3, 4 and 5.

S. **Kitchenette.** To include a minimum 1 cubic foot, 1,300 watt microwave oven, a sink with hot and cold running water with minimum dimensions of 15 inch by 15 inch by 6 inch deep, usable counter space with minimum dimensions of 5 feet long by 2 feet deep and cabinet space with minimum dimensions of 5 feet long by 1½ feet deep by 2½ feet high. If the water in the sink is not potable, it shall be clearly marked as such.

T. **Stove.** Electric, propane or bottle gas stove with a minimum of two (2) burners adequate for rapid drying of soil samples, including fuel or electrical supply. A stove is required when a separate Field Laboratory is not included.

U. **First Aid Kit.** A Type III kit in accordance with ANSI Z308.1 *Minimum Requirements for Workplace First Aid Kits*. The minimum number of first aid kits to be provided is specified in Table 637-2.

V. **Thermometer.** A minimum-maximum thermometer displaying in degrees Fahrenheit and mounted with an external probe to give the temperature both indoors and outdoors.

W. **Coat Rack.** A metal or wood coat rack or closet capable of holding at least 4 coats. The minimum required number of coat racks to be provided is specified in Table 637-2. A single coat rack may be provided as long as it holds the minimum number of coats as per Table 637-2.

X. **Office Desk and Chair.** Fully assembled freestanding office desks and chairs. Each desk shall have a 5 foot long by 2½ foot wide work surface and a height of 30 inches, at least 2 lockable drawers and include an adjustable shelf approximately 1 foot wide and no less than 2½ feet long. Each desk shall also be provided with an adjustable chair with arms, 5 legs with casters and be adjustable from approximately 16 inches to 24 inches in height. Each desk shall have a dedicated electrical outlet receptacle. The required number of office desks and chairs to be provided is specified in Table 637-2.

ITEM 637.11----25 – ENGINEER'S FIELD OFFICE – TYPE 1
ITEM 637.12----25 – ENGINEER'S FIELD OFFICE – TYPE 2
ITEM 637.13----25 – ENGINEER'S FIELD OFFICE – TYPE 3
ITEM 637.14----25 – ENGINEER'S FIELD OFFICE – TYPE 4
ITEM 637.15----25 – ENGINEER'S FIELD OFFICE – TYPE 5

TABLE 637-2 ENGINEER'S FIELD OFFICE FURNISHING REQUIREMENTS

Furnishing Description	Required Number per Engineer's Field Office Type				
	1	**2**	**3**	**4**	**5**
Restrooms	1	1	2	2	3
Parking Spaces	6	8	12	18	22
Telephone Voice Lines	2	3	4	4	5
Telephone Line for Computers (when high speed internet is unavailable)	1	1	1	1	1
Telephone Line for Facsimile	1	1	1	1	1
Fire Resistant Cabinets (4-drawer)	2	3	4	6	8
Bookcases	5	7	10	12	16
First Aid Kits	1	1	1	2	2
Coat Racks	1	2	3	4	5
Office Desks and Chairs	4	8	12	18	22
Office/Conference Tables	2	2	3	4	5
Folding Chairs	8	10	10	12	15
Drafting Tables	1	1	2	3	3
Drafting Stools	2	2	4	6	6
Vertical Plan Filing Racks	1	1	2	3	8
Roll File Units	1	1	1	2	4
Flatbed Scanner	1	1	1	1	1
Personal Computer (Hardware and Software)	2	4	6	8	8
LaserJet printer	1	2	3	3	3
Additional Software	1	1	2	2	3
Digital Camera with Motion Picture Functionality	1	1	1	2	2

Y. **Office/Conference Table.** Commercial-grade rectangular table with weather/spill resistant top a minimum of 8 feet long by 2½ feet wide by 30 inches high. The minimum required number of office/conference tables to be provided is specified in Table 637-2.

Z. **Folding Chair.** Commercial-grade, folding steel chair with approximate overall dimensions of 30 inches by 19 inches wide by 21 inches deep. The minimum required number of folding chairs to be provided is specified in Table 637-2.

AA. **Drafting Table.** Adjustable height, tilting top drafting table with brackets and legs and approximate dimensions of 6 feet long by 3 feet wide by 3 feet high. The minimum required number of drafting tables to be provided is specified in Table 637-2.

BB. **Drafting Stools.** Adjustable height stool with backrest. The minimum required number of drafting stools to be provided is specified in Table 637-2.

ITEM 637.11----25 – ENGINEER'S FIELD OFFICE – TYPE 1
ITEM 637.12----25 – ENGINEER'S FIELD OFFICE – TYPE 2
ITEM 637.13----25 – ENGINEER'S FIELD OFFICE – TYPE 3
ITEM 637.14----25 – ENGINEER'S FIELD OFFICE – TYPE 4
ITEM 637.15----25 – ENGINEER'S FIELD OFFICE – TYPE 5

CC. **Vertical Plan Filing Rack.** Constructed of metal, capable of hanging up to 12 sets of plan drawings up to 3 feet by 4 feet in size, 12 hanging clamps included. The minimum required number of vertical plan filing racks to be provided is specified in Table 637-2.

DD. **Roll File Unit.** Twelve (12) compartments, each measuring approximately 6 inches by 6 inches. The minimum required number of roll file units to be provided is specified in Table 637-2.

2.02 **Information Technology.** The minimum required number of personal computers to be provided is specified in Table 637-2. The minimum requirements for each personal computer are:

A. **Hardware**

- CPU to operate Windows 8.1 for Business (32 bit or 64 bit edition) and all other software listed in this specification;
- Optical Drive – CD-RW/DVD-RW;
- 500 GB minimum hard drive;
- 8 GB minimum RAM;
- USB Port(s);
- 24" LCD monitor (1920 x 1080 resolution minimum);
- One (1) 500 GB External Hard Drive;
- Locking cabinet(s) which encloses all computer hardware;
- Surge protection device;
- External 3 button optical scroll mouse;
- External Speakers;
- Modem with separate phone line for computer (if high speed internet service is unavailable), (minimum 56K baud rate).

B. **Software.** Substitutions for the specified software shall not be permitted unless noted otherwise. All manuals shall be provided.

- Windows 8.1 for Business (32 bit or 64 bit edition);
- Microsoft Word (2013 version or later);
- Microsoft Excel (2013 version or later);
- WINZIP 15;
- Norton Internet Security (latest version for Windows 8) set up to run in Auto-Protect Mode and Auto Update Mode (monthly), or McAfee Internet Security Suite (latest version);

  Note: Microsoft Office 2013 Standard Edition, or later version, may be used in lieu of Word 2013 and Excel 2013.

C. **Additional Software.** The following software shall also be provided on the number of personal computers specified in Table 637-2:

- Microsoft Photo Editor (latest version);
- Adobe Acrobat XI Professional (latest version);

ITEM 637.11----25 – ENGINEER'S FIELD OFFICE – TYPE 1
ITEM 637.12----25 – ENGINEER'S FIELD OFFICE – TYPE 2
ITEM 637.13----25 – ENGINEER'S FIELD OFFICE – TYPE 3
ITEM 637.14----25 – ENGINEER'S FIELD OFFICE – TYPE 4
ITEM 637.15----25 – ENGINEER'S FIELD OFFICE – TYPE 5

- Primavera scheduling software capable of meeting all scheduling requirements of the NYS Thruway Authority Addendum to the Standard Specifications §108-01 *Start and Progress of Work* and compatible with the operating system supplied under this specification.

D. Internet Communication.

- **Cable Internet Service.** 10/100 Ethernet cable network card and high-speed cable modem capable of transferring data at a minimum of 50 megabits per second;
- Subscription to an Internet Service Provider capable of providing high-speed Internet service;
- Network/Wireless – Ethernet or wireless card to be compatible with the selected internet and office network connections.

E. LaserJet Printer. Photo-quality color LaserJet printer capable of printing on 8½ by 11 inch and 8½ by 14 inch paper. Supply with spare toner cartridge, standard LaserJet and photo paper, diskettes and read/write CDs.

F. Digital Camera. The digital camera system shall meet the requirements below. All necessary hardware, cables, operating manuals, and other pertinent media required for the operation of the camera unit itself, including connecting the camera to the office computer system shall be provided. The camera must be able to download the images to a computer without any proprietary software having to be installed on a computer.

- Minimum 16.0 megapixel resolution with 20x optical zoom and autofocus operation;
- 3 inch LCD screen and optical viewfinder;
- Built-in intelligent flash (auto/on/off);
- Time/date stamp on each picture;
- A total of two (2) rechargeable sets of batteries (Lithium-Ion) and high-capacity (approximately 1 hour) charging unit;
- Two (2) SDHC highest capacity and speed (Class) memory cards that are compatible with the camera;
- Soft storage/carry case with shoulder strap;
- Motion Video: 640 x 480 resolution capability at 30 frames per second (MPEG Video).

3. CONSTRUCTION DETAILS. The Contractor shall be responsible, until use and occupancy is relinquished by the Authority, for any and all damage, direct or indirect, of whatever nature, occurring to the property of the Authority and property of the inspection staff which is kept in the Engineer's Field Office. The Engineer will provide the Contractor with a detailed list of items kept in the office, with corresponding dollar values, and will provide the Contractor with updates when something on the list changes. Non-Authority-owned property shall only be those items used in the performance of contract-related work activities. Such property shall be replaced within 30 days of the reported damages and would include any loss caused by, but not limited to, fire, theft, vandalism or malicious mischief. The Contractor shall not be responsible for items kept in the Engineer's Field Office that are not on this list.

The Contractor shall install the Engineer's Field Office sign at a location approved by the Engineer. If the Engineer's Field Office is not located within or adjacent to the contract limits, two (2) additional signs shall be displayed conspicuously within the contract limits in locations directed by the Engineer.

ITEM 637.11----25 – ENGINEER'S FIELD OFFICE – TYPE 1
ITEM 637.12----25 – ENGINEER'S FIELD OFFICE – TYPE 2
ITEM 637.13----25 – ENGINEER'S FIELD OFFICE – TYPE 3
ITEM 637.14----25 – ENGINEER'S FIELD OFFICE – TYPE 4
ITEM 637.15----25 – ENGINEER'S FIELD OFFICE – TYPE 5

The Engineer's Field Office shall be fully equipped and made available for use and occupancy by the inspection staff prior to the start of any contract work, and shall be made available after contract final acceptance as directed in writing by the Regional Construction Engineer.

All furniture and equipment shall be fully assembled, operational, clean and serviceable. The Engineer's Field Office shall be cleaned weekly or more often if required, and the timing of the cleaning operations shall be coordinated with the Engineer. The Contractor shall remove and dispose of all rubbish generated in the office and shall keep the office free from pests. The Contractor shall remove snow from all areas subject to vehicular circulation and parking.

After completion, all portable buildings or trailers, fencing, surfacing and utilities shall be removed from the location and the areas cleaned, loamed and restored as required. The Contractor shall be responsible for providing all necessary computer hardware, software and peripheral devices as well as high-speed Internet service to the Engineer's Field Office until use and occupancy of the Engineer's Field Office is relinquished by the Authority. Only internet services that can provide a minimum data transfer rate of 768 kilobits per second will be considered acceptable. The Contractor shall be responsible for providing all necessary service connections to the Engineer's Field Office and Engineer's Field Office computer(s). In addition, the Contractor shall provide a cable or DSL modem and any other equipment necessary to provide the minimum specified data transfer rate.

4. **METHOD OF MEASUREMENT.** The Engineer's Field Office will be measured for payment as the number of months satisfactorily provided, measured to the nearest 0.25 months.

5. **BASIS OF PAYMENT.** The unit price bid per month for the Engineer's Field Office shall include the cost of all labor, materials and equipment necessary to complete the work including property rental, utility charges and incidental expenses. Payment will be made for each month of availability for occupancy by the Engineer and inspection field staff.

   No payment will be made under Engineer's Field Office when deficiencies in compliance with these requirements are not promptly addressed by the Contractor after notification by the Engineer. Should the aggregate of non-compliance days exceed 3 days in any one month, no payment shall be made for the entire month in which deficiencies were cited.

   Monthly payments may be terminated prior to contract final acceptance by written notification by the Division Construction Engineer that such office will no longer be required on the contract. Payment for each month's occupancy of the Engineer's Field Office after the date of contract final acceptance will be made as part of the final contract payment. Failure of the Contractor to supply documentation required to complete the final estimate may result in nonpayment during this delaying period.

   During periods of contract extension of time where Engineering Charges are assessed, no payment will be made for occupancy and services, except that payment for each month's occupancy after the date of final acceptance will be made as part of the final estimate.

ITEM 645.51000125 – INSTALL GROUND-MOUNTED SIGN PANELS (AUTHORITY SUPPLIED)
ITEM 645.61000125 – INSTALL OVERHEAD SIGN PANELS (AUTHORITY SUPPLIED)

1. DESCRIPTION:

1.01 This work shall consist of installing sign panels fabricated and supplied by the Authority in accordance with the contract documents, standard sheets, MUTCD and as directed by the Engineer.

1.02 All provisions of Section 645-1.01 *Definitions* shall apply.

2. MATERIALS:

2.01 All provisions of Section 645-2 shall apply except that all sign panels will be fabricated and supplied by the Authority. The Contractor shall provide all Z-bars, mounting brackets, fasteners and miscellaneous hardware required for installation.

3. CONSTRUCTION DETAILS:

3.01 All provisions of Section 645-3 shall apply.

3.02 The Contractor shall provide the Engineer a sign fabrication request and sign installation schedule upon award of contract. The Engineer shall submit the request and schedule to the Authority's Bureau of Highway Management. The Contractor shall coordinate the delivery of the finished sign panels with the Authority to reduce, or eliminate, on-site storage time at the Thruway Sign Shop. The Authority will deliver the finished sign panels to the Maintenance Section nearest the work site or to another location agreed upon by the Contractor and the Authority. The Contractor shall be responsible for transporting the signs from the delivery location to the work site. The Contractor shall inspect the condition of the signs and notify the Authority of any defects prior to taking delivery.

4. METHOD OF MEASUREMENT:

4.01 The work will be measured as the number of square feet measured to the nearest 0.1 square foot of sign panel satisfactorily installed.

4.02 The area of each panel will be measured as the area shown on the standard sheets. For sign panels not shown on the standard sheets, the area will be measured as the product of length and width, with no reduction for rounded corners. When sign panels are mounted back-to-back, each panel face will be measured separately.

5. BASIS OF PAYMENT:

5.01 The unit price bid shall include the cost of furnishing all labor, materials, and equipment necessary to complete the work.

ITEM 646.0603--25 - INSTALL DELINEATOR OR TENTH MILE MARKER ON POST
ITEM 646.0604--25 - INSTALL DELINEATOR OR TENTH MILE MARKER, BACK-TO-BACK ON POST
ITEM 646.0610--25 - INSTALL DELINEATOR OR TENTH MILE MARKER, BAND OR BRACKET MOUNTED
ITEM 646.0612--25 - INSTALL DELINEATOR OR TENTH MILE MARKER, BACK-TO-BACK, BAND OR BRACKET MOUNTED
ITEM 646.0801--25 - INSTALL SNOWPLOW MARKER, SINGLE UNIT
ITEM 646.0802--25 - INSTALL SNOWPLOW MARKER, DOUBLE UNIT

1. DESCRIPTION:

1.01 The work shall consist of furnishing and installing delineator and/or snowplow marker posts, bands, brackets and all necessary hardware for mounting delineators or snowplow markers as shown on the plans.

2. MATERIALS:

2.01 The posts shall conform to the requirements of Section 646-2 of the Standard Specifications and as shown on the plans.

3. CONSTRUCTION DETAILS:

3.01 The Contractor shall install the delineators or snowplow markers in accordance with Section 646-3 of the Standard Specifications and as shown on the plans.

4. METHOD OF MEASUREMENT:

4.01 The work shall be measured as the number of complete delineators or snowplow markers installed.

5. BASIS OF PAYMENT:

5.01 The unit price bid for each delineator or snowplow marker shall include the cost of all equipment, labor and materials including posts, bands, brackets and hardware necessary to satisfactorily mount and install the delineator or snowplow marker. Also included is the cost to pick up the delineator or snowplow marker panels from the Authority.

ITEM 646.50----25 REMOVE AND DISPOSE OF DELINEATORS OR MARKERS

1. DESCRIPTION:

1.01 The work shall consist of removal and disposal of all Delineators, full Mile Markers, 1/10 Mile Markers and Snowplow Markers including the posts in a manner satisfactory to the Engineer.

2. MATERIALS:

2.01 Not Specified

3. CONSTRUCTION DETAILS:

3.01 The Contractor shall remove the Delineators and/or Mile Markers with respective posts and dispose of them in a manner satisfactory to the Engineer.

4. METHOD OF MEASUREMENT:

4.01 The removal and disposal shall be measured on an each basis.

5. BASIS OF PAYMENT:

5.01 The unit price bid for removal and disposal of each Delineator and Mile Marker shall include the cost of furnishing all labor and equipment necessary to remove, transport and dispose of the material.

ITEM 649.2504--25 - SHOULDER TREATMENT FOR ACCIDENT REDUCTION (STAR) (ASPHALT)

1. DESCRIPTION:

1.01 This work shall consist of the installation of a pattern of STAR grooves cut into the asphalt shoulder in accordance with these specifications and at the locations shown in the Contract Documents or directed by the Engineer.

2. MATERIALS:

2.01 None.

3. CONSTRUCTION DETAILS:

3.01 Construct the pattern of grooves to the dimensions, spacing and locations shown on the drawings, or as directed by the Engineer. The method of cutting shall be either milling or grinding. The cutting head shall be capable of producing a 16 inches wide cut in one pass. If the milling method is used, the outer drum diameter shall be a maximum of 24 inches with a minimum of 50 carbide cutting tips. The rotation speed of the drum shall be a minimum of 600 feet per minute.

3.02 Alignment of the edge of the pattern shall be verified and checked by the Engineer. Acceptable deviations from a longitudinal reference line shall be no more than 3 inches. The Contractor shall create a test strip of sufficient length to satisfy the Engineer that the pattern, dimensions, alignment and texture are acceptable. Seven (7) days prior to the test, the Contractor shall inform the Engineer in writing of the proposed location of the test site. The location shall be within the project limits or close proximity to the project and approved by the Engineer. The testing shall not be conducted on finished pavement or interim pavement that will be subjected to traffic. After acceptance of the test installation, the test site shall be restored A.O.B.E.

The cutting head shall be on its own suspension system, independent from that of the power unit, to allow the head to align itself with the slope of the shoulder and/or irregularities in the shoulder surface. The cutting tool shall be equipped with guides or a guidance system, clearly visible to the operator, to provide for consistent alignment of each STAR groove at the offsets from traveled way indicated in the Contract Documents.

The finished STAR grooves shall have a nominal length measured in the direction of travel of 7 inches and a nominal width measured perpendicular to the direction of travel of 16 inches. The depressions shall have a uniform circular concave cross-section with a nominal depth of 1/2 inch and a maximum allowable depth of 5/8 inch. The STAR grooves shall be spaced at intervals of 1 foot as indicated in the Contract Documents or as directed by the Engineer.

3.03 Where work is required at a location that abuts an already grooved area, the Contractor shall adjust the alignment of new grooves to blend with that of the existing grooves.

3.04 The Contractor shall remove and dispose of millings and/or grinding slurry. The shoulder area shall be returned to a debris-free state prior to re-opening for traffic.

4. METHOD OF MEASUREMENT:

4.01 The quantity measured for payment will be the number of linear feet of shoulder grooved in accordance with the Contract Documents or as directed by the Engineer. Measurements will be taken parallel to the edge of pavement for the entire length of shoulder satisfactorily grooved.

ITEM 649.2504--25 - SHOULDER TREATMENT FOR ACCIDENT REDUCTION (STAR) (ASPHALT)

5. BASIS OF PAYMENT:

5.01 The unit price bid per linear foot shall include all labor and equipment necessary to accomplish the work. No separate payment shall be made for the removal and disposal of millings or grindings. No payment shall be made for the test strip.

ITEM 685.17XX--25 - HIGHLY REFLECTORIZED TRIPLE DROP EPOXY PAVEMENT STRIPES, 6 INCH WIDTH

1. DESCRIPTION:

1.01 Under this work, the Contractor shall furnish and apply highly reflectorized epoxy pavement markings in accordance with the contract documents or as ordered by the Engineer, and in conformance with the MUTCD and these specifications.

The epoxy marking material shall be hot-applied by spray methods onto bituminous or portland cement concrete pavement surfaces at a 6-inch width and a 20- or 25-mil wet thickness as indicated in the contract documents. The cured epoxy marking shall be an adherent, highly reflectorized stripe.

2. MATERIALS:

2.01 All provisions of Section 727-03 *Epoxy Paint* shall apply.

2.02 Beads shall be a triple drop system of microcrystalline ceramic beads and glass spheres consisting of Standard Glass Beads (Type 2) and Wet/Night Visibility Beads (Type 1) as defined in Section 727-05 *Glass Beads for Pavement Markings*.

2.03 White ceramic beads for white stripes shall be 3M Series A W Wet Elements Wet E, or approved equal. Yellow ceramic beads for yellow stripes shall be 3M Series A W Wet Elements Wet E, or approved equal. The ceramic beads shall have a minimum refractive index (R.I.) of 2.40 when tested using the liquid oil immersion method.

2.04 Standard Glass Beads (Type 2) shall be Visibead Plus, or approved equal.

3. CONSTRUCTION DETAILS:

3.01 All provisions of Standard Specification §685-3 shall apply.

3.02 Beads shall be applied as follows:

A. **6 inch by 20 mil applications.** The first drop shall be microcrystalline ceramic beads at a rate of 7 pounds per gallon; the second drop shall be Wet/Night Visibility Beads (Type 1) at a rate of 7 pounds per gallon; and the third drop shall be Standard Glass Beads (Type 2) at a rate of 10 pounds per gallon.

B. **6 inch by 25 mil applications.** The first drop shall be microcrystalline ceramic beads at a rate of 5 pounds per gallon; the second drop shall be Wet/Night Visibility Beads (Type 2) at a rate of 5 pounds per gallon; and the third drop shall be Standard Glass Beads (Type 1) at a rate of 8 pounds per gallon.

4. METHOD OF MEASUREMENT:

4.01 Pavement striping will be measured in feet along the centerline of the pavement stripe and will be based on a 6-inch wide stripe. Measurement for striping with a plan width greater or lesser than the 6 inches as shown on the plans or directed by the Engineer, will be made by the following method:

$$\frac{\textit{Plan Width of Striping (inches)} \times \textit{Feet}}{\textit{6 inches}}$$

ITEM 685.17XX--25 - HIGHLY REFLECTORIZED TRIPLE DROP EPOXY PAVEMENT STRIPES, 6 INCH WIDTH

5. BASIS OF PAYMENT:

5.01 All provisions of Standard Specification §685-5 shall apply.

Payment will be made under:

Item Number	Item	Pay Unit
685.1707--25	**White Highly Reflectorized Triple Drop Epoxy Pavement Stripes – 6 in x 20 mils**	**LF**
685.1708--25	**Yellow Highly Reflectorized Triple Drop Epoxy Pavement Stripes – 6 in x 20 mils**	**LF**
685.1709--25	**White Highly Reflectorized Triple Drop Epoxy Pavement Stripes – 6 in x 25 mils**	**LF**
685.1710--25	**Yellow Highly Reflectorized Triple Drop Epoxy Pavement Stripes – 6 in x 25 mils**	**LF**

ITEM 697.0203--25 - FIELD CHANGE ORDER (THRUWAY)

1.0 DESCRIPTION

1.1 General. The Field Change Order (FCO) provides a contract contingency allowance for the timely payment of authorized additional work that is necessary to fulfill the intent of the plans and specifications.

1.2 Eligible Work. FCO payments shall be limited to work that is: (1) within the scope of the contract; (2) a quantity variation of existing contract pay items, or; (3) a new contract pay item introduced as a result of minor field adjustments in the details of the project. All eligible items of work shall have a known unit price, either through use of a contract bid price or through an Agreed Price.

2.0 MATERIALS. None specified.

3.0 CONSTRUCTION DETAILS. None specified.

4.0 METHOD OF MEASUREMENT

4.1 This item will be measured for payment on a dollars-cents pay unit basis.

4.2 Bid Price. The unit price shown in the proposal for this item will be considered as the price bid, and shall not be altered in any manner. Should the amount shown be altered, the new figure will be disregarded and the original bid price will be used to determine the total amount bid for the contract.

4.3 Payments. Work for which FCO payments are processed will be measured in accordance with the specifications governing the work.

5.0 BASIS OF PAYMENT

5.1 All work to be paid under the FCO item must be authorized in conformance with §104-02 – *Changes, Contingencies, Extra Work and Deductions*. Disputed work, force account work, work associated with §104-10 – *Value Engineering Change Proposals*, or payments for time related provisions are not eligible for FCO payment.

5.2 FCO payments will be determined from the quantities and unit prices of eligible work that has been completed in conformance with applicable Specifications. Work for which FCO payments are processed will be paid in accordance with the specifications governing the work.

5.3 Prior to processing the final agreement, the FCO payments will be reconciled through a final Order-on-Contract, such that the amount of FCO payments are converted to the corresponding quantities of the pertinent contract pay items. When payments are transferred to the appropriate items, the remaining amount of FCO funds will be deleted.

ITEM 699.04----25 - MOBILIZATION

1. DESCRIPTION:

1.01 Under this item the work the Contractor shall be generally compensated for expenses which are incurred before significant contract work occurs. The three (3) milestones identified by the NYSTA for successful Contractor completion of mobilization to begin this public works contract are:

a. **Start of Work:**

Provide the necessary bonds, insurance, and prefinancing.

Set up the necessary general plant, including shops, storage areas, offices for itself and the Owner's Engineer and such sanitary and other facilities as are required by local or state law or regulation, and staff the project with equipment.

b. **Schedule of Operations:**

Submit, and if necessary, revise and resubmit, a complete "Critical Path format Schedule of Operations" as described in §108-01, of the TA Addendum.

c. **Minority and Women's Business Enterprise Participation Program:**

Provide a M/WBE participation program meeting the M/WBE goals of the Contract as described in **§109-06 CONTRACT PAYMENTS** and in accordance with **§102-12 D/M/WBE UTILIZATION**.

2. MATERIALS:

2.01 Unless otherwise specified, materials required for mobilization, but not installed as part of the completed contract, shall be as determined by the Contractor, except they shall conform to any pertinent local, State or Federal laws, regulations or codes.

3. CONSTRUCTION DETAILS:

3.01 The work required to provide the above facilities, services, and equipment for mobilization shall be done in a safe and workmanlike manner and shall conform with any pertinent local, State or Federal Law, regulation or code. Good housekeeping consistent with safety and other requirements of this contract shall be maintained.

4. METHOD OF MEASUREMENT:

4.01 Payment for mobilization will be made on a lump sum basis in the next estimate after the acceptable completion of all three (3) mobilization milestones, as documented by the Engineer:

a. Milestone 1 is submission of required bonds, insurance, and refinancing.
b. Milestone 2 is acceptance of a CPM Schedule of Operations for the project in accordance with §108-01 of the TA Addendum.

ITEM 699.04----25 - MOBILIZATION

4. METHOD OF MEASUREMENT: (cont'd)

4.01 (cont'd)

c. Milestone 3 is acceptance of the Contractor's program to comply with the M/WBE goals of the Contract in accordance with **§102-12 D/M/WBE UTILIZATION**.

5. BASIS OF PAYMENT:

5.01 The amount bid for mobilization shall not exceed four percent (4%) of the total contract bid price, excluding the bid price for mobilization.

The amount bid shall constitute only general compensation for the furnishing and maintenance of the services and facilities delineated in Section 1. Description, to the extent and at the time the Contractor deems them necessary for his operations, consistent with the requirements of this work and the contract.

The amount bid shall be payable to the Contractor with the first progress estimate made for other contract work following acceptable completion of all three (3) milestones defining completion of the work of this Item. The first progress estimate shall be made after the value of contract work, excluding the value of this item, meets the requirements set forth in **§109-06 – Contract Payments**.

Payment will be made under:

ITEM NO.		DESCRIPTION	PAY UNIT
699.04	25	Mobilization	Lump Sum

SPECIAL NOTES

CONFIDENTIAL INFORMATION

1. **Confidential Information:** "Confidential Information" means any information not generally known to the public, whether oral or written, that the Authority claims is confidential and discloses to Contractor for the purposes of performing work on the Project. Confidential Information may include, but is not limited to, operational and infrastructure information relating to: bid documents, plans, drawings, specifications, reports, product information and data, business and security processes and procedures; personnel and organizational data, and financial statements; information system IP addresses, passwords, security controls, architectures and designs; and such other data, information and images that the authority deems confidential. The Authority will identify written Confidential Information by marking it with the word "Confidential" and will identify oral Confidential Information as confidential at the time of disclosure to the Contractor.

2. **Exempt Materials:** Confidential Information does not include information which, at the time of the Authority disclosure to Contractor; (a) is already in the public domain or becomes publicly known through no act of Contractor; (b) is already known by Contractor free of any confidentiality obligations; (c) is information that the Authority has approved in writing for disclosure; or (d) is required to be disclosed by Contractor pursuant to law so long as Contractor provides the Authority with notice of such disclosure requirement and an opportunity to defend prior to any such disclosure.

3. **Permitted Use:** Contractor may use Confidential Information solely for the purposes of performing work on the Project. Contractor may share Confidential Information with its employees, consultants, sub-consultants, sub-contractors, suppliers, and agents that are necessary to perform work on the Project ("Authorized Personnel"), but must ensure that such Authorized Personnel execute a Confidentiality and Non-Disclosure Agreement as set forth in the Minimum requirements for the Handling and Treatment of Confidential Information. The Authority's disclosure of Confidential Information to Contractor shall not convey to Contractor any right to or interest in such Confidential Information and the Authority shall retain all right and title to such Confidential Information at all times.

4. **Protections:** Contractor shall hold Confidential Information confidential to the maximum extent permitted by law. Contractor shall safeguard Confidential Information in accordance with the Minimum Requirements for the Handling and Treatment of Confidential Information.

5. **Return of Confidential Information:** Upon the written request of the Authority, Contractor shall return all written Confidential Information to the Authority.

EXTERNAL CONNECTIONS

If in order to perform work on the Project, Contractor must make an external connection to the Authority's data communications infrastructure and/or access Authority information systems, Contractor shall in all respects comply with all Authority policies and procedures regarding such connections and information systems access and undertake whatever actions are necessary in the discretion of the Authority to ensure such compliance. Contractor shall be responsible for all costs associated with ensuring that its own network security measures comply with all Authority policies and procedures regarding external connections.

MINIMUM REQUIREMENTS FOR THE HANDLING AND TREATMENT OF CONFIDENTIAL INFORMATION

Contractor shall meet the following minimum requirements relative to project information that is identified as **CONFIDENTIAL.**

Authorized Personnel:

Contractor shall require that all authorized individuals or entities (e.g., employees, consultants, sub-consultants, sub-contractors, suppliers and agents) ("Authorized Personnel") to which it discloses **CONFIDENTIAL** information sign a Confidentiality and Nondisclosure Agreement ("Agreement"). Such Agreement shall provide that Authorized Personnel: are personally responsible at all times for protecting **CONFIDENTIAL** information that is in their possession or control; must always use proper precautions to safeguard against the unauthorized access and disclosure of **CONFIDENTIAL** information; must notify Contractor of any known or suspected instances of loss or theft of, or unauthorized access to, **CONFIDENTIAL** information; and must return all **CONFIDENTIAL** information to Contractor upon completion of the project. Contractor shall be responsible for enforcing the provisions of such Agreement through personal observation and supervision of Authorized Personnel and utilization of appropriate processes.

Contractor shall maintain a list of all Authorized Personnel which have access to **CONFIDENTIAL** information and must provide the Authority with such list upon the Authority's request. Contractor shall update such list monthly and notify the Authority of any changes in such list.

Inventory Control:

Contractor shall create and maintain an inventory of all **CONFIDENTIAL** information that it provides to Authorized Personnel. Upon completion of the project, Contractor shall check all **CONFIDENTIAL** information returned from Authorized Personnel against the inventory. Contractor shall provide a copy of the checked inventory to the Authority.

Use and Storage:

Contractor shall implement reasonable processes during normal working hours to prohibit unauthorized individuals from gaining access to **CONFIDENTIAL** information that is within the Contractor's custody and control. At times other than normal working hours, Contractor shall store **CONFIDENTIAL** information in a secure area, such as a fire-proof safe, locked desk, cabinet or other secure storage facility, where access can be controlled. Contractor shall control the access that Authorized Personnel have to **CONFIDENTIAL** information stored in such secure areas through the use of manual or automated locks and keys. Contractor shall maintain a list of Authorized Personnel who have access to such secure areas and the specific **CONFIDENTIAL** information therein.

Reproduction:

Contractor may reproduce **CONFIDENTIAL** information only to the extent necessary to carry out contract performance. Contractor must stamp/mark all **CONFIDENTIAL** information that is reproduced with the word **CONFIDENTIAL** and protect it in the same manner as the original.

Transportation:

To the extent feasible and reasonable, Contractor shall hand deliver **CONFIDENTIAL** information with instructions that only the addressee is allowed to open or view it. Contractor may send **CONFIDENTIAL** information that cannot be hand delivered via the U.S. Postal Service or express mail services (e.g., FEDEX) provided: it is packaged and sealed in a way that does not disclose its contents or the fact that it is **CONFIDENTIAL** information, and a signature from the recipient is required.

Under no circumstances shall a transportation method be used that cannot guarantee that **CONFIDENTIAL** information is accessed only by the intended recipient.

Disposal:

Contractor shall dispose of all **CONFIDENTIAL** information, regardless of its form or format, using a destruction method that prevents its unauthorized retrieval (e.g., crosscut or micro shredding, degaussing).

Loss, Theft or Unauthorized Access:

Contractor shall provide timely notice to the Authority upon discovery of any incident involving the loss or theft of, or unauthorized access to, **CONFIDENTIAL** information.

SPECIAL NOTE:
CONTROL OF MATERIALS

The Contractor's attention is directed to the TA Addendum, Section 106 – CONTROL OF MATERIAL, located elsewhere in this Proposal. The Contractor understands and agrees that some or all of the off-site inspection and approval of material such as precast concrete items, structural steel, bridge bearings, concrete structural elements and/or their components to be used on this project will be done by the New York State Department of Transportation (NYSDOT) as the Authority's agent.

The Contractor agrees to the following conditions:

1. Whenever the Contractor receives direction from the NYSDOT regarding the approval/rejection of material that direction constitutes direction by the Authority under the contract, and shall be final and accepted as such by the Contractor.

2. The Contractor will not allow off-site materials subject to inspection and approval of NYSDOT to be shipped to the project site without direct authorization from the NYSDOT.

3. At the Pre-Award Meeting or as soon as practicable, but in any case before the Pre-Construction Conference, the Contractor will provide the following information to the Thruway Authority's Director, Office of Construction Management, for transmittal to NYSDOT to arrange off-site inspections:

   A. The name and address of each Manufacturer of all materials, and portions thereof, requiring off-site quality assurance to be incorporated into this highway project.

   B. The name and address of each Fabricator fabricating each steel item or any portion thereof to be incorporated into this highway project.

   C. The name and address of each Fabricator manufacturing structural pre-cast/pre-stressed items or any portion thereof to be incorporated into this highway project.

4. The Contractor agrees that it and its Subcontractors and Suppliers will acquire all materials to be incorporated into this Thruway/Canal project **only** through Manufacturing, Batching and Fabrication facilities approved by NYSDOT.

AVAILABILITY OF ELECTRONIC BID DATA

1. SUMMARY:

The New York State Thruway Authority (NYSTA) uses Trns•port Expedite Software for electronic bidding. Expedite is a product of the American Association of State Highway and Transportation Officials (AASHTO) that is currently used by the majority of State Departments of Transportation. It is provided free of charge, and can be used on almost any Windows-compatible PC. It integrates with many existing electronic bid preparation software, and has import/export capability for use with database and spreadsheet systems. Expedite allows bidders to receive electronic proposal bid item information from the New York State Thruway Authority (NYSTA) internet web site and to produce both an electronic and a paper-based bid.

For additional information and downloads, see the NYSTA website at:
http://www.nysthruway.gov/business/contractors/expedite/index.html.

2. PARTICIPATION AND RELATIONSHIP TO PAPER DOCUMENTS:

Electronic bidding neither replaces paper bids nor forces any Contractor to bid electronically. Rather, participation is voluntary and **electronic bidders must submit paper documents that match the electronic file**. Expedite prints a check code on every bid page that must match the check code in the computer file. As the check code changes every time the electronic file is modified, matching the codes verifies that the data on the printed bid is the same as in the electronic file. **In case of discrepancy, paper bids always prevail and are the primary legal document.**

3. THIRD-PARTY SOFTWARE:

The NYSTA endorses no particular product but expects all such vendors and individuals to voluntarily keep pace with changes in NYSTA specifications.

4. PROPOSAL NOTES AND CHANGES BY AMENDMENT:

Contractors are solely responsible for recognizing and properly responding to any and all special notes and circumstances printed in the Contract Proposal and any and all changes by amendment from the amendment documents and/or notices communicated to them by the NYSTA Contracts Unit. Amendments are posted online at: http://www.thruway.ny.gov/business/contractors/documents/index.shtml. If an amendment involves changes to item bid date, an amended Expedite file will be posted to the NYSTA website, and this file must be applied to your electronic bid. However, not all amendments will involve changes to item bid data. Do not bid without carefully reviewing the printed proposal and any and all changes by amendment. Proposal notes and circumstances include, but are not limited to, printed information on alternate, fixed and/or limited cost items and/or special circumstances regarding item placement and use.

SPECIAL NOTE:

REQUIREMENTS FOR CONTRACTOR'S UTILIZATION OF AREAS OUTSIDE OF THE RIGHT-OF-WAY

1. Before the contractor can utilize any area outside of the NYS Thruway Authority or NYS Canal Corporation (NYSTA/CC) Right of Way (or outside of a temporary easement obtained for the project by the NYSTA/CC), for any work associated with this project, written approval to do so shall be obtained from the NYS Thruway Authority through the Project Engineer. The contractor's request for approval shall be in writing and the Authority shall be allowed 2 weeks to review the request and respond.

2. This requirement applies to areas such as, but not limited to: borrow areas, spoil areas, equipment and/or material storage areas, haul roads, batching areas, water points, shop areas, and all similar areas. This requirement does not apply to the Contractor's established and permanent headquarters, commercial borrow sources, commercial gravel pits, commercial quarries, and all similar areas.

3. The contractor's written request for approval shall include a letter report prepared by an Environmental Professional, acceptable to the Authority, documenting the investigation of the proposed site. The expectation is that an Environmental Professional visits the site, performs an assessment of the proposed use against all applicable environmental requirements, and then documents their findings and recommendations. The letter report shall include the following unless otherwise authorized by the Authority:

   a) A written description of the activities the contractor wishes to perform at the proposed site, including timeframes.

   b) Maps showing Federal and State regulated wetlands. The area proposed for use shall be depicted on each map.

   c) A site location map which accurately shows the area proposed for use, adjacent property boundaries/owners, the location of all wetland boundaries observed, and any required erosion and sediment control measures. If present, wetlands shall be delineated in the field by the Environmental Professional with stakes and ribbon, and wetland delineation data forms shall be completed.

   d) A written statement prepared by the Environmental Professional regarding the presence of any rare animals or plants or significant natural communities. The Environmental Professional shall use the NYSDEC Environmental Resource Mapper to make this determination. If any rare species are identified, then determine if the rare species are listed as endangered or threatened and whether the NYSDEC determines the proposed use may be harmful to the species or their habitat. If so, address to the satisfaction of the NYSDEC.

   e) A copy of the applicable SPDES permit and any local municipal permits related to use of the site.

   f) A listing of other Environmental Permits which were obtained by the Authority for the project. These are referenced in the contract proposal.

   g) A completed NYSTA Property Release form. The form is available through the Project Engineer.

   h) A plan showing all restoration work. This includes, but is not limited to, plans for grading, surface restoration details, and erosion and sediment control.

4. This requirement does not waive other provisions of the contract related to use of lands outside the Right of Way. Rather, it shall be viewed as supplementary. The following contract provisions still remain in effect:

   §107-08 Protection and Restoration of Property and Landscape, Subsection B. Outside the Right of Way
   §107-10 Managing Surplus Material and Waste

COMPLIANCE WITH SPDES REGULATIONS

The Contractor is advised that the NYS Thruway Authority has evaluated Stormwater requirements for this project and has determined that coverage is not warranted under NYS Department of Environmental Conservation's SPDES General Permit for Stormwater Discharges from Construction Activity (GP-0-15-002). The Contractor shall read and understand the requirements of GP-0-15-002. In the event the Contractor's operations, e.g., clearing and grubbing, expanded staging area; will cause an increase in ground disturbance beyond the amount identified in the Contract Documents, coverage under GP-0-15-002 may be required. Prior to commencing these operations, the Contractor should immediately advise the Project Engineer, who will in turn discuss the request with the Project Designer and Division Environmental Specialist or Environmental Point of Contact.

- In the event coverage is required under GP-0-15-002 as a result of these operations, the Contractor will be required to prepare a Stormwater Pollution Prevention Plan (SWPPP) and submit a Notice of Intent (NOI) with the NYS Department of Environmental Conservation.

- In the event coverage is required under GP-0-15-002 as a result of changes made by the Authority/Corporation, the Authority/Corporation will be required to prepare a SWPPP and submit a NOI.

In either case, the Contractor will not be allowed to proceed until verification of coverage under GP-0-15-002 has been provided to the Project Engineer. The Contractor shall make no claim against the Authority/Corporation for delays resulting from preparing a SWPPP, filing a NOI, and seeking verification of permit coverage.

STATE POLLUTANT DISCHARGE ELIMINATION SYSTEM (SPDES) GENERAL PERMIT

The New York State Thruway Authority/New York State Canal Corporation has filed with the NYSDEC a Notice of Intent (NOI) for storm water discharge associated with construction activity to be performed for this project under the General Permit for Stormwater Discharges (GP-0-15-002).

A site specific Stormwater Pollution Prevention Plan (SWPPP) as required by the GP-0-15-002 has been prepared for this site. The SWPPP is part of the contract documents for the project which reflects the runoff characteristics of the project site and employs stormwater management practices that minimize the mobilization of pollutants during runoff events. The Contractor shall read, understand and follow the requirements of the site specific SWPPP and GP-0-15-002. The SWPPP for this site has been certified by the Thruway Authority/Canal Corporation, therefore, any proposed changes or modifications to the SWPPP deemed necessary due to changes in field conditions shall be reviewed and approved by the Authority/Corporation's Qualified Professional in accordance with GP-0-15-002. The Contractor and all subcontractors will be required to sign the "Contractor/Subcontractor SPDES Permit Certification" CONR5 form pertaining to compliance with the SPDES Stormwater General Permit. Each Contractor/Subcontractor shall designate a trained individual who meets the requirements in GP-0-15-002 for the "trained contractor" for the duration of the project. A copy of the new General Permit (GP-0-15-002) is available at http://www.dec.ny.gov/chemical/43133.html

SPECIAL NOTE

DIESEL EMISSION REDUCTION ACT (DERA) REGULATORY COMPLIANCE

All Authority/Corporation Contractors are made aware that Environmental Conservation Law (ECL) 19-0323 and the New York State Department of Environmental Conservation (NYSDEC) regulation 6 NYCRR Part 248 *Use of Ultra Low Sulfur Diesel (ULSD) Fuel and Best Available Retrofit Technology (BART) for Heavy Duty Vehicles* requires retrofit of all regulated heavy duty diesel vehicles working on all State awarded contracts. Current statute sets December 31, 2015 as the date when all regulated vehicles must be retrofitted with BART. A link to NYSDEC's enforcement discretion which states the current deadline is located at: http://www.dec.ny.gov/chemical/74288.html. The New York State Thruway Authority/Canal Corporation (NYSTA/CC) and its Contractors are responsible for annual reporting.

All Authority/Corporation Contractors shall make determinations of regulatory applicability for vehicles in their inventory used on active Authority/Corporation contracts during each calendar year. These determinations shall be based on the definition of Heavy Duty Vehicle (HDV) including on and off road diesel vehicles having gross vehicle weights in excess of 8,500 pounds, excluding vehicles that are exempt as defined in 6 NYCRR 248-1.1(b)(14). Contractors shall also quantify ULSD fuel used by regulated vehicles in active contract work during the calendar year.

An electronic copy of 6 NYCRR Part 248 can be accessed at http://www.dec.ny.gov/regs/2492.html. Electronic copies of the Regulated Entity Vehicle Inventory Form and the Regulated Entity and Contractors Annual Report Form can be accessed under Part 248 – Use of Ultra Low Sulfur Diesel Fuel and Best Available Retrofit Technology for Heavy Duty Vehicles at the following link: www.dec.ny.gov/chemical/4754.html.

To allow for required reports to be submitted to NYSDEC by the regulatory deadline of November 1, each year, DERA annual reporting by Authority/Corporation Contractors shall be submitted to NYSTA/CC by October 1, of every year reporting the required information from the previous calendar year (i.e., all 2014 information to NYSTA/CC by October 1, 2015, etc.).

Electronic mail submissions can be sent to dieselreport@thruway.ny.gov

SPECIAL NOTES

GREEN CONSTRUCTION REQUIREMENTS

ULTRA LOW SULFUR DIESEL FUEL

In order to reduce diesel emissions, the Contractor shall use Ultra Low Sulfur Diesel (ULSD) fuel to operate all diesel engines used to complete the work that will operate for 10 hours or more on the contract site. ULSD fuel requirements shall apply to:

- All diesel engines/equipment.
- Stationary and mobile equipment.
- Owned, leased and rented equipment.

The hours the piece of equipment is used to complete the work is defined as the actual time the engine is running. The time may be continuous or discontinuous and includes warm-up periods idling, in traffic periods, etc.

The Contractor shall repair deficiencies when any diesel powered construction equipment is in non-compliance. When non-compliance items are identified by NYSTA/CC, the Contractor will be notified for correction within a 24-hour period.

SPECIAL NOTES

GREEN CONSTRUCTION REQUIREMENTS

CONTROLLING EXPOSURE TO DIESEL EXHAUST

The Contractor shall exercise measures to protect "Sensitive Receptors" from the impacts of diesel exhaust fumes. Sensitive Receptors include, but are not limited to: hospitals, schools, daycare facilities, building fresh air or ventilation intakes, elderly housing or convalescent facilities. The Contractor shall ensure that diesel powered engines are located away from building air conditioners and windows.

The goal is to minimize exposure of Sensitive Receptors in close proximity to diesel exhaust, in terms of both concentration and time. In general, close proximity is defined as within 15 meters of a Sensitive Receptor. Mitigation techniques include positioning stationary equipment exhausts greater than 15 meters from Sensitive Receptors, extension of equipment exhausts through the use of flexible tubing; protecting building air intakes; and the use of moving operations.

Idling time for diesel powered equipment shall be limited to three consecutive minutes for delivery and dump trucks and all other diesel powered equipment except as follows:

- When a "mobile source" (vehicle) is forced to remain motionless because of traffic conditions or mechanical difficulties over which the operator has no control.
- When it is necessary to operate a loading, unloading or processing device.
- When the outdoor temperature is less than - 3°C (27°F).
- When the "mobile source" is being repaired.

Arrow panels and portable variable message signs shall be solar powered wherever possible or practical.

Whenever possible and practicable, the Contractor shall establish staging areas for diesel powered vehicles waiting to load or unload materials at the work site. Such areas shall be located where diesel emissions have the least impact on Sensitive Receptors and the general public.

SPECIAL NOTES

GREEN CONSTRUCTION REQUIREMENTS

DUST CONTROL

The Contractor shall minimize dust from disturbed soil surfaces or other materials that can cause off-site damage, health hazards and traffic safety problems. Dusty conditions resulting from the Contractor's operations shall be corrected at no additional cost to the State. Buffer areas of vegetation should be left where practical. Water quality shall be considered when selecting materials for dust control. An approved dust palliative may be used in conformance with applicable conditions placed on its use. A list of acceptable dust palliatives is available at: www.nysdot.gov/divisions/engineering/technical-services/geotechnical-engineering-bureau/dust-palliatives .

For areas not subject to traffic, products and materials may be applied or placed on soil surfaces to prevent airborne migration of soil particles, including:

- Vegetative Cover –provides the most practical method of dust control.
- Mulch (including rolled erosion control products) –provides a fast, effective method of dust control.
- Spray Adhesives –Generally composed of polymers in a liquid or solid form mixed with water to form an emulsion that is sprayed on the soil surface. The mixing ratios and application rates will be in accordance with the manufacturer's recommendations for the specific soils on the site. Adhesives shall not be applied to wet soils or if there is a probability of precipitation within 48 hours.

For areas subject to traffic (traveling public or construction traffic) products and materials may be applied or placed on soil surfaces to prevent airborne migration of soil particles, including:

- Water Sprinkling – The site may be sprayed with water until the surface is wet. This is especially effective on haul roads and access routes.
- Polymer Additives –Polymers shall be mixed with water and applied to the driving surface using mixing ratios and application rates in accordance with the manufacturer's recommendations. No application of the polymer will be made if there is a probability of precipitation within 48 hours of its proposed use. Any polymers must be used in accordance with the NYSDEC issued "Conditions for Use" and "Application Instructions." This information can be obtained from the NYSDEC website.
- Barriers – Woven geotextiles or stone can be placed on the driving surface to effectively reduce dust throw and particle migration on haul roads.
- Windbreak – A silt fence or similar barrier can control air currents at horizontal intervals equal to ten times the barrier height. Preserve existing vegetation that acts as a wind barrier as much as practical.
- Wheel Washing – Mechanical or manual wet-method cleaning of on-road construction vehicle tires prior to leaving site.

SPECIAL NOTE

GENERATOR KNOWLEDGE FOR DISPOSAL OF TREATED WOOD

The U.S. Environmental Protection Agency (EPA) and New York State Department of Environmental Conservation (NYSDEC) technique for evaluating whether a material is hazardous for toxicity is the Toxicity Characteristic Leaching Procedure (TCLP). TCLP testing of pentachlorophenol ("penta") and creosote treated wood by the Electric Power Research Institute, Association of American Railroads, and others has conclusively demonstrated that treated wood products are not a hazardous waste. Under EPA's and NYSDEC's rules, such "generator knowledge" can be utilized in place of testing to determine that a waste is not hazardous. This information can be used as evidence that treated wood products can be disposed as non-hazardous waste, based on generator knowledge, in lieu of physical testing.

Generator knowledge information, obtained from the American Wood Preservers Institute (AWPI) can be viewed at their web site located at www.awpi.org . AWPI's information comes from studies conducted by the Electric Power Research Institute (EPRI), the Washington Public Ports Association (WPPA), and the Association of American Railroads (AAR). EPRI test results are for both penta-treated and creosote-treated wood. WPPA and AAR test results are for creosote-treated wood.

NOTE: Arsenically-treated (*e.g.*, chromated copper arsenate [CCA]) wood products disposed by the end user are exempt from classification as a federal hazardous waste regardless of the TCLP results for specified constituents from any individual sample. Also, wood products treated with preservatives that contain no TCLP constituents (*e.g.*, Kodiak Preserved Wood containing Copper Dimethyldithiocarbamate) are not hazardous waste.

SPECIAL NOTES
FOREST INSECT DISEASE CONTROL

MOVEMENT OF WOOD MATERIALS FROM PROJECT SITES

Pursuant to New York State Department of Environmental Conservation (NYSDEC) Regulations, 6NYCRR, part 192.5, *Firewood Restrictions to Protect Forests from Invasive Species*, it is unlawful to transport any firewood material more than 50 miles from its point of origin to limit the spread of invasive insect species. "Firewood" shall mean all wood of any species, cut or not cut, split or not split, regardless of length which is (a) in a form and size appropriate for use as a fuel, or (b) which is destined for use as a fuel. Firewood shall not include kiln-dried dimensional lumber, wood that has been chipped to a maximum piece size that is no greater than 1-inch in two dimensions, or logs or wood being transported to sawmills or other manufacturing facilities for use in their primary operations. All Thruway Authority/Canal Corporation (TA/CC) projects are subject to this requirement. Additional information can be found at the following link: http://www.dec.ny.gov/regs/4079.html

If firewood is to be moved within 50 miles of its point of origin a "Self-Issued Certificate of Origin for Transport and Possession of Untreated Firewood" must be completed. This form can be found at the following link: http://www.dec.ny.gov/docs/lands_forests_pdf/selfisscert.pdf

INVASIVE SPECIES AND QUARANTINE MATERIALS MOVEMENT

NYSDEC Regulations, 6NYCRR, part 192.6, *Quarantine Orders*, No person shall fail to comply with the provisions of any quarantine order issued by the Department pursuant to Environmental Conservation Law (ECL) section 9-1303. To the extent the provisions of section 192.5 *Firewood Restrictions to Protect Forests from Invasive Species* and such quarantine order are in conflict, the more restrictive provision shall apply. TA/CC is under New York State and Federal ash quarantines where it is unlawful to transport any ash material outside of several counties (see quarantine maps at http://www.agriculture.ny.gov/PI/eab/emerald_ash_borer_quarantine.pdf and http://www.dec.ny.gov/animals/47761.html). Therefore, any parts of ash trees, including leaves, bark, stumps, limbs, branches, roots, and ash logs of any length, and firewood (see above for definition of firewood) from ***ANY*** tree species, are all considered regulated articles and must be handled properly. Tree-felling, clearing and grubbing operations at project sites may result in the contractor's need to handle materials from ash tree species and/or firewood or chips from ***ANY*** tree species. To the greatest extent possible in areas of clearing and grubbing, ash trees should be pre-identified and marked prior to commencement of construction to promote the proper handling of these materials.

Un-infested ash materials in any form may be moved offsite, but only within the quarantine zone. Firewood from ***ANY*** tree species may never be moved more than 50 miles and never from the quarantine area, into non-quarantine areas. Transport of any wood needs the required transport certificate: http://www.dec.ny.gov/docs/lands_forests_pdf/selfisscert.pdf

Note: According to the quarantine maps, several parts of the Thruway are the boundary between the quarantine area (south) and the non-quarantine area (north). Therefore, transport of any wood material would be prohibited across the roadway from south to north, but acceptable from north to south.

Note: Any ash materials that are known or suspected to be infested with live emerald ash borer pests in any life stage must be reported immediately to the EIC and/or designee for further appropriate action and coordination with regulatory agencies.

SPECIAL NOTES
FOREST INSECT DISEASE CONTROL

Any ash materials chipped to a size no greater than 1-inch in at least two dimensions is considered safe to be transported outside the quarantine zone, but only in accordance with a Chip/Mulch Agreement and Transport Agreement received from the NYS Department of Agriculture and Markets (NYSDAM). If any regulated ash materials must be moved outside of the currently quarantined area, a certification from the NYS Department of Agriculture and Markets (NYSDAM) or USDA Animal & Plant Health Inspection Service (APHIS) must be obtained. For further information see the following links:
http://www.dec.ny.gov/animals/47761.html
http://www.agriculture.ny.gov/PI/eab.html

MARKER RELOCATION DURING CONSTRUCTION
EXISTING MILE MARKERS AND TENTH-MILE MARKERS AND DELINEATORS

All Mile Markers and Tenth-Mile Markers are to be maintained during construction of this project. The Contractor will be allowed to temporarily relocate them to avoid damage to them or for constructability purposes. The Mile Markers and Tenth-Mile Markers can be moved but the new location must be visible to traffic and be reasonably close to their original location. The Mile Markers must be returned to their original location upon completion of construction at that location. Cost for this work shall be included in the bid price for the various pay items in the Project, unless the work is specifically called for in the Contract Documents.

If the Contract calls for replacement of existing Milemarkers and/or Tenth-Milemarkers, they shall remain in place, or reset to a location reasonably close to their original location, until the new markers are installed.

SPECIAL NOTE

BIRD / BAT WASTE AWARENESS

The Contractor should be aware that there may be bird/bat waste in the work area. The waste may contain trace amounts of metals and the fungus *Histoplasma capsulatum*. Exposure to this fungus can result in the disease histoplasmosis. Proper health and safety precautions shall be identified in the contractor's health and safety plan in accordance with section 107-05. The disposal facility that accepts the bird/bat waste may need documentation as to its composition to determine that it is non-hazardous and/or otherwise suitable for disposal at that location.

BRIDGE (BIN) PLATE

One Bridge Identification Number (BIN) plate will be required for each bridge in this contract. For each bridge there may, or may not, be an existing BIN plate.

Therefore, one of the following conditions will exist with regard to BIN plates for any particular structure:

Condition No. 1. A BIN plate is attached to the structure but the nature of the work to be done does not require its removal.

Condition No. 2. A BIN plate is attached to the structure and the nature of the work to be done requires its removal.

Condition No. 3. A BIN plate is attached to the structure and is defaced, or otherwise damaged.

Condition No. 4. A BIN plate is not attached to the structure.

Under Condition No. 1. the Contractor's sole obligation shall be to protect the plate from damage during the course of the work.

Under Condition No. 2. the Contractor shall be required to remove and store the BIN plate until such time as the BIN plate may be reinstalled without danger of damage. This requirement shall also apply if the BIN plate is being transferred from an existing abandoned bridge to a new in-service bridge. The Contractor shall furnish all necessary expansion anchors.

Under Condition No. 3. the Contractor shall be required to furnish and install a new BIN plate, and remove the damaged BIN plate. The Contractor shall furnish the panel with reflective background, numerals and expansion anchors. IF the BIN number cannot be deciphered the Engineer will supply the number.

Under Condition No. 4. the Contractor shall be required to furnish and install a BIN plate on the completed structure. The Engineer will supply the Bridge Identification Number. The Contractor shall furnish the panel with reflective background, numerals and expansion anchors.

Regardless of which condition governs the BIN plate installation, should damage occur to the BIN plate and the Engineer determines it cannot be repaired, the Contractor shall furnish a new plate consisting of the panel with reflective background, numerals, and expansion anchors at no expense to the State. If the Engineer determines the BIN plate may be repaired, repair shall be done at no expense to the State. This requirement applies to all four conditions.

The material requirements for the three parts of the BIN plate are:

Panel with reflective background. The aluminum panel and reflective background shall conform to the material and fabrication requirements of Material Specification 730-01, Aluminum Sign Panels. The background material shall be green reflective sheeting conforming to Materials Specification 730-05.01 (Class A Sheeting). The size of the panels shall be 1/8 inch thick by 3 inch by 12 inch. The panels shall

BRIDGE (BIN) PLATE

have two 5/16 inch drilled or punched holes for mounting, located 1/2 inch from the ends of the panel and 1 1/2 inch from the top or bottom of the panel. The reflective sheeting used to form the background shall be a minimum of 3 inches wide by 10 inches long, or may be a full 12 inches long.

Numbers. The numbers shall be reflective sheeting conforming to Materials Specification 730-05.01 (Class A Sheeting), except that the adhesive shall be pressure-sensitive such that the numbers can be applied to the background in the field. The numbers shall be 2 inches high and silver-white in color conforming to FHWA series C dimensions.

Prior to placing the cutout numbers on the panel, the reflective background shall be clean and free of dirt and oil which may adversely affect proper adhesion. The numbers shall be placed on the reflective background, perpendicular to the longitudinal axis of the panel, and vertically centered. The reflective background and numbers shall be coated and/or edge sealed in accordance with the recommendations of the sheeting manufacturer.

Expansion Anchors. 1/4 inch diameter by 1 1/2 inch long stainless steel nail drive expansion anchors meeting GSA Specification FF-S-325, #3.2.5.2 shall be used to attach the BIN plates to concrete and masonry surfaces.

The BIN plates shall be attached to the beginning abutment of the bridge using expansions anchors. The plate shall be placed high on the abutment, near the fascia of the bridge.

The cost of this work shall be included in the various items of the contract.

SPECIAL NOTE

PG BINDER AND MIX DESIGN LEVEL

Requirements of this note apply to all Section 402 and Section 404 Asphalt (HMA and WMA) items in this contract.

PG BINDER

Use a **PG 64H-22** (High) meeting the requirements of AASHTO M 332, *Standard Specification for Performance Graded Asphalt Binder using Multiple Stress Creep Recovery (MSCR),* for the production of hot mix asphalt mixtures for this project. Terminal Blend Crumb Rubber modifier may be used for this PG binder.

When terminal blend CRM PG binder is used, the following shall apply:

- Crumb rubber particles shall be finer than #30 sieve size.
- The CRM PG binder shall be storage-stable and homogeneous.
- The Dynamic Shear Rheometer (DSR) shall be set at 2-mm gap.
- The CRM PG binder shall be 99% free of particles retained on the 600 µm sieve as tested in accordance with Section 5.4 of M 332.

Use of polyphosphoric acid (PPA) to modify the PG binder properties is prohibited for mixtures containing limestone, limestone as an aggregate blend component, limestone as a constituent in crushed gravel aggregate, or recycled asphalt pavement (RAP) that includes any limestone. This prohibition also applies to the use of PPA as a cross-linking agent for polymer modification.

MIX DESIGN

The mixture designs must be developed in accordance with the criteria specified in the HMA items that are appropriate for an Estimated Traffic Level of ≤30 Million ESALs.

Note: The PG binder for this project may be modified with CRM additives to meet the requirements stated above. Handling of the HMA shall be discussed at pre-construction and pre-paving meetings.

SPECIAL NOTE

RAP PG Binder Contribution

When greater than 10% of recycled asphalt pavement (RAP) is utilized in the production of hot mix asphalt (HMA) Top Course for this contract, the following minimum asphalt content will be utilized in the final mixture design calculation for optimum asphalt content:

HMA Mixture	Minimum Asphalt Content (%)
9.5 HMA	6.0
12.5 HMA	5.4

The mixture design will be formulated such that all the volumetric properties are within the criteria specified in the latest Material Method 5.16. The total targeted asphalt content of virgin binder and the accepted RAP asphalt contribution shall not be less than the minimum asphalt content of the mix design during production indicated in the above table.

SPECIAL NOTE

OPTIONAL USE OF WARM MIX ASPHALT (WMA) TECHNOLOGIES

The contractor has the option of using an Approved WMA Technology in the production of all 402, *Hot Mix Asphalt (HMA)* items, except *SUPERPAVE HMA with Ice Retardant* items, *Waterproofing Bridge Deck HMA* items, and *Paver-Placed Surface Treatment* items, at no additional cost to the State.

If the contractor chooses to use a WMA technology, the provisions of §401 and §402 shall apply including the following:

Use an approved technology appearing on the Approved List for *Technologies for Warm Mix Asphalt*. Design a mixture using a WMA Technology in accordance with MM 5.16, *Superpave Hot Mix Asphalt Mixture Design and Mixture Verification Procedure*. At a minimum, a one point verification of the mixture's volumetric properties is acceptable for the following situations:

- When the WMA mix design is based on an existing Production Status HMA mix design.
- When the WMA mix design is based on, and utilizes a different WMA technology than, an existing Production Status WMA mix design.

Comply with the latest manufacturer's "Production, Testing, and Compaction Details" from the Approved List for incorporating the WMA technology. Test specimens may be made from plant produced or laboratory prepared WMA. Test specimens must be made from plant produced WMA if adding the WMA technology in the lab does not simulate the production process. The Regional Materials Engineer (RME) may require a State representative be present during the fabrication and testing. Submit the WMA design to the RME for review and verification at least 14 calendar days before production, including:

- Name of WMA technology and the target dosage rate.
- If using an additive other than water,
  - Submit a MSDS for the additive.
  - Submit either enough of the additive for the laboratory mix design verification, or the additive pre-blended in the PG Binder at the correct dosage. If the additive is not pre-blended into the PG Binder, include directions for properly incorporating the additive into the laboratory made mixture.
- Prior to the submission of any mix design, contact the RME to determine if there is an increased concern regarding the mixture's moisture susceptibility based on the WMA technology and/or the type of aggregate being used, or the performance of similar mixes. The RME may require AASHTO T 283 moisture susceptibility test results, meeting a minimum Tensile Strength Ration (TSR) of 80%, as part of the mix design submission.

Submit Production Quality Control Plan revisions incorporating the WMA technology if not previously submitted.

For 80 Series Compaction Method, complete all breakdown roller passes before the mat temperature falls below 230° F, unless approved by the Director, Materials Bureau.

When the asphalt mixture is being placed over a *Sheet-Applied Waterproofing Membrane*, maintain a minimum delivery temperature in accordance with the Material Detail Sheets prepared by the membrane manufacturer.

HMA WITH CRUSHED GLASS

SCOPE. This specification covers the requirements for the addition of crushed glass to hot mix asphalt mixtures. The provisions of Section 402 - Hot Mix Asphalt (HMA) Pavements applies except that the Contractor has the option of blending of the crushed glass in the following mixes:

1 1/2 inch Nominal Max. Size
1 inch Nominal Max. Size
3/4 inch Nominal Max. Size
Truing and Leveling Course

If the Contractor chooses the crushed glass option, the following modifications to the Standard Specifications shall apply:

MATERIAL REQUIREMENTS

Crushed glass shall be subject to the approval of the Regional Materials Engineer prior to its use. The crushed glass shall contain no more than 1% (by weight) contaminants and shall meet the following gradation:

Sieve Size	Percent Passing
3/8 inch	100
1/4 inch	90 - 100
No. 30	0 - 20

Note: The gradation requirements may be modified upon approval by the Regional Materials Engineer.

Crushed glass may be included in the mixture up to 5%, maximum, of the total aggregate weight. The crushed glass, aggregate, and Performance-Graded Binder (PGB) shall meet the requirements specified in the Standard Specification §401-2.01 Hot Mix Asphalt Designs and §401-2.04 Performance-Graded Binder.

CONSTRUCTION DETAILS

The crushed glass shall be proportioned from a separate feed bin approved by the Regional Materials Engineer. In addition, all requirements pertaining to aggregate shall apply to crushed glass including the equipment requirements for automatic proportioning and recording as stipulated for aggregate in §401-3.08.

METHOD OF MEASUREMENT. The provisions of §401-4 and §402-4, Method of Measurement, shall apply.

BASIS OF PAYMENT. The provisions of §402-5, Basis of Payment, shall apply.

USE OF RECLAIMED ASPHALT SHINGLES (RAS) IN THE PRODUCTION OF ASPHALT MIXTURES

DESCRIPTION. The requirements below cover the use of Reclaimed Asphalt Shingles (RAS) in the production of asphalt mixtures. Sections 401 and 402 of the NYS Standard Specifications apply except as modified herein.

MATERIAL REQUIREMENTS

The Contractor has the option of using the following:

- Manufactured Waste (MW) RAS may be used in shim, base, binder, and top courses (excluding 6.3 HMA Top Course, Waterproofing Bridge Deck Overlay, and Ice Retardant mixtures).
- Post Consumer Waste (PCW) RAS and may be used in shim, base and binder courses.

The RAS must be stockpiled at the plant facility and shall be subject to the approval of the Regional Materials Engineer (RME) prior to its use. RAS shall meet the following requirements:

- Shall be from a source that has obtained a beneficial use determination (BUD) from the NYS Department of Environmental Conservation (DEC) as specified in 6 NYCRR 360-1.15.
- Shall be certified to be asbestos free.
- Shall be completely free of nails. In addition, it shall contain no more than 1% by weight of other deleterious materials such as glass, wood, plastic, etc.
- Shall meet the following gradation:

Sieve Size	Percent Passing	
	Min.	Max.
¼ inch (6.3 mm)	100	-
#4 (4.75 mm)	90	100
#8 (2.36 mm)	75	90
#16 (1.18 mm)	50	70
#30 (0.600 mm)	30	55
#50 (0.300 mm)	15	40
#100 (0.150 mm)	5	25
#200 (0.075 mm)	-	15

The maximum RAS allowed in the mixture is 2% by weight of the total mixture. A Control Plan for using shingles in HMA shall be developed and submitted to the Regional Materials Engineer detailing the control and testing of the stockpiles. RAS shall be uniformly blended with RAP to reduce clumping and must be stockpiled separate from other stockpiles. Other methods of reducing RAS clumping can be utilized with the approval of the RME.

Rejuvenator. A rejuvenator shall be added to PCW RAS using a pugmill or similar equipment to pre-blend and stockpile the rejuvenated PCW RAS. Alternatively, a spray system may be used to spray the rejuvenator onto the PCW RAS prior to its introduction into the plant mixer. The

rejuvenator shall meet the requirements of ASTM D 4552, *Standard Practice for Classifying Hot-Mix Recycling Agents*. Other liquid products or methods which facilitate softening of the PCW RAS binder may be used with the approval of the Regional Materials Engineer. The application rate shall be as recommended by the rejuvenator supplier.

Mixture Design. Prior to production of the HMA, the mixture design shall be developed to meet all the requirements in the latest Materials Method (MM) 5.16, *Hot Mix Asphalt (HMA) Mixture Design and Mixture Verification Procedures,* available on the Department's website. The mixture design shall also meet the performance test criteria listed in the table below. The testing must be performed by an AASHTO Materials Reference Laboratory (AMRL) approved laboratory that has the capability of performing these tests. When RAS is used in conjunction with RAP, the total percentage of reclaimed material shall not exceed the maximum of 20% for Top Course and Binder Course, and 30% for Base Course currently allowed under the specifications during the production of HMA.

Mixture Performance Test Requirements

Tests	Specification Criteria
Dynamic Modulus, AASHTO TP 79	Report
Flow Number, AASHTO TP 79	200, min.
Flexural Beam Fatigue, AASHTO T 321, 750μ-Strains	10,000 cycles, min.
Overlay Tester, TxDOT TEX-248F	300 cycles, min.

Reclaimed PG Binder Ratio: The ratio of reclaimed PG binder from the RAP and RAS to the total PG binder content shall not exceed 0.2.

CONSTRUCTION DETAILS

The provisions of Section 401 and Section 402 apply except that the RAP/RAS stockpile shall be tested at a frequency of at least once per day of production to determine the asphalt content and the gradation of the combined reclaimed material.

REINFORCEMENT FOR CEMENT CONCRETE

Bar reinforcement and wire fabric specified in the Contract Documents shall be in accordance with the following:

Bar Reinforcement used on this project shall meet the requirements of Section 709-01 *Bar Reinforcement, Grade 60,* or Section 709-14 *Bar Reinforcement, Grade 75,* as detailed on the plans. No substitutions will be allowed. Bar reinforcement (for the items listed below) shall be galvanized and fabricated in accordance with ASTM A767 and meet the requirements of Section 709-11 *Galvanized Bar Reinforcement*. The requirements of ASTM A767 Section 4.3 (Chromating) will not be waived.

Wire Fabric Reinforcement used on this project (for the items listed below) shall meet the requirements of Section 709-02 *Wire Fabric for Concrete Reinforcement*. Any Wire Fabric Reinforcement required for the items listed below shall be galvanized in accordance with Section 719-01 *Galvanized Coatings and Repair Methods*, Type I. Galvanized Wire Fabric Reinforcement shall be fabricated and galvanized in accordance with ASTM A123 and ASTM A767. The requirements of ASTM A767 Section 4.3 (Chromating) will not be waived.

Item Numbers that require the use of **Galvanized Bar Reinforcement** and/or **Galvanized Wire Fabric Reinforcement** on this project are as follows:

555.0105
555.09
557.0109
557.2009
569.04
580.01
609.0401

Reinforcement for Reinforced Concrete Pipe and Related Drainage Structures shall meet the requirements of Section 706 – *Concrete, Clay, and Plastic Pipe.*

PILE DRIVING CRITERIA

Piles will be acceptable only when driven to pile driving criteria established by the Engineer. Prerequisite to establishing these criteria, the Contractor shall submit Form BD 138M – Pile and Driving Equipment Data to the Engineer for approval. The Engineer shall be allowed 15 working days upon receipt for review. Each separate combination of pile and pile driving equipment proposed by the Contractor shall require the submission of a corresponding Form BD 138M.

The following additional information or incidental equipment is required for each type of hammer proposed:

Single Acting Diesel Hammers
The Contractor shall supply a saximeter for the inspector's use in recording blows per minute and stroke.

Double Acting Diesel Hammers
The Contractor shall supply the manufacturer's calibration chart relating bounce chamber pressure (for a specific hose size/length) to the rated hammer energy. The actual hose size and length shall also be provided. This information shall be submitted with the Form BD 138M and also provided to the inspector.

Air/Steam Hammers
The Contractor shall supply manufacturer's data for the compressor (or boiler) which demonstrates that pressure supplied, minus hose losses, is adequate for the proposed hammer. The actual supply hose size and length shall also be provided. This information shall be submitted with the Form BD 138M.

Hardwood, Plywood, Wire Rope and Asbestos shall not be used for hammer cushions. Hammer cushions shall be inspected by the Engineer prior to driving and after every 100 hours of driving. Hammer cushions shall be replaced when the cushion thickness decreases to less than 75% of the original cushion thickness.

SPECIAL NOTE:
SECTION 551 – PILES AND PILE DRIVING EQUIPMENT
FURNISHING EQUIPMENT AND PERSONNEL – DYNAMIC LOAD TESTING OF PILES

The Contractor shall furnish certain equipment and personnel necessary to perform field testing of piles and evaluate pile hammer efficiency. All incidental labor and material necessary to make the work area accessible shall also be supplied by the Contractor.

The actual tests shall be conducted by the Engineer. The Contractor's responsibility is limited to the supplying of support services for the individual tests. Tests shall be performed at the locations indicated on the Contract Plans and where ordered by the Engineer.

A. **Equipment and Manpower to be supplied by the Contractor:**

1. Pile driving equipment (with crew) of the same type which will be used to drive all other similar piles on the project.

2. A source of electrical power 120 volts AC, 60 cycle, at each test location.

3. A suitable test enclosure to protect the computer, tape recorder and test equipment operator from conditions of wet, wind, and cold. Heat shall be provided, if necessary, in order that a minimum temperature of 50º F [10º C] shall be maintained within the enclosure. The test enclosure shall be sufficiently near the pile top (when the pile is in the driving leads) to be reached by electrical cable(s).

4. Incidental labor, as necessary.

B. **Equipment and Services to be Supplied by the Authority:**

1. Force and acceleration transducers.

2. Analog computer with necessary recording arrangements.

3. A representative of the Authority will perform the tests.

The Contractor shall notify the Engineer of his pile driving schedule at least 72 hours prior to driving piles at any general location where a Dynamic Test is indicated. At each pile location indicated for testing, the Contractor's services will be required for a period of approximately one hour.

The purpose of the testing is to monitor stresses in the pile as it is being driven, and to evaluate pile capacity and pile hammer efficiency. The Engineer will direct the testing work.

A dynamic load testing procedure, known as the "Impact Driving Method," will be used. This procedure entails the following steps:

A. Prior to being struck with the pile driving hammer, each pile to be tested will be instrumented with force and acceleration transducers.

B. Dynamic measurements resulting from the pile hammer blows will be automatically recorded.

C. Upon determination by the Engineer that valid data has been recorded, the instrumentation will be removed.

The Contractor will schedule equipment movements to ensure that testing is done as part of the normal driving schedule, insofar as it is possible.

The cost of this work shall be included in the unit price bid for the Dynamic Pile Testing Item.

COFFERDAM AND WATERWAY CONSERVATION NOTES

The designer shall edit note 1 to:

1. **Add the specific cofferdam locations for the project,**
2. **Indicate only those cofferdam types that are reasonable and have been approved for each cofferdam location,**
3. **Include the drawings that apply for each cofferdam (available in the Drafting Dept. or on the "J" drive.**
4. **Include any specific health and safety requirements for working with the specific sediments at each cofferdam location (for both the placement of the cofferdam and work within the cofferdamed work area).**

The designer shall also fill out the table on each conceptual cofferdam sketch to include the maximum permitted fill volume, and the maximum permitted dewatered work area for each cofferdam type at each cofferdam location.

1. The following conceptual types of cofferdams have been permitted for the indicated locations of this project. A conceptual sketch of each of these cofferdam types also follows:

   Location:

   Cellular Cofferdam
   Braced Cofferdam
   Sheet Pile Cofferdam
   Sand Bag Cofferdam
   Bladder Cofferdam
   Earth Fill Cofferdam
   Structural Unit Cofferdam
   Filled Structural Unit Cofferdam
   Window Box Cofferdam

   The fill for the above cofferdams shall also be placed on a separation barrier, and any steel or concrete sections, or any equipment that has come into contact with the existing sediments, shall be washed before removal from the site in accordance with the "Contaminated Materials Site Safety and Health Requirements" found in the proposal.

2. The Contractor is required to submit a plan of his/her proposed method of dewatering the work area, to the Chief Engineer for approval at least 14 working days prior to any work. As part of the Authority's approval process, a copy of the plans may be submitted to the U.S. Corps of Engineers (COE) for their verification that the proposed plans conform to the pre-approved details.

   Should the proposed plan exceed the maximum permitted fill volume, exceed the maximum permitted dewatered work area, or be an alternate method of cofferdaming the work area, a permit modification, prepared by the Canal Corporation, will be submitted to the U.S. Corps of Engineers (COE) and/or NYS Department of Environmental Conservation (DEC), as appropriate, for their approval.

   The Contractor is hereby notified that neither the NYS Canal Corporation nor the NYS Thruway Authority have control over the COE or DEC approval procedures, and are not responsible for any delay associated with obtaining the necessary approvals of the permit modifications. The contractor shall make timely submissions of all necessary information to minimize all delays.

3. The cost of dewatering the work area, regardless of the source of water, shall be included in the cofferdam item.

COFFERDAM AND WATERWAY CONSERVATION NOTES

4. The Contractor shall conduct his/her operations to the satisfaction of the Engineer to prevent or reduce to a minimum any damage to any waterway from pollution by debris, sediment or other foreign material, or from the manipulation of equipment and/or materials in or near such waterways. He/she shall not return directly into a waterway, or to a ditch immediately flowing into a waterway, any water which has been used for wash purposes or other similar operations which could cause this water to become polluted with concrete, sand, silt, cement, oil, lead-based materials or other impurities. If he/she uses water from a waterway, he/she shall construct an intake or temporary dam to protect and maintain water rights, and to maintain fish life downstream. These temporary measures shall be removed and the area restored at the completion of the work.

5. No discharge of fresh concrete is allowed into the waterway.

6. To accommodate the work and staging areas, the Contractor shall minimize the cutting of trees over six inches in diameter to only those specifically allowed by the Engineer.

7. A buffer of trees and native plant material shall be maintained along the edges of the waterway.

8. The source of any fill shall be identified by the Contractor and approved by the Engineer.

9. Place the cofferdam on two (2) layers of impervious membrane.

ARCHIVING

DELETE Section 202.10 of the New York State Steel Construction Manual in its entirety and **ADD** the following:

ARCHIVING – After successful erection of the steel components and prior to final acceptance, the Contractor shall deliver two (2) complete sets of final signature approved shop drawings in the Tag Image File Format (tiff). CCITT group IV, 2D compression minimum 200 dpi on two (2) separate compact discs. Thereafter, these shall remain the property of the New York State Thruway Authority.

For a list of Items requiring archiving disc of final signature approved shop drawings see Appendix G of the New York State Steel Construction Manual.

The Contractor shall also deliver the original signature approved hard copy of all drawings requiring a Professional Engineer's signature and stamp.

Items requiring a Professional Engineer's signature and stamp include, but are not limited to, erection, demolition, and transportation drawings.

Final payment will be held until the above requirements are met.

REQUIRED DOCUMENTATION FOR ALL ATTENUATING TERMINALS FOR GUIDE RAIL AND ALL ATTENUATORS

A minimum of two (2) weeks prior to installing any materials required under these items, the Contractor shall submit to the Engineer two (2) copies of the Manufacturer's Drawings, Design Manuals, Installation Manuals, and Maintenance Manuals prepared for the product and one (1) copy of the same manuals intended for the Section Supervisor of the Section where the unit is being installed. The project being installed shall be the manufacturer's most current approved unit. The submitted drawings and manuals shall match the provided product. The Contractor shall install the crash-cushion only after receiving authorization from the Engineer to do so. No payment shall be made until all the above drawings and manuals have been transmitted to the Engineer and the Section Supervisor.

Reflective sheeting shall be applied to the nose of each attenuating device installed. If sheeting is not specified, it shall consist of alternating 4-inch-wide yellow retroreflectorized stripes and black opaque stripes placed diagonally at 45 degrees or in chevron formation as directed by the Engineer. The retroreflectorized stripes shall conform to §730-05, Reflective Sheeting, ASTM Type IX (Class E). The reflective sheeting shall be rectangular in shape and cover the entire approach end of the attenuating terminal or attenuator. The cost of the reflective sheeting shall be included in the bid price for each attenuator and attenuating terminal.

DELIVERY AND PICK-UP
OF
SIGN PANELS, MILE MARKERS, DELINEATORS AND SNOWPLOW MARKERS

Overhead and ground-mounted sign panels, mile markers, delineators and/or snowplow markers included in the project will be supplied by the Thruway Authority and delivered to Syracuse Section Maintenance located at 6150 Tarbell Road Syracuse, NY 13206 (just off of Interchange 35, Syracuse – East – Route 298, MP 278.93) for pick-up by the Contractor. The Contractor shall request the signs from the Engineer a minimum of 45 days prior to the scheduled installation. The Contractor shall inspect the condition of the signs and notify the Engineer of any defects prior to pick-up.

US CUSTOMARY ASPHALT PRICE ADJUSTMENT

ASPHALT PRICE ADJUSTMENT[1] CONVERSION FACTORS		
MATERIAL DESCRIPTION	**CONVERSION FACTOR**	**ITEM NUMBER[2]**
Bituminous Stabilized Course	0.065 t PGB/yd^3	302.01
Asphalt Treated Permeable Base, Type 1	0.030 t PGB/t	402.010902
Asphalt Treated Permeable Base, Type 2	0.035 t PGB/t	402.011902
Shim Course	0.0825 t PGB/t	402.058902
6.3 SUPERPAVE HMA	0.067 t PGB/t	402.068xxxx8 RR
9.5 SUPERPAVE HMA	0.062 t PGB/t	402.09xxxx
12.5 SUPERPAVE HMA	0.055 t PGB/t	402.12xxxx
19 SUPERPAVE HMA	0.049 t PGB/t	402.19xxxx
25 SUPERPAVE HMA	0.045 t PGB/t	402.25xxxx
37.5 SUPERPAVE HMA	0.040 t PGB/t	402.37xxxx
Paved Placed Surface Treatment, Types A, B, and C	0.064 t PGB/t	415.01xxyy03
Micro-Surfacing, Quick-Set Slurry	0.078 t PGB/t	410.102102 RR, 410.103102 RR, 410.104102 RR, 410.202302 RR, 410.203302 RR
Straight Tack Coat	0.0026 t PGB/gal	407.0103
Asphaltic Sealants (ASTM 6690)	0.0027 t PGB/gal	402.75xx RR, 402.76xx RR, 402.76020018
Chip Seal	0.0027 t PGB/gal	410.0105006, 410.07
Asphalt Emulsion for Cold Recycling	0.0027 t PGB/gal	416.02xx
Fog Seal and Dilute Tack Coat	0.0016 t PGB/gal	407.0102, 416.04, 410.0106006
PG Binder for Cold Recycling	0.0043 t PGB/gal	416.03
Asphaltic Sealant – Clean & Seal	0.225 t PGB/LNMI	402.76030008, 412.76030001
Asphaltic Sealant – Treating Cracks	0.240 t PGB/LNMI	412.76040001
Asphaltic Sealant – Rout & Seal	0.270 t PGB/LNMI	402.76010008, 412.76040001
Repair of HMA Pavement, Temporary Asphalt	See Note 4	633.14, 633.15, 633.16, 619.06xx
True and Leveling, Asphalt Sidewalks, Driveways, Bike Paths, Gutters	See Note 5	402.017902, 402.01890xxx, 608.020102, 624.02xx

US CUSTOMARY ASPHALT PRICE ADJUSTMENT

ASPHALT PRICE ADJUSTMENT[1] CONVERSION FACTORS
Notes: 1. In accordance with Standard Specification §698-3.01, the index value for the asphalt price adjustment is the average posted price of Performance Graded Binder (PGB) for the month of bid letting. 2. Item Number - This is the contract pay item number under which these materials are most frequently paid. Unless indicated otherwise, materials similar to those indicated under the column entitled “Material Description” are also eligible for adjustment using the factor listed for a similar material with the same pay units regardless of the actual contract pay item number. 3. Quality Adjustment Items (402/608/624) are not eligible for asphalt price adjustment. 4. Asphalt Price Adjustment Conversion Factor based on units of TONS of asphalt placed, not the pay units of this item. The conversion factor for HMA Pavement Repair and Temporary Asphalt will be based on the actual asphalt mixture used. 5. The conversion factor for Truing and Leveling, Driveways, and other items that allow asphalt mix options, will be based on the actual mixtures used. 6. A two digit suffix (RR) at the end of a contract pay item indicates a special specification. 7. The conversion factors for HMA mixed with slag shall be increased by 25%. 8. t = tons

US CUSTOMARY FUEL PRICE ADJUSTMENT

FUEL PRICE ADJUSTMENT[1] CONVERSION FACTORS		
MATERIAL DESCRIPTION	**CONVERSION FACTOR**	**ITEM NUMBER[2]**
Unclassified Excavation	0.35 gal/yd^3	203.02
Embankment	0.10 gal/yd^3	203.03, 620.xx
Fill	0.45 gal/yd^3	203.05, 203.06, 203.07, 203.08xx, 203.20, 203.21, 203.25
Controlled Low Strength Material	1.00 gal/yd^3	204.01, 204.02, 204.03, 204.04
Trench/Culvert/Structure Excavation	0.50 gal/yd^3	206.01, 206.0201
Bituminous Stabilized Course	1.40 gal/yd^3	302.01, 307.01
Sub-base Course	1.00 gal/yd^3	304 Items
Hot Mix Asphalt	2.50 gal/ton	402 Items[3], 405.01, 608.020102[3], 619.0601[4], 624.02xxxx[3,4], 633.14[3,4], 633.15[3,4], 633.16[3,4]
Milling	0.10 gal/yd^2	490 Items
Portland Cement Concrete Pavement	1.00 gal/yd^3	502 Items[3], 503.1010, 503.1011, 503.1012
Fill Type Retaining Walls	0.45 gal/yd^3	554.30xx[5], 554.31[5], 554.4x[5]
Footing Concrete & Concrete for Structures - All classes	1.00 gal/yd^3	555 Items, 582.05
Approach Slabs	0.33 gal/yd^2	557.2001, 557.2002, 557.2003, 557.2009, 557.22
Structural Slabs with bottom formwork	0.25 gal/yd^2	557.01xx, 557.07, 557.30
Structural Slabs - no bottom formwork	0.15 gal/yd^2	557.05xx, 557.09
Class D Concrete	0.05 gal/yd^2	557.13, 584 Items
Concrete Barrier, Type A	0.16 gal/ft	606.3001, 606.3021, 606.3031
Concrete Barrier, Type B	0.19 gal/ft	569.01, 606.3002, 606.3022, 606.3032
Concrete Barrier, Type C	0.22 gal/ft	606.3003, 606.3023, 606.3033
Concrete Barrier, Half Section	0.11 gal/ft	569.02, 606.3004, 606.3024, 606.3034
Concrete Median Barrier, Single Slope	0.23 gal/ft	569.05, 606.3041, 606.3043, 606.3044
Concrete Median Barrier Wide, Single Slope	0.28 gal/ft	606.3051, 606.3053, 606.3054

US CUSTOMARY FUEL PRICE ADJUSTMENT

FUEL PRICE ADJUSTMENT[1] CONVERSION FACTORS		
MATERIAL DESCRIPTION	**CONVERSION FACTOR**	**ITEM NUMBER[2]**
Concrete Barrier Half Single Slope	0.17 gal/ft	569.04, 606.3061, 606.3063, 606.3064
Vertical Faced Concrete Parapet	0.10 gal/ft	569.03
Gravel, Stone, Slag	1.00 gal/yd^3	411.01, 411.02, 411.03, 623.1x
Concrete Sidewalks and Driveways	1.00 gal/yd^3	608.01xx
Topsoil	0.45 gal/yd^3	610.10, 610.11xx, 610.14xx

Notes:

1. In accordance with Standard Specification §698-3.02, the index value for the fuel price adjustment is the posted price for the month of bid letting.
2. Item Number - This is the contract pay item number under which these materials are most frequently paid. Unless indicated otherwise, materials similar to those indicated under the column entitled “Material Description” are also eligible for adjustment using the factor listed for a similar material with the same pay units regardless of the actual contract pay item number.
3. Quality Adjustment Items (402/502/608/624) are not eligible for fuel price adjustment.
4. Fuel Price Adjustment Conversion Factor based on units of TONS of asphalt placed, not the pay units of this item.
5. Fuel Price Adjustment Conversion Factor based on units of CY of backfill paid under this item, not the pay units of this item.

AFFIRMATIVE ACTION REQUIREMENTS

GOALS FOR DISADVANTAGED/MINORITY/WOMEN'S BUSINESS ENTERPRISE (D/M/WBE) PARTICIPATION

The Department has established the following utilization goal(s) for this contract, expressed as a percentage of the total contract bid amount. For clarification of Disadvantaged Business Enterprise (DBE) Utilization, Minority Business Enterprise (MBE) Utilization or Women's Business Enterprise (WBE) Utilization requirements refer to §102-12 *D/M/WBE Utilization* of the Standard Specifications.

Disadvantaged Business Enterprise (DBE) Utilization Goal	_____% (Federal-Aid Only)
Minority Business Enterprise (MBE) Utilization Goal	__8__% (Non-Federal-Aid Only)
Women's Business Enterprise (WBE) Utilization Goal	__7__% (Non-Federal Aid Only)

Directories and/or Information related to the current certification status of Disadvantaged Business Enterprises can be obtained from the NYS Unified Certification Program website at: http://biznet.nysucp.net

Direct questions concerning Disadvantaged Business Enterprise Utilization to:

NYS Department of Transportation
Office of Construction
50 Wolf Road Pod 51
Albany, New York 12232
(518) 457-6472

Direct questions concerning Disadvantaged Business Enterprise Certification to:

NYS Department of Transportation
Contract Audit Bureau
DBE Certification
50 Wolf Road, 1st Floor South
Albany, New York 12232
(518) 457-3180

Directories and/or information related to the current certification status of Minority and Women's Business Enterprises can be obtained by contacting:

Empire State Development Corporation
Office of Minority and Women's Business Development
625 Broadway
Albany, New York 12207
(518) 292-5100
https://ny.newnycontracts.com/

EQUAL EMPLOYMENT OPPORTUNITY REQUIREMENTS – STATE

1. **REQUIREMENTS** – During the performance of this contract, the Contractor agrees to comply with the Equal Employment Opportunity (EEO) requirements specified herein.

2. **DEFINITIONS –** As used in these requirements, the following definitions will apply:

   A. "Covered Area" means the geographical area described in the solicitation from which this contract resulted or the geographic area within which this contract will be performed.

   B. "Authority" means the New York State Thruway Authority.

   C. "Executive Director" means the Executive Director of the New York State Thruway Authority, or his/her duly authorized representative.

   D. "Compliance Unit of Contracts and Construction Management" means the Thruway Authority's Compliance Unit or his/her duly authorized representative.

   E. "Employer Identification Number" means the Federal Social Security Number used on the Employer's Quarterly Federal Tax Return, U.S. Treasury Department form 941.

   F. "Minority" includes:

      (i) Black (all persons having origins in any of the Black African racial groups not of Hispanic origin);

      (ii) Hispanic (a person of Mexican, Puerto Rican, Dominican, Cuban, Central or South American descent of either Indian or Hispanic origin, regardless of race;

      (iii) Asian and Pacific Islander (all persons having origins in any of the original peoples of the Far East, Southeast, Asia, the Indian Subcontinent, or the Pacific Islands); and

      (iv) American Indian or Alaskan Native (all persons having origins in any of the original peoples of North America and maintaining identifiable tribal affiliations through membership and participation or community identification. Identification may be made by any suitable authority in the community such as an educational institution, religious organization, or a state agency).

3. **NON-DISCRIMINATION CLAUSE** – The Contractor will ensure equal employment opportunity by not discriminating against any applicant for employment because of race, color, religion, sex, national origin, age, disability, or marital status, regarding, (among other things) the following: upgrading, demotion, transfer, recruitment, recruitment advertising, layoff, termination, rates of pay or other forms of compensation and selection for training, including apprenticeship.

4. **MINORITY AND WOMEN EMPLOYMENT GOALS –** The Contractor shall make a good-faith effort to ensure equal employment opportunity by taking the affirmative action's set forth in paragraph 6A through P of these requirements. The Contractor's success in achieving or bettering the goals set forth herein shall be a substantial factor in any determination of whether the Contractor has complied with its obligation to ensure equal employment opportunity in the performance of this contract. The goals are expressed as percentages of the total hours of employment and training that the Contractor should reasonably be able to give to female or minority employees in a certain covered area. The hours of minority and female employment and training must be substantially uniform throughout the length of the contract, and in each trade. These goals were established from materials published by the NYS Department of Economic Development based on appropriate workforce, demographic or other relevant data or labor force developed by the Division of Minority & Women's Business Development utilizing the 1990 Census Data.

EQUAL EMPLOYMENT OPPORTUNITY REQUIREMENTS – STATE

5. **TRAINING SPECIAL PROVISION –** If the contract proposal includes the Training Special Provision, the Contractor is required to comply with that provision as part of these Equal Employment Opportunity Requirements. The Training Special Provision requires the Contractor to provide training to at least one minority or woman indentured apprentice or trainee. If the Contractor fails to meet the employment goals for minorities or women specified herein, additional training of minorities and women will be required to satisfy the employment goals.

6. **AFFIRMATIVE ACTION STEPS** – The Contractor shall implement affirmative action steps at least as extensive as the following:

   A. Ensure and maintain a working environment free of harassment, intimidation, and coercion at all sites, and in all facilities at which the Contractor's employees are assigned to work. The Contractor shall specifically ensure that all foremen, superintendents, and other on-site supervisory personnel are aware of a carry out of the Contractor's obligation to maintain such a working environment, with specific attention to minority and female individuals working as such sites or in such facilities.

   B. Establish and maintain a current list of minority and female recruitment sources, provide written notification to minority and female recruitment sources and to community organizations when the Contractor or its unions have employment opportunities available, and maintain a record of the organizations' responses.

   C. Maintain a current file of the name, address, and telephone number of each minority and female off-the-street applicant and minority or female referral from a union, a recruitment source, or community organization and of the action which was taken with respect to each such individual. If such individual was sent to the union hiring hall for referral and was not referred back to the Contractor by the union, or if referred, not employed by the Contractor, this shall be documented in writing to the Compliance Unit and noted in the file with the reasons therefore, along with whatever additional actions the Contractor may have taken.

   D. Provide immediate written notification to the Compliance Unit when the Contractor has information that the union referral process has impeded the Contractor's efforts to meet its obligation.

   E. Develop on-the-job training opportunities and/or participation in training programs which expressly include minorities and women, including upgrading programs and apprenticeship and trainee programs relevant to the Contractor's employment needs, especially those programs funded or approved by the United States Department of Labor, the New York State Department of Labor, or the New York State Thruway Authority and appropriate for utilization on New York State Thruway Authority projects. The Contractor shall provide notice of these programs to the sources complied under 6.B. above. If the Contractor fails to develop or participate in such apprentice or training programs, its failure to meet the goal set forth herein will be presumed to be noncompliance with these requirements.

   F. Disseminate the Contractor's equal employment opportunity policy by providing notice of the policy to unions and training programs and requesting their cooperation in assisting the Contractor in meeting its equal employment opportunity obligations, by including it in any policy annual and collective bargaining agreement, by publicizing it in the company newspaper, annual report, and other similar items, by specific review of the policy with all management personnel and with all minority and female at least once a year, and by posting the Contractor's equal employment opportunity policy on bulletin boards accessible to all employees at each location where work under this contract is performed.

EQUAL EMPLOYMENT OPPORTUNITY REQUIREMENTS – STATE

G. Review, at least annually, the Contractor's equal employment opportunity policy and affirmative action obligations under this requirement with all employees having any responsibility for hiring, assignment, layoff, termination, or other employment decision, including specific review of these items with on-site supervisory personnel such as superintendents, general forepersons, etc., prior to the initiation of work at any job site. A written record shall be made and maintained identifying the time and place of these meetings, persons attending, subject matter discussed, and disposition of the subject matter.

H. Disseminate the Contractor's equal employment opportunity policy externally by including it in any advertising in the news media, specifically including minority and female news media, and providing written notification to, and discussing the Contractor's equal employment opportunity policy with, other Contractors and subcontractors with whom the Contractor does or anticipates doing business.

I. Direct its recruitment efforts, both oral and written, to minority, female, and community organizations, to schools with minority and female students, and to minority and female students, and to minority and female recruitment and training organizations serving the Contractor's recruitment area and employment needs. Not later than one month prior to the date for the acceptance of applications for apprenticeship or other training by any recruitment source, the Contractor shall send written notification to organizations such as the above describing the openings, screening procedures, and tests to be used in the selection process.

J. Encourage present minority and female employees to recruit other minority persons and women and, where reasonable, provide after school, summer, and vacation employment to minority and female youth both on the site and in other areas of the Contractor's workforce.

K. State in all solicitations or advertisements for employees placed by or on behalf of the Contractor that all qualified applicants will receive consideration for employment without regard to race, color, religion, sex, national origin, age, disability, or marital status.

L. Conduct, at least annually, an inventory and evaluation of all minority and female personnel for promotional opportunities and encourage these employees to seek or to prepare for such opportunities through appropriate training or other similar activities.

M. Ensure that seniority practices, job classifications, work assignments, and other personnel practices do not have a discriminatory effect by continually monitoring all personnel and employment related activities to ensure that the equal employment opportunity policy and the Contractor's obligations under this requirement are being carried out.

N. Ensure that all facilities and company activities are non-segregated except that separate or single-user toilet and necessary changing facilities shall be provided to assure privacy between the sexes.

O. Send to each labor union or representative of workers with which the Contractor has a collective bargaining agreement or other contract or understanding, a notice advising the said labor union or workers' representative of the Contractor's commitments under this requirement and post copies of the notice in conspicuous places available to employees and applicants for employment.

P. Conduct a review, at least annually, of all supervisors' adherence to, and performance under, the Contractor's equal employment opportunity policies and affirmative action obligations.

EQUAL EMPLOYMENT OPPORTUNITY REQUIREMENTS – STATE

7. **CONTRACTOR ASSOCIATIONS –** Contractors are encouraged to participate in voluntary associations which assist in fulfilling one or more of their affirmative actions obligations. The efforts of a Contractor association**,** joint Contractor union, Contractor community, or other similar group of which the Contractor is a member and participant, may be asserted as fulfilling one or more of its obligations under this requirement provided that the Contractor actively participates in the group, makes every effort to ensure that the group has a positive impact on the employment of minorities and women in the industry, ensures that the concrete benefits of the program are reflected in the Contractor's minority and female workforce participation, makes a good faith effort to meet its individual goals, and can provide access to documentation which demonstrates the effectiveness of actions taken on behalf of the Contractor. The obligation to comply, however, is the Contractor's and failure of such a group to fulfill an obligation shall not be a defense for the Contractor's non-compliance.

8. **TRANSFER OF MINORITY OR FEMALE EMPLOYEES –** Through implementing the affirmative action's set forth above and the Contractor's other efforts to ensure equal employment opportunity, the Contractor must have made a commitment to employ minorities and women throughout the life of the contract. The transfer of minority or female employees or trainees from Contractor to Contractor or from project to project for the sole purpose of meeting the Contractor's goals shall be violation of the contract.

9. **CREDITING NON-WORKING TRAINING HOURS TOWARD EMPLOYMRNT GOALS –** In order for the non-working training hours of apprentices and trainees to be counted in meeting the goals, such apprentices and trainees must be employed by the Contractor during the training period, and the Contractor must have made a commitment to employ the apprentices and trainees at the completion of their training, subject to the availability of employment opportunities. Trainees must be trained pursuant to training programs approved by the United States Department of Labor, the New York State Department of Labor or the New York State Thruway Authority and appropriate for utilization on the New York State Thruway Authority projects.

10. **REQUIRED RECORDS**

    A. The Contractor shall designate a responsible official to monitor all employment related activity to ensure that the Contractor's equal employment opportunity policy is being carried out and to keep records. The records shall include the names, address, telephone number, construction trade, union affiliation, if any, employee identification number when assigned, social security number, race, sex, status (e.g. mechanic, apprentice, trainee, helper or laborer), dates of changes in status, hours worked per week in the indicated trade, rate of pay and locations at which the work was performed for each employee. Records shall be maintained in an understandable and retrievable form. To the extent that records kept by the Contractor for other purposes satisfy the requirements of this paragraph, the Contractor need not maintain separate records.

    B. The Contractor shall submit on a monthly basis "Employment Utilization Report" (TA-W1017-9) to the Engineer and the Compliance Unit. Records of the total employee utilization from the start of the contract up to and including the month being reported shall be submitted on these monthly reports. For the purpose of these reports, the hours of female employment and training and the hours of minority employment and training shall be separately calculated. All females, whether minority or non-minority, shall be calculated within the hours of female employment and minority females shall not be used in the calculation of hours of minority employment.

    C. For the purpose of the reports required above, the employment and training hours worked by each person may only be used once in any one month and the Contractor is cautioned that it may not discriminate against minority females in connection with attaining its affirmative action goals under these requirements.

EQUAL EMPLOYMENT OPPORTUNITY REQUIREMENTS – STATE

D. All records required by this Section must be retained for a period of three years following completion of the contract work and shall be available at reasonable times and places for inspection by authorized representatives of the Authority or the Compliance Unit.

11. **GOALS NOT TO BE USED TO DISCRIMINATE –** The Contractor shall not use the goals or affirmative action requirements to discriminate against any person because of race, color, religion, sex, national origin, age disability, or marital status.

12. **NEW YORK STATE DEPARTMENT OF ECONOMIC DEVELOPMENT DIVISION OF MINORITY AND WOMEN'S BUSINESS DEVELOPMENT –** The Contractor will comply with any procedures and guidelines established by the Director of the Office of Contract Compliance and Minority and Women-Owned Business Enterprise (hereinafter the Director of the Office of the Office of Contract Compliance) under the authority of New York State Governor's Executive Order 21, issued August 3, 1983 (hereinafter Executive Order 21) and will comply with any rules, regulations and orders of the Executive Director as may be promulgated pursuant to or under the authority of Executive Order 21, or other applicable law or order.

13. **AVAILABILITY OF CONTRACTOR'S RECORDS –** The Contractor will furnish all information and reports as may be required by the Director of the Office of Contract Compliance under the authority of Executive Order 21, or by rules, regulations and orders of the Executive Director as may be promulgated under or pursuant to Executive Order 21, and will permit access to its books, records and accounts by the Authority or the Compliance Unit for purposes of investigating compliance with these requirements and such rules, regulations, orders, procedures and guidelines.

14. **ENFORCEMENT –** In order to determine whether the Contractor has complied with the requirements, the Authority may proceed by order to show cause, compliance conference, hearing or any other lawful procedure upon due notice in writing to the Contractor. In the event the Authority finds that the Contractor has filed to comply with these requirements, this contract may be canceled, terminated, or suspended in whole or in part in accordance with the procedures authorized in Section 312 of Executive Law 15-A, Section 102-17 of the New York State Standard Construction Specifications and Section 40 of the Highway Law, and the Contractor may be declared ineligible for further New York State government contract or construction contracts, and such other sanctions may be imposed and remedies invoked as provided under the authority of Executive Order 21 or by rule, regulation, or order of the Executive Director, or as otherwise provided by law.

15. **CONTRACTOR'S RESPONSIBILITY REGARDING COLLECTIVE BARGAINING AGREEMENT–** Neither the provisions of any collective bargaining agreement, nor the failure by a union with whom the Contractor has a collective bargaining agreement to refer either minorities or women shall excuse the Contractor's obligations under these requirements, any rules, regulations, procedures and guidelines promulgated or established pursuant to Executive Order 21.

16. **APPLICABILITY TO SUBCONTRACT –** As per Section 312 of Executive Law 15-A the Contractor will physically include this document, Equal Employment Opportunity Requirements, as part of every subcontract or purchase order unless exempted by rules, regulations, or orders of the Executive Director, pursuant to Executive Order 21, and such requirements shall be binding upon each subcontractor, service provider, or vendor. The Contractor will take such action with respect to any subcontract or purchase order as the Authority may direct as a means of enforcing such provisions, including sanctions for noncompliance; PROVIDED, HOWEVER, that in the event the Contractor becomes involved in or is threatened with litigation with a subcontractor or vendor as a result of any provision or direction issued pursuant to these requirements or by the Authority, the Contractor may request the State of New York to enter into such litigation or dispute to protect the interests of the State of New York.

EQUAL EMPLOYMENT OPPORTUNITY REQUIREMENTS – STATE

17. **EQUAL EMPLOYMENT OPPORTUNITY OFFICER –** The Contractor will designate and make known to the Department of Equal Employment Opportunity Officer (EEO Officer) who will have the responsibility for and must be capable of effectively administering and promoting an active Contractor program of equal employment opportunity and who must be assigned adequate authority and responsibility to do so.

18. **COMPLAINTS OF ALLEGED DISCRIMINATION/SEXUAL HARASSMENT –** The Contractor will promptly investigate all complaints of alleged discrimination/sexual harassment made to the Contractor in connection with his/her obligations under this contract, will attempt to resolve such complaints, and will take appropriate corrective action within a reasonable time. If the investigation indicates that the discrimination/sexual harassment may affect persons other that the complainant, such corrective action shall include such other persons. Upon completion of each investigation, the Contractor will inform every complainant of all of his or her avenues of appeal. (Division of Human Rights, Equal Employment Opportunity Commission).

    The Contractor shall inform the Compliance Unit (within 24 hours) in writing of any formal or informal, complaint, incident or any issue of discrimination/sexual harassment. Results of investigation must be submitted to the Compliance Unit within ten (10) days of the complaint.

EMPLOYMENT GOALS FOR MINORITY AND WOMEN PARTICIPATION BY COUNTY

COUNTY	MINORITY %	WOMEN %
Albany	6.56	4.67
Alleghany	1.00	5.08
Bronx	56.41	4.72
Broome	4.15	6.24
Cattaraugus	5.00	3.76
Cayuga	1.38	4.47
Chautauqua	3.47	4.83
Chemung	3.44	4.96
Chenango	2.07	6.67
Clinton	1.22	5.63
Columbia	3.81	3.16
Cortland	2.05	6.89
Delaware	2.36	5.59
Dutchess	7.63	3.24
Erie	9.66	3.32
Essex	0.33	5.33
Franklin	6.77	5.69
Fulton	1.00	4.07
Genesee	5.47	5.18
Green	2.88	4.09
Hamilton	0.76	6.11
Herkimer	1.00	4.22
Jefferson	2.12	3.65
Kings	56.41	4.72
Lewis	0.87	4.82
Livingston	1.54	4.14
Madison	1.52	4.52
Monroe	14.20	5.81
Montgomery	2.39	3.74
Nassau	16.09	3.24
New York	56.41	4.72

EQUAL EMPLOYMENT OPPORTUNITY REQUIREMENTS – STATE

EMPLOYMENT GOALS FOR MINORITY AND WOMEN PARTICIPATION BY COUNTY

COUNTY	MINORITY %	WOMEN %
Niagara	6.00	4.12
Oneida	3.75	3.98
Onondaga	8.27	5.36
Ontario	1.62	3.79
Orange	10.00	3.46
Orleans	5.74	4.14
Oswego	1.25	4.03
Otsego	0.86	4.91
Putnam	2.42	2.79
Queens	56.41	4.72
Rensselaer	3.46	3.01
Richmond	12.81	2.46
Rockland	18.37	3.80
St. Lawrence	1.78	4.86
Saratoga	1.10	5.25
Schenectady	6.05	2.85
Schoharie	1.36	2.99
Schuyler	0.49	4.67
Seneca	2.22	5.45
Steuben	1.39	4.84
Suffolk	11.73	4.10
Sullivan	8.16	3.60
Tioga	0.53	8.90
Tompkins	4.19	4.99
Ulster	5.93	4.29
Warren	2.13	3.41
Washington	1.91	3.56
Wayne	3.66	4.77
Westchester	24.50	3.38
Wyoming	0.33	4.30
Yates	1.67	2.68

TRAINING SPECIAL PROVISIONS – STATE FUNDED

This work shall consist of the employment and meaningful and effective training of minority and women in NYS Thruway Authority approved training programs leading to their qualification as journeyworkers in the skilled trades required in highway construction. This Training Special Provision supplements the Equal Employment Opportunity requirements included elsewhere in this Proposal entitled "Equal Employment Opportunity (EEO) Requirements". Each of the fore-going prescribed specific percentage goals for utilization of minorities and women in the performance of work for the geographic location of the contract.

GENERAL: The primary objective of this Training Special Provision is to provide training opportunities to minorities and women in construction trades for two purposes:

1. To maintain a pool of qualified minorities and women to replace those journeyworkers who, in the natural course of events, will leave the workforce; and

2. To provide minorities and women as indentured apprentices or trainees in those geographic areas where shortages in minorities and women journeyworkers are recognized because of the Contractor's inability to meet the EEO goals set fourth in this contract.

Each contract which contains this Training Special Provision shall require the training of at least one minority or woman indentured apprentice or trainee. Such individual shall be approved by the Authority. Other then this initial training obligation, to be undertaken and provided by the Contractor, no additional training obligations will exist under this Training Special Provision unless the goals for minority and women employment and training in the skilled workforce (exclusive of laborers) are not continuously met on the contract and generally distributed amongst the trades. In the five counties of New York City, the goals specified for each trade are applicable and must be met. Whenever the goals are not met, additional minorities and/or women indentured apprentices and/or trainees will be assigned or approved in numbers necessary to meet the goals. Data necessary to determine if goals are being met will be provided on Contractor and Subcontractor Employment Utilization Reports (Form TA-1017-9). The data will be verified by the visual observance of the Project Engineer, or designated project inspectors, and hours of employment reported on Contractor or Subcontractor certified weekly payrolls.

The number of minorities and women indentured apprentices and trainees required to be trained under this item shall not exceed 12% of the total journeyworker workforce on the contract, i.e. no more than 1 in of the skilled workforce is required to be a minority or woman indentured apprentice or trainee. This limitation applies regardless of minority and women representation in the trades. However, this limit on required training in no way absolves the Contractor of the responsibility to comply with the EEO requirements.

PRE-AWARD MEETING: Before the Contractor will be allowed to begin work, the Contractor shall attend a Pre-award Meeting and shall submit for Authority use and acceptance, a Workforce and Training Utilization Schedule (TA-1024) which shall be correlated to the Contractor's contract work schedule. The Schedule shall include at least the following information:

1. A work schedule for the entire contract,

2. An estimate of the work force required to conform to the work schedule on a monthly basis including an estimate of the workforce in each trade and/or work classification projected to be used including Subcontractors,

3. Separate estimates of the number of minorities and women indentured apprentices or trainees that would be required in each skilled trade to meet the contract EEO employment goals for that trade assuming no minorities or women journeyworkers in the workforce,

4. The proposed training programs to be used and the starting dates for training in each trade and/or work classification,

5. An estimate of the availability of minorities and women journeyworkers in numbers sufficient to meet the EEO contract goals, and

6. Any proposal by the Contractor to use trainees or indentured apprentices to make up for anticipated EEO goal shortfalls. Such proposals shall include the name and craft of any individual proposed by the Contractor as the required trainee or indentured apprentice. In the case of an indentured apprentice, evidence of indentureship and registration of the approved apprenticeship program must be included.

No contract work may be undertaken until the Authority has accepted the Schedule. The Contractor shall submit a revised Workforce and Training Utilization Schedule at such times as major changes in the contract work schedule occur which substantially affect the previously submitted schedule.

RECRUITMENT: Although the training requirements of this Training Special Provision are not intended, and shall not be used to discriminate against any applicant for training, whether a member of a protected class or not, it is recognized that non-minority males have traditionally been and continue to be trained, either formally or on-the-job in an informal manner, for work in the trades utilized in construction work. Therefore, until such time that representative numbers of minorities and women complete training and their utilization as journeyworkers is demonstrated to the extent of the participation goals as set forth in the Authority's construction contract, training required under this Training Special Provisions will be primarily limited to minorities and women. Thus, the Contractor shall demonstrate compliance with the intent of this Training Special Provision by affording the Authority the opportunity to:

1. First, approve the use of a minority or woman indentured apprentice known to the Contractor through an existing Joint Apprenticeship Training program, or

2. Second, provide a partially trained minority or woman trainee who is currently enrolled in a New York State Department of Labor approved training program, or

3. Third, work cooperatively with the Contractor in recruitment of new minorities or women trainees, when needed.

In conformance with the foregoing, the Authority's Form TA-1018(Request for Personnel), should be submitted to the Authority's Affirmative Action Administrator identified to the Contractor at the Preconstruction Meeting. The Contractor shall allow reasonable time for the Authority's Compliance Specialist to ensure on-the-job orientation for approved apprentices or assigned trainees within their first month of employment.

WORK HISTORY: No individual shall be employed as a trainee in any trade and/or work classification in which such person has successfully completed a training course providing journeyworker status in the same trade or work classification, or in which such person has been gainfully employed as a journeyworker by virtue of informal on-the-job training. Detection of individuals in the above categories may be accomplished by including appropriate questions on employee application forms, inquiries to the Authority's Compliance Specialist, checking personal references, or by other suitable means. Regardless of the method used, the Contractor shall document the finding for each indentured apprentice or trainee provided training under this requirement. A copy of the finding shall be given to the Authority's Compliance Specialist. In the case of indentured apprentices, evidence of indentureship in a registered approved apprenticeship program shall also be submitted.

SUBCONTRACTING: In the event the Contractor subcontracts a portion of the contract work, the Contractor shall ensure the requirements of this Training Special Provision are physically incorporated in such subcontracts to ensure the workforce utilization by the Subcontractor meets the goals for minorities and women employment and training, either independently or in combination with the prime Contractor's workforce. The Contractor must determine the hours of training, if any, and in which trade or work classification, minorities or women indentured apprentices or trainees are to be trained by the Subcontractor(s). However, the Contractor shall retain the primary responsibility for meeting the training requirements of this Training Special Provision. Subcontractors are herewith advised that disregard of these requirements may result in the Authority either rescinding approval of or disapproving their use on subsequent Authority contracts.

TRAINING PROGRAMS: The minimum length, type of training, and rate of pay for the trade or the work classification of the trade will be specified in the training program approved or sanctioned by the New York State Department of Labor.

Where training is to be provided under this Training Special Provision, the Contractor shall obtain acceptance or approval of the training program to be used, and the starting time for training, prior to commencing training. The Contractor shall provide on-the-job training directed toward developing journeyworkers in the trade, or work classification(s) of the trade, involved. To the extent the work involved on the contract permits, such training should include all phases and facets of a trade, or work classification of a trade, to satisfy usual construction industry requirements for continued or future employment therein.

It is the intent of this Training Special Provision that training will be provided in construction trades rather than clerical type positions. Training may be permitted, in unique circumstances, in lower level management positions such as office engineers, where the training is oriented toward construction related activities. Some off-site training is permissible as long as the training is an integral part of an approved training program and does not comprise a significant part of an overall training program. Both off-site and lower level management training are subject to the Authority's approval.

TRAINEE WAGES: An employee on any New York State Public Works Contract must be paid the full journeyperson prevailing wage unless such employee is individually registered in an approved and registered New York State Department of Labor Apprenticeship Program.

It is the responsibility of the Contractor to ascertain the status of any employee utilized to satisfy the trainee requirements under this contract, and to ensure that all New York State Department of Labor apprenticeship requirements are met.

Apprentices shall be paid fringe benefits in accordance with the provisions of the apprenticeship program. If the apprenticeship program does not specify fringe benefits, apprentices must be paid the full amount of fringe benefits listed on the wage determination for the applicable classification. Trainees shall be paid fringe benefits in accordance with the provisions of the trainee program. If the trainee program does not mention fringe benefits, trainees shall be paid the full amount of fringe benefits listed on the wage determination unless the Administrator of the Wage and Hour Division determines that there is an apprenticeship program associated with the corresponding journeyworker wage rate on the wage determination which provides for less than full benefits for apprentices.

DURATION OF TRAINING: Once an indentured apprentice is approved or a trainee is assigned to the contract under the Training Special Provision, that individual shall be trained in the designed trade throughout the duration of the contract whenever such trade is in use on the contract until the trainee or apprentice has completed the approved training program. Where training is provided under a multiphase apprenticeship or training program, it is expected that training will be provided continually through all phases to the extent that opportunities for such training exist in the work under contract. Upon satisfactory completion of a phase of training under a multiphase training program, if further appropriate and required training is not available and work in the work classification of the completed phase is available, the minority or woman indentured apprentice or trainee shall continue employment, and be compensated at the prevailing journeyworker wage rate for such work. Hours of employment as a journeyworker described above will not be credited toward training hours required by the approved training or apprenticeship program.

If an indentured apprentice or trainee is terminated before completion of the contract for any reason other than seasonal lay-off or completion of work in that trade, the Contractor shall hold a counseling session with the Authority's Compliance Specialist and the individual to explain the reasons for termination. Documentation that the counseling session was held and the reasons for termination shall be given to the Authority's Compliance Specialist.

REQUIRED RECORDS: The Contractor shall provide each minority or woman trained under this provision with a certification showing the type and length of training satisfactorily completed. In addition, the Contractor shall keep records on the job sit indicating the nature and hours of training provided to each trainee or indentured apprentice and furnish weekly reports documenting performance under this Training Special Provision to the Project Engineer.

No measurement will be made of training provided to indentured apprentices or trainees for whom no work history has been provided to the Project Engineer. In addition, no measurement will be made of training provided to apprentices for whom no evidence of indentureship in a registered apprenticeship program has been provided to the Project Engineer.

NO PAYMENT FOR TRAINING: No payment will be made for the training required of the Contractor under this Training Special Provision. The required training is labor cost which is included in the lump sum bid by the Contractor for the items of work comprising the contract.

(1) Journeyworker means a person who is capable of performing all the duties within a trade or a given work classification of a trade.

TRAINEE/APPRENTICESHIP NOTICE

Notwithstanding any of the provisions under the contract section entitled TRAINING SPECIAL PROVISION, especially subsections entitled Training Programs and Trainee Wages, dealing with approved and/or sanctioned programs and graduated percentage wages, the Contractor is advised that all requirements for Apprenticeships (including all manner and form of traineeships and skill programs) are under the exclusive jurisdiction of the New York State Department of Labor, Job Service and Training Division, Albany Apprentice Training Central Office, Bldg. 12, Room 586, State Office Building Campus, Albany, NY 12240.

An employee on any New York State Public Works Contract must be paid the full, journeyperson prevailing wage unless such employee is individually registered in an approved and registered NYS Department of Labor Apprenticeship Program.

This law is applicable even on Federal-aided contracts as long as any State money is involved, and even if an employee might otherwise be acceptable as a trainee in an approved and sanctioned New York State Department of Transportation and/or Federal Highway Administration training program.

It is the responsibility of the Contractor to ascertain the status of any employee utilized to satisfy the trainee requirements under this contract, and to ensure that all New York State Department of Labor Apprenticeship requirements are met.

It is the responsibility of the Contractor to ascertain the status of any employee utilized to satisfy the trainee requirements under this contract, and to ensure that all New York State Department of Labor Apprenticeship requirements are met.

Unless such employees are individually registered in a New York State Department of Labor approved and registered Apprenticeship Program, they must be paid the full, prevailing journeyperson wage, not the graduated, trainee wage set forth in the section TRAINING SPECIAL PROVISIONS of the contract.

NON-FA AFFIRMATIVE ACTION REQUIREMENTS

Special Equal Employment Opportunity Responsibilities

1. GENERAL

a. Equal employment opportunity requirements that take affirmative action to assure equal employment opportunity as required by Executive Order 11246 and Executive Order 11375 are set forth in Required Contract Provisions (Form PR-1273 or PR-1316, as appropriate) and these Special Provisions which are imposed pursuant to Section 140 of Title 23, U.S.C., as established by Section 22 of the Federal-Aid Highway Act of 1968. The requirements set forth in these Special Provisions shall constitute the specific affirmative action requirements for project activities under this contract and supplement the equal employment opportunity requirements set forth in the Required Contract Provisions.

b. The Contractor will work with the New York State Thruway Authority, New York State Department of Transportation and the Federal Government in carrying out equal employment opportunity obligations and in their review of his/her activities under the contract.

2. EQUAL EMPLOYMENT OPPORTUNITY POLICY

The Contractor will accept as operating policy the following statement which is designed to further the provision of equal opportunity to all persons without regard to their race, color, religion, sex, or national origin, and to promote the full realization of equal employment opportunity through a positive continuing program.

It is the policy of this Company to assure that applicants are employed, and that employees are treated during employment, without regard to their race, religion, sex, color, or national origin. Such action shall include: employment, upgrading, demotion, or transfer; recruitment or recruitment advertising; layoff or termination; rates of pay or other forms of compensation; and selection for training, including apprenticeship, pre-apprenticeship and/or on-the-job training.

3. EQUAL EMPLOYMENT OPPORTUNITY OFFICER

The Contractor will designate and make known to the New York State Thruway Authority contracting officers an Equal Employment Opportunity Officer (hereinafter referred to as the EEO Officer) who will have the responsibility for and must be capable of effectively administering and promoting an active Contractor program of equal employment opportunity and who must be assigned adequate authority and responsibility to do so.

4. DISSEMINATION OF POLICY

a. All members of the Contractor's staff who are authorized to hire, supervise, promote and discharge employees, or who recommend such action, or who are substantially involved in such action, will be made fully cognizant of, and will implement, the Contractor's equal employment opportunity policy and contractual responsibilities to provide equal employment opportunity in each grade and classification of employment. To insure that the above agreement will be met, the following actions will be taken as a minimum:

(1) Periodic meetings of supervisory and personnel office employees will be conducted before the start of work and then not less than once every six months, at which time the Contractor's equal employment opportunity policy and its implementation will be reviewed and explained. The meetings will be conducted by the EEO Officer or other knowledgeable company official.

NON-FA AFFIRMATIVE ACTION REQUIREMENTS

(2) All new supervisory or personnel office employees will be given a thorough indoctrination by the EEO Officer or other knowledgeable company official covering all major aspects of the Contractor's equal employment opportunity obligations within thirty days following their reporting for duty with the Contractor.

(3) All personnel who are engaged in direct recruitment for the project will be instructed by the EEO Officer or appropriate company official in the Contractor's procedures for locating and hiring minority group employees.

b. In order to make the Contractor's equal employment opportunity policy known to all employees, prospective employees and potential sources of employees, i.e., schools, employment agencies, labor units (where appropriate), college placement officers, etc., the Contractor will take the following actions:

(1) Notices and posters setting forth the Contractor's equal employment opportunity policy will be placed in areas readily accessible to employees, applicants for employment and potential employees.

(2) The Contractor's equal employment opportunity policy and the procedures to implement such policy will be brought to the attention of employees by means of meetings, employee handbooks, or other appropriate means.

5. RECRUITMENT

a. When advertising for employees, the Contractor will include in all advertisements for employees the notation: "An Equal Opportunity Employer." All such advertisements will be published in newspapers or other publications having a large circulation among minority groups in the area from which the project work force would normally be derived.

b. The Contractor will, unless precluded by a valid bargaining agreement, conduct systematic and direct recruitment through public and private employee referral sources likely to yield qualified minority group applicants, including, but not limited to, State employment agencies, schools, colleges and minority group organizations. To meet this requirement, the Contractor's EEO Officer will identify sources of potential minority group employees, and establish with such identified sources procedures whereby minority group applicants may be referred to the Contractor for employment consideration.

In the event the Contractor has a valid bargaining agreement providing for exclusive hiring hall referrals, the Contractor is expected to observe the provisions of that agreement to the extent that the system permits the Contractor's compliance with equal employment opportunity contract provisions. (The U.S. Department of Labor has held that where implementation of such agreements have the effect of discriminating against minorities or women, or obligates the Contractor to do the same, such implementation violates Executive Order 11246, as amended.)

c. The Contractor will encourage present employees to refer minority group applicants for employment by posting appropriate notices or bulletins in areas accessible to all such employees. In addition, information and procedures with regard to referring minority group applicants will be discussed with employees.

NON-FA AFFIRMATIVE ACTION REQUIREMENTS

6. PERSONNEL ACTIONS

Wages, working conditions, and employee benefits shall be established and administered, and personnel actions of every type, including hiring, upgrading, promotion, transfer, demotion, layoff, and termination, shall be taken without regard to race, color, religion, sex, or national origin. The following procedures shall be followed:

a. The Contractor will conduct periodic inspections of project sites to insure that working conditions and employee facilities do not indicate discriminatory treatment of project site personnel.

b. The Contractor will periodically evaluate the spread of wages paid within each classification to determine any evidence of discriminatory practices.

c. The Contractor will periodically review selected personnel actions in depth to determine whether there is evidence of discrimination. When evidence is found, the Contractor will promptly take corrective action. If the review indicates that the discrimination may extend beyond the actions reviewed, such corrective action shall include all affected persons.

d. The Contractor will promptly investigate all complaints of alleged discrimination made to the Contractor in connection with obligations under this contract, will attempt to resolve such complaints, and will take appropriate corrective action within a reasonable time. If the investigation indicates that the discrimination may affect persons other than the complainant, such corrective action shall include such other persons. Upon completion of each investigation, the Contractor will inform every complainant of all of his/her avenues of appeal.

7. TRAINING AND PROMOTION

a. The Contractor will assist in locating, qualifying and increasing the skills of minority group and women employees, and applicants for employment.

b. Consistent with the Contractor's work force requirements and as permissible under Federal and State regulations, the Contractor shall make full use of training programs; i.e., apprenticeship and on-the-job training programs for the geographical area of contract performance. Where feasible, 25 percent of apprentices or trainees in each occupation shall be in their first year of apprenticeship or training. In the event the Training Special Provision is provided under this contract, this subparagraph is superseded thereby.

c. The Contractor will advise employees and applicants for employment of available training programs and entrance requirements for each.

d. The Contractor will periodically review the training and promotion potential of minority groups and women employees and will encourage eligible employees to apply for such training and promotion.

8. UNIONS

If the Contractor relies in whole or in part upon unions as a source of employees, the Contractor will use his/her best efforts to obtain the cooperation of such unions to increase opportunities for minority groups and women within the unions, and to effect referrals by such unions of minority and female employees. Actions by the Contractor, either directly or through a Contractor's association acting as agent, will include the procedures set forth below:

NON-FA AFFIRMATIVE ACTION REQUIREMENTS

a. The Contractor will use his/her best efforts to develop, in cooperation with the unions, joint training programs aimed toward qualifying more minority group members and women for membership in the unions and increasing the skills of minority group employees and women so that they may qualify for higher paying employment.

b. The Contractor will use his/her best efforts to incorporate an equal employment opportunity clause into each union agreement to the end that such union will be contractually bound to refer applicants without regard to their race, color, religion, sex or national origin.

c. The Contractor is to obtain information as to the referral practices and policies of the labor union except that to the extent such information is within the exclusive possession of the labor union or such labor union refuses to furnish such information to the Contractor, the Contractor shall so certify to the New York State Thruway Authority and shall set forth what efforts have been made to obtain such information.

d. In the event the union is unable to provide the Contractor with a reasonable flow of minority and women referrals within the time limit set forth in the collective bargaining agreement, the Contractor will, through independent recruitment efforts, fill the employment vacancies without regard to race, color, religion, sex, or national origin, making full efforts to obtain qualified and/or qualifiable minority group persons and women. (The U.S. Department of Labor has held that it shall be no excuse that the union with which the Contractor has a collective bargaining agreement providing for exclusive referral failed to refer minority employees.) In the event the union referral practice prevents the Contractor from meeting the obligations pursuant to Executive Order 11246, as amended, and these special provisions, such Contractor shall immediately notify the New York State Thruway Authority.

9. SUBCONTRACTING

a. The Contractor will use his/her best efforts to solicit bids from and to utilize minority group subcontractors or subcontractors with meaningful minority group and female representation among their employees. Contractors shall obtain lists of minority-owned construction firms from Empire State Development, Division of Minority and Women Business Development.

b. The Contractor will use his/her best efforts to ensure Subcontractor compliance with their equal employment opportunity obligations.

10. RECORDS AND REPORTS

a. The Contractor will keep such records as are necessary to determine compliance with the Contractor's equal employment opportunity obligations. The records kept by the Contractor will be designed to indicate:

(1) The number of minority and non-minority group members and women employed in each work classification on the project.

(2) The progress and efforts being made in cooperation with unions to increase employment opportunities for minorities and women (applicable only to Contractors who rely in whole or in part on unions as a source of their work force).

(3) The progress and efforts being made in locating, hiring, training, qualifying, and upgrading minority and female employees.

NON-FA AFFIRMATIVE ACTION REQUIREMENTS

(4) The progress and efforts being made in securing the services of minority group Subcontractors with meaningful minority and female representation among their employees.

b. All such records must be retained for a period of three years following completion of the contract work and shall be available at reasonable times and places for inspection by authorized representatives of the New York State Thruway Authority, New York State Department of Transportation and the Federal Highway Administration.

c. The Contractor will submit to the New York State Thruway Authority, a monthly report for the first three months after construction begins, thereafter upon request, and each month of July for the duration of the project indicating the number of minority, women and non-minority group employees currently engaged in each work classification required by the contract work. This information is to be reported on Form PR-1391, Federal-Aid Highway Construction Contractor's Monthly EEO Report. If on-the-job training is being required by "Training Special Provisions," the Contractor will be required to furnish Form FHWA-1409, Federal-Aid Highway Construction Contractor's Quarterly Training Report.

PROGRESS PAYMENTS - OEOC REPORTS

Processing of progress payments is contingent upon Contractor documentation of compliance with **all** contract requirements, including EEO/MWBE Program (Equal Employment Opportunity/Minority and Women Business Enterprise Program) reports, in accordance with the brochure entitled "Minority and Women Business Enterprise Program, Information on Completing Program Reports", which is sent to all low bidders by the NYSTA Office of Contracts and Construction Management.

Forms listed below may be required and shall cover the period since the last reporting period. Specific forms and schedule will be stipulated at the EEO/MWBE Program pre-award meeting.

TA-W1017-9	Monthly Employment Utilization
TA-W1023-9	Payments to D/M/WBE Subcontracting Firms
TA-W1046-9	Weekly Training Progress Report

In addition, the following shall reflect up-to-date status:

TA-W1022-9	Utilization Plan for All Subcontractors
TA-W1024-9	Workforce and Training Utilization Schedule
TA-W1041-9	Training Report
TA-W1064-9	Construction Contractors Annual EEO Report

TA-W1022-9 (02/2016)

New York State Thruway Authority • New York State Canal Corporation
Office of Construction Management - Compliance Unit
P.O. Box 189
Albany, NY 12201-0189

UTILIZATION PLAN FOR ALL SUBCONTRACTORS

Purpose: This form is completed by the contractor for the utilization of all subcontractors, suppliers and trucking firms.

INSTRUCTIONS: Complete form and submit within 10 days after bid opening.

Contractor Name and Address	Federal ID No.	Contract Numbers TA No. D No.

List all Subcontractors, Suppliers and Trucking Firms	Certification Status	Submission	Items of Work, Services, or Supplies to be Provided	Agreement Amount
Name Address Phone No. Federal ID No.				$
Name Address Phone No. Federal ID No.				$
Name Address Phone No. Federal ID No.				$
Name Address Phone No. Federal ID No.				$
Name Address Phone No. Federal ID No.				$
Name Address Phone No. Federal ID No.				$

Prepared by:		
Signature	Phone No.	Sub Total From Page 2 $
Title	Date Submitted	Grand Total $

TA-W1022-9 (02/2016)

UTILIZATION PLAN FOR ALL SUBCONTRACTORS

Page _____ of _____

List all Subcontractors, Suppliers and Trucking Firms	Certification Status	Submission	Items of Work, Services or Supplies to be Provided	Agreement Amount
Name Address Phone No. Federal ID No.				$
Name Address Phone No. Federal ID No.				$
Name Address Phone No. Federal ID No.				$
Name Address Phone No. Federal ID No.				$
Name Address Phone No. Federal ID No.				$
Name Address Phone No. Federal ID No.				$
Name Address Phone No. Federal ID No.				$
Name Address Phone No. Federal ID No.				$
Compliance Unit Comments:				Sub Total $

INSTRUCTIONS FOR THE MANUAL COMPLETION OF THE EMPLOYMENT UTILIZATION REPORT – TA-1017-9

PURPOSE

The Employment Utilization Report is prepared by contractors and subcontractors to document their performance in attempting to meet the goals for equal employment opportunity included in the contract. The report covers all hourly workers, including crew chiefs, assigned to the construction project; it does not cover salaried personnel such as superintendents. The completed reports are used by the Thruway to monitor the contractor's and subcontractor's compliance with the contract's equal employment opportunity requirements.

SUBMISSION

The Employment Utilization Report is to be completed by both prime and subcontractors and signed by the designated EEO Officer or authorized representative of the Contractor or Subcontractors. The prime contractor shall: complete a report for its own workforce, and prepare a summary report for the entire combined contract workforce. All the reports are to be submitted to the Engineer-In-Charge (EIC) each calendar month during the term of the contract. They shall include the total work hours for all employees in each trade or work category for all payrolls completed in the entire reporting period. This report is required by Article 15-A of the Executive Law of New York State Section 312, and 23 U.S.C., Section 140(a).

GENERAL

1. Check YES or NO as appropriate to indicate whether or not this particular TA-1017-9 filing will be your last TA-1017-9 filing for the entire contract.
2. Contract Number
3. Name of County or Counties in which the contract is located.
4. Enter Zip Code
5. Minority and Female Goals for the County of the project address from the contract EEO requirements.
6. The Month and Year covered by the report.
7. Prime Contractor's Name and Federal Employer Identification Number, only if form is being completed by the Contractor.
8. Date Work Began: Enter the month and year work began on this contract.
9. Work Completed to Date: Estimate the percent of contract work completed at this time.

JOB OR TRADE CATEGORIES

There are 9 standard job or trade categories printed on the TA-1017-9. They include the trades commonly used in highway and bridge construction. These categories are intended to be general in nature and may include several job titles, depending on local custom. (For example, all laborers whether "skilled" or "unskilled" are to be included in the laborer category; journeyworker mechanics employed to operate equipment on the job site such as compressors would be included in the equipment operator category.) In some rare cases, trades other than those identified on the TA-1017-9 may be required to perform the contract work; for example a plumber might be utilized in the construction of a rest area. All work performed by trades other than those printed on the form should be combined in the "Other" category. Work level designations of Journeyworker (J), Apprentice (A), or Trainee (T), are included as separate entries for each standard job category. All entries of hours worked must be recorded opposite the appropriate work level for those categories. No separate identification of work level is required for "other" crafts or job categories. Crew chiefs and other hourly supervisors should be counted as journeyworkers in their appropriate job or trade categories.

WORK HOURS OF EMPLOYMENT (This Reporting Period)

10-14 Report the work hours of employment provided in each Job or Trade category during the reporting month. Include all employment covered by payrolls issued during the reporting month. Unless otherwise noted, the Hours of Employment provided to Males (M) and Females (F) are reported separately. Where separate work designations

are shown for a single trade, i.e., work designations are shown for a single trade, i.e., report these work hours accordingly.

10. Total hours of work for all employees regardless of their ethnicity.
11. Black (not of Hispanic origin): All persons having origins in any of the Black racial groups.
12. Hispanic: All persons of Mexican, Puerto Rican, Dominican, Cuban, Central or South American descent of either Indian or Hispanic origin, regardless of race.
13. Asian or Pacific Islander.
14. Native American or Alaskan Native.
15. Minority Percentage: the sum of all minority male employment for a category divided by the total work force employment for that category, i.e. (11M + 12M + 13M + 14M) + (10M + 10F). Journeyworkers, Apprentices, and Trainees are combined Apprentices, and Trainees are combined when computing this percentage.

16. Female Percentage: the female employment of all employees for a category divided by the total employment of all employees for that category, i.e. (10F) + (10M + 10F). Journeyworkers, Apprentices, and Trainees are combined when computing this percentage.

NUMBER OF EMPLOYEES

17-18 Record the number of people employed during the reporting period. The numbers of Male (M) and Female (F) employees in each column are reported separately.

17. The total number of people employed regardless of ethnicity.
18. The total number of minority persons employed.

TOTAL WORK HOURS OF EMPLOYMENT TO DATE (Cumulative)

This section provides a current total of the employment provided throughout the life of the contract to date. The total employment to date is calculated by adding the work hours of employment reported this period to the previous month's reported total work hours of employment to date.

19. Total hours of work for all employees regardless of their ethnicity (cumulative - include non-minorities minorities).

20-23 The sum of the corresponding entry for EMPLOYMENT THIS REPORTING PERIOD and the previous period's TOTAL WORK HOURS OF EMPLOYMENT TO DATE for each combination of job category, ethnicity, and sex.

24. Minority Percentage = (20M + 21M + 22M + 23M) + (19M + 19F).
25. Female Percentage = (19F) + (19M + 19F)

GRAND TOTAL

26. Enter the cumulative total of each column.

OFFICIAL OF PRIME CONTRACTOR/SUBCONTRACTOR

27. Signature and Title of the company official completing the report.
28. Date signed.

TA-W1017-9
(08/2014)

NEW YORK STATE THRUWAY AUTHORITY • CANAL CORPORATION

OFFICE OF CONSTRUCTION MANAGEMENT COMPLIANCE UNIT
MONTHLY EMPLOYMENT UTILIZATION

1. FINAL REPORT	2. CONTRACT TA #	3.D #	4. COUNTIES
○ YES ◉ NO			

5. CONTRACT GOALS %	MINORITY %	FEMALE %	6. REPORT (MONTH & YEAR) _____ / _____

7. CONTRACTOR NAME	SELECT REPORT TYPE BELOW
	○ PRIME ◉ COMPOSITE ○ SUBCONTRACTOR

8. PROJECT START DATE *(Month & Year)*	_____ / _____	9. Percent of Work Completed to Date:	

WORK HOURS OF EMPLOYMENT THIS MONTH

JOB OR TRADE CATEGORY JOURNEYWORKER, APPRENTICE, OR TRAINEE		10. TOTAL HOURS OF ALL EMPLOYEES BY TRADE (NON-MINORITIES & MINORITIES)		11. BLACK (NOT OF HISPANIC ORIGIN)		12. HISPANIC		13. ASIAN OR PACIFIC ISLANDERS		14. AMERICAN INDIAN OR ALASKAN NATIVE		15 MINORITY %	16. FEMALE %	17. TOTAL NUMBER OF EMPLOYEES		18. TOTAL # OF MINORITY EMPLOYEES	
		M	F	M	F	M	F	M	F	M	F			M	F	M	F
LABORER	J																
	A																
	T																
EQUIPMENT OPERATOR	J																
	A																
	T																
SURVEYOR	J																
	A																
	T																
TRUCK DRIVER	J																
	A																
	T																
IRON WORKER	J																
	A																
	T																
CARPENTER	J																
	A																
	T																
MASON	J																
	A																
	T																
PAINTER	J																
	A																
	T																
ELECTRICIAN	J																
	A																
	T																
OTHER																	
TOTAL																	

TOTAL WORK HOURS OF EMPLOYMENT TO DATE (Cumulative)

JOB OR TRADE CATEGORY JOURNEYWORKER, APPRENTICE, OR TRAINEE		19. TOTAL HOURS OF ALL EMPLOYEES BY TRADE (NON-MINORITIES & MINORITIES)		20. BLACK (NOT OF HISPANIC ORIGIN)		21. HISPANIC		22. ASIAN OR PACIFIC ISLANDERS		23. AMERICAN INDIAN OR ALASKAN NATIVE		24. MINORITY %	25. FEMALE %
		M	F	M	F	M	F	M	F	M	F		
LABORER	J												
	A												
	T												
EQUIPMENT OPERATOR	J												
	A												
	T												
SURVEYOR	J												
	A												
	T												
TRUCK DRIVER	J												
	A												
	T												
IRON WORKER	J												
	A												
	T												
CARPENTER	J												
	A												
	T												
MASON	J												
	A												
	T												
PAINTER	J												
	A												
	T												
ELECTRICIAN	J												
	A												
	T												
OTHER													
26. GRAND TOTAL													

27. Official of Prime Contractor/ Subcontractor *(Title and Signature)*	28. Date Signed
29. Reviewed by Thruway Project Engineer *(Title and Signature)*	30. Date Approved

TA-W1023-9 (09/2014)

New York State Thruway Authority/New York State Canal Corporation
Office of Construction Management - Compliance Unit
P.O. Box 189, Albany, NY 12201-0189

Page of

DISADVANTAGED/MINORITY/WOMEN'S BUSINESS ENTERPRISE PROGRAM

PAYMENTS TO D/M/WBE SUBCONTRACTING FIRMS

***Purpose*:** The subcontractors/suppliers listed below are certified D/M/WBEs. Payments made are in conjunction with the UTILIZATION PLAN FOR ALL SUBCONTRACTORS (TA-W1022-9).

INSTRUCTIONS: Report is due the 15th of the month following the month of work. Zero payment reports are required. If no payments were made during the month, check the "No Payments" box.

MONTH/YEAR REPORTING

CONTRACTOR:	CONTRACT TA#:	CONTRACT D#:	% OF OVERALL WORK COMPLETED TO DATE: (Based on Dollars) %

LIST ALL D/M/WBE SUBCONTRACTORS/SUPPLIERS		ORIGINAL AGREEMENT AMOUNT	PREVIOUS PAYMENTS	PAYMENTS THIS MONTH ☐ No Payments	TOTAL PAYMENTS TO DATE	PERCENTAGE OF WORK COMPLETED TO DATE (Based on Dollars)
NAME: FEDERAL ID#:						
NAME: FEDERAL ID#:						
NAME: FEDERAL ID#:						
NAME: FEDERAL ID#:						
NAME: FEDERAL ID#:						
NAME: FEDERAL ID#:						
NAME: FEDERAL ID#:						
NAME: FEDERAL ID#:						
NAME: FEDERAL ID#:						
NAME: FEDERAL ID#:						
GRAND TOTAL AMOUNTS FOR ALL D/M/WBE SUBCONTRACTORS/SUPPLIERS						

PREPARED BY SIGNATURE:	DATE:

STATE
WAGE RATE
INFORMATION

WAGE RATES

The New York State Thruway Authority does not represent or warrant that the accompanying schedule of wages with the classification of workmen, mechanics and laborers, as required by Section 220 of the Labor Law, is complete and it reserves the right to revise such schedule when required.

In the event that revisions are made before the letting date, an amendment will be issued by the Department of purchasers of plans. In the event that the current wage rate schedule should expire before the contract for this project becomes effective the said wage rate schedule will be recertified and the Contractor will be bound by such revised schedule as recertified.

Labor classifications not appearing on this rate sheet can be used only with the consent of the Chief Engineer of the Authority and then the rate to be paid will be given by the Chief Engineer of the Authority after consulting with the State Department of Labor.

All requests for minimum wage rates for additional occupations shall be directed through the Chief Engineer, Thruway Authority.

By legislation effective August 9, 1975, if the prevailing rate of wages or the prevailing practices for supplements as determined by the State Labor Department changes after the contract is let, the Thruway Authority shall request of the State Labor Department a redetermination of the schedules of wages and supplements and such revised wage rates and supplements shall be annexed to and form a part of the contract for the work. The prevailing wage rates and supplemental benefits to be paid are those in effect at the time the work is being performed. The bidder shall take into account in his bid prices all changes in wage rates and supplements that may be forthcoming during the time the contract is in force.

The bidder shall take into account in his bid prices all changes in wage rates and supplements that may be forthcoming during the time the contract is in force.

Pursuant to Section 220-A of the New York State Labor law, the prime Contractor must provide each approved subcontractor with a copy of the schedule of wages and any supplements as specified in this Contract.

The prime Contractor must immediately obtain from each approved subcontractor a certification (TA-44105) of their receipt of, and agreement to pay the applicable prevailing wages as specified in this contract. The prime Contractor shall retain all Subcontractor certifications and provide these certifications to the Authority prior to the processing of the final payment.

The prime Contractor must submit an affidavit (TA-44115) verifying the proper payment of wages to its own employees prior to the processing of the final payment. All completed certifications and affidavits must be originals and be properly signed and notarized.

SPECIAL NOTICE TO BIDDERS IN RELATION TO OVERTIME DISPENSATION

All bidders, in submitting their bids, should base their bids and work progression on the assumption that Overtime Dispensation pursuant to Article 8 of the New York State Labor Law, for any workmen, laborers and mechanics to work more than 8 hours in any one calendar day or more than five days in any one week will not be granted for any operation for the contract duration. Subsequent to award, where the contract documents have imposed specific scheduling and/or phasing requirements or where it is determined by the Authority to be in the best interest of the public, the Authority may process, for approval by the New York State Department of Labor, requests for Overtime Dispensation on certain specific operations and, in the event approval is granted, there shall be no adjustments therefore in any bid prices.

SPECIAL NOTE
STATE PREVAILING WAGE RATES

The Contractor shall ensure that workers are paid the appropriate wages and supplemental (fringe) benefits. Throughout the contract, the Contractor shall obtain and pay workers in accordance with periodic wage rate schedule updates from the NYS Department of Labor (NYSDOL). Wage rate amendments and supplements are available on the NYSDOL web site at **www.labor.ny.gov**. All changes or clarification of labor classification(s) and applicability of prevailing wage rates shall be obtained in writing from the Office of the Director, NYSDOL Bureau of Public Work.

The NYSDOL prevailing wage rate schedule for this contract has been determined and is available on the internet. The prevailing wage rate schedule is accessed by visiting the NYSDOL web site, navigating to the appropriate web page, and entering the Prevailing Rate Case No. (PRC#). The PRC# is provided on NYSDOL Form PW-200 included in this contract Proposal.

A copy of the project specific prevailing wage rate schedule will be provided to the successful bidder upon award of the contract. Upon written request, the schedule will be provided by the Thruway Authority to prospective bidders without internet access.

Andrew M. Cuomo, Governor

Roberta Reardon, Commissioner

NYS Thruway Authority

Antonio Melendez, Civil Engineer II
200 Southern Boulevard
Albany NY 12209-2098

Schedule Year	2016 through 2017
Date Requested	10/17/2016
PRC#	2016010412

Location	I-90
Project ID#	D214479
Project Type	TAS 16-23B/D214479 Bridge Replacements at I-90 Over CSX Railroad, MP 284.74 and I-90 Over Vine Street, MP 284.80 in Syracuse Division in Onondaga County in accordance with the Plans and Specifications

PREVAILING WAGE SCHEDULE FOR ARTICLE 8 PUBLIC WORK PROJECT

Attached is the current schedule(s) of the prevailing wage rates and prevailing hourly supplements for the project referenced above. A unique Prevailing Wage Case Number (PRC#) has been assigned to the schedule(s) for your project.

The schedule is effective from July 2016 through June 2017. All updates, corrections, posted on the 1st business day of each month, and future copies of the annual determination are available on the Department's website www.labor.state.ny.us. Updated PDF copies of your schedule can be accessed by entering your assigned PRC# at the proper location on the website.

It is the responsibility of the contracting agency or its agent to annex and make part, the attached schedule, to the specifications for this project, when it is advertised for bids and /or to forward said schedules to the successful bidder(s), immediately upon receipt, in order to insure the proper payment of wages.

Please refer to the "General Provisions of Laws Covering Workers on Public Work Contracts" provided with this schedule, for the specific details relating to other responsibilities of the Department of Jurisdiction.

Upon completion or cancellation of this project, enter the required information and mail **OR** fax this form to the office shown at the bottom of this notice, **OR** fill out the electronic version via the NYSDOL website.

NOTICE OF COMPLETION / CANCELLATION OF PROJECT

Date Completed: _____ Date Cancelled: _____

Name & Title of Representative: _____

Phone: (518) 457-5589 Fax: (518) 485-1870
W. Averell Harriman State Office Campus, Bldg. 12, Room 130, Albany, NY 12240

General Provisions of Laws Covering Workers on Article 8 Public Work Contracts

Introduction

The Labor Law requires public work contractors and subcontractors to pay laborers, workers, or mechanics employed in the performance of a public work contract not less than the prevailing rate of wage and supplements (fringe benefits) in the locality where the work is performed.

Responsibilities of the Department of Jurisdiction

A Department of Jurisdiction (Contracting Agency) includes a state department, agency, board or commission: a county, city, town or village; a school district, board of education or board of cooperative educational services; a sewer, water, fire, improvement and other district corporation; a public benefit corporation; and a public authority awarding a public work contract.

The Department of Jurisdiction (Contracting Agency) awarding a public work contract MUST obtain a Prevailing Rate Schedule listing the hourly rates of wages and supplements due the workers to be employed on a public work project. This schedule may be obtained by completing and forwarding a "Request for wage and Supplement Information" form (PW 39) to the Bureau of Public Work. The Prevailing Rate Schedule MUST be included in the specifications for the contract to be awarded and is deemed part of the public work contract.

Upon the awarding of the contract, the law requires that the Department of Jurisdiction (Contracting Agency) furnish the following information to the Bureau: the name and address of the contractor, the date the contract was let and the approximate dollar value of the contract. To facilitate compliance with this provision of the Labor Law, a copy of the Department's "Notice of Contract Award" form (PW 16) is provided with the original Prevailing Rate Schedule.

The Department of Jurisdiction (Contracting Agency) is required to notify the Bureau of the completion or cancellation of any public work project. The Department's PW 200 form is provided for that purpose.

Both the PW 16 and PW 200 forms are available for completion online.

Hours

No laborer, worker, or mechanic in the employ of a contractor or subcontractor engaged in the performance of any public work project shall be permitted to work more than eight hours in any day or more than five days in any week, except in cases of extraordinary emergency. The contractor and the Department of Jurisdiction (Contracting Agency) may apply to the Bureau of Public Work for a dispensation permitting workers to work additional hours or days per week on a particular public work project.

There are very few exceptions to this rule. Complete information regarding these exceptions is available on the "4 Day / 10 Hour Work Schedule" form (PW 30R).

Wages and Supplements

The wages and supplements to be paid and/or provided to laborers, workers, and mechanics employed on a public work project shall be not less than those listed in the current Prevailing Rate Schedule for the locality where the work is performed. If a prime contractor on a public work project has not been provided with a Prevailing Rate Schedule, the contractor must notify the Department of Jurisdiction (Contracting Agency) who in turn must request an original Prevailing Rate Schedule form the Bureau of Public Work. Requests may be submitted by: mail to NYSDOL, Bureau of Public Work, State Office Bldg. Campus, Bldg. 12, Rm. 130, Albany, NY 12240; Fax to Bureau of Public Work (518) 485-1870; or electronically at the NYSDOL website www.labor.state.ny.us.

Upon receiving the original schedule, the Department of Jurisdiction (Contracting Agency) is REQUIRED to provide complete copies to all prime contractors who in turn MUST, by law, provide copies of all applicable county schedules to each subcontractor and obtain from each subcontractor, an affidavit certifying such schedules were received. If the original schedule expired, the contractor may obtain a copy of the new annual determination from the NYSDOL website www.labor.state.ny.us.

The Commissioner of Labor makes an annual determination of the prevailing rates. This determination is in effect from July 1st through June 30th of the following year. The annual determination is available on the NYSDOL website www.labor.state.ny.us.

Payrolls and Payroll Records

Every contractor and subcontractor MUST keep original payrolls or transcripts subscribed and affirmed as true under penalty of perjury. Payrolls must be maintained for at least three (3) years from the project's date of completion. At a minimum, payrolls must show the following information for each person employed on a public work project: Name, Address, Last 4 Digits of Social Security Number, Classification(s) in which the worker was employed, Hourly wage rate(s) paid, Supplements paid or provided, and Daily and weekly number of hours worked in each classification.

Every contractor and subcontractor shall submit to the Department of Jurisdiction (Contracting Agency), within thirty (30) days after issuance of its first payroll and every thirty (30) days thereafter, a transcript of the original payrolls, subscribed and affirmed as true under penalty of perjury. The Department of Jurisdiction (Contracting Agency) shall collect, review for facial validity, and maintain such payrolls.

In addition, the Commissioner of Labor may require contractors to furnish, with ten (10) days of a request, payroll records sworn to as their validity and accuracy for public work and private work. Payroll records include, by are not limited to time cards, work description sheets, proof that supplements were provided, cancelled payroll checks and payrolls. Failure to provide the requested information within the allotted ten (10) days will result in the withholding of up to 25% of the contract, not to exceed $100,000.00. If the contractor or subcontractor does not maintain a place of business in New York State and the amount of the contract exceeds $25,000.00, payroll records and certifications must be kept on the project worksite.

The prime contractor is responsible for any underpayments of prevailing wages or supplements by any subcontractor.

All contractors or their subcontractors shall provide to their subcontractors a copy of the Prevailing Rate Schedule specified in the public work contract as well as any subsequently issued schedules. A failure to provide these schedules by a contractor or subcontractor is a violation of Article 8, Section 220-a of the Labor Law.

All subcontractors engaged by a public work project contractor or its subcontractor, upon receipt of the original schedule and any subsequently issued schedules, shall provide to such contractor a verified statement attesting that the subcontractor has received the Prevailing Rate Schedule and will pay or provide the applicable rates of wages and supplements specified therein. (See NYS Labor Laws, Article 8 . Section 220-a).

Determination of Prevailing Wage and Supplement Rate Updates Applicable to All Counties

The wages and supplements contained in the annual determination become effective July 1st whether or not the new determination has been received by a given contractor. Care should be taken to review the rates for obvious errors. Any corrections should be brought to the Department's attention immediately. It is the responsibility of the public work contractor to use the proper rates. If there is a question on the proper classification to be used, please call the district office located nearest the project. Any errors in the annual determination will be corrected and posted to the NYSDOL website on the first business day of each month. Contractors are responsible for paying these updated rates as well, retroactive to July 1st.

When you review the schedule for a particular occupation, your attention should be directed to the dates above the column of rates. These are the dates for which a given set of rates is effective. To the extent possible, the Department posts rates in its possession that cover periods of time beyond the July 1st to June 30th time frame covered by a particular annual determination. Rates that extend beyond that instant time period are informational ONLY and may be updated in future annual determinations that actually cover the then appropriate July 1st to June 30th time period.

Withholding of Payments

When a complaint is filed with the Commissioner of Labor alleging the failure of a contractor or subcontractor to pay or provide the prevailing wages or supplements, or when the Commissioner of Labor believes that unpaid wages or supplements may be due, payments on the public work contract shall be withheld from the prime contractor in a sufficient amount to satisfy the alleged unpaid wages and supplements, including interest and civil penalty, pending a final determination.

When the Bureau of Public Work finds that a contractor or subcontractor on a public work project failed to pay or provide the requisite prevailing wages or supplements, the Bureau is authorized by Sections 220-b and 235.2 of the Labor Law to so notify the financial officer of the Department of Jurisdiction (Contracting Agency) that awarded the public work contract. Such officer MUST then withhold or cause to be withheld from any payment due the prime contractor on account of such contract the amount indicated by the Bureau as sufficient to satisfy the unpaid wages and supplements, including interest and any civil penalty that may be assessed by the Commissioner of Labor. The withholding continues until there is a final determination of the underpayment by the Commissioner of Labor or by the court in the event a legal proceeding is instituted for review of the determination of the Commissioner of Labor.

The Department of Jurisdiction (Contracting Agency) shall comply with this order of the Commissioner of Labor or of the court with respect to the release of the funds so withheld.

Summary of Notice Posting Requirements

The current Prevailing Rate Schedule must be posted in a prominent and accessible place on the site of the public work project. The prevailing wage schedule must be encased in, or constructed of, materials capable of withstanding adverse weather conditions and be titled "PREVAILING RATE OF WAGES" in letters no smaller than two (2) inches by two (2) inches.

The "Public Work Project" notice must be posted at the beginning of the performance of every public work contract, on each job site.

Every employer providing workers. compensation insurance and disability benefits must post notices of such coverage in the format prescribed by the Workers. Compensation Board in a conspicuous place on the jobsite.

Every employer subject to the NYS Human Rights Law must conspicuously post at its offices, places of employment, or employment training centers, notices furnished by the State Division of Human Rights.

Employers liable for contributions under the Unemployment Insurance Law must conspicuously post on the jobsite notices furnished by the NYS Department of Labor.

Apprentices

Employees cannot be paid apprentice rates unless they are individually registered in a program registered with the NYS Commissioner of Labor. The allowable ratio of apprentices to journeyworkers in any craft classification can be no greater than the statewide building trade ratios promulgated by the Department of Labor and included with the Prevailing Rate Schedule. An employee listed on a payroll as an apprentice who is not registered as above or is performing work outside the classification of work for which the apprentice is indentured, must be paid the prevailing journeyworker's wage rate for the classification of work the employee is actually performing.

NYSDOL Labor Law, Article 8, Section 220-3, require that only apprentices individually registered with the NYS Department of Labor may be paid apprenticeship rates on a public work project. No other Federal or State Agency of office registers apprentices in New York State.

Persons wishing to verify the apprentice registration of any person must do so in writing by mail, to the NYSDOL Office of Employability Development / Apprenticeship Training, State Office Bldg. Campus, Bldg. 12, Albany, NY 12240 or by Fax to NYSDOL Apprenticeship Training (518) 457-7154. All requests for verification must include the name and social security number of the person for whom the information is requested.

The only conclusive proof of individual apprentice registration is written verification from the NYSDOL Apprenticeship Training Albany Central office. Neither Federal nor State Apprenticeship Training offices outside of Albany can provide conclusive registration information.

It should be noted that the existence of a registered apprenticeship program is not conclusive proof that any person is registered in that program. Furthermore, the existence or possession of wallet cards, identification cards, or copies of state forms is not conclusive proof of the registration of any person as an apprentice.

Interest and Penalties

In the event that an underpayment of wages and/or supplements is found:

- Interest shall be assessed at the rate then in effect as prescribed by the Superintendent of Banks pursuant to section 14-a of the Banking Law, per annum from the date of underpayment to the date restitution is made.
- A Civil Penalty may also be assessed, not to exceed 25% of the total of wages, supplements, and interest due.

Debarment

Any contractor or subcontractor and/or its successor shall be ineligible to submit a bid on or be awarded any public work contract or subcontract with any state, municipal corporation or public body for a period of five (5) years when:

- Two (2) willful determinations have been rendered against that contractor or subcontractor and/or its successor within any consecutive six (6) year period.
- There is any willful determination that involves the falsification of payroll records or the kickback of wages or supplements.

Criminal Sanctions

Willful violations of the Prevailing Wage Law (Article 8 of the Labor Law) may be a felony punishable by fine or imprisonment of up to 15 years, or both.

Discrimination

No employee or applicant for employment may be discriminated against on account of age, race, creed, color, national origin, sex, disability or marital status.

No contractor, subcontractor nor any person acting on its behalf, shall by reason of race, creed, color, disability, sex or national origin discriminate against any citizen of the State of New York who is qualified and available to perform the work to which the employment relates (NYS Labor Law, Article 8, Section 220-e(a)).

No contractor, subcontractor, nor any person acting on its behalf, shall in any manner, discriminate against or intimidate any employee on account of race, creed, color, disability, sex, or national origin (NYS Labor Law, Article 8, Section 220-e(b)).

The Human Rights Law also prohibits discrimination in employment because of age, marital status, or religion.

There may be deducted from the amount payable to the contractor under the contract a penalty of $50.00 for each calendar day during which such person was discriminated against or intimidated in violation of the provision of the contract (NYS Labor Law, Article 8, Section 220-e(c)).

The contract may be cancelled or terminated by the State or municipality. All monies due or to become due thereunder may be forfeited for a second or any subsequent violation of the terms or conditions of the anti-discrimination sections of the contract (NYS Labor Law, Article 8, Section 220-e(d)).

Every employer subject to the New York State Human Rights Law must conspicuously post at its offices, places of employment, or employment training centers notices furnished by the State Division of Human Rights.

Workers' Compensation

In accordance with Section 142 of the State Finance Law, the contractor shall maintain coverage during the life of the contract for the benefit of such employees as required by the provisions of the New York State Workers' Compensation Law.

A contractor who is awarded a public work contract must provide proof of workers' compensation coverage prior to being allowed to begin work.

The insurance policy must be issued by a company authorized to provide workers' compensation coverage in New York State. Proof of coverage must be on form C-105.2 (Certificate of Workers' Compensation Insurance) and must name this agency as a certificate holder.

If New York State coverage is added to an existing out-of-state policy, it can only be added to a policy from a company authorized to write workers' compensation coverage in this state. The coverage must be listed under item 3A of the information page.

The contractor must maintain proof that subcontractors doing work covered under this contract secured and maintained a workers' compensation policy for all employees working in New York State.

Every employer providing worker's compensation insurance and disability benefits must post notices of such coverage in the format prescribed by the Workers' Compensation Board in a conspicuous place on the jobsite.

Unemployment Insurance

Employers liable for contributions under the Unemployment Insurance Law must conspicuously post on the jobsite notices furnished by the New York State Department of Labor.

Andrew M. Cuomo, Governor

Roberta Reardon, Commissioner

NYS Thruway Authority

Antonio Melendez, Civil Engineer II
200 Southern Boulevard
Albany NY 12209-2098

Schedule Year 2016 through 2017
Date Requested 10/17/2016
PRC# 2016010412

Location I-90
Project ID# D214479
Project Type TAS 16-23B/D214479 Bridge Replacements at I-90 Over CSX Railroad, MP 284.74 and I-90 Over Vine Street, MP 284.80 in Syracuse Division in Onondaga County in accordance with the Plans and Specifications

Notice of Contract Award

New York State Labor Law, Article 8, Section 220.3a requires that certain information regarding the awarding of public work contracts, be furnished to the Commissioner of Labor. One "Notice of Contract Award" (PW 16, which may be photocopied), **MUST** be completed for **EACH** prime contractor on the above referenced project.

Upon notifying the successful bidder(s) of this contract, enter the required information and mail **OR** fax this form to the office shown at the bottom of this notice, **OR** fill out the electronic version via the NYSDOL website.

Contractor Information

All information must be supplied

Federal Employer Identification Number: _____

Name: _____

Address: _____

_____

City: _____ State: _____ Zip: _____

Amount of Contract: $_____

Approximate Starting Date: ____/____/____

Approximate Completion Date: ____/____/____

Contract Type:

[ ] (01) General Construction
[ ] (02) Heating/Ventilation
[ ] (03) Electrical
[ ] (04) Plumbing
[ ] (05) Other : _____

Phone: (518) 457-5589 Fax: (518) 485-1870
W. Averell Harriman State Office Campus, Bldg. 12, Room 130, Albany, NY 12240

IMPORTANT NOTICE

FOR

CONTRACTORS & CONTRACTING AGENCIES

Social Security Numbers on Certified Payrolls

The Department of Labor is cognizant of the concerns of the potential for misuse or inadvertent disclosure of social security numbers. Identity theft is a growing problem and we are sympathetic to contractors' concerns with regard to inclusion of this information on payrolls if another identifier will suffice.

For these reasons, ***the substitution of the use of the last four digits of the social security number on certified payrolls submitted to contracting agencies on public work projects is now acceptable to the Department of Labor.***

NOTE: This change does not affect the Department's ability to request and receive the entire social security number from employers during the course of its public work / prevailing wage investigations.

To all State Departments, Agency Heads and Public Benefit Corporations
IMPORTANT NOTICE REGARDING PUBLIC WORK ENFORCEMENT FUND

Budget Policy & Reporting Manual

B-610

Public Work Enforcement Fund

effective date December 7, 2005

---

1. Purpose and Scope:

This Item describes the Public Work Enforcement Fund (the Fund, PWEF) and its relevance to State agencies and public benefit corporations engaged in construction or reconstruction contracts, maintenance and repair, and announces the recently-enacted increase to the percentage of the dollar value of such contracts that must be deposited into the Fund. This item also describes the roles of the following entities with respect to the Fund:

- New York State Department of Labor (DOL),
- The Office of the State of Comptroller (OSC), and
- State agencies and public benefit corporations.

2. Background and Statutory References:

DOL uses the Fund to enforce the State's Labor Law as it relates to contracts for construction or reconstruction, maintenance and repair, as defined in subdivision two of Section 220 of the Labor Law. State agencies and public benefit corporations participating in such contracts are required to make payments to the Fund.

Chapter 511 of the Laws of 1995 (as amended by Chapter 513 of the Laws of 1997, Chapter 655 of the Laws of 1999, Chapter 376 of the Laws of 2003 and Chapter 407 of the Laws of 2005) established the Fund.

3. Procedures and Agency Responsibilities:

The Fund is supported by transfers and deposits based on the value of contracts for construction and reconstruction, maintenance and repair, as defined in subdivision two of Section 220 of the Labor Law, into which all State agencies and public benefit corporations enter.

Chapter 407 of the Laws of 2005 increased the amount required to be provided to this fund to .10 of one-percent of the total cost of each such contract, to be calculated at the time agencies or public benefit corporations enter into a new contract or if a contract is amended. The provisions of this bill became effective August 2, 2005.

To all State Departments, Agency Heads and Public Benefit Corporations
IMPORTANT NOTICE REGARDING PUBLIC WORK ENFORCEMENT FUND

OSC will report to DOL on all construction-related ("D") contracts approved during the month, including contract amendments, and then DOL will bill agencies the appropriate assessment monthly. An agency may then make a determination if any of the billed contracts are exempt and so note on the bill submitted back to DOL. For any instance where an agency is unsure if a contract is or is not exempt, they can call the Bureau of Public Work at the number noted below for a determination. Payment by check or journal voucher is due to DOL within thirty days from the date of the billing. DOL will verify the amounts and forward them to OSC for processing.

For those contracts which are not approved or administered by the Comptroller, monthly reports and payments for deposit into the Public Work Enforcement Fund must be provided to the Administrative Finance Bureau at the DOL within 30 days of the end of each month or on a payment schedule mutually agreed upon with DOL.

Reports should contain the following information:

- Name and billing address of State agency or public benefit corporation;
- State agency or public benefit corporation contact and phone number;
- Name and address of contractor receiving the award;
- Contract number and effective dates;
- Contract amount and PWEF assessment charge (if contract amount has been amended, reflect increase or decrease to original contract and the adjustment in the PWEF charge); and
- Brief description of the work to be performed under each contract.

Checks and Journal Vouchers, payable to the "New York State Department of Labor" should be sent to:

Department of Labor
Administrative Finance Bureau-PWEF Unit
Building 12, Room 464
State Office Campus
Albany, NY 12240

Any questions regarding billing should be directed to NYSDOL's Administrative Finance Bureau-PWEF Unit at (518) 457-3624 and any questions regarding Public Work Contracts should be directed to the Bureau of Public Work at (518) 457-5589.

Construction Industry
Fair Play Act

Required Posting For Labor Law
Article 25-B § 861-d

Construction industry employers must post the "Construction Industry Fair Play Act" notice in a prominent and accessible place on the job site.

Failure to post the notice can result in penalties of up to $1,500 for a first offense and up to $5,000 for a second offense.

The posting is included as part of this wage schedule. Additional copies may be obtained from the NYS DOL website, www.labor.ny.gov.

If you have any questions concerning the Fair Play Act, please call the State Labor Department toll-free at 1-866-435-1499 or email us at: dol.misclassified@labor.state.ny.us .

New York State Department of Labor
Required Notice under Article 25-B of the Labor Law

ATTENTION ALL EMPLOYEES, CONTRACTORS AND SUBCONTRACTORS:
YOU ARE COVERED BY THE
CONSTRUCTION INDUSTRY FAIR PLAY ACT

The law says that you are an employee unless:

- You are free from direction and control in performing your job AND
- You perform work that is not part of the usual work done by the business that hired you AND
- You have an independently established business

Your employer cannot consider you to be an independent contractor unless all three of these facts apply to your work.

IT IS AGAINST THE LAW FOR AN EMPLOYER TO MISCLASSIFY EMPLOYEES AS INDEPENDENT CONTRACTORS OR PAY EMPLOYEES OFF-THE-BOOKS.

Employee rights. If you are an employee:

- You are entitled to state and federal worker protections such as
  - unemployment benefits, if unemployed through no fault of your own, able to work, and otherwise qualified
  - workers' compensation benefits for on-the-job injuries
  - payment for wages earned, minimum wage, and overtime (under certain conditions)
  - prevailing wages on public work projects
  - the provisions of the National Labor Relations Act and
  - a safe work environment
- It is a violation of this law for employers to retaliate against anyone who asserts their rights under the law. Retaliation subjects an employer to civil penalties, a private lawsuit or both.

Independent Contractors: If you are an independent contractor*:*

- You must pay all taxes required by New York State and Federal Law.

Penalties for paying off-the-books or improperly treating employees as independent contractors:

- **Civil Penalty** — First Offense: up to $2,500 per employee.
  Subsequent Offense(s): up to $5,000 per employee.

- **Criminal Penalty** — First Offense: Misdemeanor - up to 30 days in jail, up to a $25,000 fine and debarment from performing Public Work for up to one year.
  Subsequent Offense(s): Misdemeanor - up to 60 days in jail, up to a $50,000 fine and debarment from performing Public Work for up to 5 years.

If you have questions about your employment status or believe that your employer may have violated your rights and you want to file a complaint, call the Department of Labor at 1(866)435-1499 or send an email to dol.misclassified@labor.state.ny.us. All complaints of fraud and violations are taken seriously and you can remain anonymous.

Employer Name:

IA 999 (09/10)

WORKER NOTIFICATION

(Labor Law §220, paragraph a of subdivision 3-a)

Effective February 24, 2008

This provision is an addition to the existing prevailing wage rate law, Labor Law §220, paragraph a of subdivision 3-a. It requires contractors and subcontractors to provide written notice to all laborers, workers or mechanics of the *prevailing wage rate* for their particular job classification *on each pay stub**. It also requires contractors and subcontractors to *post a notice* at the beginning of the performance of every public work contract *on each job site* that includes the telephone number and address for the Department of Labor and a statement informing laborers, workers or mechanics of their right to contact the Department of Labor if he/she is not receiving the proper prevailing rate of wages and/or supplements for his/her particular job classification. The required notification will be provided with each wage schedule, may be downloaded from our website *www.labor.state.ny.us* or made available upon request by contacting the Bureau of Public Work at 518-457-5589.

* In the event that the required information will not fit on the pay stub, an accompanying sheet or attachment of the information will suffice.

(11.11)

New York State Department of Labor
Bureau of Public Work

Attention Employees

THIS IS A:

PUBLIC WORK PROJECT

If you are employed on this project as a **worker, laborer, or mechanic** you are entitled to receive the **prevailing wage and supplements rate** for the classification at which you are working.

Chapter 629 of the Labor Laws of 2007:

These wages are set by law and must be posted at the work site. They can also be found at: www.labor.ny.gov

If you feel that you have not received proper wages or benefits, please call our nearest office.*

Albany	(518) 457-2744	Patchogue	(631) 687-4882
Binghamton	(607) 721-8005	Rochester	(585) 258-4505
Buffalo	(716) 847-7159	Syracuse	(315) 428-4056
Garden City	(516) 228-3915	Utica	(315) 793-2314
New York City	(212) 932-2419	White Plains	(914) 997-9507
Newburgh	(845) 568-5156		

* For New York City government agency construction projects, please contact the Office of the NYC Comptroller at (212) 669-4443, or www.comptroller.nyc.gov – click on Bureau of Labor Law.

Contractor Name: _____

Project Location: _____

OSHA 10-hour Construction

Safety and Health Course – S1537-A

Effective July 18, 2008

This provision is an addition to the existing prevailing wage rate law, Labor Law §220, section 220-h. It requires that on all public work projects of at least $250,000.00, all laborers, workers and mechanics working on the site, be certified as having successfully completed the OSHA 10-hour construction safety and health course. It further requires that the advertised bids and contracts for every public work contract of at least $250,000.00, contain a provision of this requirement.

NOTE: ***The OSHA 10 Legislation only applies to workers on a public work project that are required, under Article 8, to receive the prevailing wage.***

Where to find OSHA 10-hour Construction Course

1. NYS Department of Labor website for scheduled outreach training at:

   www.labor.state.ny.us/workerprotection/safetyhealth/DOSH_ONSITE_CONSULTATION.shtm

2. OSHA Training Institute Education Centers:

   Rochester Institute of Technology OSHA Education Center
   Rochester, NY
   Donna Winter
   Fax (585) 475-6292
   e-mail: dlwtpo@rit.edu
   (866) 385-7470 Ext. 2919
   www.rit.edu/~outreach/course.php3?CourseID=54

   Atlantic OSHA Training Center
   UMDNJ – School of Public Health
   Piscataway, NJ
   Janet Crooks
   Fax (732) 235-9460
   e-mail: crooksje@umdnj.edu
   (732) 235-9455
   https://ophp.umdnj.edu/wconnect/ShowSchedule.awp?~~GROUP~AOTCON~10~

   Atlantic OSHA Training Center
   University at Buffalo
   Buffalo, New York
   Joe Syracuse
   Fax (716) 829-2806
   e-mail:mailto:japs@buffalo.edu
   (716) 829-2125
   http://www.smbs.buffalo.edu/CENTERS/trc/schedule_OSHA.php

   Keene State College
   Manchester, NH
   Leslie Singleton
   e-mail: lsingletin@keene.edu
   (800) 449-6742
   www.keene.edu/courses/print/courses_osha.cfm

3. List of trainers and training schedules for OSHA outreach training at:

   www.OutreachTrainers.org

Requirements for OSHA 10 Compliance

Chapter 282 of the Laws of 2007, codified as Labor Law 220-h took effect on July 18, 2008. The statute provides as follows:

The advertised specifications for every contract for public work of $250,000.00 or more must contain a provision requiring that every worker employed in the performance of a public work contract shall be certified as having completed an OSHA 10 safety training course. The clear intent of this provision is to require that all employees of public work contractors, required to be paid prevailing rates, receive such training "prior to the performing any work on the project."

The Bureau will enforce the statute as follows:

All contractors and sub contractors must attach a copy of proof of completion of the OSHA 10 course to the first certified payroll submitted to the contracting agency and on each succeeding payroll where any new or additional employee is first listed.

Proof of completion may include but is not limited to:

- Copies of bona fide course completion card (*Note: Completion cards do not have an expiration date.*)
- Training roster, attendance record of other documentation from the certified trainer pending the issuance of the card.
- Other valid proof

**A certification by the employer attesting that all employees have completed such a course is not sufficient proof that the course has been completed.

Any questions regarding this statute may be directed to the New York State Department of Labor, Bureau of Public Work at 518-485-5696.

IMPORTANT INFORMATION

Regarding Use of Form PW30R

"Employer Registration for Use of 4 Day / 10 Hour Work Schedule"

To use the '4 Day / 10 Hour Work Schedule':

There MUST be a *Dispensation of Hours (PW30)* in place on the project

AND

You MUST register your intent to work 4 / 10 hour days, by completing the PW30R Form.

REMEMBER…

The '4 Day / 10 Hour Work Schedule' applies ONLY to Job Classifications and Counties listed on the PW30R Form.

Do not write in any additional Classifications or Counties.

(**Please note** : For each Job Classification check the individual wage schedule for specific details regarding their 4/10 hour day posting.)

Instructions for Completing Form PW30R

"Employer Registration for Use of 4 Day / 10 Hour Work Schedule"

Before completing Form PW30R check to be sure …

- There is a *Dispensation of Hours* in place on the project.
- The 4 Day / 10 Hour Work Schedule applies to the Job Classifications you will be using.
- The 4 Day / 10 Hour Work Schedule applies to the County / Counties where the work will take place.

Instructions (Type or Print legibly):

Contractor Information:

- Enter the Legal Name of the business, FEIN, Street Address, City, State, Zip Code; the Company's Phone and Fax numbers; and the Company's email address (if applicable)
- Enter the Name of a Contact Person for the Company along with their Phone and Fax numbers, and the personal email address (if applicable)

Project Information:

- Enter the Prevailing Rate Case number (PRC#) assigned to this project
- Enter the Project Name / Type (i.e. Smithtown CSD – Replacement of HS Roof)
- Enter the Exact Location of Project (i.e. Smithtown HS, 143 County Route #2, Smithtown,NY; Bldgs. 1 & 2)
- If you are a Subcontractor, enter the name of the Prime Contractor for which you work
- On the Checklist of Job Classifications -
  - Go to pages 2 and 3 of the form
  - Place a checkmark in the box to the right of the Job Classification you are choosing
  - Mark all Job Classifications that apply

    ****Do not write in any additional Classifications or Counties.****

Requestor Information:

- Enter the name of the person submitting the registration, their title with the company , and the date the registration is filled out

Return Completed Form:

- **Mail** the completed PW30R form (3 pages) to: NYSDOL Bureau of Public Work, SOBC – Bldg.12 – Rm.130, Albany, NY 12240 -***OR -***
- **Fax** the completed PW30R form (3 pages) to: NYSDOL Bureau of Public Work at (518)485-1870

Bureau of Public Work
Harriman State Office Campus
Building 12 - Room 130
Albany, New York 12240
Phone - (518) 457-5589 Fax - (518) 485-1870

Employer Registration for Use of 4 Day / 10 Hour Work Schedule

Before completing Form PW30R check to be sure …
There is a *Dispensation of Hours* in place on the project.
The 4 Day / 10 Hour Work Schedule applies to the Job Classifications you will be using.
The 4 Day / 10 Hour Work Schedule applies to the County / Counties where the work will take place.

Please Type or Print the Requested Information

When completed …
Mail to NYSDOL Bureau of Public Work, SOBC, Bldg. 12, Rm.130, Albany, NY 12240
-or-
Fax to NYSDOL Bureau of Public Work at (518) 485-1870

Contractor Information

Company Name: _____ FEIN: _____

Address: _____

City: _____ State: _____ Zip Code: _____

Phone Number _____ Fax Number: _____ Email Address: _____

Contact Person: _____

Phone No: _____ Fax No: _____ Email: _____

Project Information

Project PRC#: _____ Project Name/Type: _____

Exact Location of Project: _____ County: _____

(If you are Subcontractor)
Prime Contractor Name: _____

Job Classification(s) to Work 4/10 Schedule: *(Choose all that apply on Job Classification Checklist - Pages 3 -7)*
**** Do not write in any additional Classifications or Counties****

Requestor Information

Name: _____

Title: _____ Date : _____

Please use the list below with the number assigned to each county as a reference to the corresponding numbers listed in the following pages under "Entire Counties" & "Partial Counties".

1. Albany County
2. Allegany County
3. Bronx County
4. Broome County
5. Cattaraugus County
6. Cayuga County
7. Chautauqua County
8. Chemung County
9. Chenango County
10. Clinton County
11. Columbia County
12. Cortland County
13. Delaware County
14. Dutchess County
15. Erie County
16. Essex County
17. Franklin County
18. Fulton county
19. Genesee County
20. Greene County
21. Hamilton County
22. Herkimer County
23. Jefferson County
24. Kings County (Brooklyn)
25. Lewis County
26. Livingston County
27. Madison County
28. Monroe County
29. Montgomery County
30. Nassau County
31. New York County (Manhattan)
32. Niagara County
33. Oneida County
34. Onondaga County
35. Ontario County
36. Orange County
37. Orleans County
38. Oswego County
39. Otsego County
40. Putnam County
41. Queens County
42. Rensselaer County
43. Richmond County (Staten Island)
44. Rockland County
45. Saint Lawrence County
46. Saratoga County
47. Schenectady County
48. Schoharie County
49. Schuyler County
50. Seneca County
51. Steuben County
52. Suffolk County
53. Sullivan County
54. Tioga County
55. Tompkins County
56. Ulster County
57. Warren county
58. Washington County
59. Wayne County
60. Westchester County
61. Wyoming County
62. Yates County

Job Classification Checklist

(Place a checkmark by all classifications that will be using the 4/10 schedule)

**** Do not write in any additional Classifications or Counties****

Job Classification	Tag #	Entire Counties	Partial Counties	Check Box
Carpenter-Building	276B-All	7	2 ,5	
Carpenter-Building	276B-Cat	15	5	
Carpenter - Building	276-B--LIV	26, 28, 35, 59	61	
Carpenter-Building	276B-Gen	19, 32, 37	61	
Carpenter-Floor Layers	276B-FL-Liv	26, 28, 35, 59	61	
Carpenter-Heavy&Highway	276HH-All	2, 5, 7		
Carpenter-Heavy&Highway	276HH-Erie	15		
Carpenter-Heavy&Highway	276HH- Gen	19, 32, 37, 61		
Carpenter-Heavy&Highway	276HH-Liv	26, 28, 35, 59		
Carpenter-Residential	276R-All	7	2, 5	
Carpenter - Building	277B-Bro	4, 54		
Carpenter - Building	277B-CAY	6, 50, 62		
Carpenter - Building	277B-CS	8, 12, 49, 51, 55	2	
Carpenter - Building	277 JLS	23, 25, 45		
Carpenter - Building	277 omh	22, 27, 33		
Carpenter - Building	277 On	34		
Carpenter - Building	277 Os	38		
Carpenter - Building	277CDO Bldg	9, 13, 39		
Carpenter - Heavy&Highway	277CDO HH	9, 13, 39		
Carpenter - Heavy&Highway	277HH-BRO	4, 6, 8, 12, ,22, 23, 25, 27, 33, 34, 38, 45, 49, 50, 51, 54, 55, 62		
Carpenter - Building	291B-Alb	1, 18, 20, 29, 42, 47, 48		
Carpenter - Building	291B-Cli	10, 16, 17		
Carpenter - Building	291B-Ham	21, 57, 58		
Carpenter - Building	291B-Sar	46		
Carpenter - Heavy&Highway	291HH-Alb	1, 10, 16, 17,18, 20, 21, 29, 42, 46, 47, 48, 57, 58		
Electrician	25m	30, 52		
Electrician-Teledata Cable Splicer	43	12, 22, 27, 33, 38	6, 9, 34, 39, 55, 59	

Job Classification Checklist

(Place a checkmark by all classifications that will be using the 4/10 schedule)

**** Do not write in any additional Classifications or Counties****

Job Classification	Tag #	Entire Counties	Partial Counties	Check Box
Electrician	86	26, 28	19, 35, 37, 59, 61	☐
Electrician	840Teledata and 840 Z1	62	6, 34, 35, 50, 59	☐
Electrician	910	10, 16, 17, 23, 25, 45		☐
Electrician Lineman	1049Line/Gas	30, 41, 52		☐
Electrician Lineman	1249a	1, 2, 4, 5, 6, 7, 8, 9, 10, 11, 12, 13, 14, 15, 16, 17, 18, 19, 20, 21, 22, 23, 25, 26, 27, 28, 29, 32, 33, 34, 35, 36, 37, 38, 39, 40, 42, 44, 46, 47, 48, 49, 50, 45, 51, 53, 54, 55, 56, 57, 58, 59, 61, 62		☐
Electrical Lineman	1249a West	60		☐
Electrical Lineman	1249a-LT	1, 2, 4, 5, 6, 7, 8, 9, 10, 12, 13, 15, 16, 17, 18, 19, 20, 21, 22, 23, 25, 26, 27, 28, 29, 32, 33, 34, 35, 37, 38, 39, 42, 46, 47, 48, 49, 50, 45, 51, 53, 54, 55, 57, 58, 59, 61, 62		☐
Electrical Lineman	1249aREG8LT	11, 14, 36, 40, 44, 56		☐
Electrical Lineman	1249aWestLT	60		☐
Elevator Constructor	138	11, 14, 20, 36, 40, 53, 56	13, 44, 60	☐
Elevator Constructor	14	2, 5, 7, 15, 19, 32, 37, 61		☐
Elevator Constructor	27	8, 26, 28, 35, 49, 50, 51, 59, 62		☐
Elevator Constructor	35	1, 10, 16, 18, 21, 22, 29, 39, 42, 46, 47, 48, 57, 58		☐
Elevator Constructor	62.1	4, 6, 9, 12, 23, 25, 27, 33, 34, 38, 45, 54, 55	13	☐
Glazier	201	1, 10, 11, 16, 17, 18, 20, 21, 29, 42, 46, 47, 48, 57, 58		☐
Glazier	660r	2, 5, 7, 15, 19, 32, 37, 61		☐
Glazier	660	2, 5, 7, 15, 19, 32, 37, 61		☐
Glazier	677.1	23, 25, 26, 28, 35, 45, 50, 59, 62		☐
Glazier	677Z-2	6, 12, 22, 27, 33, 34, 38		☐
Glazier	677z3	4, 8, 9, 13, 39, 49, 51, 54, 55		☐
Glazier	677r.2	6, 12, 22, 27, 33, 34, 38		☐
Insulator - Heat & Frost	30-Syracuse	4, 6, 8, 9, 12, 22, 23, 25, 27, 33, 34, 38, 39, 49, 50, 45, 54, 55		☐
Laborers- Tunnel	157	47	18, 29, 46	☐
Laborers- Heavy & Highway	157h/h	47	18, 29, 46	☐

Job Classification Checklist

(Place a checkmark by all classifications that will be using the 4/10 schedule)

**** Do not write in any additional Classifications or Counties****

Job Classification	Tag #	Entire Counties	Partial Counties	Check Box
Laborers- Heavy & Highway	1822/2h	10,16,57		☐
Laborers- Heavy & Highway	1822/2h(2)	17, 23, 25, 45		☐
Laborers- Tunnel	1822T	10, 16 57		☐
Laborers- Tunnel	1822T(2)	17, 23, 25, 45		☐
Laborers- Tunnel	35T	21, 22, 27, 33	18, 29	☐
Laborers- Tunnel	190	1, 42, 58	11, 20, 46	☐
Laborers- Heavy & Highway	190 h/h	1, 42, 58	11, 20, 46	☐
Laborers- Heavy & Highway	35/2h	21, 22, 27, 33	18, 29	☐
Laborers- Tunnel	35T	21, 22, 27, 33	18, 29	☐
Laborers- Heavy & Highway	633hON	34		☐
Laborers- Heavy & Highway	633hOS	38		☐
Laborers- Heavy & Highway	633h Cay	6		☐
Laborers- building	633 bON	34		☐
Laborers- building	633b Cay	6		☐
Laborers- building	633bOS	38		☐
Laborers- Tunnel	633T (Cay)	6		☐
Laborers- Tunnel	633T (ON)	34		☐
Laborers- Tunnel	633T (OS)	38		☐
Laborers- Heavy & Highway	785h	12, 55	49, 54	☐
Laborers-Tunnel	785T	12, 55		☐
Laborers - Building	785(7)	4	9, 13, 54	☐
Laborers - Building	785B-CS	8, 51	49	☐
Laborers- Heavy & Highway	7-785b	12, 55	49, 54	☐
Laborers Heavy & Highway	785(7)	4	9, 13, 54	☐
Laborer - Heavy & Highway	785HH-CS	8, 51	49	☐
Laborer - Building	621b	2, 7	5	☐
Laborer - Residential	621r	2, 7	5	☐

Job Classification Checklist

(Place a checkmark by all classifications that will be using the 4/10 schedule)

**** Do not write in any additional Classifications or Counties****

Job Classification	Tag #	Entire Counties	Partial Counties	Check Box
Mason-Building	2TS.1	1, 10,11, 16, 17, 18, 20, 21, 29, 42, 46, 47, 48, 57, 58		☐
Mason-Building	2TS.2	22, 23, 25, 33, 45	27	☐
Mason-Building	2TS.3	6, 34, 38	27	☐
Mason-Building	2b-on	34		☐
Mason-Building	2b.1	1, 11, 18, 20, 21, 29, 42, 46, 47, 48, 58	57	☐
Mason-Building	2b.2	22, 33	25	☐
Mason-Building	2b.3	6, 34	27	☐
Mason-Building	2b.4	38		☐
Mason-Building	2b.5	23	25	☐
Mason-Building	2b.6	45		☐
Mason-Building	2b.8	10, 16, 17	57	☐
Mason-Building	2b.5	23	25	☐
Mason-Building	2b.6	45		☐
Mason-Building	2b.8	10, 16, 17	57	☐
Mason-Building	3b-Co-Z2	8, 49, 51	2	☐
Mason-Building	3B-Z1	19, 26, 28, 35, 50, 59, 61, 62		☐
Mason-Building-Residential	3B-Z1R	19, 26, 28, 35, 50, 59, 61, 62		☐
Mason-Building	3B-Bing-Z2	4, 9, 13, 39, 54		☐
Mason-Building	3B-Ith-Z2	12, 55		☐
				☐
				☐
				☐
				☐
				☐
				☐

Job Classification Checklist

(Place a checkmark by all classifications that will be using the 4/10 schedule)

**** Do not write in any additional Classifications or Counties****

Job Classification	Tag #	Entire Counties	Partial Counties	Check Box
Mason-Building	3B-Jam-Z2	7	2, 5	☐
Mason-Building-Residential	3B-Jam-Z2R	2, 4, 8, 7, 9, 12, 39, 13, 49, 51, 54, 55	5	☐
Mason-Building	3B-Z3	15, 32	5	☐
Mason-Building	3B-Z3.Orleans	37		☐
Mason-Residential	3B-Z3R	15, 32	5	☐
Mason-Residential	3B-Z3R.Orleans	37		☐
Mason-Heavy Highway	3h	2, 4, 8, 7, 9, 12, 13, 19, 26, 28, 35, 37, 39, 49, 50, 51, 54, 55, 59, 61, 62	5, 15, 32	☐
Mason-Tile Finisher	3TF-Z1	19, 26, 28, 35, 50, 59, 61, 62		☐
Mason-Tile Finisher	3TF-Z2	2, 4, 8, 7, 9, 12, 13, 39, 49, 51, 54, 55	5	☐
Mason-Tile Finisher	3TF-Z3	15, 32, 37	5	☐
Mason-Tile Finisher	3TF-Z1R	19, 26, 28, 35, 50, 59, 61, 62		☐
Mason-Tile Finisher	3TF-Z2R	2, 4, 7, 9, 12, 13, 39, 49, 51, 54, 55	5	☐
Mason-Tile Finisher	3TF-Z3R	15, 32, 37	5	☐
Mason-Tile Setter	3TS-Z1	19, 26, 28, 35, 50, 59, 61, 62		☐
Mason-Tile Setter Residential	3TS-Z1R	19, 26, 28, 35, 50, 59, 61, 62		☐
Mason-Tile Setter	3TS-Z2	2, 4, 7, 8, 9, 12, 13, 39, 49, 51, 54, 55	5	☐
Mason-Tile Setter Residential	3TS-Z2R	2, 4, 7, 8, 9, 12, 13, 39, 49, 51, 54, 55	5	☐
Mason-Tile Setter Residential	3TS-Z3R	15, 32, 37	5	☐
Mason - Building/Heavy&Highway	780	3, 24, 30, 31, 41, 43, 52		☐
Operating Engineer - Heavy/Highway	137H/H	40, 60	14	☐
Operating Engineer - Heavy& Highway	158-832H	2, 8, 26, 28, 35, 49, 51, 59, 62	19	☐
Operating Engineer - Heavy& Highway	158-H/H	1, 4, 9, 10, 11, 14, 16, 17, 18, 20, 21, 22, 29, 39, 42, 46, 47, 48, 54, 57, 58		☐
Operating Engineer - Heavy& Highway	158-545h	6, 12, 23, 25, 27, 33, 38, 45, 50, 55		☐
Painter	1456-LS	1, 3, 10, 11, 14, 16, 17, 18, 20, 21, 24, 29, 30, 31, 36, 40, 41, 42, 43, 44, 46, 47, 48, 52, 53, 56, 57, 58, 60		☐
Painter	150	28, 59, 62	26, 35	☐

Job Classification Checklist

(Place a checkmark by all classifications that will be using the 4/10 schedule)

**** Do not write in any additional Classifications or Counties****

Job Classification	Tag #	Entire Counties	Partial Counties	Check Box
Painter	178 B	4, 9, 54		☐
Painter	178 E	8, 49	51	☐
Painter	178 I	12, 55		☐
Painter	178 O	13, 39		☐
Painter	31	6, 22, 27, 33, 34, 50	25, 35, 38	☐
Painter	38.O		38	☐
Painter	38.W	23, 45	25	☐
Painter	4-Buf,Nia,Olean	2, 15, 19, 32, 37, 61	5, 7, 26, 51	☐
Painter	4-Jamestown		5, 7	☐
Painter	38.O		38	☐
Painter	38.W	23, 45	25	☐
Painter	4-Buf,Nia,Olean	2, 15, 19, 32, 37, 61	5, 7, 26, 51	☐
Painter	4-Jamestown		5, 7	☐
Sheetmetal Worker	46	26, 28, 35, 50, 59, 62		☐
Sheetmetal Worker	46r	26, 28, 35, 50, 59, 62		☐
Teamsters-Heavy&Highway	294h/h	1, 11, 18, 20, 29, 42, 46, 47, 48, 58	57	☐
Teamsters-Heavy&Highway	317bhh	6, 12, 50, 51, 55, 62	2	☐
Teamsters-Building/Heavy&Highway	456	40, 60		☐

Introduction to the Prevailing Rate Schedule

Information About Prevailing Rate Schedule

This information is provided to assist you in the interpretation of particular requirements for each classification of worker contained in the attached Schedule of Prevailing Rates.

Classification

It is the duty of the Commissioner of Labor to make the proper classification of workers taking into account whether the work is heavy and highway, building, sewer and water, tunnel work, or residential, and to make a determination of wages and supplements to be paid or provided. It is the responsibility of the public work contractor to use the proper rate. If there is a question on the proper classification to be used, please call the district office located nearest the project. District office locations and phone numbers are listed below.

Prevailing Wage Schedules are issued separately for "General Construction Projects" and "Residential Construction Projects" on a county-by-county basis.

General Construction Rates apply to projects such as: Buildings, Heavy & Highway, and Tunnel and Water & Sewer rates.

Residential Construction Rates generally apply to construction, reconstruction, repair, alteration, or demolition of one family, two family, row housing, or rental type units intended for residential use.

Some rates listed in the Residential Construction Rate Schedule have a very limited applicability listed along with the rate. Rates for occupations or locations not shown on the residential schedule must be obtained from the General Construction Rate Schedule. Please contact the local Bureau of Public Work office before using Residential Rate Schedules, to ensure that the project meets the required criteria.

Paid Holidays

Paid Holidays are days for which an eligible employee receives a regular day's pay, but is not required to perform work. If an employee works on a day listed as a paid holiday, this remuneration is in addition to payment of the required prevailing rate for the work actually performed.

Overtime

At a minimum, all work performed on a public work project in excess of eight hours in any one day or more than five days in any workweek is overtime. However, the specific overtime requirements for each trade or occupation on a public work project may differ. Specific overtime requirements for each trade or occupation are contained in the prevailing rate schedules.

Overtime holiday pay is the premium pay that is required for work performed on specified holidays. It is only required where the employee actually performs work on such holidays.

The applicable holidays are listed under HOLIDAYS: OVERTIME. The required rate of pay for these covered holidays can be found in the OVERTIME PAY section listings for each classification.

Supplemental Benefits

Particular attention should be given to the supplemental benefit requirements. In most cases the payment or provision of supplements is for each hour worked (noted in the schedule as 'Per hour worked'). Some classifications require the payment or provision of supplements for each hour paid (noted in the schedule as 'Per hour paid'), which require supplements to be paid or provided at a premium rate for premium hours worked. Some classifications may also require the payment or provision of supplements for paid holidays on which no work is performed.

Effective Dates

When you review the schedule for a particular occupation, your attention should be directed to the dates above the column of rates. These are the dates for which a given set of rates is effective. The rate listed is valid until the next effective rate change or until the new annual determination which takes effect on July 1 of each year. All contractors and subcontractors are required to pay the current prevailing rates of wages and supplements. If you have any questions please contact the Bureau of Public Work or visit the New York State Department of Labor website (www.labor.state.ny.us) for current wage rate information.

Apprentice Training Ratios

The following are the allowable ratios of registered Apprentices to Journey-workers.

For example, the ratio 1:1,1:3 indicates the allowable initial ratio is one Apprentice to one Journeyworker. The Journeyworker must be in place on the project before an Apprentice is allowed. Then three additional Journeyworkers are needed before a second Apprentice is allowed. The last ratio repeats indefinitely. Therefore, three more Journeyworkers must be present before a third Apprentice can be hired, and so on.

Please call Apprentice Training Central Office at (518) 457-6820 if you have any questions.

Title (Trade)	Ratio
Boilermaker (Construction)	1:1,1:4
Boilermaker (Shop)	1:1,1:3
Carpenter (Bldg.,H&H, Pile Driver/Dockbuilder)	1:1,1:4
Carpenter (Residential)	1:1,1:3

Electrical (Outside) Lineman	1:1,1:2
Electrician (Inside)	1:1,1:3
Elevator/Escalator Construction & Modernizer	1:1,1:2
Glazier	1:1,1:3
Insulation & Asbestos Worker	1:1,1:3
Iron Worker	1:1,1:4
Laborer	1:1,1:3
Mason	1:1,1:4
Millwright	1:1,1:4
Op Engineer	1:1,1:5
Painter	1:1,1:3
Plumber & Steamfitter	1:1,1:3
Roofer	1:1,1:2
Sheet Metal Worker	1:1,1:3
Sprinkler Fitter	1:1,1:2

If you have any questions concerning the attached schedule or would like additional information, please contact the nearest BUREAU of PUBLIC WORK District Office or write to:

New York State Department of Labor
Bureau of Public Work
State Office Campus, Bldg. 12
Albany, NY 12240

District Office Locations:	Telephone #	FAX #
Bureau of Public Work - Albany	518-457-2744	518-485-0240
Bureau of Public Work - Binghamton	607-721-8005	607-721-8004
Bureau of Public Work - Buffalo	716-847-7159	716-847-7650
Bureau of Public Work - Garden City	516-228-3915	516-794-3518
Bureau of Public Work - Newburgh	845-568-5287	845-568-5332
Bureau of Public Work - New York City	212-932-2419	212-775-3579
Bureau of Public Work - Patchogue	631-687-4882	631-687-4902
Bureau of Public Work - Rochester	585-258-4505	585-258-4708
Bureau of Public Work - Syracuse	315-428-4056	315-428-4671
Bureau of Public Work - Utica	315-793-2314	315-793-2514
Bureau of Public Work - White Plains	914-997-9507	914-997-9523
Bureau of Public Work - Central Office	518-457-5589	518-485-1870

SAMPLE AGREEMENT

NEW YORK STATE THRUWAY AUTHORITY

SAMPLE AGREEMENT

CONTRACT NO:

This **AGREEMENT**, entered into this _____day of_____ 201___, by the **NEW YORK STATE THRUWAY AUTHORITY** (hereinafter referred to as the "**AUTHORITY**") having its principal office at 200 Southern Boulevard, Albany, NY 12209 in the County of Albany and State of New York and

☐ a corporation organized and existing under the laws of the State of

☐ a partnership, consisting of

☐ an individual conducting business as

the location of whose principal office is

hereinafter called the "**CONTRACTOR**".

WITNESSETH: That the Authority and the Contractor for the consideration hereinafter named agree as follows**:**

ARTICLE 1. WORK TO BE DONE. The Contractor shall (a) furnish all the materials, appliances, tools and labor of every kind required, and construct and complete in the most substantial and skillful manner, the construction, improvement or reconstruction of the project on or before the completion date of as further described in ARTICLE 4, and as generally identified and shown on the plans entitled: in the Division of the New York State Thruway in County(s) which constitutes Contract in accordance with the "Standard Specifications" of the New York State Department of Transportation, which contain the information for bidders; form of proposal, agreement, and bonds; general specifications and conditions or contract; materials of construction; and payment Items; and (b) do everything required by the Contract (Contract Documents) as defined herein. The contract closing date, used to keep the contract open for final processing and payment purposes after the completion date is .

The Contractor agrees that its proposal contained herein is based upon performing all the work of the Contract in accordance with a schedule that will result in the completion of the total works by the Date of Completion of the Contract and all intermediate stage and phase completion requirements of the contract, while adhering to all restrictions set forth in the Schedule and Suspension of Work, the Thruway Traffic Plan, and the General and Special Notes, and that the work will be performed at the unit bid prices, as shown on the contract documents and as detailed in the specifications and notes, utilizing the Labor Force, Qualified Disadvantaged, Women Owned and Minority Owned Subcontractor Entrepreneurs and Methods and Materials of Construction as described in the Contract Documents and any incorporated Addenda thereto, and conduct its operations in accordance with the Vehicle and Traffic Law, the Rules and Regulations of the NYS Thruway Authority, and the Thruway Operating Rules and General and Special Notes that are part of this proposal. The Contractor further agrees its proposal is not based upon the assumption that any specifications, traffic restrictions, scheduling or phasing/staging requirements will be waived, an extension of Contract Completion Date will be granted, a labor dispensation will be granted, substitution of non-approved products, alternatives or claimed functional equivalents for Specified Construction Materials and Methods will be allowed, or any Value Engineering Proposals will be entertained and approved by the New York State Thruway Authority, and any requests for a substitution, equivalent or alternate, which it proposes, will be accompanied by an agreed price analysis establishing an applicable credit or illustrating cost equal to or greater than the bid amount.

ARTICLE 2. DOCUMENTS FORMING THE CONTRACT. The Contract (and Contract Documents) shall be deemed to include the advertisement for proposals; the contractor's proposal; the Schedule for Participation By Disadvantaged Business Enterprise Participation goals; the agreement; the "Standard Specifications" including all addenda thereto referred to above; the plans; any addenda and/or amendments to specifications if the same are issued prior to date of receipt of proposal and all provisions required by law to be inserted in the contract whether actually inserted or not. Appendix A, standard clauses for all N.Y State contracts, is attached hereto and is hereby made a part of this agreement as if set forth fully herein.

ARTICLE 3. EXAMINATION OF DOCUMENTS AND SITE. The Contractor agrees that before making its proposal it carefully examined the contract documents, together with the site of the proposed work, as well as its surrounding territory, and is informed regarding all of the conditions affecting the work to be done and labor and materials to be furnished for the completion of this contract, including the existence of poles, wires, pipes, and other facilities and structures of municipal and other public service corporations on, over or under the site, except latent conditions that meet the requirements of §104-04 and §109-05, and that its information was secured by personal investigation and research.

ARTICLE 4. DATE OF COMPLETION. The Contractor further agrees that it will begin the work herein embraced within ten days of the effective date hereof, unless the consent of the Authority, in writing, is given to begin at a later date, and that it will prosecute the same so that it shall be entirely completed and performed on or before the completion date shown in Article 1.

No extension beyond the date of completion fixed by the terms of this contract shall be effective unless in writing signed by the Authority. Such extension shall be for such time and upon such terms and conditions as shall be fixed by the Authority, which may include the assessment of liquidated damages and a charge for engineering and inspection expenses actually incurred upon the work, including engineering and inspection expenses incurred upon the work by railroad companies on contracts for grade crossing elimination. Notice of application for such extension shall be filed with the Chief Engineer, Department of Engineering of the Authority at least fifteen days prior to the date of completion fixed by the terms of this agreement.

ARTICLE 5. ALTERATIONS AND OMISSIONS. The said work shall be performed in accordance with the true intent and meaning of the contract documents without any further expense of any nature whatsoever to the Authority other than the consideration named in this agreement.

The Authority reserves the right at any time during the progress of the work, to alter the plans or omit any portion of the work as it may deem reasonably necessary for the public interest; making allowances for additions and deductions with compensation made in accordance with the Standard Specifications, for this work without constituting grounds for any claim by the contractor for allowance for damages or for loss of anticipated profits, or for any variations between the approximate quantities and the quantities of the work as done.

ARTICLE 6. NO COLLUSION OR FRAUD. The Contractor hereby agrees that the only person or persons interested as principal or principals in the bid or proposal submitted by the Contractor for this contract are named therein, and that no person other than those mentioned therein has any interest in the above-mentioned proposal or in securing of the award, and that this contract has been secured without any connection with any person or persons other than those named, and that the proposal is in all respects fair and was prepared and the contract was secured without collusion or fraud and that neither any officer nor employee of the New York State Thruway Authority or the State Department of Transportation or either of them has or shall have a financial interest in the performance of the contract or in the supplies, work or business to which it relates, or in any portion of the profits thereof. (See also Section 139-a and 139-b of the State Finance Law referred to in the Standard Specifications, which are made a part of this contract.)

ARTICLE 7. CONTRACT PAYMENTS. As the work progresses in accordance with the contract and in a manner that is satisfactory to the Authority, the Authority hereby agrees to make payments to the Contractor therefor, based upon the proposal attached hereto and made a part hereof, as follows: The Authority shall, once in each month and on such days as it may fix, make an estimate of the quantity of work done and of material which has actually been put in place in accordance with the terms and conditions of the contract, during the preceding month, and compute the value thereof and pay to the Contractor the moneys due in accordance with Public Authorities Law Section 2880, as detailed in 21 NYCRR Part 109 (Prompt Payment). No monthly estimate shall be rendered unless the Contractor has provided acceptable documentation with regard to actions taken to comply with the M/WBE goals of the contract (see also §109-06 Contract Payments) and the value of the work done equals 5% of the contract amount or $1,000, whichever is the lesser. Semi-monthly estimates may be rendered provided (a) the value of the work performed in two successive weeks

is more than $100,000 or (b) the Chairman of the Authority deems it to be for the best interest of the Authority to do so. When a performance bond is approved, 5% shall be retained from each progress payment or estimate until final acceptance of the work.

ARTICLE 8. NO PAYMENT DUE TO CONTRACTOR'S NON-COMPLIANCE. It is further agreed that so long as any lawful or proper direction concerning the work or material given by the Chief Engineer, Department of Engineering of the New York State Thruway Authority, or his/her representative, shall remain uncomplied with, the Contractor shall not be entitled to have any estimate made for the purpose of payment, nor shall any estimate be rendered on account of work done or material furnished until such lawful or proper direction aforesaid has been fully and satisfactorily complied with.

ARTICLE 9. FINAL ACCEPTANCE OF WORK. When in the opinion of the Thruway Division Director, a Contractor has fully performed the work under the contract, the Thruway Division Director shall recommend to the Chief Engineer, Department of Engineering of the New York State Thruway Authority, the acceptance of the work so completed. If the Chief Engineer, Department of Engineering accepts the recommendation of the Thruway Division Director, he/she shall thereupon by letter notify the Contractor of such acceptance, and similarly to Subdivision 7, section 38 of the Highway Law, release up to 70% of the money held as retainage. Copies of such acceptance shall be sent to other interested parties. Prior to final acceptance of the work by the Chief Engineer, Department of Engineering of the New York State Thruway Authority or a designee, the contract work may be inspected, accepted and approved by other agencies and/or municipalities who will have jurisdiction of the work after final acceptance.

Final acceptance shall be final and conclusive except for defects not readily ascertainable by the New York State Thruway Authority, actual or constructive, fraud, gross mistakes amounting to fraud or other errors which the Contractor knew or should have known about as well as the New York State Thruway Authority's rights under any warranty or guarantee. Final acceptance may be revoked by the New York State Thruway Authority at any time prior to the issuance of the final check, upon the New York State Thruway Authority's discovery of such defects, mistakes, fraud or errors in the work.

ARTICLE 10. FINAL PAYMENT. After the final acceptance of the work, the Engineer shall prepare a final agreement of the work performed and the materials placed and shall compute the value of such work and materials under and according to the terms of the contract. This agreement shall be certified, as to its correctness, by the Engineer. Upon approval of such final agreement by the Director, Office of Construction Management, it shall be submitted to the Chief Engineer, Department of Engineering for final approval. The right, however, is hereby reserved to the Chief Engineer, Department of Engineering to reject the whole or any portion of the final agreement, should the said certificate of the Engineer be found or known to be inconsistent with the terms of the agreement or otherwise improperly given. All certificates, upon which partial payments may have been made being merely estimates, shall be subject to correction in the final certificate or final agreement.

ARTICLE 11. RIGHT TO SUSPEND WORK AND CANCEL CONTRACT. It is further mutually agreed that if at any time during the prosecution of the work the Authority shall determine that the work upon the contract is not being performed according to the contract or for the best interest of the Authority, the execution of the work by the Contractor may be temporarily suspended by the Chief Engineer, Department of Engineering, who may then proceed with the work under its own direction in such manner as will accord with the contract specifications and be for the best interests of the Authority; or he/she may terminate the contractor's employment under the contract while it is in progress, and thereupon proceed with the work, in affirmance of the contract, by contract negotiated or publicly let, by the use of its own forces, by calling upon the surety to complete the work in accordance with the plans and specifications or by a combination of any such methods; or he/she may cancel the contract and either readvertise and relet in accordance with the provisions of Section 38 of the Highway Law, or complete the work under its own direction in such manner as will accord with the contract specifications and be for the interests of the Authority; any excess in the cost of completing the contract beyond the price for which it was originally awarded shall be charged to and paid by the Contractor failing to perform the work or its surety; all in pursuance of the provisions of Section 40 of the Highway Law.

Whenever the New York State Thruway Authority determines to suspend or stop work under the contract, a written notice sent by mail to the Contractor at its address and to the sureties at their respective addresses, shall be sufficient notice of its action in the premises.

The Thruway Authority reserves the right to terminate this contract in the event that the certification provided by the Contractor in regard to compliance with New York State Finance Law Section 139-j and 139-k was intentionally false or intentionally incomplete.

ARTICLE 12. DETERMINATION AS TO VARIANCES. In any case of any ambiguity in the plans, specifications or maps, or between any of them, the matter must be immediately submitted to the Chief Engineer, Department of Engineering, who shall adjust the same, and his/her decision in relation thereto shall be final and conclusive upon the parties.

ARTICLE 13. SUCCESSORS AND ASSIGNS. This agreement shall bind the successors, assigns and representatives of the parties hereto.

ARTICLE 14. INTERNATIONAL BOYCOTT PROHIBITION. In accordance with Chapter 406 of the Laws of 1981, the Contractor hereby promises, asserts and represents that neither the Contractor nor any substantially owned or affiliated person, firm, partnership or corporation has participated, is participating or shall participate in an international boycott in violation of the provisions of the United States Export Administration Act of 1969, as amended, or the United States Export Administration Act of 1979, or the effective Regulations of the United States Department of Commerce promulgated under either act.

It is understood further that the Authority in awarding a contract does so in material reliance upon the promise and representation made by the Contractor in the foregoing paragraph and that such contract shall be rendered forfeit and void by the State Comptroller if subsequent to the bid execution date, the Contractor or such owned or affiliated person, firm, partnership or corporation has been convicted of a violation of the aforesaid Acts or Regulations or has been found upon final determination of the United States Commerce Department or any other appropriate agency of the United States to have violated such Acts or Regulations.

The Contractor agrees to and shall notify the Chief Engineer, Department of Engineering and the Director of the Office of Construction Management and the Director of State Expenditures in the Office of the State Comptroller of any such conviction or final determination of violation within five (5) days thereof.

ARTICLE 15. CERTIFICATION OF STATE FINANCE LAW SECTIONS 139-J AND 139-K. By execution of this agreement the Contractor certifies that all information provided with respect to New York State Finance Law Section 139-j and Section 139-k is complete, true and accurate.

Contract Number:

In addition to the acceptance of this contract, I also certify that original copies of this signature page will be attached to all other exact copies of this contract.

IN-WITNESS WHEREOF, the parties hereto have executed this agreement on the day and year first above written.

By**:** _____
Chief Engineer

_____
Date

_____
Contractor

Approved as to form

_____
New York State Attorney General

Approved:

Thomas P. DiNapoli
State Comptroller

By: _____

Date: _____

(Acknowledgment by individual contractor)

STATE OF NEW YORK

COUNTY OF _____ ss.:

On this _____ day of _____, 201__, before me personally came _____ to me known and known to me to be the person described in and who executed the foregoing instrument, and acknowledged that he executed the same.

_____
Notary Public County

(Acknowledgment by co-partnership contractor)

STATE OF NEW YORK

COUNTY OF _____ ss.:

On this _____ day of _____, 201__ before me personally came and appeared _____ to me known and known to me to be the person who executed the above instrument, who, being sworn by me, did for himself depose and say that he is a member of the firm of _____ consisting of himself and _____ and that he executed the foregoing instrument in the firm name of _____ and that he had authority to sign same, and he did duly acknowledge to me that he executed the same as the act and deed of said firm of _____, for the uses and purposes mentioned therein.

_____
Notary Public County

(Acknowledgement of a Corporation)

STATE OF NEW YORK

COUNTY OF _____ ss.:

On this _____day of _____, 201__,
before me personally came _____, to me known and known to me to be the person who executed the above instrument, who being duly sworn by me, did depose and say that he/she resides in _____, that he/she is the _____ of _____, the corporation described in and which executed the above instrument, and that he/she signed his/her name thereto on behalf of said Corporation by order of the Board of Directors of said Corporation.

_____
Notary Public