TAB 16-26C

REVIEWED BY

PROJECT MANAGER

BUREAU DIRECTOR

NEW YORK STATE THRUWAY AUTHORITY
NEW YORK STATE CANAL CORPORATION

BUFFALO DIVISION

PROPOSAL FOR

REPAIR

OF THE

LOCK E-32 BYPASS CULVERT

AT

MILEPOST E-409.30

ON THE

ERIE CANAL

IN

MONROE COUNTY

72 SHEETS

TAB 16-26C

D214401

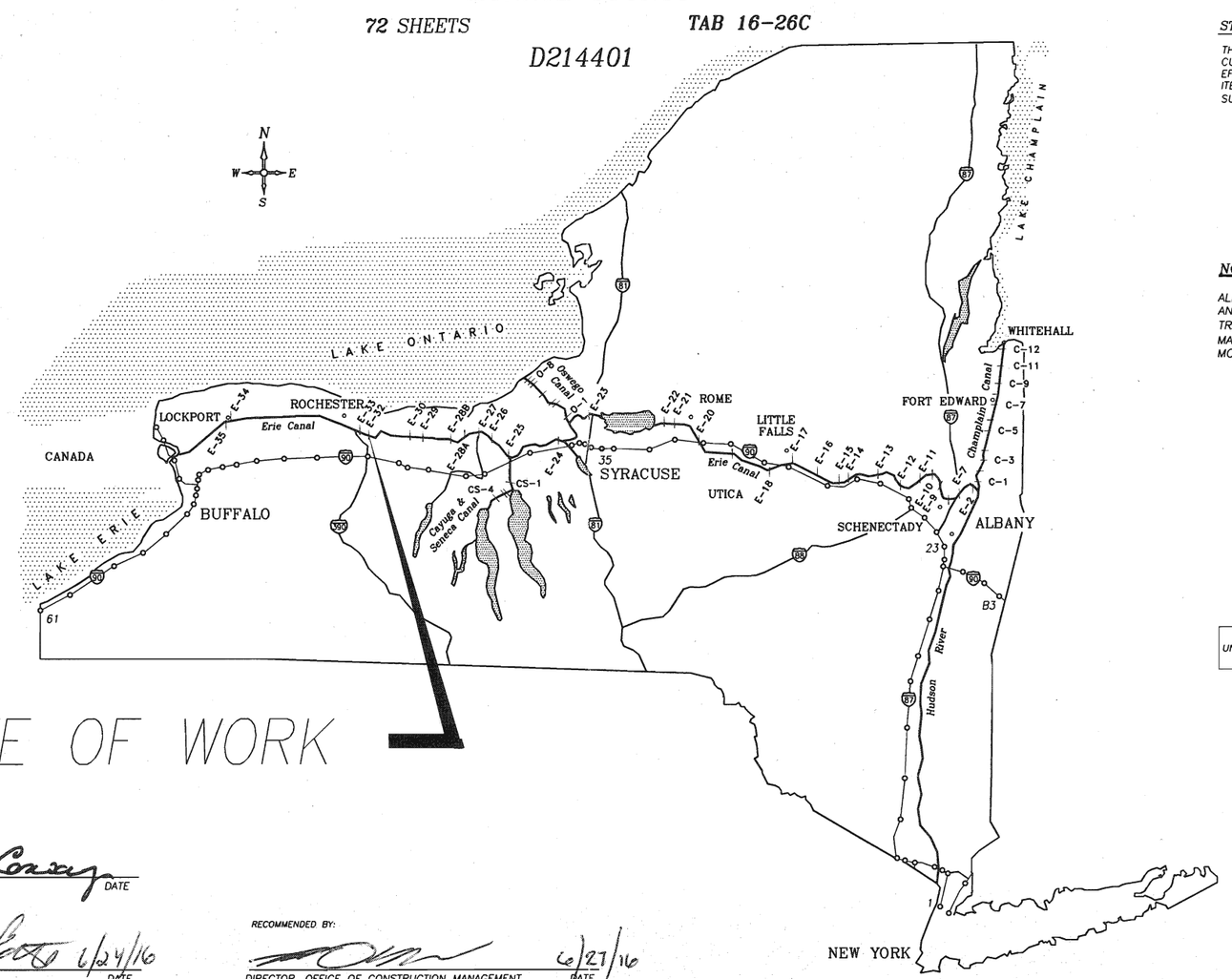

SITE OF WORK

TYPE OF CONSTRUCTION:

REMOVAL OF EXISTING CONCRETE
REMOVAL OF EXISTING VALVE MACHINERY
INSTALLATION OF NEW VALVE THIMBLE AND LINING
INSTALLATION OF REINFORCED CONCRETE
REPAIR OF CULVERT TUNNEL
REINSTALLATION OF VALVE MACHINERY

STANDARD SHEETS:

THE LATEST REVISIONS OF THE STANDARD SHEETS MAINTAINED BY NYSDOT, WHICH ARE CURRENT ON THE DATE OF ADVERTISEMENT FOR BIDS SHALL BE CONSIDERED TO BE IN EFFECT. ALL PAY ITEMS AND WORK CONTAINED IN THE CONTRACT AND ANY ADDITIONAL PAY ITEMS AND WORK ENCOUNTERED DURING THE COURSE OF THE CONTRACT SHALL BE SUBJECT TO THE APPLICABLE STANDARD SHEET(S) LISTED ON DWG. GN-1.

NOTES:

ALL WORK CONTEMPLATED UNDER THIS CONTRACT IS TO BE GOVERNED BY AND IN CONFORMANCE WITH THE NEW YORK STATE DEPARTMENT OF TRANSPORTATION'S "STANDARD SPECIFICATIONS – CONSTRUCTION AND MATERIALS U.S. CUSTOMARY UNITS" ADOPTED MAY 1, 2008 EXCEPT AS MODIFIED IN THESE PLANS AND BY THE PROPOSAL.

DIG SAFELY NEW YORK
UNDERGROUND FACILITIES PROTECTION ORGANIZATION
CALL 811

CONTRACTOR'S NAME: .....
AWARD DATE: .....
COMPLETION DATE: .....
FINAL ACCEPTANCE DATE: .....
INSPECTION FIRM'S NAME: .....
RESIDENT ENG./EIC: .....
FINAL COST TOTAL: .....

FISCAL SHARE	COST(S)

INSPECTION FIRM CONSULTANT STAMP:

RECOMMENDED BY:
Timothy R. Cassey
DIRECTOR, OFFICE OF DESIGN — DATE

RECOMMENDED BY:
DIVISION CANAL ENGINEER — 6/24/16 DATE

RECOMMENDED BY:
TRAFFIC ENGINEER — 6/28/16 DATE

RECOMMENDED BY:
DIRECTOR, OFFICE OF CONSTRUCTION MANAGEMENT — 6/27/16 DATE

RECOMMENDED BY
Thomas E. Lee — 6/28/16
DEPUTY CHIEF ENGINEER — DATE

RECOMMENDED BY:
DIRECTOR
NEW YORK STATE CANAL CORPORATION — DATE

APPROVED BY:
CHIEF ENGINEER — 6/28/16 DATE

INDEX OF DRAWINGS

DRAWING NUMBER	TITLE OF DRAWING	SHEET #
–	TITLE SHEET	–
LP-1	DRAWING INDEX AND LOCATION PLAN	2
EQ-1	ESTIMATE OF QUANTITIES	3
GN-1	GENERAL NOTES I	4
GN-2	GENERAL NOTE II	5
ST-1	METAL FABRICATION NOTES I	6
ST-2	METAL FABRICATION NOTES II	7
ST-3	TABLE OF METALS	8
SP-1	SITE PLAN	9
MPT-1	WORK ZONE TRAFFIC CONTROL PLAN	10
GP-1	GENERAL PLAN I	11
GP-2	GENERAL PLAN II	12
GP-3	GENERAL PLAN III	13
GP-4	GENERAL PLAN IV	14
EX-1	EXCAVATION DETAILS I	15
EE-1	EXISTING ELEVATION I	16
EE-2	EXISTING ELEVATION II	17
EE-3	EXISTING ELEVATION III	18
EE-4	EXISTING ELEVATION IV	19
ED-1	EXISTING C.I. LINING DETAILS	20
ED-2	EXISTING C.I. LINING SECTIONS	21
ED-3	EXISTING BYPASS VALVE I	22
ED-4	EXISTING BYPASS VALVE II	23
ED-5	EXISTING SECTIONS I	24
ED-6	EXISTING SECTIONS II	25
CR-1	CONCRETE REMOVAL DETAILS I	26
CR-2	CONCRETE REMOVAL DETAILS II	27
CR-3	CONCRETE REMOVAL DETAILS III	28
CR-4	CONCRETE REMOVAL DETAILS IV	29
CR-5	CONCRETE REMOVAL DETAILS V	30
CR-6	CONCRETE REMOVAL DETAILS VI	31
CR-7	CONCRETE REMOVAL DETAILS VII	32
CR-8	CONCRETE REMOVAL DETAILS VIII	33
CR-9	CONCRETE REMOVAL DETAILS IX	34
CR-10	CONCRETE REMOVAL DETAILS X	35
CR-11	CONCRETE REMOVAL DETAILS XI	36
CR-12	CONCRETE REMOVAL DETAILS XII	37
CP-1	CONCRETE AND REINFORCEMENT PLACEMENT DETAILS I	38
CP-2	CONCRETE AND REINFORCEMENT PLACEMENT DETAILS II	39
CP-3	CONCRETE AND REINFORCEMENT PLACEMENT DETAILS III	40
CP-4	CONCRETE AND REINFORCEMENT PLACEMENT DETAILS IV	41
CP-5	CONCRETE AND REINFORCEMENT PLACEMENT DETAILS V	42
CP-6	CONCRETE AND REINFORCEMENT PLACEMENT DETAILS VI	43
CP-7	CONCRETE AND REINFORCEMENT PLACEMENT DETAILS VII	44
CP-8	CONCRETE AND REINFORCEMENT PLACEMENT DETAILS VIII	45
CP-9	CONCRETE AND REINFORCEMENT PLACEMENT DETAILS IX	46
CP-10	CONCRETE AND REINFORCEMENT PLACEMENT DETAILS X	47
CP-11	CONCRETE AND REINFORCEMENT PLACEMENT DETAILS XI	48
CP-12	CONCRETE AND REINFORCEMENT PLACEMENT DETAILS XII	49
CP-13	CONCRETE AND REINFORCEMENT PLACEMENT DETAILS XIII	50
CP-14	CONCRETE AND REINFORCEMENT PLACEMENT DETAILS XIV	51
CP-15	CONCRETE AND REINFORCEMENT PLACEMENT DETAILS XV	52
CP-16	CONCRETE AND REINFORCEMENT PLACEMENT DETAILS XVI	53
CP-17	CONCRETE AND REINFORCEMENT PLACEMENT DETAILS XVII	54
CP-18	CONCRETE AND REINFORCEMENT PLACEMENT DETAILS XVIII	55
CP-19	CONCRETE AND REINFORCEMENT PLACEMENT DETAILS IXX	56
CP-20	WATERSTOPS	57
CG-1	CULVERT GROUTING AND REPAIR DETAILS	58
CG-2	BRICK VOID REPAIR DETAILS	59
MA-1	MANHOLE ABANDONMENT AND PLUGGING DETAILS I	60
MA-2	MANHOLE ABANDONMENT AND PLUGGING DETAILS II	61
VA-1	VALVE THIMBLE AND SUPPORT FRAME DETAILS I	62
VA-2	VALVE THIMBLE AND SUPPORT FRAME DETAILS II	63
VA-3	VALVE HEADER AND GUIDE RAIL DETAILS I	64
VA-4	VALVE HEADER AND GUIDE RAIL DETAILS II	65
TR-1	TRASH RACK REPAIRS	66
IN-1	FILLING CULVERT INLET REPAIR DETAILS	67
BB-1	STANDARD BAR BENDS	68
BL-1	BAR LIST I	69
BL-2	BAR LIST II	70
BL-3	BAR LIST III	71
BL-4	BAR LIST IIII	72

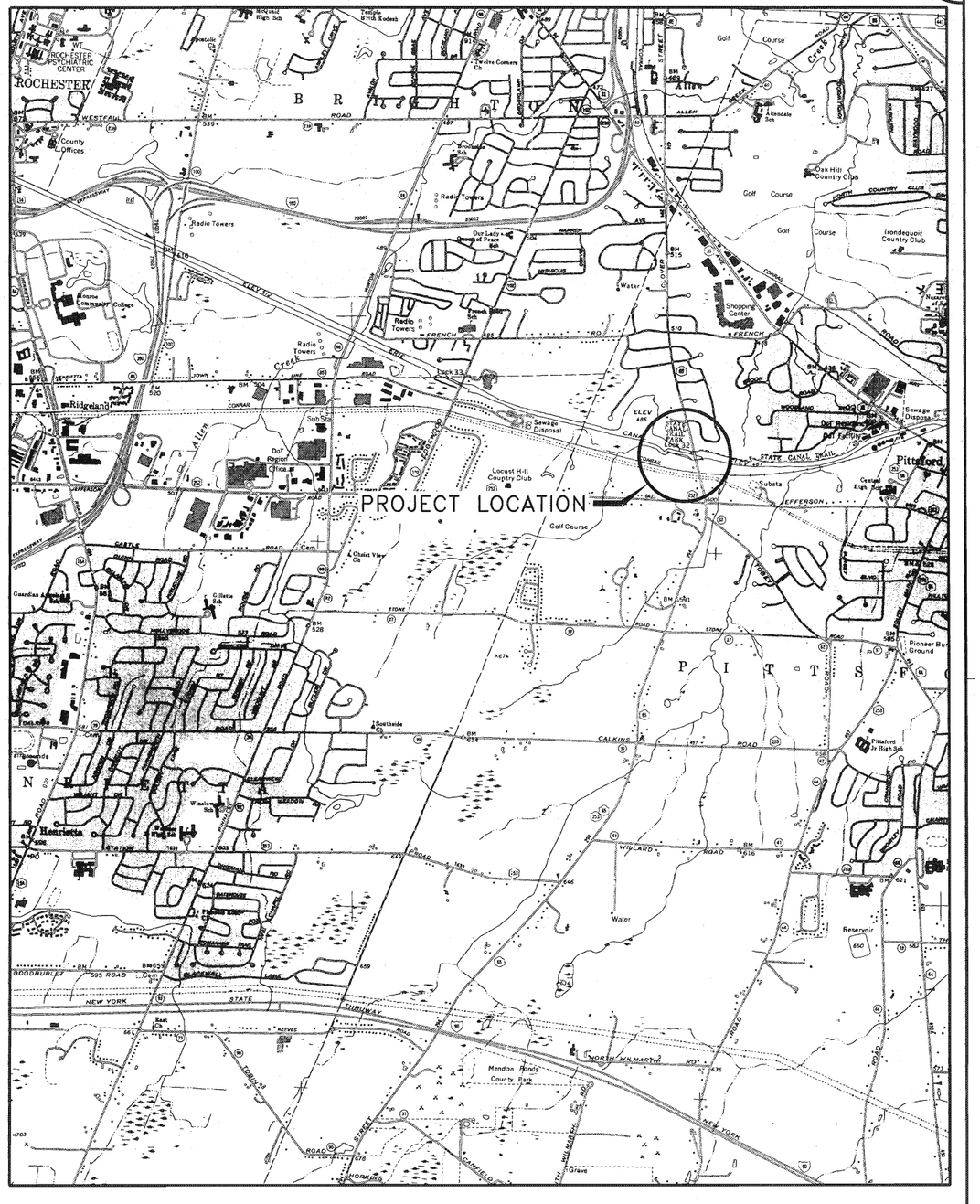

U.S.G.S. QUADRANGLE MAP P18
PITTSFORD
NOT TO SCALE

REVISIONS			
DATE	DESCRIPTION	BY	SYM.

NEW YORK STATE THRUWAY AUTHORITY
DEPARTMENT OF ENGINEERING
200 SOUTHERN BLVD., ALBANY, N.Y. 12209

TITLE OF PROJECT: LOCK E-32 BYPASS CULVERT REPAIR
LOCATION OF PROJECT: TOWN OF PITTSFORD MONROE COUNTY
TITLE OF DRAWING: DRAWING INDEX AND LOCATION PLAN

CONTRACT NUMBER: TAB 16-26C
DATE: 6/15/16
DRAWING NUMBER: LP-1

DESIGN SUPERVISOR: R. KARIS
DESIGNED BY: J.S. LeBLANC
DRAFTED BY: J.S. LeBLANC
CHECKED BY: D. HUDDA
D. HUDDA
2016\994058\Design\Plans\LOCK E-32 LOCATION PLAN AND INDEX OF DRAWINGS 20.dgn

ESTIMATE OF QUANTITIES

ITEM NUMBER	DESCRIPTION	UNIT	QUANTITY
202.92250112	SAMPLING AND ANALYSIS	EA	2.0
202.92560112	SITE HEALTH AND SAFETY MEASURES	LS	1.0
203.07	SELECT GRANULAR FILL	CY	1.0
206.01	STRUCTURE EXCAVATION	CY	921.0
553.010001	COFFERDAMS (TYPE 1)	EA	1.0
553.010002	COFFERDAMS (TYPE 1)	EA	1.0
553.010003	COFFERDAMS (TYPE 1)	EA	1.0
553.010004	COFFERDAMS (TYPE 1)	EA	1.0
555.0105	CONCRETE FOR STRUCTURES, CLASS A	CY	249.0
556.0110 25	GALVANIZED FABRIC REINFORCEMENT FOR STRUCTURES	SF	120.0
556.0201	UNCOATED BAR REINFORCEMENT FOR CONCRETE STRUCTURES	LB	16700.0
564.0501	STRUCTURAL STEEL, TYPE 1	LS	1.0
564.05015012	GALVANIZED STRUCTURAL STEEL	LS	1.0
564.0502	STRUCTURAL STEEL, TYPE 2	LS	1.0
564.05025012	GALVANIZED STRUCTURAL STEEL	LS	1.0
564.0503	STRUCTURAL STEEL, TYPE 3	LS	1.0
570.92410112	FIELD PAINTING CANAL APPURTENANCES (ATMOSPHERIC)	LS	1.0
570.92410212	FIELD PAINTING CANAL APPURTENANCES (ATMOSPHERIC)	LS	1.0
570.92930112	COATING SYSTEM FOR NEW STRUCTURAL STEEL ATMOSPHERIC SERVICE (SHOP APPLICATION)	LS	1.0
580.01	REMOVAL OF STRUCTURAL CONCRETE	CY	247.0
582.05	REMOVAL OF STRUCTURAL CONCRETE- REPLACEMENT WITH CLASS A CONCRETE	CY	1.0
582.06	REMOVAL OF STRUCTURAL CONCRETE - REPLACEMENT WITH CLASS D CONCRETE	SF	100.0
586.02 25	DRILLING AND GROUTING BOLTS OR REINFORCING BARS CONCRETE GROUT	EA	909.0
589.520001	REMOVAL OF EXISTING STEEL	EA	12.0
589.520002	REMOVAL OF EXISTING STEEL	EA	6.0
619.01	BASIC WORK ZONE TRAFFIC CONTROL	LS	1.0
620.0501 12	REMOVE,STORE AND PLACE EXISTING HEAVY STONE FILL	CY	19.0
637.12 25	ENGINEERS FIELD OFFICE -TYPE 2	MNTH	6.0
656.01	MISCELLANEOUS METALS	LB	1250.0

ESTIMATE OF QUANTITIES

ITEM NUMBER	DESCRIPTION	UNIT	QUANTITY
665.10100112	CASTING PATTERNS	EA	1.0
665.10151812	REMOVE AND STORE MISCELLANEOUS LOCK EQUIPMENT	LS	1.0
665.10151912	REINSTALL STORED LOCK EQUIPMENT	LS	1.0
665.15420012	VALVE AND COUNTERWEIGHT GUIDERAILS	LF	35.2
665.20040012	REMOVE AND STORE OPEN ALUMINUM FLOOR	SF	54.0
665.2009 12	STEEL GRATING	SF	58.5
665.2575 12	DRILLING HOLES FOR POLYURETHANE GROUTING	INCH	5500.0
665.25760125	BATCH, MIX / INJECT POLYURETHANE GROUT IN JOINTS AND VOIDS	GAL	30.0
665.4524 12	REMOVE AND STORE SNUBBING POSTS	EA	1.0
665.46030012	VALVE WELL SEAT, HEADER AND RAILS	EA	1.0
690.02000625	SPECIALTY WORK (PLUMBING AND GAS)	LF	16.0
697.0203 25	FIELD CHANGE ORDER (THRUWAY)	DC	92000.0
699.04 25	MOBILIZATION	LS	1.0

File

DESIGNED BY: TA

CHECKED BY: TA

DRAFTED BY: TA

CHECKED BY: TA

DESIGN SUPERVISOR: TA

REVISIONS

DATE	DESCRIPTION	BY	SYM.

NEW YORK STATE OF OPPORTUNITY. Thruway Authority | Canal Corporation

TITLE OF PROJECT: LOCK E-32 BYPASS CULVERT REPAIR

LOCATION OF PROJECT: TOWN OF PITTSFORD, MONROE COUNTY

TITLE OF DRAWING: ESTIMATE OF QUANTITIES

CONTRACT NUMBER: TAB 16-26C

DATE: 06/23/16

DRAWING NUMBER: EQ-1

2016\B94058\Design\Plans\LOCK E-32 GENERAL NOTES.dgn
CHECKED BY: D. HUDDA
DRAFTED BY: J.S. LeBLANC
DESIGNED BY: J.S. LeBLANC
CHECKED BY: D. HUDDA
DESIGN SUPERVISOR: R. KARIS

GENERAL NOTES:

G-1. DESIGN SPECIFICATIONS: CURRENT NEW YORK STATE DEPARTMENT OF TRANSPORTATION STANDARD SPECIFICATIONS FOR HIGHWAY BRIDGES WITH ALL INTERIM SPECIFICATIONS AND MODIFICATIONS, EXCEPT AS MODIFIED BY THE NEW YORK STATE THRUWAY AUTHORITY STRUCTURES DESIGN MANUAL – FOURTH EDITION.

G-2. MATERIAL AND CONSTRUCTION SPECIFICATIONS: STANDARD SPECIFICATIONS, CONSTRUCTION AND MATERIALS, NEW YORK STATE DEPARTMENT OF TRANSPORTATION, OFFICE OF ENGINEERING, DATED MAY 1, 2008, INCLUDING ADDENDA.

G-3. CONCRETE DATA: THE MINIMUM CONCRETE COMPRESSIVE STRENGTH (f'c) SHALL BE AS FOLLOWS (ALL STRENGTHS REFER TO 28 DAY TESTS): 3000 PSI – CLASS A.

G-4. RECORD PLANS: PLANS COVERING PREVIOUS WORK WILL BE AVAILABLE FOR REVIEW BY ALL PROSPECTIVE BIDDERS PRIOR TO THE LETTING DATE, AS SUPPLEMENTAL INFORMATION AVAILABLE FOR DOWNLOAD ON THE THRUWAY WEBSITE. REFER TO THE FOLLOWING CONTRACT: 23

G-5. THE CONTRACTOR SHALL CONDUCT OPERATIONS IN ACCORDANCE WITH ALL CURRENT LOCAL, STATE AND FEDERAL CODES COVERING SUCH OPERATIONS. THE CONTRACTOR IS REQUIRED TO COORDINATE WORK WITH CANAL MAINTENANCE FORCES AND OTHER CONTRACTORS, IF ANY. THE CONTRACTOR SHALL SCHEDULE OPERATIONS SO AS TO MINIMIZE DISRUPTION TO CANAL TRAFFIC.

G-6. THE COST OF FURNISHING AND INSTALLING ALL ANCHOR BOLTS SHALL BE INCLUDED IN VARIOUS ITEMS OF THE CONTRACT UNLESS OTHERWISE NOTED.

G-7. THE CONTRACTOR IS ADVISED THAT ADDITIONAL "NOTES" WILL BE FOUND ON SUBSEQUENT SHEETS OF THE CONTRACT PLANS. SUCH "NOTES", WHILE PERTAINING TO THE SPECIFIC SHEETS THEY ARE PLACED ON, ALSO SUPPLEMENT THE GENERAL NOTES LISTED HEREIN.

G-8. ADDITIONAL PAYMENT WILL NOT BE MADE FOR WORK CALLED FOR BY NOTES ON THE CONTRACT PLANS OR IN THE SPECIFICATIONS, UNLESS A PAYMENT IS SPECIFICALLY INDICATED BY AN ITEM NUMBER. THE COST OF WORK FOR WHICH A PAYMENT ITEM IS NOT INDICATED SHALL BE INCLUDED IN THE UNIT PRICES BID FOR THE VARIOUS ITEMS OF THE CONTRACT.

G-9. WHENEVER ITEMS IN THE CONTRACT REQUIRE MATERIALS TO BE REMOVED OR DISPOSED OF, THE COST OF SUPPLYING A DISPOSAL AREA AND TRANSPORTATION TO THE DISPOSAL AREA SHALL BE INCLUDED IN THE UNIT PRICE BID FOR THOSE ITEMS. FOR MATERIALS DISPOSED OUTSIDE OF THE PROJECT LIMITS, THE CONTRACTOR SHALL NOTIFY THE ENGINEER IN WRITING OF THE PROPOSED DISPOSAL SITE. THE CONTRACTOR SHALL COMPLY WITH ALL STATE AND LOCAL REGULATIONS THAT APPLY TO THE SITE CHOSEN FOR MATERIAL DISPOSAL. THE CONTRACTOR SHALL OBTAIN ALL PERMITS REQUIRED BY THE GOVERNING BODY OF THE DISPOSAL AREA.

G-10. THE CONTRACTOR SHALL VISIT THE SITE BEFORE BIDDING, TO BECOME FAMILIAR WITH THE FIELD CONDITIONS, AND TO JUDGE THE EXTENT AND NATURE OF THE WORK TO BE DONE UNDER THIS CONTRACT. EXTRA COMPENSATION WILL NOT BE PROVIDED TO THE CONTRACTOR DUE TO THE FAILURE TO INCLUDE IN THE CONTRACTOR'S BID, ALL ITEMS AND MATERIALS WHICH THE CONTRACTOR IS REQUIRED TO FURNISH IN ACCORDANCE WITH THE CONTRACT DOCUMENTS. THE CONTRACTOR IS ADVISED THAT A PERMIT FROM THE APPROPRIATE CANAL DIVISION OFFICE MAY BE REQUIRED FOR THE SITE VISIT.

G-11. THE CONTRACTOR SHALL NOT HOLD THE AUTHORITY RESPONSIBLE FOR DELAYS OR INCONVENIENCES WHICH MAY ARISE DUE TO ANY RELATED ASPECTS OF ANY CONCURRENT CONSTRUCTION PROJECTS, MAINTENANCE ACTIVITIES, OR EMERGENCY REPAIRS.

G-12. IT SHALL BE THE CONTRACTOR'S OBLIGATION AND RESPONSIBILITY TO USE METHODS AND EQUIPMENT WHICH WILL ENSURE THE SATISFACTORY COMPLETION OF THE REQUIRED WORK, WITH A MINIMUM OF DELAY.

G-13. ALL AREAS WHICH WERE INTENDED TO REMAIN UNDISTURBED, WHICH ARE SUBSEQUENTLY DISTURBED BY THE CONTRACTOR WITHOUT AUTHORIZATION FROM THE ENGINEER, SHALL BE RESTORED BY THE CONTRACTOR, TO THE SATISFACTION OF THE ENGINEER, AT NO EXPENSE TO THE AUTHORITY/CANAL CORPORATION.

G-14. THE CONTRACTOR SHALL BE REQUIRED TO PROTECT THE CONTRACTOR'S WORKERS AT ALL TIMES IN CONFORMANCE WITH APPLICABLE O.S.H.A. REGULATIONS.

CONCRETE REMOVAL NOTES:

CR-1. THE COST OF ALL SAWCUTTING OF CONCRETE SHALL BE INCLUDED IN THE CONCRETE REMOVAL ITEMS PROVIDED UNLESS OTHERWISE INDICATED.

CR-2. WHERE A MINIMUM DEPTH OF CONCRETE REMOVAL IS SPECIFIED ON THE PLANS, THE CONTRACTOR SHALL REMOVE TO THIS MINIMUM DEPTH AND SHALL BE PAID FOR CONCRETE REMOVAL TO THE MINIMUM DEPTH SHOWN ON THE PLANS. PAYMENT WILL NOT BE MADE FOR ADDITIONAL CONCRETE REMOVAL, CONCRETE, REINFORCING BARS, OR ANCHOR BOLT LENGTH CHANGES CAUSED BY THE CONTRACTOR'S REMOVAL OF CONCRETE BEYOND THE MINIMUM DEPTH SHOWN ON THE PLANS, UNLESS PRIOR APPROVAL FOR THE ADDITIONAL REMOVAL HAS BEEN GRANTED BY THE ENGINEER.

CONCRETE NOTES:

C-1. THE COST OF ALL JOINT MATERIAL SHALL BE INCLUDED IN THE UNIT PRICES BID FOR THE VARIOUS ITEMS OF THE CONTRACT UNLESS OTHERWISE SPECIFIED IN THE PLANS.

C-2. ALL FORMING HARDWARE SUCH AS TIES AND SUPPORT STEEL THAT ARE TO REMAIN IN CONCRETE SHALL BE GALVANIZED OR DIELECTRIC. COST TO BE INCLUDED IN THE UNIT PRICE BID FOR THE CONCRETE ITEMS.

C-3. THE CONTRACTOR, WITH THE APPROVAL OF THE CHIEF ENGINEER OR HIS DESIGNATED REPRESENTATIVE, MAY ELECT TO INTRODUCE CONSTRUCTION JOINTS AT LOCATIONS NOT SHOWN ON THE PLANS. THESE CONSTRUCTION JOINTS SHALL BE PROVIDED WITH SHEAR KEYS AND WATERSTOPS.

C-4. ALL EXPOSED EDGES OF CONCRETE ARE TO BE CHAMFERED 1" UNLESS OTHERWISE NOTED.

C-5. KEYWAYS SHALL BE UTILIZED AT ALL JOINTS BETWEEN POURS OF NEW CONCRETE.

C-6. IMMEDIATELY AFTER FORMS HAVE BEEN REMOVED FROM CAST-IN-PLACE CONCRETE POURS, SURFACES EXPOSED TO VIEW SHALL HAVE ALL PROJECTIONS AND IRREGULARITIES REMOVED AND ALL CAVITIES NEATLY FILLED WITH MORTAR OF THE PROPORTIONS USED IN THE CONCRETE. ALL OTHER REQUIREMENTS OF SUBSECTION 555-3.08 OF THE NEW YORK STATE DEPARTMENT OF TRANSPORTATION STANDARD SPECIFICATIONS, AND ALL SUBSEQUENT ADDENDA, AS NOTED ABOVE, SHALL ALSO APPLY.

REINFORCEMENT NOTES:

RS-1. THE MINIMUM COVER REQUIREMENT FOR ALL REINFORCEMENT SHALL BE 3 INCHES UNLESS OTHERWISE NOTED.

RS-2. THE MINIMUM EMBEDMENT DEPTH IS SHOWN ON THE PLANS FOR THE REINFORCING AND ANCHOR BOLTS DRILLED AND GROUTED IN EXISTING CONCRETE. ALL DRILLING AND GROUTING OF ANCHOR BOLTS AND REINFORCING STEEL WILL BE PAID UNDER ITEM 586.02----25. THE CONTRACTOR SHOULD BE AWARE THAT REINFORCING BAR AND ANCHOR BOLT LENGTHS MAY HAVE TO BE INCREASED FROM WHAT IS SHOWN ON THE PLANS IN ORDER TO ACHIEVE THE MINIMUM REQUIRED EMBEDDMENT DEPTH INTO SOUND CONCRETE. DO NOT FABRICATE DOWELS UNTIL DEMOLITION HAS BEEN COMPLETED, AND ACTUAL DOWEL LENGTH HAS BEEN DETERMINED. EXTRA PAYMENT FOR INCREASES IN DOWEL LENGTH DUE TO OVER DEMOLITION WILL NOT BE PROVIDED.

RS-3. UNLESS OTHERWISE INDICATED, GROUTED DOWELS SHALL BE INSTALLED IN A GRID PATTERN AT THE INDICATED ROW AND COLUMN SPACINGS.

RS-4. ALL METAL REINFORCING BAR CHAIRS AND SUPPORTS SHALL HAVE PLASTIC SHOES.

RS-5. BAR REINFORCEMENT SHALL CONFORM TO ASTM A615, GRADE 60, MEETING THE REQUIREMENTS OF MATERIAL SPECIFICATION 709-01, AND SHALL BE UNCOATED (BLACK BAR) OR GALVANIZED AS NOTED IN THE BAR LIST. COST SHALL BE INCLUDED IN ITEM 556.0201 OR 556.0203. BAR MARKS ARE ENGLISH DESIGNATIONS.

RS-6. EXISTING REINFORCING STEEL EXPOSED BY CONCRETE REMOVAL WHICH IS TO REMAIN IN THE STRUCTURE SHALL BE SANDBLAST CLEANED. CONCRETE SHALL BE REMOVED FROM THE REMAINING CIRCUMFERENCE OF THE BAR AT NO ADDITIONAL COST TO THE AUTHORITY/CANAL CORPORATION.

RS-7. EXISTING REINFORCEMENT STEEL TO REMAIN WHICH HAS BEEN DAMAGED SHALL BE REPLACED AT NO ADDITIONAL COST TO THE AUTHORITY/CANAL CORPORATION.

CONCRETE SURFACE TOLERANCES NOTES:

CT-1. FINISH TOLERANCES FOR CONCRETE CONSTRUCTION AND MATERIALS SHALL CONFORM TO ALL REQUIREMENTS OF ACI 117.10, EXCEPT AS SPECIFICALLY MODIFIED BY THE CONTRACT DOCUMENTS, AND AS CLARIFIED BELOW:

A. EXPOSED OR "VISIBLE" SURFACES ARE DEFINED AS ANY SURFACE THAT IS EXPOSED TO AIR OR WATER UPON PROJECT COMPLETION. AN EXAMPLE OF A "CONCEALED" SURFACE IS A FINISHED SURFACE THAT WILL BE COVERED WITH SOIL UPON PROJECT COMPLETION.

B. "DEVIATION FROM PLUMB", "HORIZONTAL DEVIATION", AND "VERTICAL DEVIATION" SHALL BE MEASURED AGAINST THE PLAN LINES, GRADES, CROSS SECTIONS, AND DIMENSIONS, REGARDLESS OF THE NUMBER OR SEQUENCE OF POURS.

C. "DEVIATION FROM PLUMB" AND "VERTICAL DEVIATION" SHALL BE LIMITED TO +/- 0.5 INCHES FOR EXPOSED SURFACES.

CT-2. CANAL STRUCTURES SHALL MEET THE REQUIREMENTS OF ACI 117-10 AS DESCRIBED IN NOTE CT-1, AND IN ACCORDANCE WITH THE FOLLOWING:

A. CONCRETE SURFACES OF STRUCTURES ON THE NEW YORK STATE CANAL SYSTEM SHALL MEET THE CAST-IN-PLACE BRIDGE REQUIREMENTS OF ACI 117-10, EXCEPT AS OTHERWISE NOTED.

B. TO MINIMIZE PONDING OF WATER, THE MAXIMUM GAP BELOW A 10 FOOT UNLEVELED STARAIGHTEDGE RESTING ON HIGH SPOTS OF ESSENTIALLY HORIZONTAL SURFACES SHALL NOT EXCEED 1/8".

C. THE CONCRETE (OR ARMORED CONCRETE) SURFACES THAT ARE IN CONTACT WITH THE TOP, BOTTOM, AND/OR SIDES OF GATES OR VALVES (SUCH AS MOVABLE DAM GATES, TAINTOR GATES, MITER GATES, SECTOR GATES, GUARD GATES, LOCK VALVES, ETC.) SHALL MEET THE WATERTIGHT JOINT TOLERANCE CRITERIA OF ACI 117-10.

D. THE WIDTH OF LOCKS, GATE AND VALVE OPENINGS SHALL HAVE A TOLERANCE OF -0.0 INCHES, +0.5 INCHES UNLESS OTHERWISE NOTED.

E. THE "DEVIATION FROM PLANE" TOLERANCES OF MASS CONCRETE SHALL ALSO APPLY TO CANAL STRUCTURES.

REMOVAL, EXCAVATION, AND BACKFILL NOTES:

RE-1. THE CONTRACTOR SHALL PROVIDE ALL TEMPORARY SUPPORTS, BRACING, AND OTHER DEVICES REQUIRED OR DIRECTED BY THE ENGINEER, TO PROTECT THE SAFETY OF THE ADJACENT STRUCTURES AND UTILITIES. ALL COSTS FOR THIS WORK SHALL BE INCLUDED IN VARIOUS ITEMS IN THE CONTRACT.

RE-2. THE CONTRACTOR SHALL NOT DROP WASTE CONCRETE, DEBRIS, AND OTHER MATERIAL INTO THE LOCK, CANAL, RIVER, CULVERT, OR ROADWAYS, EXCEPT WHERE THE PLANS OR SPECIFICATIONS SPECIFICALLY PERMIT THE DEPOSITION OF MATERIAL. PLATFORMS, NETS, SCREENS, OR OTHER PROTECTIVE DEVICES SHALL BE USED TO CATCH MATERIAL. IF THE ENGINEER DETERMINES THAT ADEQUATE PROTECTIVE DEVICES ARE NOT BEING EMPLOYED, THE WORK SHALL BE SUSPENDED UNTIL ADEQUATE PROTECTION IS PROVIDED. IF MATERIAL FALLS ON THE AREA BELOW AND ADJACENT TO THE STRUCTURE, IT SHALL BE REMOVED AND DISPOSED OF BY THE CONTRACTOR ON A REGULAR RECURRING BASIS.

RE-3. THE COST OF FURNISHING, INSTALLING, MAINTAINING, REMOVING, AND DISPOSING OF ALL PLATFORMS, NETS, SCREENS, AND OTHER PROTECTIVE DEVICES, SHALL BE INCLUDED IN THE UNIT BID PRICES OF THE APPROPRIATE ITEMS IN THE CONTRACT.

RE-4. EXCAVATION BELOW THE PROPOSED LIMITS OF EXCAVATION WILL NOT BE ALLOWED WITHOUT WRITTEN PERMISSION FROM THE ENGINEER. BACKFILL OF UNAUTHORIZED EXCAVATIONS BELOW OR BEYOND PAYMENT LINES WILL BE AT THE CONTRACTOR'S EXPENSE.

RE-5. LAWN AREAS DISTURBED BY THE CONTRACTOR OUTSIDE THE MAXIMUM PAY LIMITS FOR RESTORATION SHOWN ON THE DRAWINGS IN THIS CONTRACT, SHALL BE GRADED IN A MANNER APPROVED BY THE ENGINEER, TOPSOILED (4") IN ACCORDANCE WITH THE SPECIFICATION FOR ITEM 610.1403 – TOPSOIL – LAWNS , AND SEEDED PER THE SPECIFICATION FOR ITEM 610.1602 – TURF ESTABLISHMENT – LAWNS. THE COST OF THIS WORK SHALL BE INCLUDED IN VARIOUS ITEMS OF THE CONTRACT.

RECONSTRUCTION NOTES:

R-1. THE CONTRACTOR SHALL EXAMINE AND VERIFY, IN THE FIELD, ALL CONDITIONS AND DIMENSIONS. DIMENSIONS OF THE EXISTING STRUCTURES SHOWN ON THESE PLANS ARE FOR GENERAL REFERENCE ONLY. DIMENSIONS HAVE BEEN TAKEN FROM THE ORIGINAL CONSTRUCTION OR SUBSEQUENT REHABILITATION DRAWINGS. THE CONTRACTOR SHALL TAKE ALL SUCH FIELD MEASUREMENTS AS ARE NECESSARY TO ENSURE PROPER FIT OF THE FINISHED WORK. THE CONTRACTOR SHALL ASSUME FULL RESPONSIBILITY FOR DIMENSIONAL ACCURACY. IF THE FIELD CONDITIONS AND DIMENSIONS DIFFER FROM THOSE SHOWN ON THE PLANS, THE CONTRACTOR SHALL USE THE FIELD CONDITIONS AND DIMENSIONS TO MAKE THE APPROPRIATE CHANGES TO THE DETAILS SHOWN ON THE PLANS, AS APPROVED BY THE ENGINEER. WHEN SHOP DRAWINGS BASED ON FIELD MEASUREMENTS ARE SUBMITTED FOR APPROVAL, THE FIELD MEASUREMENTS MADE SHALL BE INDICATED ON THE SHOP DRAWINGS SUBMITTED.

R-2. THE CONTRACTOR'S ATTENTION IS DIRECTED TO THE FACT THAT, DUE TO THE NATURE OF RECONSTRUCTION PROJECTS, THE EXACT EXTENT OF RECONSTRUCTION WORK CANNOT ALWAYS BE ACCURATELY DETERMINED PRIOR TO THE COMMENCEMENT OF WORK. THESE CONTRACT DOCUMENTS HAVE BEEN PREPARED BASED ON FIELD INSPECTION AND OTHER INFORMATION AVAILABLE. ACTUAL FIELD CONDITIONS MAY REQUIRE MODIFICATIONS TO CONSTRUCTION DETAILS AND WORK QUANTITIES. THE CONTRACTOR SHALL PERFORM THE WORK IN ACCORDANCE WITH FIELD CONDITIONS, AS DIRECTED BY THE ENGINEER.

R-3. THE CONTRACTOR SHALL BE HELD RESPONSIBLE FOR ALL DAMAGE TO THE EXISTING FACILITY CAUSED BY OPERATIONS WHICH ARE NOT INCLUDED AS PART OF THE INTENDED WORK. ALL DAMAGE TO THE EXISTING FACILITY, WHICH IS NOT PART OF THE INTENDED WORK, SHALL BE REPAIRED BY THE CONTRACTOR WITHOUT COST TO THE AUTHORITY/CANAL CORPORATION, TO THE SATISFACTION OF THE ENGINEER.

R-4. THE CONTRACTOR SHALL CONDUCT HIS REMOVAL OPERATIONS WITH CARE, TO THE SATISFACTION OF THE ENGINEER, SO AS NOT TO UNDULY DISTURB UNDERLYING MATERIALS WHICH ARE TO REMAIN IN PLACE. THE CONTRACTOR SHALL PERFORM ALL WORK WITH CAREFULLY SO THAT ANY MATERIALS WHICH ARE TO REMAIN IN PLACE, OR WHICH ARE TO REMAIN THE PROPERTY OF THE AUTHORITY/CANAL CORPORATION, WILL NOT BE DAMAGED. IF THE CONTRACTOR DAMAGES ANY MATERIALS WHICH ARE TO REMAIN IN PLACE, OR WHICH ARE TO REMAIN THE PROPERTY OF THE AUTHORITY/CANAL CORPORATION, THE DAMAGED MATERIALS SHALL BE REPAIRED OR REPLACED IN A MANNER SATISFACTORY TO THE ENGINEER, AT THE EXPENSE OF THE CONTRACTOR.

R-5. ALL CONCRETE SURFACES RECEIVING NEW CONCRETE SHALL BE SANDBLASTED OR WATERBLASTED PRIOR TO THE PLACEMENT OF REINFORCING STEEL, AS APPROVED BY THE ENGINEER. EXCESS GROUT FROM DRILLED AND GROUTED REINFORCEMENT SHALL BE WIPED CLEAN FROM THE CONCRETE SURFACE. THE SURFACES SHALL BE AIR CLEANED AND WET DOWN FOR A MINIMUM OF 4 HOURS BEFORE CONCRETE PLACEMENT. THERE WILL BE NO SEPARATE PAYMENT FOR THIS WORK. THE COST FOR THIS WORK SHALL BE INCLUDED IN THE UNIT PRICE BID FOR THE VARIOUS CONCRETE ITEMS IN THE CONTRACT.

BRICK LINING REPAIR NOTES (CULVERT TUNNEL):

BR-1. THE CONTRACTOR IS ADVISED TO PROCEED CAREFULLY WITH THE VALVE CONCRETE REMOVAL TO AVOID CAUSING BRICK LINING FAILURES IN THE CULVERT TUNNEL. VALVE WELL DEMOLITION PROCEDURES WILL LIKELY CAUSE SOME BRICK LININNG FAILURES TO OCCUR IN THE AREAS THAT ARE TO REMAIN. REFER TO THE BRICK VOID REPAIR DETAIL ON DRAWING CG-2.

BR-2. PATCHING CONCRETE SHALL BE PLACED IN THE BRICK VOIDS BY PROFESSIONAL MASONS. THE COST FOR THIS WORK AND MATERIALS TO COMPLETE THE REPAIRS SHALL BE PAID FOR UNDER VARIOUS ITEMS SPECIFIED ON DRAWING CG-2.

ALTERED ON:	AFFIXED ON: 6-21-16
SIGNATURE: STAMP:	SIGNATURE: STAMP: STATE OF NEW YORK · F. DAVID HUDDA · 061048 · LICENSED PROFESSIONAL ENGINEER

IT IS A VIOLATION OF LAW FOR ANY PERSON, UNLESS THEY ARE ACTING UNDER THE DIRECTION OF A LICENSED PROFESSIONAL ENGINEER, ARCHITECT, LANDSCAPE ARCHITECT, OR LAND SURVEYOR, TO ALTER AN ITEM IN ANY WAY. IF AN ITEM BEARING THE STAMP OF A LICENSED PROFESSIONAL IS ALTERED, THE ALTERING ENGINEER, ARCHITECT, LANDSCAPE ARCHITECT, OR LAND SURVEYOR SHALL STAMP THE DOCUMENT AND INCLUDE THE NOTATION "ALTERED BY" FOLLOWED BY THEIR SIGNATURE. THE DATE OF SUCH ALTERATION, AND A SPECIFIC DESCRIPTION OF THE ALTERATION.

REVISIONS

DATE	DESCRIPTION	BY	SYM.

NEW YORK STATE THRUWAY AUTHORITY
DEPARTMENT OF ENGINEERING
200 SOUTHERN BLVD., ALBANY, N.Y. 12209

TITLE OF PROJECT: LOCK E-32 BYPASS CULVERT REPAIR
LOCATION OF PROJECT: TOWN OF PITTSFORD MONROE COUNTY
TITLE OF DRAWING: GENERAL NOTES I

CONTRACT NUMBER: TAB 16-26C
DATE: 6/17/16
DRAWING NUMBER: GN-1

2016\B94058\Design\Plans\LOCK E-32 GENERAL NOTES.dgn
CHECKED BY: D. HUDDA
DRAFTED BY: J.S. LeBLANC
CHECKED BY: D. HUDDA
DESIGNED BY: J.S. LeBLANC
DESIGN SUPERVISOR: R. KARIS

CANAL OPERATIONS NOTES:

CO-1. HISTORICAL WATER LEVEL RECORDS ARE AVAILABLE FOR REVIEW BY THE CONTRACTOR AT THE DIVISION CANAL ENGINEER'S OFFICE. THE CONTRACTOR SHALL HAVE NO CLAIM AGAINST THE THRUWAY AUTHORITY/CANAL CORPORATION FOR FLOWS NOT REGULATED BY THE THRUWAY AUTHORITY/CANAL CORPORATION.

CO-2. THE CONTRACTOR IS ADVISED THAT THE CANAL WILL BE OPEN FOR CANAL MAINTENANCE BETWEEN THE DATES LISTED BELOW. THE CONTRACTOR SHALL SCHEDULE AND PROGRESS WORK TO ENSURE THE CANAL IS OPEN FOR USE BY CANAL CORPORATION MAINTENANCE FORCES DURING THIS PERIOD.

APPROXIMATE OPENING AND CLOSING DATES FOR NAVIGATION ARE SCHEDULED AS FOLLOWS:

CLOSED TO PUBLIC USE ------- NOVEMBER 20, 2016
CLOSED TO CANAL MAINTENANCE ------- DECEMBER 1, 2016
OPEN TO CANAL MAINTENANCE ------- APRIL 1, 2017
OPEN TO PUBLIC USE ------- MAY 1, 2017

CO-3. POOL ELEVATIONS SHOWN ELSEWHERE IN THESE CONTRACT PLANS ARE PUBLISHED WATER ELEVATIONS WHICH OCCUR DURING THE CANAL NAVIGATION SEASON. ACTUAL CANAL WATER ELEVATIONS MAY VARY FROM THE PUBLISHED ELEVATIONS CONSIDERABLY, AND ARE TO BE MONITORED BY THE CONTRACTOR AT ALL TIMES. ALL ELEVATIONS SHOWN ARE BASED ON BARGE CANAL DATUM (B.C.D.) UNLESS OTHERWISE NOTED.

CO-4. <u>CANAL CORPORATION ACCESS</u>: OSHA-APPROVED ACCESS TO AND ON CATWALKS FOR PURPOSES OF OPERATING GATES AND RELATED EQUIPMENT MUST BE PROVIDED TO CANAL CORPORATION PERSONNEL DURING ALL NAVIGATION SEASONS, INCLUDING CANAL READYING AND SHUTDOWN PERIODS.

COFFERDAM AND DEWATERING NOTES:

CD-1. THE COFFERDAM LOCATIONS ILLUSTRATED IN THE PLAN SET INDICATE THE APPROXIMATE LOCATION OF THE REQUIRED COFFERDAM UNDER THE APPROPRIATE COFFERDAM PAY ITEM. THE ILLUSTRATIONS ARE NOT INTENDED TO SPECIFY THE METHODS USED FOR DEWATERING. ALL WORK SHALL BE PERFORMED, AND ALL MATERIALS PROVIDED SHALL BE IN CONFORMANCE WITH THE ITEM 553.01nnnn SPECIFICATION.

CD-2. DESIGN, CONSTRUCTION, MAINTENANCE, AND REMOVAL OF ALL COFFERDAM AND DEWATERING SYSTEMS SHALL BE THE RESPONSIBILITY OF THE CONTRACTOR, AND SUBJECT TO THE APPROVAL OF THE ENGINEER. THE CONTRACTOR IS FULLY RESPONSIBLE FOR THE STABILITY OF EACH COFFERDAM SYSTEM.

CD-3. THE CONTRACTOR SHALL HAVE AN ENGINEER, LICENSED IN THE STATE OF NEW YORK, PREPARE AND STAMP A SET OF COFFERDAM SYSTEM PLANS, INCLUDING COMPUTATIONS AND INSTALLATION/REMOVAL METHODS, WHICH SHALL BE SUBMITTED TO THE ENGINEER. IN ADDITION TO HYDROSTATIC FORCED, ALL COFFERDAM DESIGNS SHALL CONSIDER HYDRODYNAMIC AND WIND FORCES. ICE LOADS SHALL BE CONSIDERED FOR COFFERDAM SYSTEMS IN PLACE FROM NOVEMBER 1 TO APRIL 1.

CD-4. WHERE A COFFERDAM IS USED COMPLETELY OR PARTIALLY AROUND A WORK AREA, THE COST OF DEWATERING THE ENTIRE WORK AREA, REGARDLESS OF THE SOURCE OF WATER, SHALL BE INCLUDED IN THE LUMP SUM PRICE BID FOR THE APPLICABLE COFFERDAM ITEM.

CD-5. THE COFFERDAM SYSTEM SHALL BE REMOVED AS SOON AS IT IS NO LONGER NEEDED. THE COST FOR REMOVAL SHALL BE INCLUDED IN THE APPLICABLE COFFERDAM ITEM.

CD-6. ANY FILL USED IN THE CONSTRUCTION OF THE COFFERDAM SHALL BE CLEAN, UNCONTAMINATED GRANULAR FILL WITH A MAXIMUM OF 10% BY WEIGHT PASSING A NUMBER 200 SIEVE, AS MEASURED IN ACCORDANCE WITH ASTM C136. ALL FILL USED IN THE COFFERDAM CONSTRUCTION SHALL BE REMOVED WHEN THE COFFERDAM SYSTEM IS REMOVED, EXCEPT WHEN THE ENGINEER DIRECTS THE FILL BE PLACED ELSEWHERE.

CD-7. A MEMBRANE (PLASTIC SHEET, TARP, OR OTHER SIMILAR MATERIAL) WITH SANDBAGS MAY BE USED ALONG THE COFFERDAM FACE TO MINIMIZE SEEPAGE INTO THE WORK AREA.

CD-8. TEMPORARY SETTLING BASINS SHALL BE CONSTRUCTED FOR CONTROL OF DISCHARGE WATER. THE COST FOR THIS WORK SHALL BE PAID FOR UNDER THE APPROPRIATE COFFERDAM ITEM.

WORK ZONE TRAFFIC CONTROL NOTES:

TC-1. WORK ZONE TRAFFIC CONTROL SHALL BE IMPLEMENTED THROUGHOUT THE DURATION OF THE CONTRACT IN ACCORDANCE WITH SECTION 619 OF THE NYSDOT STANDARD SPECIFICATIONS, DATED MAY 1, 2008, THE MANUAL ON UNIFORM TRAFFIC CONTROL DEVICES (MUTCD) AND THE NYS SUPPLEMENT, AND THE CONTRACT DOCUMENTS.

TC-2. ALL WORK AREAS AT THE STRUCTURE SHALL BE COMPLETELY FENCED, CONFORMING WITH OSHA REGULATIONS, TO THE SATISFACTION OF THE ENGINEER, IN ORDER TO PROTECT THE PUBLIC AND PREVENT UNAUTHORIZED ENTRY. THE COST OF THIS WORK IS TO BE INCLUDED IN ITEM 619.01.

TC-3. DISTANCES SHOWN FOR TRAFFIC CONTROL DEVICE PLACEMENT ARE APPROXIMATE, AND MAY BE REVISED BY THE ENGINEER TO MEET FIELD CONDITIONS.

TC-4. THE COST OF FURNISHING, INSTALLING, AND MAINTAINING ALL SIGNS ON THE WORK ZONE TRAFFIC CONTROL SHEETS SHALL BE PAID FOR UNDER ITEM 619.01.

ENVIRONMENTAL PROTECTION NOTES:

E-1. <u>STREAM CONSERVATION</u>: THE CONTRACTOR SHALL CONDUCT OPERATIONS IN SUCH A MANNER, TO THE SATISFACTION OF THE ENGINEER, TO PREVENT ANY DAMAGE TO THE CANAL, RIVER, OR STREAM FROM POLLUTION BY DEBRIS, SEDIMENT, OR OTHER FOREIGN MATERIAL, OR FROM THE MANIPULATION OF EQUIPMENT AND/OR MATERIALS IN OR NEAR THE WATERWAYS. THE CONTRACTOR SHALL NOT RETURN DIRECTLY TO A STREAM, OR TO A DITCH IMMEDIATELY FLOWING INTO A STREAM, ANY WATER WHICH HAS BEEN USED FOR WASH PURPOSES OR OTHER SIMILAR OPERATIONS, WHICH COULD CAUSE THIS WATER TO BECOME POLLUTED WITH SAND, SILT, CEMENT, OIL, OR OTHER IMPURITIES. IF THE CONTRACTOR USES WATER FROM A STREAM, THE CONTRACTOR SHALL CONSTRUCT AN INTAKE OR TEMPORARY DAM TO PROTECT AND MAINTAIN WATER RIGHTS, AND TO SUSTAIN FISH LIFE DOWNSTREAM. THESE TEMPORARY MEASURES SHALL BE REMOVED AND THE AREA RESTORED AT THE COMPLETION OF THE WORK. COST SHALL BE INCLUDED IN VARIOUS ITEMS OF THE CONTRACT.

E-2. ANY MATERIAL ENTERING THE WATER, FOR ANY REASON WHATSOEVER, WHICH IS NOT PART OF THE INTENDED WORK, SHALL BE REMOVED PROMPTLY BY THE CONTRACTOR AND DISPOSED OF PROPERLY. IF THE CANAL CORPORATION IS FORCED TO REMOVE THE MATERIAL, THE COST OF REMOVAL AND DISPOSAL WILL BE CHARGED TO THE CONTRACTOR.

E-3. CARE SHALL BE TAKEN TO RETAIN NATURAL GROWTH AND PREVENT DAMAGE TO TREES WITHIN AND OUTSIDE THE LIMITS OF CONSTRUCTION, WHICH ARE NOT SCHEDULED FOR REMOVAL. ANY DAMAGE CAUSED TO THIS NATURAL GROWTH SHALL BE RESTORED AT THE EXPENSE OF THE CONTRACTOR, AS DIRECTED BY THE ENGINEER.

E-4. WET OR FRESH CONCRETE SHALL NOT BE ALLOWED TO ESCAPE DIRECTLY OR INDIRECTLY INTO ANY WAYERBODY (ie; CANAL, RIVER, STREAM, WETLAND, DITCH, POND, ETC.) OR DRAINAGE STRUCTURE, NOR SHALL WASHINGS FROM CONCRETE TRUCKS, MIXERS, OR OTHER DEVICES BE ALLOWED TO ESCAPE DIRECTLY OR INDIRECTLY INTO ANY WATERBODY OR DRAINAGE STRUCTURE. ALL WASHOUT DISPOSAL AREAS TO BE UTILIZED BY THE CONTRACTOR SHALL BE PRE-APPROVED BY THE ENGINEER.

E-5. DISCHARGE OF OIL AND HAZARDOUS SUBSTANCES IS PROHIBITED BY SECTION 311 OF THE CLEAN WATER ACT. THE CONTRACTOR SHALL PREVENT OIL AND OTHER SUCH MATERIALS FROM DISCHARGING TO THE GROUND, DRAINS, DITCHES, SURFACE WATERS, WETLANDS, AND/OR GROUNDWATER. APPROPRIATE SPILL PREVENTION AND CONTROL PROCEDURES SHALL BE IMPLEMENTED PRIOR TO ANY CONSTRUCTION ACTIVITIES. THESE PROCEDURES SHALL INCLUDE, BUT ARE NOT LIMITED TO; PROPER MAINTENANCE OF CONSTRUCTION EQUIPMENT, DESIGNATING FUEL/HAZARDOUS SUBSTANCES HANDLING AREAS, USE OF APPROPRIATE CONTAINMENT AND AVAILABILITY OF SPILL RESPONSE RESOURCES FOR PREVENTION OF ANY SPILLED SUBSTANCE FROM ENTERING THE ENVIRONMENT. IF, IN SPITE OF SUCH PLANNING AND CONTROL MEASURES, OIL OR OTHER HAZARDOUS SUBSTANCES ARE RELEASED INTO THE ENVIRONMENT, IMMEDIATE NOTIFICATION SHALL BE GIVEN TO THE ENGINEER. IN ADDITION, ANY PILLS EXCEEDING APPLICABLE REPORTABLE QUANTITY CRITERIA (FOR GUIDANCE SEE HTTP://WWW.DEC.NY.GOV/REGULATIONS/2634.HTML) SHALL BE REPORTED TO THE NEW YORK STATE DEPARTMENT OF ENVIRONMENTAL CONSERVATION AT TELEPHONE NUMBER (518) 457-7362, THE NATIONAL RESPONSE CENTER AT TELEPHONE NUMBER 1-800-424-8802, AND THE NEW YORK STATE THRUWAY AUTHORITY/CANAL CORPORATION DISPATCHER AT TELEPHONE NUMBER (866) 691-8282, PER SPILL REPORTING REQUIREMENTS.

UTILITY NOTES:

U-1. LOCATION OF UTILITIES, PUBLIC AND/OR PRIVATE, INDICATED AS EXISTING AND/OR TO BE CONSTRUCTED AS SHOWN ON THE PLANS, ARE APPROXIMATE ONLY. THE EXACT LOCATION OF UTILITIES SHALL BE DETERMINED IN THE FIELD. ADDITIONAL UTILITY LINES, WHETHER ABANDONED OR IN SERVICE, MAY EXIST. IT SHALL BE THE RESPONSIBILITY OF THE CONTRACTOR TO CONDUCT OPERATIONS, AND TAKE THE NECESSARY PRECAUTIONS TO PREVENT INTERFERENCE WITH, OR DAMAGE TO THESE OR OTHER FACILITIES DURING THE COURSE OF CONSTRUCTION.

U-2. SHOULD UTILITIES BE ENCOUNTERED DURING CONSTRUCTION WHICH INTERFERE WITH THE WORK, AND FOR WHICH PROVISIONS ARE NOT MADE ON THE PLANS, THE CONTRACTOR SHALL IMMEDIATELY NOTIFY THE ENGINEER OF THE EXISTENCE OF THESE UTILITIES AND EXTENT OF CONFLICT WITH THE WORK. THE CONTRACTOR SHALL MAKE ARRANGEMENTS WITH THE OWNING AGENCY TO MODIFY ITS FACILITY IN ORDER TO ALLOW THE WORK TO PROGRESS. ANY ADJUSTMENTS TO CONTRACT QUANTITIES AS A RESULT OF SUCH UTILITY CONFLICTS WILL BE PAID FOR AT CONTRACT UNIT PRICES.

U-3. SPECIAL CARE SHALL BE TAKEN TO AVOID DAMAGING EXISTING UTILITIES. ANY DAMAGE CAUSED BY THE CONTRACTOR'S OPERATIONS SHALL BE REPAIRED BY THE CONTRACTOR AT NO COST TO THE AUTHORITY.

U-4. IN THE EVENT THE CONTRACTOR DAMAGES AN EXISTING UTILITY SERVICE, CAUSING AN INTERRUPTION IN SAID SERVICE, THE CONTRACTOR SHALL IMMEDIATELY COMMENCE REPAIR WORK TO RESTORE SERVICE, AND MAY NOT CEASE REPAIR WORK UNTIL SERVICE IS RESTORED.

WORK TO BE DONE:

A GENERAL DESCRIPTION OF THE WORK TO BE DONE UNDER THIS CONTRACT IS SHOWN BELOW. THE LIST IS INTENDED TO GIVE THE CONTRACTOR A GENERAL DESCRIPTION OF THE WORK INVOLVED IN THIS CONTRACT, AND IS NOT A COMPLETE LISTING OF ALL WORK TO BE DONE. ALL WORK SHALL BE DONE IN ACCORDANCE WITH THE CONTRACT DOCUMENTS, EVEN THOUGH NOT SPECIFICALLY MENTIONED IN THIS LIST.

W-1. REMOVE CONCRETE AND CAST IRON FRAMES AT LOWER APPROACH WALL JOINTS, INSTALL CONCRETE AND REINFORCING BARS IN NEW STAGGERED JOINTS, AND REPAIR TUNNEL LINING DEFECTS.

W-2. REMOVE AND REPLACE BYPASS CULVERT INLET CONCRETE AND REPAIR/REINSTALL TRASH RACKS.

W-3. REPAIR INLET TUNNEL LINING DEFECTS.

W-4. RESURFACE WALKWAY AND APPROACH WALL CONCRETE FACES.

W-5. DEMOLISH AND REPLACE BYPASS CULVERT VALVE WELL.

W-6. RESURFACE CULVERT OUTLET CONCRETE.

SUGGESTED CONSTRUCTION SEQUENCE:

<u>AT BYPASS CULVERT INLET:</u>

INSTALL COFFERDAM
DEWATER SITE
REMOVE EXISTING TRASH RACKS AND RELOCATE FOR REPAIRS
REMOVE CONCRETE TO REPAIR LIMITS
INSTALL REINFORCING
ASSEMBLE FORMS FOR CONCRETE POUR
POUR CONCRETE REPAIRS
REMOVE CONCRETE FORMS
INSTALL REHABILITATED TRASH RACKS
PERFORM TUNNEL CEILING GROUT REPAIRS BETWEEN INLET AND NEW BYPASS VALVE WELL
COFFERDAM REMAINS FOR VALVE WELL REPLACEMENT AND TUNNEL LINING REPAIRS
REMOVE COFFERDAM AFTER ABOVE REPAIRS ARE COMPLETE AND ACCEPTED

<u>AT JOINT REPAIRS:</u>

INSTALL COFFERDAM
DEWATER SITE
REMOVE CONCRETE TO REPAIR LIMITS
INSTALL REINFORCING
ASSEMBLE FORMS FOR CONCRETE POUR
POUR CONCRETE REPAIRS
REMOVE CONCRETE FORMS
COFFERDAM REMAINS FOR APPROACH WALL CONCRETE RESURFACING

<u>AT APPROACH WALL WALKWAY AND FACE RESURFACING:</u>

REMOVE CONCRETE TO REPAIR LIMITS
INSTALL REINFORCING
ASSEMBLE FORMS FOR CONCRETE POUR
POUR CONCRETE REPAIRS
REMOVE CONCRETE FORMS
REMOVE COFFERDAM

<u>AT VALVE WELL REPLACEMENT:</u>

REMOVE AND STORE OR DISPOSE OF BYPASS CULVERT MACHINERY FROM VALVE WELL
INSTALL COFFERDAM
DEWATER SITE
DEMOLISH VALVE WELL
INSTALL NEW VALVE SEAT SUPPORT LINING
INSTALL REINFORCING
ASSEMBLE FORMS FOR CONCRETE POUR
INSTALL NEW GRATING SUPPORT FRAME AT TOP OF VALVE WELL
POUR NEW VALVE WELL
REMOVE CONCRETE FORMS
PERFORM REMEDIAL REPAIRS ON TUNNEL BRICK LINING
REINSTALL STORED BYPASS VALVE MACHINERY
INSTALL NEW BYPASS VALVE MACHINERY
REMOVE COFFERDAM

ALTERED ON:	AFFIXED ON: 6-21-16
SIGNATURE: STAMP:	SIGNATURE: STAMP: STATE OF NEW YORK · F. DAVID HUDDA · 061048 · LICENSED PROFESSIONAL ENGINEER

IT IS A VIOLATION OF LAW FOR ANY PERSON, UNLESS THEY ARE ACTING UNDER THE DIRECTION OF A LICENSED PROFESSIONAL ENGINEER, ARCHITECT, LANDSCAPE ARCHITECT, OR LAND SURVEYOR, TO ALTER AN ITEM IN ANY WAY. IF AN ITEM BEARING THE STAMP OF A LICENSED PROFESSIONAL IS ALTERED, THE ALTERING ENGINEER, ARCHITECT, LANDSCAPE ARCHITECT, OR LAND SURVEYOR SHALL STAMP THE DOCUMENT AND INCLUDE THE NOTATION "ALTERED BY" FOLLOWED BY THEIR SIGNATURE. THE DATE OF SUCH ALTERATION, AND A SPECIFIC DESCRIPTION OF THE ALTERATION.

REVISIONS

DATE	DESCRIPTION	BY	SYM.

NEW YORK STATE THRUWAY AUTHORITY
DEPARTMENT OF ENGINEERING
200 SOUTHERN BLVD., ALBANY, N.Y. 12209

TITLE OF PROJECT: LOCK E-32 BYPASS CULVERT REPAIR
LOCATION OF PROJECT: TOWN OF PITTSFORD, MONROE COUNTY
TITLE OF DRAWING: GENERAL NOTES II
CONTRACT NUMBER: TAB 16-26C
DATE: 6/17/16
DRAWING NUMBER: GN-2

2016\894058\Design\Plans\METAL FABRICATION NOTES.dgn
CHECKED BY: D. HUDDA
DRAFTED BY: J.S. LeBLANC
DESIGNED BY: J.S. LeBLANC
CHECKED BY: D. HUDDA
DESIGN SUPERVISOR: R. KARIS

METAL FABRICATION NOTES:

THESE NOTES ARE INTENDED TO BE A GUIDELINE TO THE VARIOUS STEEL FABRICATION SPECIFICATIONS.
THESE NOTES ARE NOT A COMPLETE LISTING OF ALL REQUIREMENTS.
THE CONTRACTOR SHALL PERFORM ALL WORK IN ACCORDANCE WITH THE SPECIFICATIONS.

GENERAL:

I. BASE METAL REQUIREMENTS:

A. GENERAL:

1. ALL STEEL SHALL BE OF DOMESTIC ORIGIN.

2. THE DIMENSIONAL TOLERANCE OF EACH INDIVIDUAL MEMBER SHALL BE IN ACCORDANCE WITH THE GOVERNING WELDING SPECIFICATION, UNLESS OTHERWISE NOTED OTHERWISE IN THE CONTRACT DOCUMENTS. THE DIMENSIONAL TOLERANCE OF THE COMPLETED ASSEMBLY SHALL ALSO BE IN ACCORDANCE WITH THE LEAST RESTRICTIVE TOLERANCE OF THE INDIVIDUAL MEMBERS.

B. STEEL:

1. STEEL SHALL CONFORM TO THE REQUIREMENTS OF NYS MATERIAL SPECIFICATION 715-01.

2. UNLESS SPECIFIED OTHERWISE ON THE CONTRACT DOCUMENTS, THE STEEL SHALL CONFORM TO ASTM A709, GRADE 50.

C. STAINLESS STEEL:

UNLESS SPECIFIED OTHERWISE ON THE CONTRACT DOCUMENTS, THE STAINLESS STEEL SHALL CONFORM TO TYPE 316 OF ASTM A276 (BARS AND SHAPES), A480 (PLATES), OR A484 (FORGINGS).

D. ALUMINUM:

ALL ALUMINUM SHALL CONFORM TO ASTM B221, 6061-T6 UNLESS SPECIFIED OTHERWISE ON THE CONTRACT DOCUMENTS.

E. STUDS:

ALL CONCRETE STUDS SHALL BE ASTM A108 FURNISHED AND INSTALLED IN ACCORDANCE WITH STANDARD SPECIFICATION 709-05.

II. EXISTING STEEL:

EXISTING STEEL THAT HAS BEEN INSTALLED PRIOR TO THE MID-SIXTIES HAS WELDABILITY CONCERNS. THEREFORE WHEN WELDING IS PROPOSED TO THIS STEEL, THE CARBON EQUIVALENT SHALL BE DETERMINED AND SUBMITTED WITH THE WPS, OR A 400 DEGREE F MINIMUM PREHEAT SHALL BE SPECIFIED IN THE WPS.

III. STUD WELDS:

SMAW MAY BE USED WITH SPECIFIC PRIOR APPROVAL, PROVIDED:

A. WELDING IS DONE WITH 5/32" DIAMETER ELECTRODES.

B. THE STUD BASE IS PREPARED SO THAT THE OUTSIDE CIRCUMFERENCE FITS TIGHTLY AGAINST THE BASE METAL.

C. ALL RUST AND MILL SCALE IS REMOVED FROM THE BASE METAL BY BLASTING OR GRINDING.

D. THE BASE METAL IS PROPERLY PREHEATED.

IV. MANUAL SHIELDED METAL ARC WELDING (SMAW OR STICK):

A. LOW HYDROGEN ELECTRODES SHALL BE USED FOR ALL MANUAL SHIELDED METAL ARC WELDING (SMAW OR STICK).

B. THE ELECTRODES SHALL BE DELIVERED IN HERMETICALLY SEALED CONTAINERS.

C. THE ELECTRODES SHALL BE PROPERLY DRIED BEFORE USE.

D. MAY BE USED IN A SHOP OR FIELD APPLICATION.

E. THE ELECTRODES SHALL BE LOW HYDROGEN.

V. FLUX CORED ARC WELDING (FCAW):

A. MUST NOT BE USED IN A DRAFT OR WIND EXCEEDING 5 MPH.

B. WELDERS MUST HAVE ACCESS TO A POWER CHIPPER OR A NEEDLE DESCALER AND AN AIR CARBON ARC GOUGER AT ALL TIMES.

VI. SUBMERGED ARC WELDING (SAW):

MAY BE USED IN THE SHOP OR FIELD FOR GROOVE WELDS IN THE FLAT POSITION AND FOR FILLET WELDS IN THE FLAT OR HORIZONTAL POSITION ONLY.

VII. ANY WELDS PERFORMED BY THE ELECTROSLAG PROCESS WILL BE REJECTED.

VIII. THE MINIMUM FILLET WELD SIZE SHALL BE 5/16" UNLESS OTHERWISE SHOWN ON THE CONTRACT DRAWINGS.

IX. ALL RE-ENTRANT CORNERS SHALL BE SHAPED NOTCH FREE AND WITH A MINIMUM RADIUS OF 3/4 INCH, UNLESS OTHERWISE NOTED.

X. ALL SHARP EDGES ON PLATES AND SHAPES SHALL BE DEBURRED.

XI. THE MAXIMUM GAP BETWEEN ABUTTING PARTS THAT ARE REQUIRED TO BE FITTED TO BEAR SHALL BE 0.040 INCH.

XII. ALL ADJUSTMENTS TO CAMBER OR HORIZONTAL SWEEP OF MEMBERS MUST BE DONE IN ACCORDANCE WITH SECTION 15 OF THE NYSSCM.

XIII. ALL EXPOSED EDGES ON PLATES AND SHAPES SHALL BE CHAMFERED TO A MINIMUM RADIUS OF INCH TO FACILITATE PAINTING.

XIV. BOLTED CONNECTIONS:

A. MEMBERS OF CONNECTIONS SHALL BE MATCH MARKED AS NECESSARY FOR ASSEMBLY AFTER CLEANING AND PAINTING OF THE CONNECTION INNER PLIES.

B. INNER PLIES OF ALL BOLTED CONNECTIONS SHALL BE SOLVENT CLEANED, BLAST CLEANED AND PRIMED IN ACCORDANCE WITH THE COATING REQUIREMENTS.

C. ALL BOLTING SHALL BE PERFORMED IN ACCORDANCE WITH SECTION 10 OF THE NYSSCM. THIS SHALL INCLUDE BOLT TENSION VERIFICATION AND SAMPLING OF FASTENERS.

D. ALL PLAIN FASTENERS SHALL BE ASTM A325 TYPE 1 HIGH STRENGTH BOLTS, WITH ASTM A563, GRADE C, D, OR DH OR ASTM A194 GRADE 2 OR 2H NUTS, AND ASTM F436 WASHERS.

E. ALL GALVANIZED FASTENERS SHALL BE ASTM A325 TYPE 1 HIGH STRENGTH BOLTS, WITH ASTM A563, GRADE DH OR ASTM A194 GRADE 2H NUTS, AND ASTM F436 WASHERS GALVANIZED IN ACCORDANCE WITH STANDARD SPECIFICATION 719-01 (TYPE II), OR ASTM B695.

F. ALL STAINLESS STEEL BOLTS SHALL BE ASTM A193, GRADE B6, CLASS 1 OR 2, WITH ASTM A194 GRADE 6 NUTS, AND ASTM A167, TYPE 304 STAINLESS STEEL WASHERS, UNLESS OTHERWISE NOTED ON THE CONTRACT DOCUMENTS.

G. ANCHOR BOLTS SHALL BE ASTM A449 THREADED RODS WITH GALVANIZED ASTM A563 GRADE DH OR ASTM A194 GRADE 2H NUTS AND GALVANIZED ASTM F436 WASHERS. GALVANIZING SHALL BE IN ACCORDANCE WITH STANDARD SPECIFICATION 719-01.

XV. WELDING OF STAINLESS STEEL:

A. GRINDING DISKS, SAW BLADES, FILES, AND OTHER CUTTING TOOLS THAT HAVE BEEN USED ON CARBON STEEL SHALL NOT BE REUSED ON STAINLESS STEEL.

B. GRINDING SHALL BE DONE WITH IRON-FREE ABRASIVE WHEELS.

C. WIRE BRUSHES SHALL BE STAINLESS STEEL.

XVI. FRACTURE CRITICAL MEMBERS:

A. THE MILL CERTIFICATES SHALL ALSO INDICATE THE FOLLOWING:

1. BASE METAL:

a. PLATES AND SHAPES HAVE BEEN PRODUCED TO FULLY KILLED FINE GRAIN PRACTICE, UNLESS OTHERWISE SPECIFIED ON THE CONTRACT DOCUMENTS.

b. ALL PLATES HAVE BEEN ROLLED ON A SHEARED MILL.

c. ALL PLATES HAVE OXYGEN CUT EDGES.

2. ALL STRUCTURAL STEEL PLATES AND SHAPES DESIGNATED AS FCM SHALL HAVE IMPROVED TOUGHNESS REQUIREMENTS AS SPECIFIED IN SECTION 9 OF THE NYSSCM. TESTING SHALL BE AT THE "P" (PLATE) FREQUENCY, MODIFIED TO INCLUDE TESTS AT EACH END OF THE STRUCTURAL STEEL.

3. THERE HAS BEEN NO CONDITIONING OF THE FRACTURE CRITICAL PLATES AND SHAPES BY WELDING.

B. THE FABRICATOR SHALL BE CERTIFIED TO FABRICATE FRACTURE CRITICAL MEMBERS BY THE AMERICAN INSTITUTE OF STEEL CONSTRUCTION.

C. PRIOR TO FABRICATION ALL SURFACES OF FCM DESIGNATED STRUCTURAL STEEL SHALL BE BLAST CLEANED IN ACCORDANCE WITH SSPC SP-6 (COMMERCIAL BLAST CLEANING) AND VISUALLY INSPECTED BY THE QC INSPECTOR FOR INJURIOUS DEFECTS.

D. THE FABRICATOR SHALL SUBMIT AND FOLLOW A "FRACTURE CONTROL PLAN" IN ACCORDANCE WITH SECTION 9 OF THE NYSSCM.

E. ONLY FLAME CUT OR SAWN EDGES WILL BE ALLOWED.

F. CHANGES/REPAIRS:

1. ANY DEVIATIONS FROM THE APPROVED SHOP DRAWING, MATERIAL DEFECTS OR DISCONTINUITIES SHALL BE FULLY AND ACCURATELY DESCRIBED, AND IMMEDIATELY SUBMITTED TO THE AUTHORITY'S METALS ENGINEERING UNIT FOR EVALUATION.

2. IF DIRECTED BY THE AUTHORITY'S METALS ENGINEERING UNIT, THE FABRICATOR SHALL PREPARE AND SUBMIT FOR APPROVAL A REPAIR PROCEDURE IN ACCORDANCE WITH THE REPAIR REQUIREMENTS NOTED BELOW.

3. REPAIRS SHALL BE MADE IN ACCORDANCE WITH THE APPROVED REPAIR PROCEDURE.

XVII. FOR CASTING REQUIREMENTS, REFER TO THE SPECIFICATIONS.

COATING REQUIREMENTS:

I. STEEL MEMBERS WITH COMBINATIONS OF FINISH COLORS, SHALL MATCH THE EXISTING PAINT PATTERN. LOCK NUMBERS SHALL BE PAINTED ONTO MACHINERY CABINETS TO MATCH THE EXISTING.

II. FOR THOSE SURFACES REQUIRED TO BE PAINTED, A MINIMUM THREE INCH SQUARE COLOR CHIP OF EACH FINISH COAT PAINT COLOR PROVIDED BY EACH MANUFACTURER SHALL BE PREPARED, AND SHALL BE A REASONABLE VISUAL MATCH TO THE FOLLOWING COLOR DESIGNATIONS AS VIEWED UNDER NORTH STANDARD DAYLIGHT AS DETERMINED BY THE ENGINEER:

FINISH COAT COLOR	OGS DESIGNATION	FEDERAL DESIGNATION
YELLOW.....	OGS # NY 27	13432
BLUE.....	OGS # NY 30	15050
RED.....	OGS # NY 17	20152
BLACK.....	OGS # NY 39	17038
WHITE.....	OGS # NY 37	–
SAGE GREEN.....	MUNSELL BOOK NOTATION 7.5 GY 5/4	–
SAFETY YELLOW.....	OGS # NY 35	13591
GRAY.....	OGS # NY 16	16231
MONROE-TAN.....	OGS # NY 15	20450
WEATHERED BROWN..	–	20059

THE OGS COLOR DESIGNATIONS LISTED ABOVE ARE FROM THE NEW YORK STATE OFFICE OF GENERAL SERVICES COLOR SELECTOR. THE ABOVE EQUIVALENT FEDERAL COLOR DESIGNATION ARE FROM FEDERAL STANDARD 595 B.

III. ALL PAINT FURNISHED UNDER THE SAME ITEM NUMBER SHALL UTILIZE THE SAME LOT OF PAINT, BY THE SAME MANUFACTURER.

IV. THE COLOR CHIP FOR ALL PAINT WITH THE SAME FINISH COLOR SHALL BE SUBMITTED TO THE ENGINEER FOR APPROVAL AT THE SAME TIME. ALL FINISH COATS OF THE SAME COLOR SHALL BE INDISTINGUISHABLE FROM EACH OTHER.

V. METAL TO METAL CONTACT SURFACES OF BOLTED CONNECTIONS SHALL BE PRIME COATED ONLY IN ACCORDANCE WITH THE PAINT MANUFACTURERS RECOMMENDATIONS TO ACHIEVE A MINIMUM COEFFICIENT OF FRICTION OF 0.50 (AASHTO CLASS B COATING), UNLESS OTHERWISE NOTED IN THE CONTRACT DOCUMENTS.

VI. PAINT SHALL NOT BE APPLIED TO METAL SURFACES WITHIN 3" OF ANY AREA WHERE FIELD WELDS WILL BE MADE, OR WITHIN 3" OF ANY BOLT ON THE OUTER PLIES OF ANY FIELD BOLTED ASSEMBLY, NOR TO SURFACES TO BE EMBEDDED IN CONCRETE.

VII. THE CONTRACTOR SHALL APPLY PAINT TO AREAS OF PAINT DAMAGE AND FIELD WELDED AREAS, AFTER FIELD ERECTION, AND AFTER WELDING HAS BEEN ACCEPTED IN ACCORDANCE WITH THE SPECIFICATIONS.

VIII. THE CONTRACTOR IS ADVISED THAT THE EXISTING PAINT MAY CONTAIN LEAD.

IX. ALL NEW PAINT USED IN THIS CONTRACT SHALL BE LEAD FREE.

X. PAINT SHALL NOT BE APPLIED TO ANY WIRING OR MATING SURFACES OF OPERATING MACHINERY.

XI. FOR ADDITIONAL CLEANING AND PAINTING REQUIREMENTS REFER TO THE PAINTING SPECIFICATION.

XII. GALVANIZING SHALL CONFORM TO NYS MATERIAL SPECIFICATION 719-01.

QUALITY CONTROL (QC)/QUALITY ASSURANCE (QA):

I. THE CONTRACTOR/FABRICATOR IS RESPONSIBLE FOR QC AND THE AUTHORITY MAY PERFORM QA AS DESCRIBED IN SECTION 3 OF THE NYSSCM. ANY QA PERFORMED BY THE AUTHORITY WILL NOT RELIEVE THE CONTRACTOR OF HIS RESPONSIBILITY TO PERFORM BOTH QC AND QA INSPECTION TESTS TO INSURE THAT HIS PRODUCTS MEET THE REQUIREMENTS OF THE CONTRACT DOCUMENTS AND SHALL NOT RELIEVE THE CONTRACTOR OF HIS RESPONSIBILITY CONCERNING UNACCEPTABLE MATERIALS AND WORKMANSHIP AND THE RESPONSIBILITY TO ACCEPTABLY REPAIR OR REPLACE THE SAME AS DESCRIBED IN ARTICLE 306 OF THE NYSSCM.

II. THE AUTHORITY WILL INSPECT ALL STEEL AT THE TIME OF DELIVERY FOR WORKMANSHIP, FIT, AND CONFORMANCE TO THE CONTRACT DOCUMENTS. ANY MATERIAL WITH DEFECTS, DEFICIENCIES, UNAPPROVED CHANGES OR REPAIRS WILL BE CAUSE FOR IMMEDIATE REJECTION. REJECTED STEEL SHALL BE REMOVED AND REPLACED, OR REPAIRED BY A PROCEDURE APPROVED BY THE AUTHORITY'S METALS ENGINEERING UNIT AT NO ADDITIONAL COST TO THE AUTHORITY.

ABBREVIATIONS AND DEFINITIONS:

AWS	AMERICAN WELDING SOCIETY, CURRENT EDITION
NYSSCM	NEW YORK STATE STEEL CONSTRUCTION MANUAL, CURRENT EDITION WITH ALL ADDENDUM'S
FCM	FRACTURE CRITICAL MEMBER
WPS	WELD PROCEDURE SPECIFICATION
PQR	PROCEDURE QUALIFICATION RECORD
CPGW	COMPLETE PENETRATION GROOVE WELD
PPGW	PARTIAL PENETRATION GROOVE WELD

MP MAGNETIC PARTICLE TESTING:

I. WHEN SPECIFIED, MAGNETIC PARTICLE TESTING SHALL BE PERFORMED PER SECTION 5, OF THE NYSSCM.

II. MP TESTING SHALL BE PERFORMED WITH THE YOKE TECHNIQUE ONLY.

III. MP TESTING SHALL BE PERFORMED BY A TECHNICIAN CURRENTLY ASNT CERTIFIED.

UT ULTRASONIC TESTING:

I. WHEN SPECIFIED, ULTRASONIC TESTING IS TO BE PERFORMED PER SECTION 5, OF THE NYSSCM.

II. ULTRASONIC TESTING IS TO BE PERFORMED BY A NEW YORK STATE CERTIFIED TECHNICIAN.

ALTERED ON:	AFFIXED ON: 6-21-16
SIGNATURE: STAMP:	SIGNATURE: STAMP: STATE OF NEW YORK · F. DAVID HUDDA · 061048 · LICENSED PROFESSIONAL ENGINEER

IT IS A VIOLATION OF LAW FOR ANY PERSON, UNLESS THEY ARE ACTING UNDER THE DIRECTION OF A LICENSED PROFESSIONAL ENGINEER, ARCHITECT, LANDSCAPE ARCHITECT, OR LAND SURVEYOR, TO ALTER AN ITEM IN ANY WAY. IF AN ITEM BEARING THE STAMP OF A LICENSED PROFESSIONAL IS ALTERED, THE ALTERING ENGINEER, ARCHITECT, LANDSCAPE ARCHITECT, OR LAND SURVEYOR SHALL STAMP THE DOCUMENT AND INCLUDE THE NOTATION "ALTERED BY" FOLLOWED BY THEIR SIGNATURE. THE DATE OF SUCH ALTERATION, AND A SPECIFIC DESCRIPTION OF THE ALTERATION.

REVISIONS

DATE	DESCRIPTION	BY	SYM.

NEW YORK STATE THRUWAY AUTHORITY
DEPARTMENT OF ENGINEERING
200 SOUTHERN BLVD., ALBANY, N.Y. 12209

TITLE OF PROJECT: LOCK E-32 BYPASS CULVERT REPAIR
LOCATION OF PROJECT: TOWN OF PITTSFORD, MONROE COUNTY
TITLE OF DRAWING: METAL FABRICATION NOTES I

CONTRACT NUMBER: TAB 16-26C
DATE: 6/17/16
DRAWING NUMBER: ST-1

2018\394058\Design\Plans\METAL FABRICATION NOTES.dgn
CHECKED BY: D. HUDDA
DRAFTED BY: J.S. LeBLANC
DESIGNED BY: J.S. LeBLANC
CHECKED BY: D. HUDDA
DESIGN SUPERVISOR: R. KARIS

RT RADIOGRAPHIC TESTING:

I. WHEN SPECIFIED, RADIOGRAPHIC TESTING SHALL BE PERFORMED PER SECTION 5, OF THE NYSSCM.

II. RADIOGRAPHIC TESTING SHALL BE PERFORMED BY A TECHNICIAN CURRENTLY ASNT LEVEL II CERTIFIED.

HT HARDNESS TESTING:

WHEN SPECIFIED, ANY WELD REMOVAL AREAS HARDER THAN ROCKWELL C27 SHALL BE REJECTED.

REPAIR REQUIREMENTS:

I. ANY REPAIRS TO STRUCTURAL STEEL MEMBER SHALL NOT BE PERFORMED UNTIL:

A. THE REPAIR PROCEDURE, CONSISTING OF THE FOLLOWING, AS A MINIMUM, HAS BEEN APPROVED BY THE AUTHORITY'S METALS ENGINEERING UNIT:

1. GOVERNING WELDING CODE.
2. ELECTRODE DATA AND ELECTRODE STORAGE DATA
3. JOINT PREPARATION REQUIREMENTS INCLUDING CLEANING
4. PREHEAT REQUIREMENTS
5. POSTHEAT REQUIREMENTS
6. FABRICATION TOLERANCES
7. FINISH REQUIREMENTS
8. COATING REQUIREMENTS FOR PAINTING OR GALVANIZING
9. WPS'S AND ASSOCIATED POR'S
10. INSPECTION REQUIREMENTS
11. SKETCHES
12. WELDER CERTIFICATION REQUIREMENTS
13. MATERIAL REQUIREMENTS

B. THE WELDERS HAVE BEEN CERTIFIED.

C. THE WPS HAS BEEN SUBMITTED AND APPROVED, BY THE AUTHORITY'S METALS ENGINEERING UNIT, FOR EACH JOINT IN THE REPAIR.

D. THE POR HAS BEEN SUBMITTED TO THE AUTHORITY'S METALS ENGINEERING UNIT, FOR EACH PROCESS TO BE USED IN THE REPAIR.

II. DUE TO WELDABILITY CONCERNS OF EXISTING STEEL THAT HAS BEEN INSTALLED PRIOR TO THE MID-SIXTIES, THE CONTRACTOR IS ADVISED THAT BOLTED CONNECTIONS FOR ANY PERMANENT OR TEMPORARY ATTACHMENTS TO THE EXISTING STEEL ARE PREFERRED.

III. ANY PLUG WELD SHALL BE REJECTED. ONLY SLOT WELDS IN ACCORDANCE WITH NYSSCM APPENDIX A WILL BE PERMITTED.

IV. WELDING TO CAST IRON SHALL NOT BE PERMITTED.

V. ANY MEMBER THAT HAS BEEN REPAIRED, OR IS BEING REPAIRED, WITHOUT PRIOR APPROVAL OF THE REPAIR PROCEDURE SHALL BE REJECTED, AND A NEW MEMBER FABRICATED AT NO ADDITIONAL COST TO THE AUTHORITY.

FABRICATIONS REQUIRING SHOP DRAWINGS:

I. THE GENERAL REQUIREMENTS SHALL ALSO APPLY.

II. ANY MEMBER THAT HAS BEEN WELDED WITH UNAPPROVED; MILL CERTIFICATIONS, CATALOG CUT SHEETS, SHOP DRAWINGS, WPS, AND POR, HAS; MISPLACED BOLT HOLES, MATERIAL DEFECTS OR DISCONTINUITIES, OR THAT HAS BEEN WELDED BY AN UNQUALIFIED WELDER WILL BE CAUSE FOR IMMEDIATE REJECTION. REJECTED STEEL SHALL BE REMOVED AND REPLACED, OR REPAIRED BY A PROCEDURE APPROVED BY THE AUTHORITY'S METALS ENGINEERING UNIT AT NO ADDITIONAL COST TO THE AUTHORITY.

III. GOVERNING FABRICATION AND WELDING SPECIFICATION:

A. THE FABRICATION AND WELDING OF ALL FILLET WELDS AND CPGW'S ON STEEL MEMBERS SHALL BE PERFORMED IN ACCORDANCE WITH THE CURRENT EDITION OF THE NYSSCM, INCLUDING ANY CURRENT ADDENDA.

B. THE FABRICATION AND WELDING OF ALL PPGW'S ON STEEL MEMBERS SHALL BE PERFORMED IN ACCORDANCE WITH THE CURRENT EDITION OF THE AMERICAN WELDING SOCIETY'S BRIDGE WELDING CODE – D1.5.

C. THE FABRICATION AND WELDING OF ALL TACK, FILLET, PPGW'S, AND CPGW'S ON STAINLESS STEEL MEMBERS SHALL BE PERFORMED IN ACCORDANCE WITH THE CURRENT EDITION OF THE AMERICAN WELDING SOCIETY'S STAINLESS STEEL WELDING CODE – D1.6.

D. THE FABRICATION AND WELDING OF ALUMINUM SHALL BE PERFORMED IN ACCORDANCE WITH THE CURRENT EDITION OF THE AMERICAN WELDING SOCIETY'S BRIDGE WELDING CODE – D1.2.

IV. ALL STRUCTURAL STEEL PLATES AND SHAPES IN TENSION OR COMPRESSION, AND NOT DESIGNATED AS FCM, SHALL BE FURNISHED MEETING THE MINIMUM CHARPY V-NOTCH TOUGHNESS REQUIREMENTS FOR TENSION MEMBERS IN ACCORDANCE WITH SECTION 715-01 OF THE NEW YORK STATE DEPARTMENT OF TRANSPORTATION STANDARD SPECIFICATIONS. TESTING SHALL BE AT THE "H" (HEAT-LOT) FREQUENCY.

V. SHOP OR FIELD WELDING SHALL NOT BE PERFORMED ON ANY STEEL MEMBER UNTIL:

A. MILL CERTIFICATIONS, CATALOG CUT SHEETS, AND SHOP DRAWINGS HAVE BEEN SUBMITTED AND EITHER "APPROVED" OR "APPROVED AS NOTED".

B. A COPY OF THE WELDER QUALIFICATIONS HAS BEEN SUBMITTED AND APPROVED BY THE ENGINEER, FOR ALL PERSONNEL WHO WILL BE WELDING ON THE WORK.

C. THE WPS HAS BEEN SUBMITTED AND APPROVED, BY THE AUTHORITY'S METALS ENGINEERING UNIT, FOR EACH JOINT IN THE WORK.

D. THE POR HAS BEEN SUBMITTED AND APPROVED, BY THE AUTHORITY'S METALS ENGINEERING UNIT, FOR EACH PROCESS TO BE USED IN THE WORK.

VI. WELDER, WELDING OPERATOR, AND TACKER REQUIREMENTS:

A. ALL TACK, FILLET AND CPGW'S SHALL BE PERFORMED BY WELDERS CURRENTLY QUALIFIED FOR THE POSITION, PROCESS AND LOCATION (FIELD OR SHOP) TO BE USED IN THE WORK IN ACCORDANCE WITH SECTION 5, NYSSCM.

B. ALL PPGW'S SHALL BE PERFORMED BY WELDERS CURRENTLY QUALIFIED FOR THE POSITION, PROCESS AND LOCATION (FIELD OR SHOP) TO BE USED IN THE WORK IN ACCORDANCE WITH SECTION 5 OF AWS D1.5.

C. ALL TACK, FILLET, PPGW'S, AND CPGW'S ON STAINLESS STEEL MEMBERS SHALL BE PERFORMED BY WELDERS CURRENTLY QUALIFIED FOR THE POSITION, PROCESS AND LOCATION (FIELD OR SHOP) TO BE USED IN THE WORK IN ACCORDANCE WITH THE CURRENT EDITION OF THE AMERICAN WELDING SOCIETY'S STAINLESS STEEL WELDING CODE – D1.6.

D. ALL TACK, FILLET, PPGW'S, AND CPGW'S ON ALUMINUM MEMBERS SHALL BE PERFORMED BY WELDERS CURRENTLY QUALIFIED FOR THE POSITION, PROCESS AND LOCATION (FIELD OR SHOP) TO BE USED IN THE WORK IN ACCORDANCE WITH THE CURRENT EDITION OF THE AMERICAN WELDING SOCIETY'S ALUMINUM WELDING CODE – D1.2.

VII. TEMPORARY AND TACK WELDS:

A. TEMPORARY WELDED ATTACHMENTS TO TENSION AREAS, AND TACK WELDS NOT INCORPORATED INTO THE FINAL WELD ARE NOT PERMITTED ON MEMBERS SUBJECT TO TENSILE STRESS, AND WILL BE CAUSE FOR IMMEDIATE REJECTION OF THE ASSOCIATED COMPONENT. REJECTED COMPONENTS SHALL BE REMOVED AND REPLACED, OR REPAIRED BY A PROCEDURE APPROVED BY THE AUTHORITY'S METALS ENGINEERING UNIT AT NO ADDITIONAL COST TO THE AUTHORITY.

B. PREHEAT IS REQUIRED FOR FIELD WELDED TEMPORARY OR TACK WELDS.

C. PREHEAT IS REQUIRED WHEN A TACK WELD IS NOT INCORPORATED INTO THE FINAL SUBMERGED ARC WELD.

D. TEMPORARY OR TACK WELDS NOT INCORPORATED INTO THE FINAL WELD SHALL BE GROUND FLUSH WITH THE ORIGINAL SURFACE.

VIII. BOLTED CONNECTIONS:

A. BOLTING OR THE DRILLING OF BOLT HOLES SHALL NOT BE PERFORMED ON ANY STEEL MEMBER UNTIL MILL CERTIFICATIONS, CATALOG CUT SHEETS, AND SHOP DRAWINGS HAVE BEEN SUBMITTED AND EITHER "APPROVED" OR "APPROVED AS NOTED".

B. BOLT HOLES SHALL NOT BE INSTALLED UNLESS SPECIFICALLY AND ACCURATELY DIMENSIONED ON THE SHOP DRAWINGS. MAXIMUM AND MINIMUM BOLT SPACING, EDGE DISTANCE, STAGGER, AND SEALING SPACINGS SHALL BE IN ACCORDANCE WITH LATEST EDITION OF A.A.S.H.T.O.

C. ALL BOLT HOLES IN MATERIAL SHALL BE MADE IN ACCORDANCE WITH SECTION 613, 614 AND 1103 OF THE NYSSCM AS APPROPRIATE. AS AN ALTERNATE TO THE PROVISIONS OF THE NYSSCM, FULL SIZED BOLT HOLES MAY BE DRILLED USING ONE COMPONENT AS A TEMPLATE, PROVIDING ALL HOLES ARE DRILLED WITH A HOUGEN OR JANCY BIT. TWIST DRILLS SHALL NOT BE PERMITTED.

IX. SUBMITTAL REQUIREMENTS:

A. TWO COPIES OF THE MILL CERTIFICATES, INCLUDING CHEMICAL AND PHYSICAL TEST RESULTS, FOR ALL BASE METAL AND BOLTING MATERIALS INDICATING CONFORMANCE WITH THE SPECIFICATIONS.

B. TWO CERTIFICATES OF CONFORMANCE SHALL BE SUPPLIED FOR ALL GALVANIZED COATINGS.

C. CLEANING AND PAINTING DATA INDICATING CONFORMANCE WITH THE SPECIFICATIONS. THE DATA SHALL INCLUDE THE FOLLOWING MINIMUM INFORMATION:

1. PAINT MANUFACTURER WITH MATERIAL SAFETY DATA SHEETS.
2. SURFACE PREPARATION.
3. COATING THICKNESSES.
4. ENVIRONMENTAL LIMITATIONS FOR TEMPERATURE, HUMIDITY, ETC.
5. LIMITS OF AREAS TO BE LEFT UNCOATED, OR ONLY PRIMED.
6. APPLICATION METHODS.

D. TWO COPIES OF THE CURRENT CERTIFICATION FOR EACH WELDER PERFORMING THE WORK.

E. SHOP DRAWINGS:

1. SHOP DRAWINGS SHALL BE REQUIRED IN ACCORDANCE WITH THE N.Y.S.S.C.M.
2. SHALL HAVE BEEN REVIEWED BY THE CONTRACTOR AND ANY FIELD VERIFICATIONS PERFORMED PRIOR TO SUBMISSION TO THE ENGINEER.
3. SHOP DRAWINGS SHALL INCLUDE, AS A MINIMUM:

a. PROJECT IDENTIFICATION.
APPLICABLE SPECIFICATIONS FOR MATERIALS, FABRICATION AND WELDING.

b. ALL DIMENSIONS AND LABELING NECESSARY TO CUT AND FABRICATE EACH PIECE AND TO ASSEMBLE THE PIECES.

c. FABRICATION TOLERANCES.

d. ALL MATERIAL REQUIREMENTS, INCLUDING ANY SPECIAL FCM REQUIREMENTS, AND A STATEMENT OF DOMESTIC ORIGIN FOR ALL BASE METAL, BOLTING MATERIALS, ELECTRODES, ETC.

e. NON-DESTRUCTIVE TESTING REQUIREMENTS.

f. REFERENCES TO ALL WPS'S.

g. COATING REQUIREMENTS, INCLUDING ANY CLEANING PREPARATIONS.

h. REFERENCES TO PAY ITEMS.

4. EACH SHOP DRAWING SHALL HAVE A BLANK AREA, NEXT TO THE TITLE BLOCK, FOR THE AUTHORITY'S APPROVAL STAMP AT LEAST 3" TALL BY 4" WIDE FOR 22 x 34 INCH SHOP DRAWINGS, OR AT LEAST 2 x 2 INCH FOR 11 x 17 INCH OR 8.5 x 11 INCH SHOP DRAWINGS.

F. CATALOG CUT SHEETS:

COPIES OF THE MANUFACTURERS "CATALOG CUT SHEETS" SHALL BE SUBMITTED FOR APPROVAL, SHOWING ALL DETAILS, DIMENSIONS, MATERIALS AND OTHER PERTINENT DATA, AS DETERMINED BY THE ENGINEER, FOR ALL PROPRIETARY ITEMS INCORPORATED INTO THE WORK.

G. WELDING PROCEDURE SPECIFICATIONS (WPS):

1. A WPS, USING A FORM SIMILAR TO NYSSCM FORM BD190, SHALL BE SUBMITTED FOR EACH JOINT, EACH PROCESS, AND EACH ELECTRODE OR ELECTRODE FLUX COMBINATION TO BE USED IN THE WORK.
2. EACH WPS SHALL CONTAIN ALL OF THE REQUIRED WELDING PARAMETERS PER SECTION 5, OF THE GOVERNING SPECIFICATION, INCLUDING AN ACCURATE SKETCH OF THE WELD AND IN THE ORIENTATION THAT THE WELD WILL BE PERFORMED.

H. PROCEDURE QUALIFICATION RECORD (POR):

1. A POR IS NOT REQUIRED FOR SMAW (OR STICK), PROVIDED THE WELDING PARAMETERS CONFORM TO THE ELECTRODE MANUFACTURER RECOMMENDATIONS.
2. A POR, USING A FORM SIMILAR TO NYSSCM FORM BD177A, SHALL BE SUBMITTED FOR EACH OTHER TYPE OF WELDING PROCESS (ELECTRODE OR ELECTRODE FLUX COMBINATION) THAT WILL BE USED IN EACH SUBMITTED WPS PER SECTION 5, OF THE GOVERNING SPECIFICATION.
3. A POR IS VALID FOR 3 YEARS FROM DATE OF ACCEPTANCE BY EITHER NYSDOT OR NYSTWY/CC.

I. CHANGES/REPAIRS:

1. ANY DEVIATIONS FROM THE APPROVED SHOP DRAWING, MATERIAL DEFECTS OR DISCONTINUITIES SHALL BE FULLY AND ACCURATELY DESCRIBED, AND IMMEDIATELY SUBMITTED TO THE AUTHORITY'S METALS ENGINEERING UNIT FOR EVALUATION.
2. IF DIRECTED BY THE AUTHORITY'S METALS ENGINEERING UNIT, THE FABRICATOR SHALL PREPARE AND SUBMIT FOR APPROVAL, A REPAIR PROCEDURE IN ACCORDANCE WITH THE REPAIR REQUIREMENTS NOTED ABOVE.
3. REPAIRS SHALL BE MADE IN ACCORDANCE WITH THE APPROVED REPAIR PROCEDURE.

X. SHIPMENT:

STEEL MEMBERS REQUIRING SHOP DRAWINGS SHALL NOT BE SHIPPED UNTIL:

A. ALL REQUIRED SUBMITTALS HAVE BEEN SUBMITTED AND APPROVED BY THE AUTHORITY'S METALS ENGINEERING UNIT.

B. ANY REQUIRED REPAIRS HAVE BEEN MADE IN ACCORDANCE WITH THE REPAIR REQUIREMENTS NOTED ABOVE.

C. THE FINAL SHOP DRAWING MYLARS WITH ALL AS-BUILT CHANGES AND REPAIRS HAVE BEEN SUBMITTED AND APPROVED BY THE AUTHORITY'S METALS ENGINEERING UNIT.

XI. THE FABRICATOR SHALL BE CURRENTLY CERTIFIED BY THE AMERICAN INSTITUTE OF STEEL CONSTRUCTION FOR THE FABRICATION OF SIMPLE STEEL BRIDGES (SBR) UNLESS OTHERWISE NOTED IN THE CONTRACT DOCUMENTS.

ALTERED ON:	AFFIXED ON: 6-21-16
SIGNATURE: STAMP:	SIGNATURE: STAMP: STATE OF NEW YORK · F. DAVID HUDDA · LICENSED PROFESSIONAL ENGINEER · 061048

IT IS A VIOLATION OF LAW FOR ANY PERSON, UNLESS THEY ARE ACTING UNDER THE DIRECTION OF A LICENSED PROFESSIONAL ENGINEER, ARCHITECT, LANDSCAPE ARCHITECT, OR LAND SURVEYOR, TO ALTER AN ITEM IN ANY WAY. IF AN ITEM BEARING THE STAMP OF A LICENSED PROFESSIONAL IS ALTERED, THE ALTERING ENGINEER, ARCHITECT, LANDSCAPE ARCHITECT, OR LAND SURVEYOR SHALL STAMP THE DOCUMENT AND INCLUDE THE NOTATION "ALTERED BY" FOLLOWED BY THEIR SIGNATURE. THE DATE OF SUCH ALTERATION, AND A SPECIFIC DESCRIPTION OF THE ALTERATION.

REVISIONS

DATE	DESCRIPTION	BY	SYM.

NEW YORK STATE THRUWAY AUTHORITY
DEPARTMENT OF ENGINEERING
200 SOUTHERN BLVD., ALBANY, N.Y. 12209

TITLE OF PROJECT: LOCK E-32 BYPASS CULVERT REPAIR
LOCATION OF PROJECT: TOWN OF PITTSFORD MONROE COUNTY
TITLE OF DRAWING: METAL FABRICATION NOTES II

CONTRACT NUMBER: TAB 16-26C
DATE: 6/17/16
DRAWING NUMBER: ST-2

TABLE OF METALS

METAL MEMBER OR PART	APPROXIMATE QUANTITY OF MEMBERS	DETAILS ON DRAWING	APPROXIMATE WT. FOR (POUNDS)	NEW METAL ITEM NUMBER	SHOP DRAWINGS REQUIRED (Y/N)	INCLUDES FCM (Y/N)	COATING				
							FINISH COLOR OR GALVANIZED	COATING ITEM NUMBER	APPROX. SURFACE AREA (SF)	PAINT CLEANING LOCATION	TREATMENT & DISPOSAL OF PAINT ITEM NUMBER
NEW STEEL:											
ANGLE GRATING SUPPORT FRAME	1	CP-13	116	564.0501	Y	N	RED	570.92930112	24	SHOP	N/A
TRASH RACK RODS	6	TR-1	73	564.0502	Y	N	UNCOATED	N/A	N/A	N/A	N/A
VALVE SEAT (THIMBLE) AND SUPPORT LINING	1	VA-1, 2, 3	4,395	564.05015012	Y	N	GALVANIZED	N/A	N/A	N/A	N/A
TRASH RACK GRATE BARS	12	TR-1	205	564.05045012	Y	N	GALVANIZED	N/A	N/A	N/A	N/A
COUNTERWEIGHT GUIDERAILS	2	VA-1, 2, 3	874	665.15420012	Y	N	GALVANIZED	N/A	N/A	N/A	N/A
GRATING - VALVE WELL	58.5 SF	CP-13	750	665.2009--12	Y	N	GALVANIZED	N/A	N/A	N/A	N/A
VENT PIPE (COMPLETE WITH FITTINGS)	1	CP-11	176	690.02000625	N	N	*	570.92410112	3	FIELD	N/A
VENT PIPE COVER ASSEMBLY	1	CP-11	24	690.02000625	N	N	**	570.92410212	2	FIELD	N/A
SECONDARY INLET TRASH RACK	1	IN-1	260	564.0503	Y	N	GALVANIZED	N/A	N/A	N/A	N/A
STEEL CASTINGS:											
TRANSITION CAP	1	VA-1, 2, 3	853	656.01	Y	N	UNCOATED	N/A	N/A	N/A	N/A
VALVE WELL HEADER	1	VA-1, 2, 3	158	665.46030012	Y	N	UNCOATED	N/A	N/A	N/A	N/A
VALVE WELL GUIDE RAILS	2	VA-1, 2, 3	596	665.46030012	Y	N	UNCOATED	N/A	N/A	N/A	N/A

* = PAINT EXPOSED PORTION OF VENT PIPE CANAL BLUE (NY 30 BLUE) AFTER INSTALLATION.
** = IF A NEW FABRICATION IS REQUIRED, OR A RECOATING IS REQUIRED ON THE RE-USED COVER, USE CHROME YELLOW (NY 27 YELLOW). A NEW FABRICATION OR EXISTING COVER MAY BE PAINTED IN THE SHOP A.O.B.E.

2016\394058\Design\Plans\METAL FABRICATION NOTES.dgn
DRAFTED BY: J.S. LeBLANC
CHECKED BY: D. HUDDA
DESIGNED BY: J.S. LeBLANC
CHECKED BY: D. HUDDA
DESIGN SUPERVISOR: R. KARIS

ALTERED ON:	AFFIXED ON: 6-21-16
SIGNATURE: STAMP:	SIGNATURE: STAMP: STATE OF NEW YORK · F. DAVID HUDDA · 061048 · LICENSED PROFESSIONAL ENGINEER

IT IS A VIOLATION OF LAW FOR ANY PERSON, UNLESS THEY ARE ACTING UNDER THE DIRECTION OF A LICENSED PROFESSIONAL ENGINEER, ARCHITECT, LANDSCAPE ARCHITECT, OR LAND SURVEYOR, TO ALTER AN ITEM IN ANY WAY. IF AN ITEM BEARING THE STAMP OF A LICENSED PROFESSIONAL IS ALTERED, THE ALTERING ENGINEER, ARCHITECT, LANDSCAPE ARCHITECT, OR LAND SURVEYOR SHALL STAMP THE DOCUMENT AND INCLUDE THE NOTATION "ALTERED BY" FOLLOWED BY THEIR SIGNATURE. THE DATE OF SUCH ALTERATION, AND A SPECIFIC DESCRIPTION OF THE ALTERATION.

REVISIONS

DATE	DESCRIPTION	BY	SYM.

NEW YORK STATE THRUWAY AUTHORITY
DEPARTMENT OF ENGINEERING
200 SOUTHERN BLVD., ALBANY, N.Y. 12209

TITLE OF PROJECT: LOCK E-32 BYPASS CULVERT REPAIR
LOCATION OF PROJECT: TOWN OF PITTFORD MONROE COUNTY
TITLE OF DRAWING: TABLE OF METALS

CONTRACT NUMBER: TAB 16-26C
DATE: 6/17/16
DRAWING NUMBER: ST-3

2016\394058\Design\Plans\LOCK E-32 SITE PLAN 20.dgn
CHECKED BY: D. HUDDA
DRAFTED BY: J.S. LeBLANC
CHECKED BY: D. HUDDA
DESIGNED BY: J.S. LeBLANC
DESIGN SUPERVISOR: R. KARIS

WOODS

ACCESS CONTROL GATE

TOP OF SLOPE (REVETMENT)

APPROXIMATE SHORELINE

ERIE CANAL

65

TRAIL ACCESS DRIVE

WOODS

BYPASS CULVERT INLET

STOP LOG WELL

FACE OF UPPER APPROACH WALL

BYPASS CULVERT

FLOW

℄ CANAL

ACCESS ROAD

BYPASS CULVERT VALVE WELL

℄ LOCK

OBSERVATION PLATFORM

CANALWAY TRAIL

LOCK E-32

SPILLWAY

ACCESS ROAD

FLOW

KAYAK COURSE

LOCKHOUSE

APPROXIMATE SHORELINE

ERIE CANAL

LOWER GUIDE WALL

OE

W

OE

BYPASS CULVERT OUTLET

ACCESS ROAD

WOODS

SPILLWAY

WOODS

OE

ACCESS DRIVE

LEGEND

- DIRECTION OF FLOW
- DIRECTION OF TRAVEL
- STONE REVETMENT
- SUBSTRUCTURE
- UNPAVED TRAIL
- OE – OVERHEAD ELECTRIC
- W – UNDERGROUND WATER
- LIGHT STANDARD
- UTILITY POLE
- MANHOLE - WATER

ALTERED ON:	AFFIXED ON: 6-21-16
SIGNATURE: STAMP:	SIGNATURE: STAMP: STATE OF NEW YORK · F. DAVID HUDDA · 061048 · LICENSED PROFESSIONAL ENGINEER

IT IS A VIOLATION OF LAW FOR ANY PERSON, UNLESS THEY ARE ACTING UNDER THE DIRECTION OF A LICENSED PROFESSIONAL ENGINEER, ARCHITECT, LANDSCAPE ARCHITECT, OR LAND SURVEYOR, TO ALTER AN ITEM IN ANY WAY. IF AN ITEM BEARING THE STAMP OF A LICENSED PROFESSIONAL IS ALTERED, THE ALTERING ENGINEER, ARCHITECT, LANDSCAPE ARCHITECT, OR LAND SURVEYOR SHALL STAMP THE DOCUMENT AND INCLUDE THE NOTATION "ALTERED BY" FOLLOWED BY THEIR SIGNATURE. THE DATE OF SUCH ALTERATION, AND A SPECIFIC DESCRIPTION OF THE ALTERATION.

REVISIONS

DATE	DESCRIPTION	BY	SYM.

NEW YORK STATE THRUWAY AUTHORITY
DEPARTMENT OF ENGINEERING
200 SOUTHERN BLVD., ALBANY, N.Y. 12209

TITLE OF PROJECT: LOCK E-32 BYPASS CULVERT REPAIR

LOCATION OF PROJECT: TOWN OF PITTSFORD MONROE COUNTY

TITLE OF DRAWING: SITE PLAN

CONTRACT NUMBER: TAB 15-26C

DATE: 6/17/16

DRAWING NUMBER: SP-1

TEXT	M.U.T.C.D. NUMBER	SIZE OF SIGN	BACKGROUND	LEGEND/SYMBOL
	W11-10	36" x 36"	ORANGE (RETRO-REFLECTIVE)	BLACK
CONSTRUCTION ENTRANCE AHEAD	NOT APPLICABLE	PANEL: 60" x 36" LETTERS: 6" SERIES "C"	ORANGE (RETRO-REFLECTIVE)	BLACK

WORK ZONE TRAFFIC CONTROL NOTES:

1. THE WORK ZONE TRAFFIC CONTROL PLAN IS NOT INTENDED TO BE ALL INCLUSIVE, BUT RATHER SERVE AS A GUIDE FOR THE SAFE AND EFFICIENT SEQUENCE OF CONSTRUCTION OPERATIONS. ANY ADDITIONS OR REVISIONS TO THIS TRAFFIC CONTROL PLAN SHALL BE AS DIRECTED BY THE ENGINEER.
2. TEMPORARY PROTECTION DEVICES OR DELINEATION SHALL BE INSTALLED AS ORDERED BY THE ENGINEER.
3. SAFE AND ADEQUATE INGRESS AND EGRESS TO AND FROM INTERSECTING ROADS SHALL BE MAINTAINED AT ALL TIMES TO THE SATISFACTION OF THE ENGINEER.
4. AT ALL TIMES DURING CONSTRUCTION, THE CONTRACTOR SHALL PROVIDE SAFE AND CONVENIENT EMERGENCY ACCESS. LOCAL FIRE, POLICE, AND AMBULANCE AGENCIES SHALL BE NOTIFIED BY THE CONTRACTOR PRIOR TO THE START OF WORK, IN ORDER TO COORDINATE AND MAINTAIN SUFFICIENT EMERGENCY SERVICES.
5. "CONSTRUCTION ENTRANCE AHEAD" PANEL SHALL BE PLACED 1000 FEET IN ADVANCE OF THE CONSTRUCTION ENTRANCE, A.O.B.E.
6. W11-10 SIGNS SHALL BE USED TO ACCURATELY INDICATE ALL ENTRANCES USED BY THE CONTRACTOR. SIGNS SHALL BE PLACED 500 FEET IN ADVANCE OF THE CONSTRUCTION ENTRANCE, A.O.B.E.
7. CONSTRUCTION SIGNS SHALL BE PROVIDED AND MAINTAINED IN ACCORDANCE WITH ITEM 619.01.
8. DURING THE NON-WORKING HOURS, ALL CONSTRUCTION EQUIPMENT AND MATERIALS SHALL BE STORED A MINIMUM OF 30 FEET FROM ROUTE 65.
9. THE CONTRACTOR SHALL PROVIDE A SUFFICIENT NUMBER OF COMPETENT FLAGGERS IN AREAS WHERE CONSTRUCTION EQUIPMENT IS OPERATING IN POTENTIAL CONFLICT WITH PUBLIC TRAFFIC, REGARDLESS OF THE VOLUME OF TRAFFIC, OR THE SIGHT DISTANCE. FLAGGERS SHALL WEAR HIGH-VISIBILITY APPAREL AND ORANGE HARD HATS IN CONFORMANCE WITH THE STANDARD SPECIFICATIONS AND PROVISIONS OF THE CONTRACT PROPOSAL. FLAGGERS SHALL DIRECT TRAFFIC IN CONFORMANCE WITH THE M.U.T.C.D. SIGN PADDLES SHALL BE THE PREFERRED HAND-SIGNALING DEVICE.
10. ALL TRAFFIC SIGNS AND DEVICES SHALL CONFORM TO THE MANUAL ON UNIFORM TRAFFIC CONTROL DEVICES (M.U.T.C.D.) AND THE NEW YORK STATE SUPPLEMENT, AND THE CONTRACT DOCUMENTS. SIGN LOCATIONS ARE APPROXIMATE. EXACT LOCATIONS AND REQUIRED SIZE AND TYPE OF SIGNS USED MAY BE MODIFIED BY THE ENGINEER, IN CONFORMANCE WITH THE M.U.T.C.D.
11. WORK ZONE TRAFFIC CONTROL SIGNAGE ILLUSTRATED ON THIS PLAN IS THE MINIMUM ONLY. ADDITIONAL SIGNAGE MAY BE REQUIRED TO MEET TRAFFIC AND/OR FIELD CONDITIONS, AS DETERMINED BY THE ENGINEER. ADDITIONAL SIGNAGE SHALL BE PAID FOR UNDER ITEM 619.01.
12. ALL PRIVATE VEHICLES SHALL BE PARKED OUTSIDE OF THE WORK ZONE AND OFF OF ANY TRAVELLED WAY OR THE CANALWAY TRAIL, OR AS OTHERWISE DIRECTED BY THE ENGINEER.

LEGEND

- SIGN
- TRAFFIC FLOW

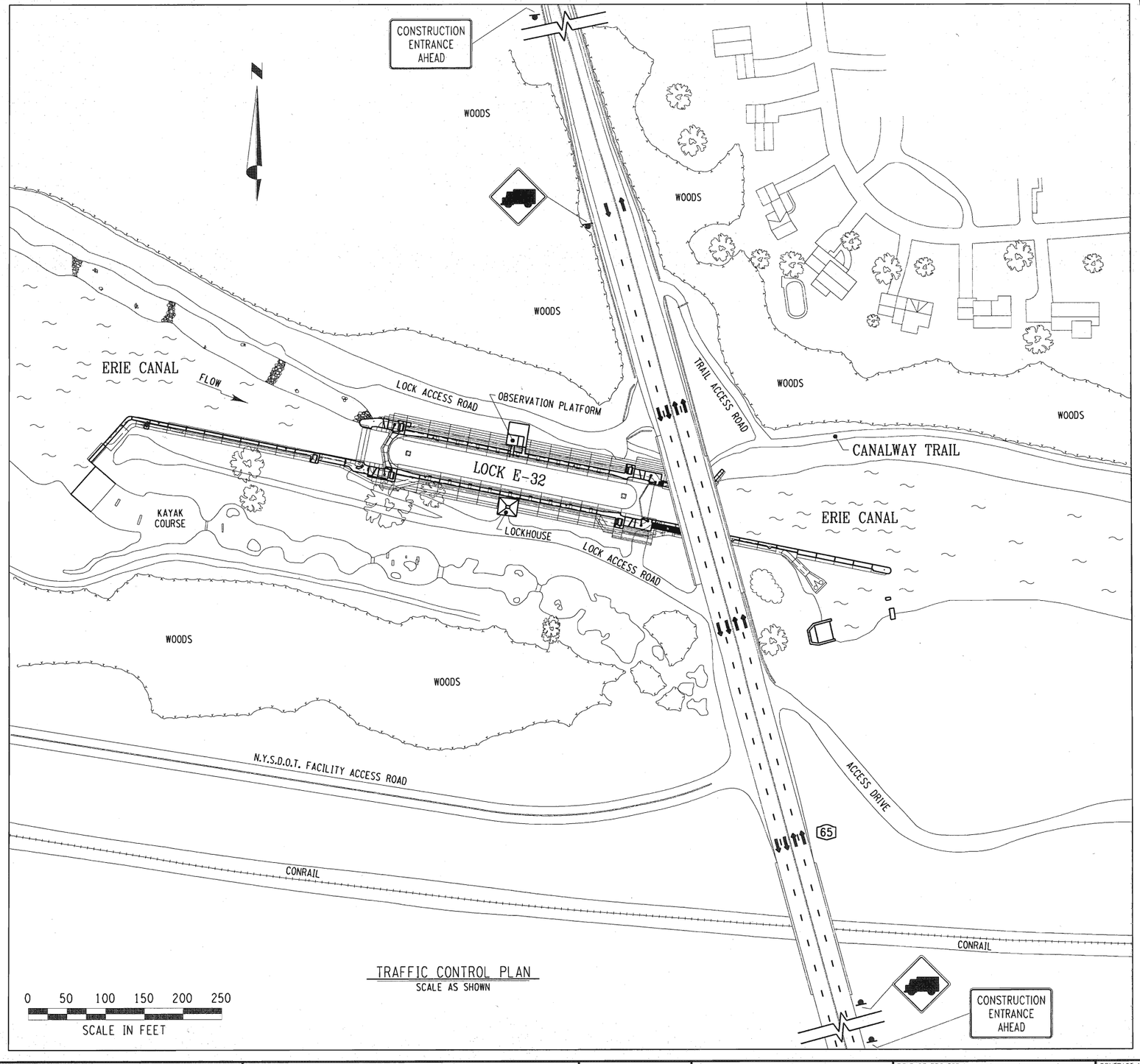

TRAFFIC CONTROL PLAN
SCALE AS SHOWN

ALTERED ON:	AFFIXED ON: 6-21-16
SIGNATURE: STAMP:	SIGNATURE: STAMP: STATE OF NEW YORK F. DAVID HUDDA 061048 LICENSED PROFESSIONAL ENGINEER

IT IS A VIOLATION OF LAW FOR ANY PERSON, UNLESS THEY ARE ACTING UNDER THE DIRECTION OF A LICENSED PROFESSIONAL ENGINEER, ARCHITECT, LANDSCAPE ARCHITECT, OR LAND SURVEYOR, TO ALTER AN ITEM IN ANY WAY. IF AN ITEM BEARING THE STAMP OF A LICENSED PROFESSIONAL IS ALTERED, THE ALTERING ENGINEER, ARCHITECT, LANDSCAPE ARCHITECT, OR LAND SURVEYOR SHALL STAMP THE DOCUMENT AND INCLUDE THE NOTATION "ALTERED BY" FOLLOWED BY THEIR SIGNATURE. THE DATE OF SUCH ALTERATION, AND A SPECIFIC DESCRIPTION OF THE ALTERATION.

REVISIONS

DATE	DESCRIPTION	BY	SYM.

NEW YORK STATE THRUWAY AUTHORITY
DEPARTMENT OF ENGINEERING
200 SOUTHERN BLVD., ALBANY, N.Y. 12209

TITLE OF PROJECT: LOCK E-32 BYPASS CULVERT REPAIR
LOCATION OF PROJECT: TOWN OF PITTFORD MONROE COUNTY
TITLE OF DRAWING: WORK ZONE TRAFFIC CONTROL

CONTRACT NUMBER: TAB 16-26C
DATE: 6/17/16
DRAWING NUMBER: MPT-1

DESIGN SUPERVISOR: R. KARIS
DESIGNED BY: J.S. LeBLANC
DRAFTED BY: J.S. LeBLANC
CHECKED BY: D. HUDDA
CHECKED BY: D. HUDDA
2016\284058\Design\Plans\WORK ZONE TRAFFIC CONTROL PLAN 20.dgn

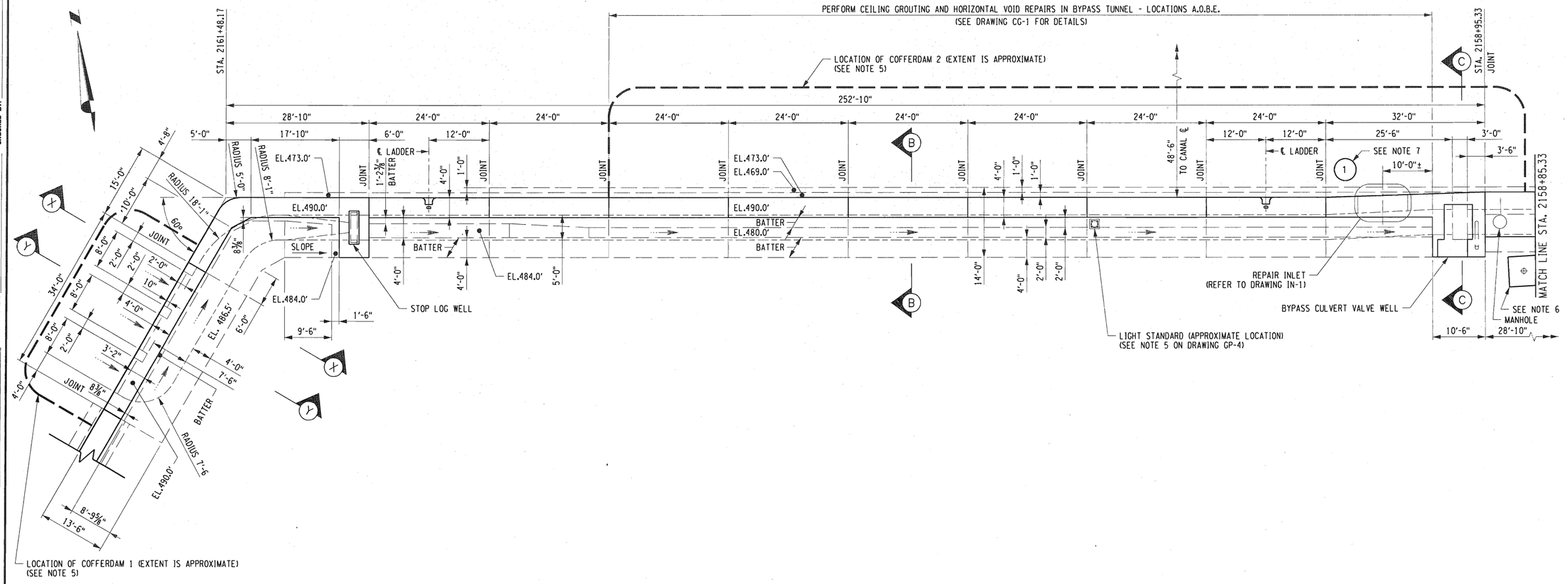

GENERAL PLAN
UPPER GUIDEWALL/BYPASS CULVERT INLET
SCALE: 1" = 10'-0"

NOTES:

1. THIS DRAWING WAS CREATED USING RECORD PLANS. EXISTING CONDITIONS AND LOCATION OF EXISTING STRUCTURES SHALL BE DETERMINED BY SURVEY AND FIELD INSPECTION.
2. REFER TO DRAWINGS ED-3 AND ED-4 FOR SECTION C-C AND OTHER DETAILS.
3. REFER TO DRAWINGS CR-11, CR-12, CP-5, CP-6, AND CP-17 FOR CULVERT INLET CONCRETE RESURFACING DETAILS.
4. REFER TO DRAWING CG-1 FOR SECTION B-B AND RELATED DETAILS.
5. REFER TO COFFERDAM AND DEWATERING NOTES ON DRAWING GN-2.
6. REMOVE SNUBBING POST AND CONCRETE BASE PAD UNDER ITEM 580.01. SNUBBING POST SHALL BE TURNED OVER TO THE CANAL CORPORATION.
7. APPROXIMATE LOCATION OF SAMPLE 1. PERFORM ALL WORK RELATED TO SAMPLING IN ACCORDANCE WITH THE SPECIAL SPECIFICATION FOR ITEM 202.9225XX12 - SAMPLING AND ANALYSIS. COST FOR SAMPLE 1 SHALL BE PAID FOR UNDER ITEM 202.92250112.
8. SEE DRAWING EX-1 FOR DETAILS OF EXCAVATION FOR BYPASS CULVERT VALVE WELL REPLACEMENT.

LEGEND

- TOP OF WALL/WALKWAY
- SUBSTRUCTURE
- FILL AND BYPASS CULVERTS
- BYPASS CULVERT FLOW
- SNUBBING POST
- LIGHT STANDARD (APPROXIMATE LOCATION)

ALTERED ON:	AFFIXED ON: 6-21-16
SIGNATURE: STAMP:	SIGNATURE: STAMP: STATE OF NEW YORK · F. DAVID HUDDA · 061048 · LICENSED PROFESSIONAL ENGINEER

IT IS A VIOLATION OF LAW FOR ANY PERSON, UNLESS THEY ARE ACTING UNDER THE DIRECTION OF A LICENSED PROFESSIONAL ENGINEER, ARCHITECT, LANDSCAPE ARCHITECT, OR LAND SURVEYOR, TO ALTER AN ITEM IN ANY WAY. IF AN ITEM BEARING THE STAMP OF A LICENSED PROFESSIONAL IS ALTERED, THE ALTERING ENGINEER, ARCHITECT, LANDSCAPE ARCHITECT, OR LAND SURVEYOR SHALL STAMP THE DOCUMENT AND INCLUDE THE NOTATION "ALTERED BY" FOLLOWED BY THEIR SIGNATURE, THE DATE OF SUCH ALTERATION, AND A SPECIFIC DESCRIPTION OF THE ALTERATION.

REVISIONS

DATE	DESCRIPTION	BY	SYM.

NEW YORK STATE THRUWAY AUTHORITY
DEPARTMENT OF ENGINEERING
200 SOUTHERN BLVD., ALBANY, N.Y. 12209

TITLE OF PROJECT: LOCK E-32 BYPASS CULVERT REPAIR
LOCATION OF PROJECT: TOWN OF PITTSFORD, MONROE COUNTY
TITLE OF DRAWING: GENERAL PLAN I

CONTRACT NUMBER: TAB 16-26C
DATE: 6/10/16
DRAWING NUMBER: GP-1

DESIGN SUPERVISOR: R. KARIS
DESIGNED BY: J.S. LeBLANC
DRAFTED BY: J.S. LeBLANC
CHECKED BY: D. HUDDA
CHECKED BY: D. HUDDA
2016\B94058\Design\Plans\GENERAL PLAN.dgn

DESIGN SUPERVISOR: R. KARIS
DESIGNED BY: J.S. LeBLANC
DRAFTED BY: J.S. LeBLANC
CHECKED BY: D. HUDDA
2016\394058\Design\Plans\GENERAL PLAN.dgn

NORTH LOCK WALL NOT IN REPAIR CONTRACT

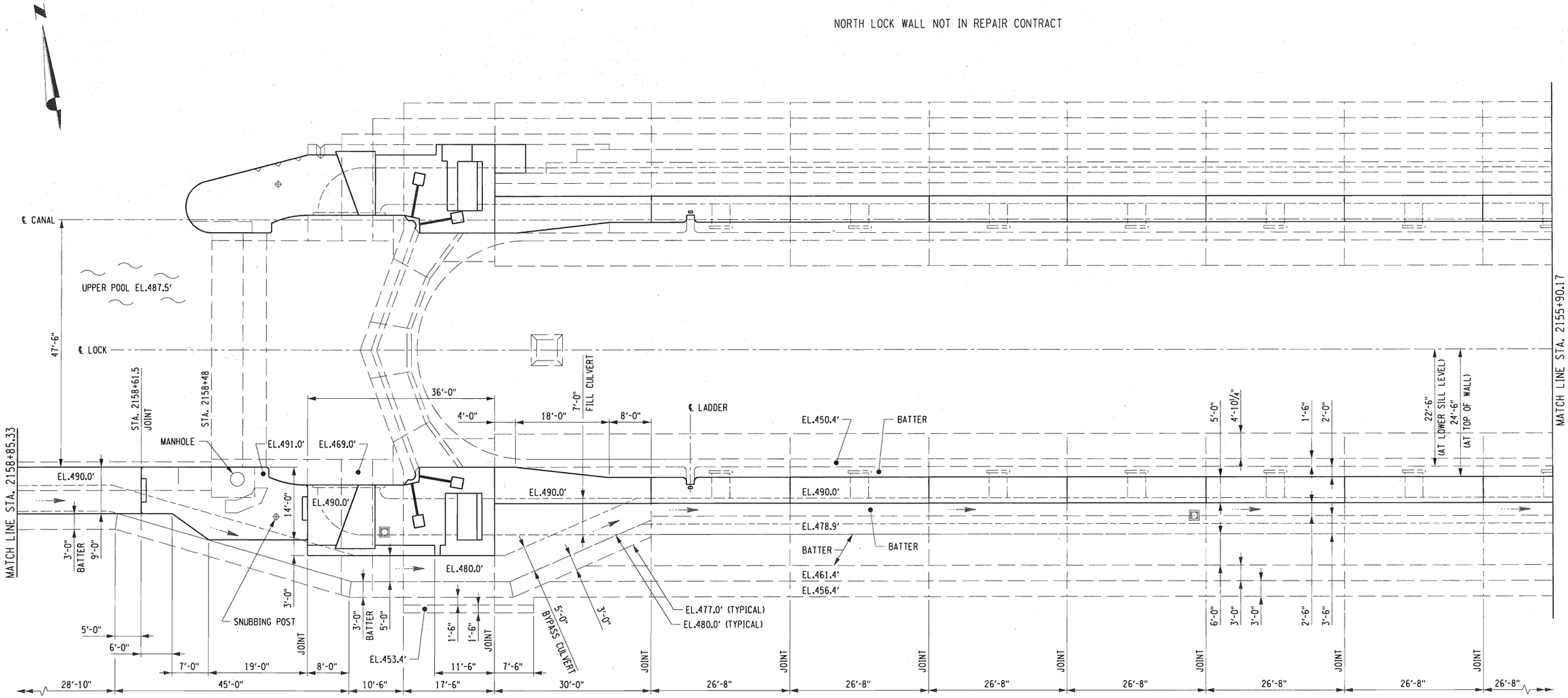

GENERAL PLAN
UPPER GUIDEWALL & LOCK
SCALE: 1" = 10'-0"

NOTES:

1. THIS DRAWING WAS CREATED USING RECORD PLANS. EXISTING CONDITIONS AND LOCATION OF EXISTING STRUCTURES SHALL BE DETERMINED BY SURVEY AND FIELD INSPECTION.
2. JOINT REPAIR AND CONCRETE RESURFACING ARE NOT REQUIRED BETWEEN STATIONS 2153+93 AND 2158+85.33.
3. SEE NOTE 5 ON DRAWING GP-4 REGARDING LIGHT STANDARDS.

LEGEND

- TOP OF WALL/WALKWAY
- SUBSTRUCTURE
- FILL AND BYPASS CULVERTS
- BYPASS CULVERT FLOW
- SNUBBING POST
- LIGHT STANDARD (APPROXIMATE LOCATION)

ALTERED ON:	AFFIXED ON: 6-21-16
SIGNATURE: STAMP:	SIGNATURE: STAMP: STATE OF NEW YORK · F. DAVID HUDDA · 061048 · LICENSED PROFESSIONAL ENGINEER

IT IS A VIOLATION OF LAW FOR ANY PERSON, UNLESS THEY ARE ACTING UNDER THE DIRECTION OF A LICENSED PROFESSIONAL ENGINEER, ARCHITECT, LANDSCAPE ARCHITECT, OR LAND SURVEYOR, TO ALTER AN ITEM IN ANY WAY. IF AN ITEM BEARING THE STAMP OF A LICENSED PROFESSIONAL IS ALTERED, THE ALTERING ENGINEER, ARCHITECT, LANDSCAPE ARCHITECT, OR LAND SURVEYOR SHALL STAMP THE DOCUMENT AND INCLUDE THE NOTATION "ALTERED BY" FOLLOWED BY THEIR SIGNATURE. THE DATE OF SUCH ALTERATION, AND A SPECIFIC DESCRIPTION OF THE ALTERATION.

REVISIONS

DATE	DESCRIPTION	BY	SYM.

NEW YORK STATE THRUWAY AUTHORITY
DEPARTMENT OF ENGINEERING
200 SOUTHERN BLVD., ALBANY, N.Y. 12209

TITLE OF PROJECT	LOCK E-32 BYPASS CULVERT REPAIR
LOCATION OF PROJECT	TOWN OF PITTSFORD MONROE COUNTY
TITLE OF DRAWING	GENERAL PLAN II
CONTRACT NUMBER:	TAB 16-26C
DATE:	6/17/16
DRAWING NUMBER:	GP-2

NORTH LOCK WALL NOT IN REPAIR CONTRACT

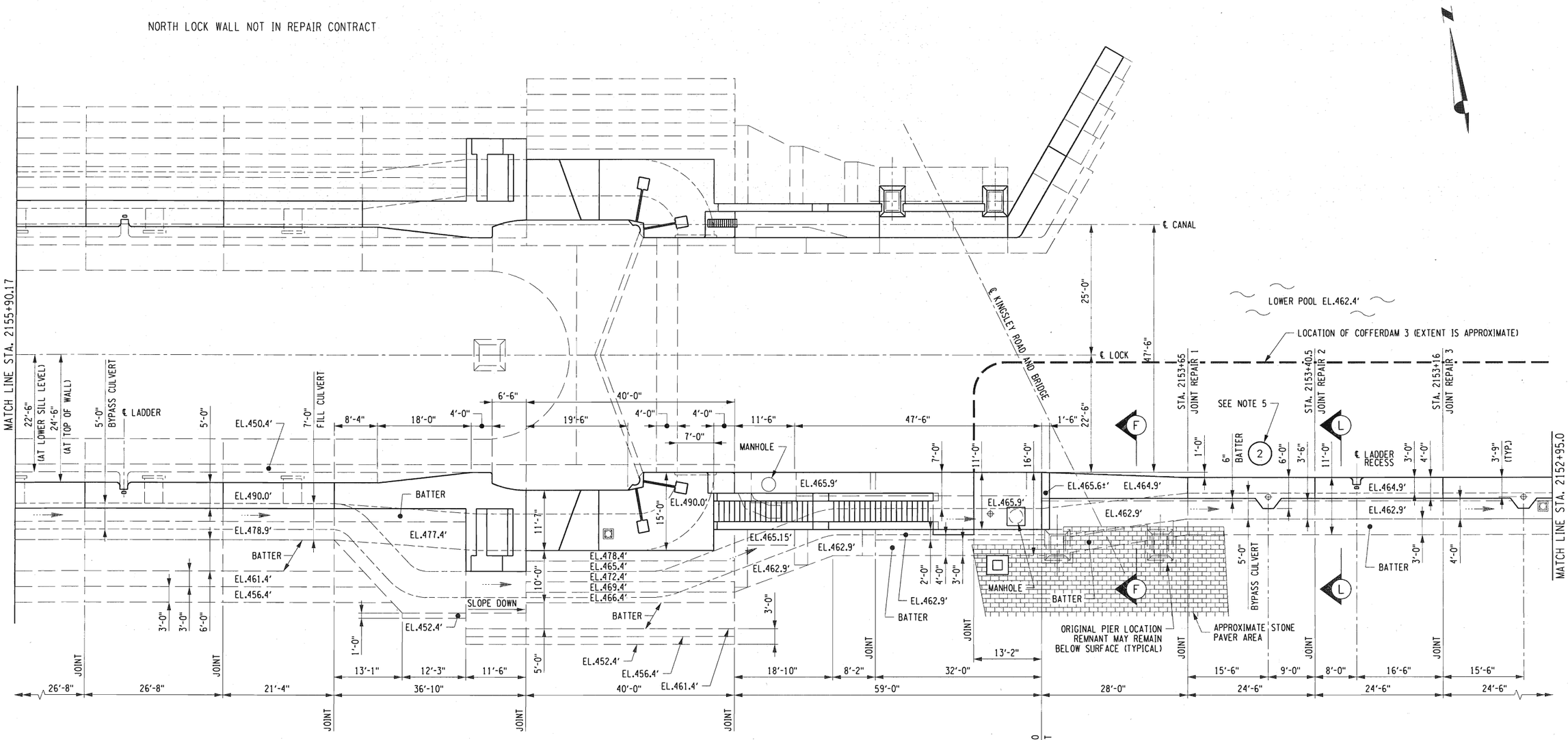

NOTES:

1. THIS DRAWING WAS CREATED USING RECORD PLANS. EXISTING CONDITIONS AND LOCATION OF EXISTING STRUCTURES SHALL BE DETERMINED BY SURVEY AND FIELD INSPECTION.
2. REFER TO DRAWINGS ED-5 AND ED-6 FOR SECTIONS AND OTHER DETAILS.
3. REFER TO DRAWINGS CR-1 THRU CR-6, AND CP-1 THRU CP-7 FOR JOINT REPAIRS AND CONCRETE RESURFACING DETAILS.
4. SEE NOTE 5 ON DRAWING GP-4 REGARDING LIGHT STANDARDS.
5. APPROXIMATE LOCATION OF SAMPLE 2. PERFORM ALL WORK RELATED TO SAMPLING IN ACCORDANCE WITH THE SPECIAL SPECIFICATION FOR ITEM 202.9225XX12 - SAMPLING AND ANALYSIS. COST FOR SAMPLE 2 SHALL BE PAID FOR UNDER ITEM 202.92250212.

GENERAL PLAN
LOCK & LOWER GUIDEWALL
SCALE: 1" = 10'-0"

LEGEND

- TOP OF WALL/WALKWAY
- SUBSTRUCTURE
- FILL AND BYPASS CULVERTS
- BYPASS CULVERT FLOW
- SNUBBING POST
- LIGHT STANDARD (APPROXIMATE LOCATION)

DRAFTED BY: J.S. LeBLANC
DESIGNED BY: J.S. LeBLANC
CHECKED BY: D. HUDDA
DESIGN SUPERVISOR: R. KARIS

2016\284058\Design\Plans\GENERAL PLAN.dgn
D. HUDDA

ALTERED ON:	AFFIXED ON: 6-21-16
SIGNATURE: STAMP:	SIGNATURE: STAMP: STATE OF NEW YORK F. DAVID HUDDA 061048 LICENSED PROFESSIONAL ENGINEER

IT IS A VIOLATION OF LAW FOR ANY PERSON, UNLESS THEY ARE ACTING UNDER THE DIRECTION OF A LICENSED PROFESSIONAL ENGINEER, ARCHITECT, LANDSCAPE ARCHITECT, OR LAND SURVEYOR, TO ALTER AN ITEM IN ANY WAY. IF AN ITEM BEARING THE STAMP OF A LICENSED PROFESSIONAL IS ALTERED, THE ALTERING ENGINEER, ARCHITECT, LANDSCAPE ARCHITECT, OR LAND SURVEYOR SHALL STAMP THE DOCUMENT AND INCLUDE THE NOTATION "ALTERED BY" FOLLOWED BY THEIR SIGNATURE. THE DATE OF SUCH ALTERATION, AND A SPECIFIC DESCRIPTION OF THE ALTERATION.

REVISIONS

DATE	DESCRIPTION	BY	SYM.

NEW YORK STATE THRUWAY AUTHORITY
DEPARTMENT OF ENGINEERING
200 SOUTHERN BLVD., ALBANY, N.Y. 12209

TITLE OF PROJECT: LOCK E-32 BYPASS CULVERT REPAIR
LOCATION OF PROJECT: TOWN OF PITTSFORD MONROE COUNTY
TITLE OF DRAWING: GENERAL PLAN III

CONTRACT NUMBER: TAB 16-26C
DATE: 6/17/16
DRAWING NUMBER: GP-3

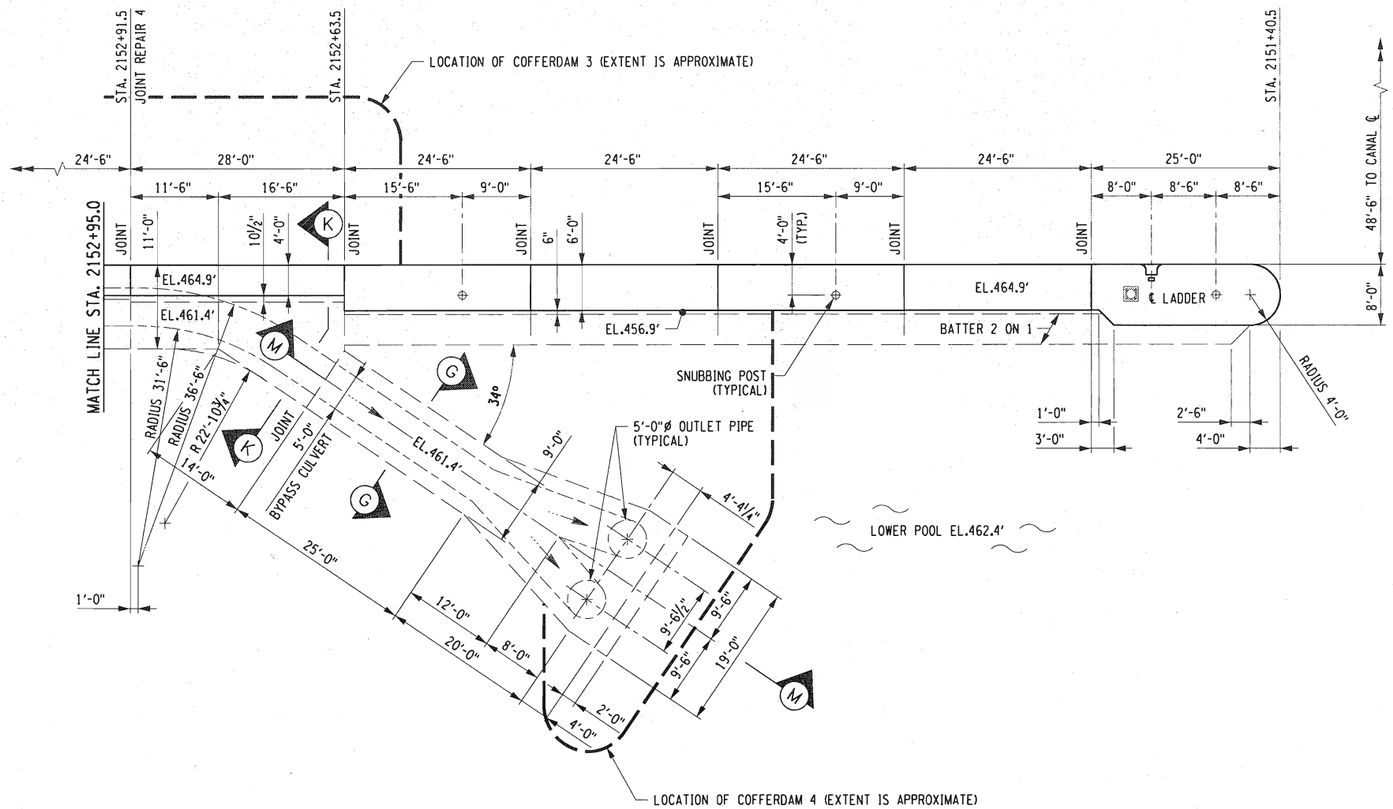

GENERAL PLAN
LOWER GUIDEWALL/BYPASS CULVERT OUTLET
SCALE: 1" = 10'-0"

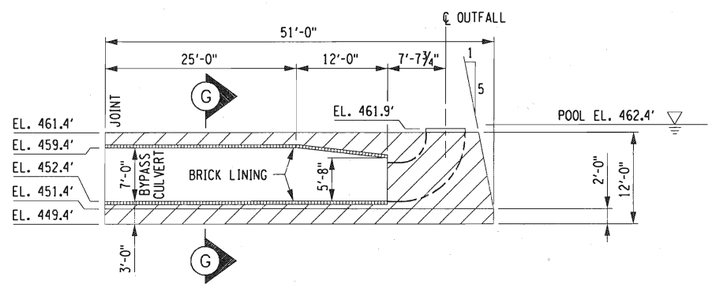

SECTION M-M
LOWER END OF BYPASS CULVERT AND OUTFALL
SCALE: 1" = 10'-0"

NOTES:

1. THIS DRAWING WAS CREATED USING RECORD PLANS. EXISTING CONDITIONS AND LOCATION OF EXISTING STRUCTURES SHALL BE DETERMINED BY SURVEY AND FIELD INSPECTION.
2. REFER TO DRAWINGS ED-5 AND ED-6 FOR SECTIONS AND OTHER DETAILS.
3. REFER TO DRAWINGS CR-3, CR-6, CP-3, CP-4, AND CP-7 FOR JOINT REPAIRS AND APPROACH WALL CONCRETE RESURFACING DETAILS.
4. REFER TO DRAWINGS CR-9, CR-10, CP-13 AND CP-14 FOR CULVERT OUTLET CONCRETE RESURFACING DETAILS.
5. LIGHT STANDARD LOCATIONS AS SHOWN ARE APPROXIMATE, AS THEY WERE NOT LOCATED BY SURVEY OR RECORD PLANS. THE SIX LIGHT STANDARDS ON THE SOUTH SIDE OF THE LOCK ARE ALL ON ONE CIRCUIT. THE LOCATION OF THE WIRING FEEDING THE LUMINAIRES IN THE AREA OF EXCAVATION IS UNKNOWN. REFER TO UTILITY NOTES ON DRAWING GN-1.

LEGEND

- TOP OF WALL/WALKWAY
- SUBSTRUCTURE
- FILL AND BYPASS CULVERTS
- BYPASS CULVERT FLOW
- SNUBBING POST
- LIGHT STANDARD (APPROXIMATE LOCATION)

ALTERED ON:	AFFIXED ON: 6-21-16
SIGNATURE: STAMP:	SIGNATURE: STAMP: STATE OF NEW YORK · F. DAVID HUDDA · 061048 · LICENSED PROFESSIONAL ENGINEER

IT IS A VIOLATION OF LAW FOR ANY PERSON, UNLESS THEY ARE ACTING UNDER THE DIRECTION OF A LICENSED PROFESSIONAL ENGINEER, ARCHITECT, LANDSCAPE ARCHITECT, OR LAND SURVEYOR, TO ALTER AN ITEM IN ANY WAY. IF AN ITEM BEARING THE STAMP OF A LICENSED PROFESSIONAL IS ALTERED, THE ALTERING ENGINEER, ARCHITECT, LANDSCAPE ARCHITECT, OR LAND SURVEYOR SHALL STAMP THE DOCUMENT AND INCLUDE THE NOTATION "ALTERED BY" FOLLOWED BY THEIR SIGNATURE. THE DATE OF SUCH ALTERATION, AND A SPECIFIC DESCRIPTION OF THE ALTERATION.

REVISIONS

DATE	DESCRIPTION	BY	SYM.

NEW YORK STATE THRUWAY AUTHORITY
DEPARTMENT OF ENGINEERING
200 SOUTHERN BLVD., ALBANY, N.Y. 12209

TITLE OF PROJECT: LOCK E-32 BYPASS CULVERT REPAIR
LOCATION OF PROJECT: TOWN OF PITTSFORD MONROE COUNTY
TITLE OF DRAWING: GENERAL PLAN IV

CONTRACT NUMBER: TAB 16-26C
DATE: 6/17/16
DRAWING NUMBER: GP-4

DESIGN SUPERVISOR: R. KARIS
DESIGNED BY: J.S. LeBLANC
CHECKED BY: D. HUDDA
DRAFTED BY: J.S. LeBLANC
CHECKED BY: D. HUDDA
2018\894058\Design\Plans\GENERAL PLAN.dgn

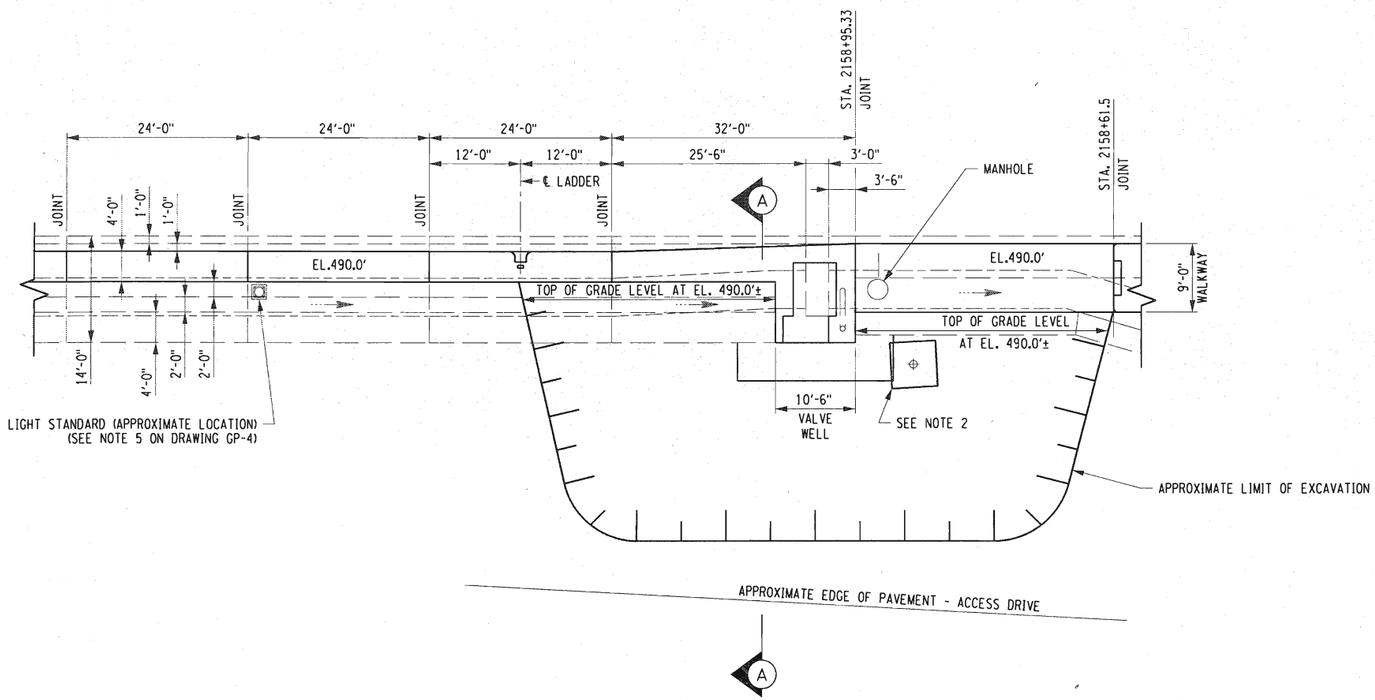

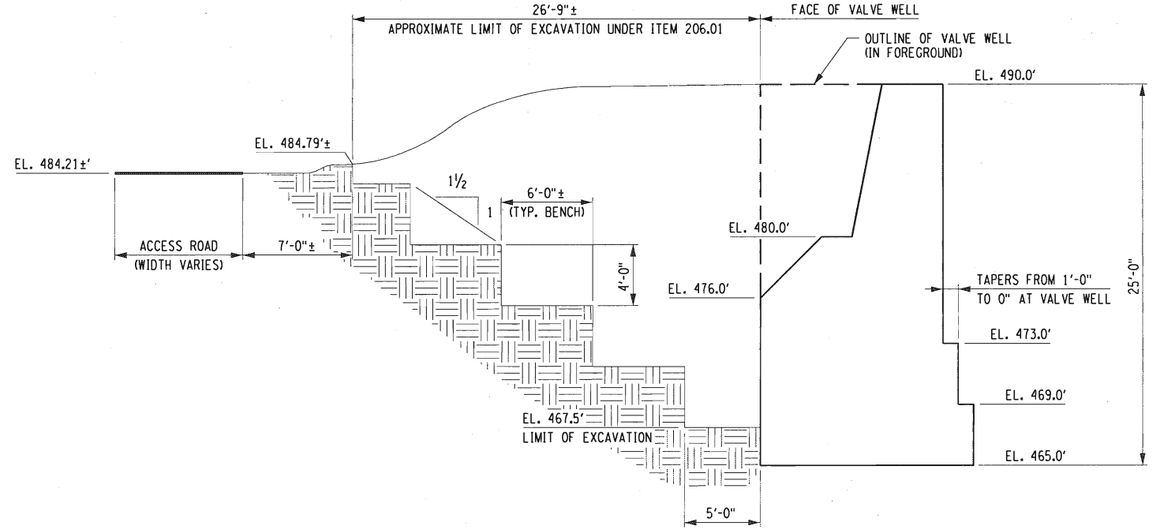

SECTION A-A
SCALE: 1" = 5'-0"

LEGEND

- TOP OF WALL/WALKWAY
- SUBSTRUCTURE
- FILL AND BYPASS CULVERTS
- BYPASS CULVERT FLOW
- SNUBBING POST
- LIGHT STANDARD (APPROXIMATE LOCATION)
- EXISTING GRADE/EMBANKMENT (TO REMAIN)

NOTES:

1. THIS DRAWING WAS CREATED USING RECORD PLANS. EXISTING CONDITIONS AND LOCATION OF EXISTING STRUCTURES SHALL BE DETERMINED BY SURVEY AND FIELD INSPECTION.
2. REMOVE SNUBBING POST UNDER ITEM 665.45240012 AND CONCRETE BASE PAD UNDER ITEM 580.01. SNUBBING POST SHALL BE TURNED OVER TO THE CANAL CORPORATION.
3. SECTION A-A ILLUSTRATES A PROPOSED METHOD FOR, AND LIMITS OF THE EXCAVATION. BENCH AS NECESSARY USING A MAXIMUM SLOPE OF 1 TO 1½, AND A MAXIMUM BENCH DEPTH OF 4 FEET. THE CONTRACTOR IS RESPONSIBLE FOR DETERMINING SAFE OPERATING SLOPES.

ALTERED ON:	AFFIXED ON: 6-21-16
SIGNATURE: STAMP:	SIGNATURE: STAMP: STATE OF NEW YORK · F. DAVID HUDDA · 061048 · LICENSED PROFESSIONAL ENGINEER

IT IS A VIOLATION OF LAW FOR ANY PERSON, UNLESS THEY ARE ACTING UNDER THE DIRECTION OF A LICENSED PROFESSIONAL ENGINEER, ARCHITECT, LANDSCAPE ARCHITECT, OR LAND SURVEYOR, TO ALTER AN ITEM IN ANY WAY. IF AN ITEM BEARING THE STAMP OF A LICENSED PROFESSIONAL IS ALTERED, THE ALTERING ENGINEER, ARCHITECT, LANDSCAPE ARCHITECT, OR LAND SURVEYOR SHALL STAMP THE DOCUMENT AND INCLUDE THE NOTATION "ALTERED BY" FOLLOWED BY THEIR SIGNATURE, THE DATE OF SUCH ALTERATION, AND A SPECIFIC DESCRIPTION OF THE ALTERATION.

REVISIONS

DATE	DESCRIPTION	BY	SYM.

NEW YORK STATE THRUWAY AUTHORITY
DEPARTMENT OF ENGINEERING
200 SOUTHERN BLVD., ALBANY, N.Y. 12209

TITLE OF PROJECT: LOCK E-32 BYPASS CULVERT REPAIR
LOCATION OF PROJECT: TOWN OF PITTSFORD MONROE COUNTY
TITLE OF DRAWING: EXCAVATION DETAILS I

CONTRACT NUMBER: TAB 16-26C
DATE: 6/21/16
DRAWING NUMBER: EX-1

DESIGN SUPERVISOR: R. KARIS
DESIGNED BY: J.S. LeBLANC
DRAFTED BY: J.S. LeBLANC
CHECKED BY: D. HUDDA
2016\B94058\Design\Plans\GENERAL PLAN.dgn
CHECKED BY: D. HUDDA

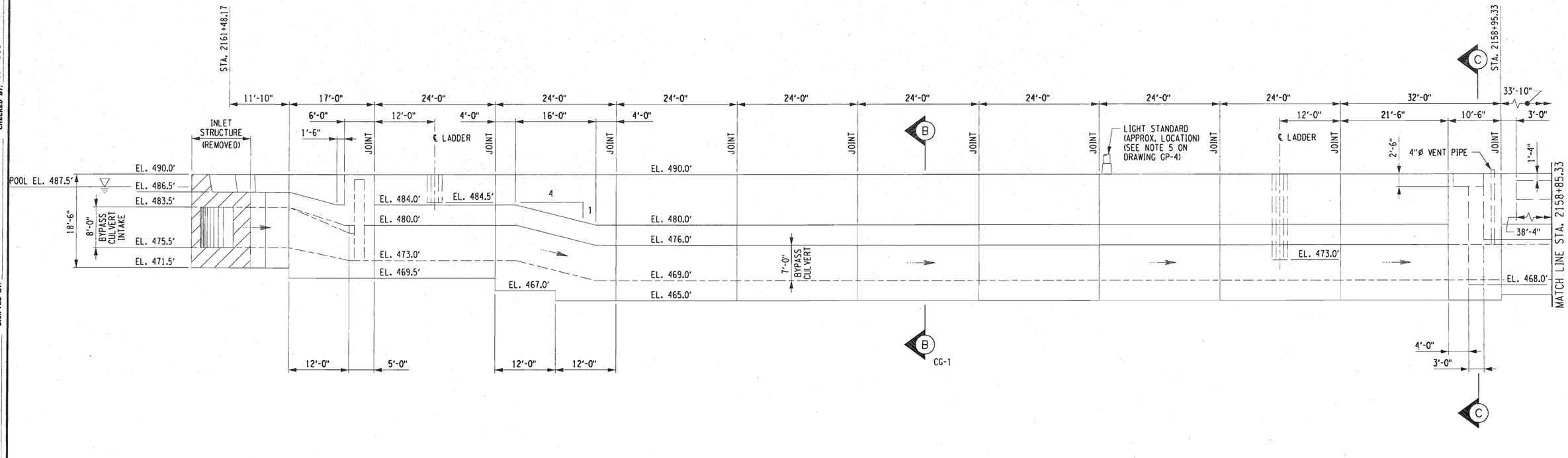

EXISTING ELEVATION
UPPER GUIDEWALL/BYPASS CULVERT INLET
SCALE: 1" = 10'-0"

NOTES:

1. THIS DRAWING WAS CREATED USING RECORD PLANS. EXISTING CONDITIONS AND LOCATION OF EXISTING STRUCTURES SHALL BE DETERMINED BY SURVEY AND FIELD INSPECTION.
2. EXISTING PILES ARE NOT SHOWN. REFER TO THE SPECIFIC DETAILS FOR AREAS INDICATED FOR REPAIR.
3. REFER TO DRAWINGS ED-3 AND ED-4 FOR SECTION C-C AND OTHER DETAILS.

ALTERED ON:	AFFIXED ON: 6-21-16
SIGNATURE: STAMP:	SIGNATURE: STAMP: STATE OF NEW YORK · F. DAVID HUDDA · 061048 · LICENSED PROFESSIONAL ENGINEER

LEGEND

- BYPASS CULVERT FLOW
- SNUBBING POST
- WATER LEVEL

IT IS A VIOLATION OF LAW FOR ANY PERSON, UNLESS THEY ARE ACTING UNDER THE DIRECTION OF A LICENSED PROFESSIONAL ENGINEER, ARCHITECT, LANDSCAPE ARCHITECT, OR LAND SURVEYOR, TO ALTER AN ITEM IN ANY WAY. IF AN ITEM BEARING THE STAMP OF A LICENSED PROFESSIONAL IS ALTERED, THE ALTERING ENGINEER, ARCHITECT, LANDSCAPE ARCHITECT, OR LAND SURVEYOR SHALL STAMP THE DOCUMENT AND INCLUDE THE NOTATION "ALTERED BY" FOLLOWED BY THEIR SIGNATURE. THE DATE OF SUCH ALTERATION, AND A SPECIFIC DESCRIPTION OF THE ALTERATION.

REVISIONS

DATE	DESCRIPTION	BY	SYM.

NEW YORK STATE THRUWAY AUTHORITY
DEPARTMENT OF ENGINEERING
200 SOUTHERN BLVD., ALBANY, N.Y. 12209

TITLE OF PROJECT: LOCK E-32 BYPASS CULVERT REPAIR
LOCATION OF PROJECT: TOWN OF PITTSFORD MONROE COUNTY
TITLE OF DRAWING: EXISTING ELEVATION I

CONTRACT NUMBER: TAB 16-26C
DATE: 6/10/16
DRAWING NUMBER: EE-1

DESIGN SUPERVISOR: R. KARIS
DESIGNED BY: J.S. LeBLANC
CHECKED BY: D. HUDDA
DRAFTED BY: J.S. LeBLANC
CHECKED BY: D. HUDDA
2016\B94058\Design\Plans\GENERAL PLAN.dgn

2016\B94058\Design\Plans\GENERAL PLAN.dgn
DRAFTED BY: J.S. LeBLANC
CHECKED BY: D. HUDDA
DESIGNED BY: J.S. LeBLANC
CHECKED BY: D. HUDDA
DESIGN SUPERVISOR: R. KARIS

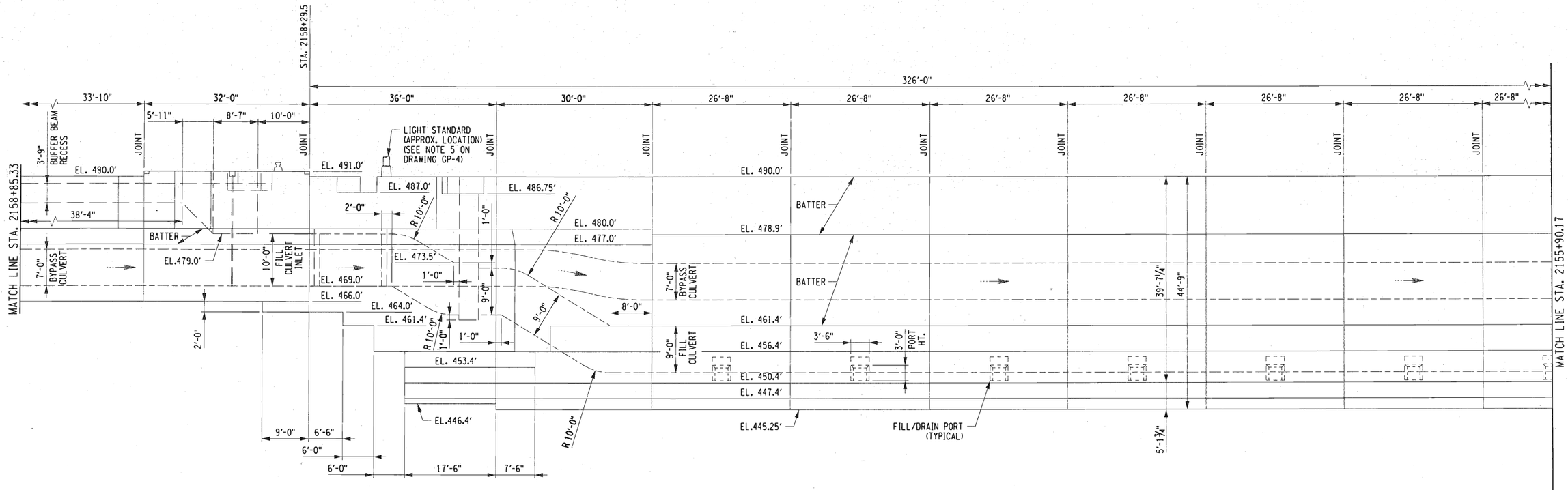

NOTES:

1. THIS DRAWING WAS CREATED USING RECORD PLANS. EXISTING CONDITIONS AND LOCATION OF EXISTING STRUCTURES SHALL BE DETERMINED BY SURVEY AND FIELD INSPECTION.
2. EXISTING PILES ARE NOT SHOWN. REFER TO THE SPECIFIC DETAILS FOR AREAS INDICATED FOR REPAIR.

EXISTING ELEVATION
UPPER GUIDEWALL & LOCK
SCALE: 1" = 10'-0"

LEGEND	
····→	BYPASS CULVERT FLOW
	SNUBBING POST
	WATER LEVEL

ALTERED ON:	AFFIXED ON: 6-21-16
SIGNATURE: STAMP:	SIGNATURE: STAMP: STATE OF NEW YORK · F. DAVID HUDDA · 061048 · LICENSED PROFESSIONAL ENGINEER

IT IS A VIOLATION OF LAW FOR ANY PERSON, UNLESS THEY ARE ACTING UNDER THE DIRECTION OF A LICENSED PROFESSIONAL ENGINEER, ARCHITECT, LANDSCAPE ARCHITECT, OR LAND SURVEYOR, TO ALTER AN ITEM IN ANY WAY. IF AN ITEM BEARING THE STAMP OF A LICENSED PROFESSIONAL IS ALTERED, THE ALTERING ENGINEER, ARCHITECT, LANDSCAPE ARCHITECT, OR LAND SURVEYOR SHALL STAMP THE DOCUMENT AND INCLUDE THE NOTATION "ALTERED BY" FOLLOWED BY THEIR SIGNATURE. THE DATE OF SUCH ALTERATION, AND A SPECIFIC DESCRIPTION OF THE ALTERATION.

REVISIONS

DATE	DESCRIPTION	BY	SYM.

NEW YORK STATE THRUWAY AUTHORITY
DEPARTMENT OF ENGINEERING
200 SOUTHERN BLVD., ALBANY, N.Y. 12209

TITLE OF PROJECT: LOCK E-32 BYPASS CULVERT REPAIR
LOCATION OF PROJECT: TOWN OF PITTSFORD MONROE COUNTY
TITLE OF DRAWING: EXISTING ELEVATION II

CONTRACT NUMBER: TAB 16-26C
DATE: 6/10/16
DRAWING NUMBER: EE-2

2016\B94058\Design\Plans\GENERAL PLAN.dgn
DESIGNED BY: J.S. LeBLANC
DRAFTED BY: J.S. LeBLANC
CHECKED BY: D. HUDDA
DESIGN SUPERVISOR: R. KARIS
CHECKED BY: D. HUDDA

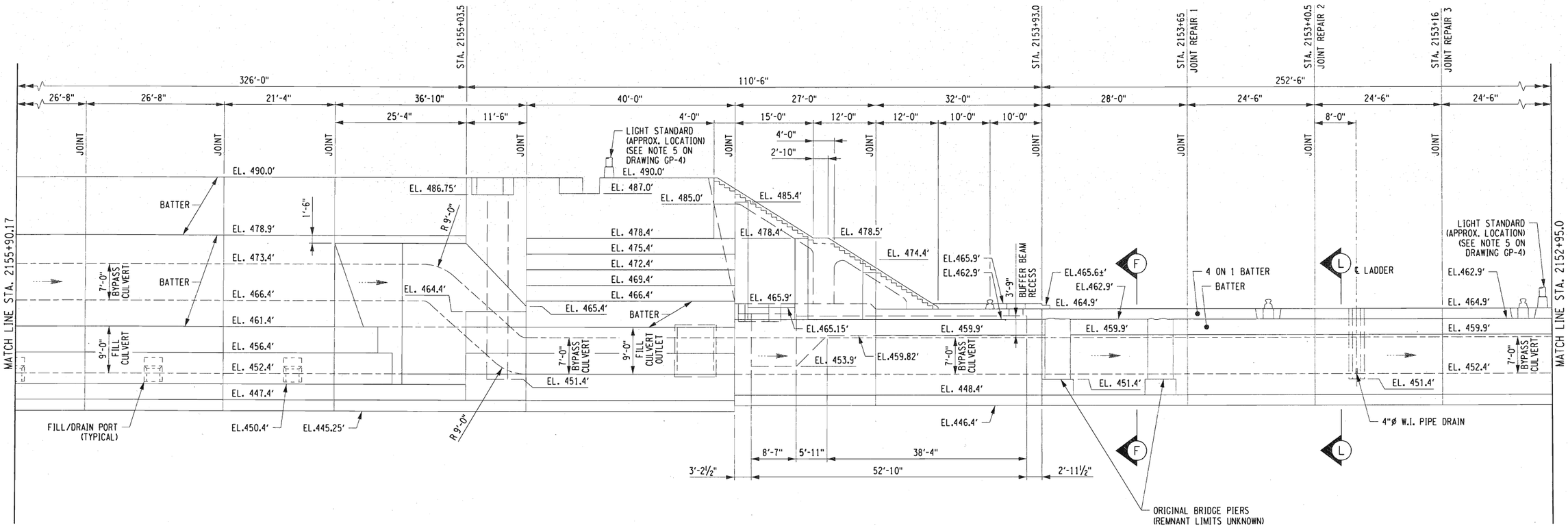

NOTES:

1. THIS DRAWING WAS CREATED USING RECORD PLANS. EXISTING CONDITIONS AND LOCATION OF EXISTING STRUCTURES SHALL BE DETERMINED BY SURVEY AND FIELD INSPECTION.
2. EXISTING PILES ARE NOT SHOWN. REFER TO THE SPECIFIC DETAILS FOR AREAS INDICATED FOR REPAIR.
3. REFER TO DRAWINGS ED-5 AND ED-6 FOR SECTIONS AND OTHER DETAILS.
4. REFER TO DRAWINGS CR-1 THRU CR-6, AND CP-1 THRU CP-7 FOR JOINT REPAIRS AND CONCRETE RESURFACING DETAILS.

EXISTING ELEVATION
LOCK & LOWER GUIDEWALL
SCALE: 1" = 10'-0"

LEGEND

- BYPASS CULVERT FLOW
- SNUBBING POST
- WATER LEVEL

ALTERED ON:	AFFIXED ON: 6-21-16
SIGNATURE: STAMP:	SIGNATURE: STAMP: STATE OF NEW YORK F. DAVID HUDDA 061048 LICENSED PROFESSIONAL ENGINEER

IT IS A VIOLATION OF LAW FOR ANY PERSON, UNLESS THEY ARE ACTING UNDER THE DIRECTION OF A LICENSED PROFESSIONAL ENGINEER, ARCHITECT, LANDSCAPE ARCHITECT, OR LAND SURVEYOR, TO ALTER AN ITEM IN ANY WAY. IF AN ITEM BEARING THE STAMP OF A LICENSED PROFESSIONAL IS ALTERED, THE ALTERING ENGINEER, ARCHITECT, LANDSCAPE ARCHITECT, OR LAND SURVEYOR SHALL STAMP THE DOCUMENT AND INCLUDE THE NOTATION "ALTERED BY" FOLLOWED BY THEIR SIGNATURE. THE DATE OF SUCH ALTERATION, AND A SPECIFIC DESCRIPTION OF THE ALTERATION.

REVISIONS

DATE	DESCRIPTION	BY	SYM.

NEW YORK STATE THRUWAY AUTHORITY
DEPARTMENT OF ENGINEERING
200 SOUTHERN BLVD., ALBANY, N.Y. 12209

TITLE OF PROJECT: LOCK E-32 BYPASS CULVERT REPAIR
LOCATION OF PROJECT: TOWN OF PITTSFORD MONROE COUNTY
TITLE OF DRAWING: EXISTING ELEVATION III

CONTRACT NUMBER: TAB 16-26C
DATE: 6/10/16
DRAWING NUMBER: EE-3

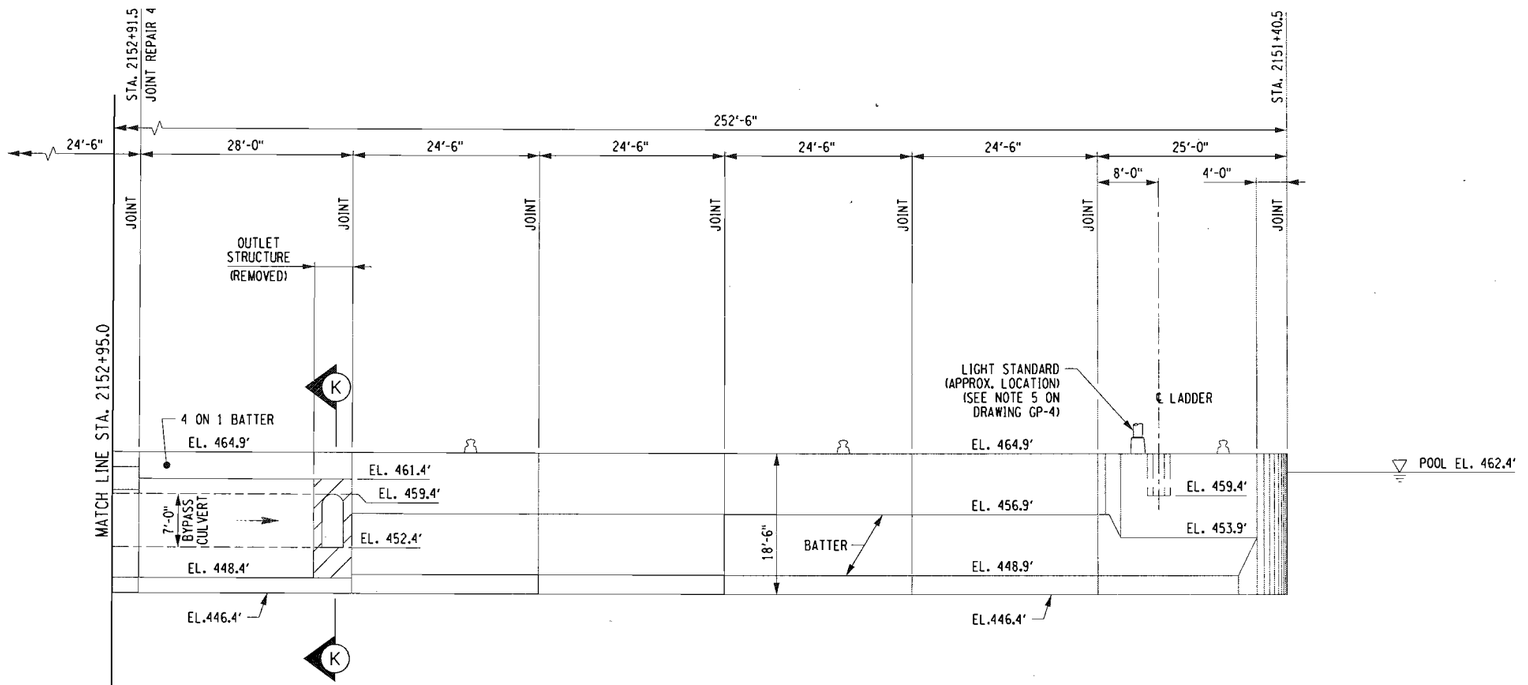

NOTES:

1. THIS DRAWING WAS CREATED USING RECORD PLANS. EXISTING CONDITIONS AND LOCATION OF EXISTING STRUCTURES SHALL BE DETERMINED BY SURVEY AND FIELD INSPECTION.
2. EXISTING PILES ARE NOT SHOWN. REFER TO THE SPECIFIC DETAILS FOR AREAS INDICATED FOR REPAIR.
3. REFER TO DRAWING ED-5 FOR SECTION K-K.
4. REFER TO DRAWINGS CR-2, CR-3, CR-6, AND CP-2 THRU CP-4, AND CP-7 FOR JOINT REPAIR DETAILS AND APPROACH WALL CONCRETE RESUFACING DETAILS.

ALTERED ON:	AFFIXED ON: 6-21-16
SIGNATURE: STAMP:	SIGNATURE: STAMP: STATE OF NEW YORK · F. DAVID HUDDA · 061048 · LICENSED PROFESSIONAL ENGINEER

LEGEND

- BYPASS CULVERT FLOW
- SNUBBING POST
- WATER LEVEL

IT IS A VIOLATION OF LAW FOR ANY PERSON, UNLESS THEY ARE ACTING UNDER THE DIRECTION OF A LICENSED PROFESSIONAL ENGINEER, ARCHITECT, LANDSCAPE ARCHITECT, OR LAND SURVEYOR, TO ALTER AN ITEM IN ANY WAY. IF AN ITEM BEARING THE STAMP OF A LICENSED PROFESSIONAL IS ALTERED, THE ALTERING ENGINEER, ARCHITECT, LANDSCAPE ARCHITECT, OR LAND SURVEYOR SHALL STAMP THE DOCUMENT AND INCLUDE THE NOTATION "ALTERED BY" FOLLOWED BY THEIR SIGNATURE. THE DATE OF SUCH ALTERATION, AND A SPECIFIC DESCRIPTION OF THE ALTERATION.

REVISIONS

DATE	DESCRIPTION	BY	SYM.

NEW YORK STATE THRUWAY AUTHORITY
DEPARTMENT OF ENGINEERING
200 SOUTHERN BLVD., ALBANY, N.Y. 12209

TITLE OF PROJECT: LOCK E-32 BYPASS CULVERT REPAIR
LOCATION OF PROJECT: TOWN OF PITTSFORD, MONROE COUNTY
TITLE OF DRAWING: EXISTING ELEVATION IV

CONTRACT NUMBER: TAB 16-26C
DATE: 6/10/16
DRAWING NUMBER: EE-4

DESIGN SUPERVISOR: R. KARIS
DESIGNED BY: J.S. LeBLANC
CHECKED BY: D. HUDDA
DRAFTED BY: J.S. LeBLANC
CHECKED BY: D. HUDDA
2016\594056\Design\Plans\GENERAL PLAN.dgn

2016/194058/Design/Plans/CAST IRON JOINT LINING.dgn
CHECKED BY: D. HUDDA
DRAFTED BY: J.S. LeBLANC
CHECKED BY: D. HUDDA
DESIGNED BY: J.S. LeBLANC
DESIGN SUPERVISOR: R. KARIS

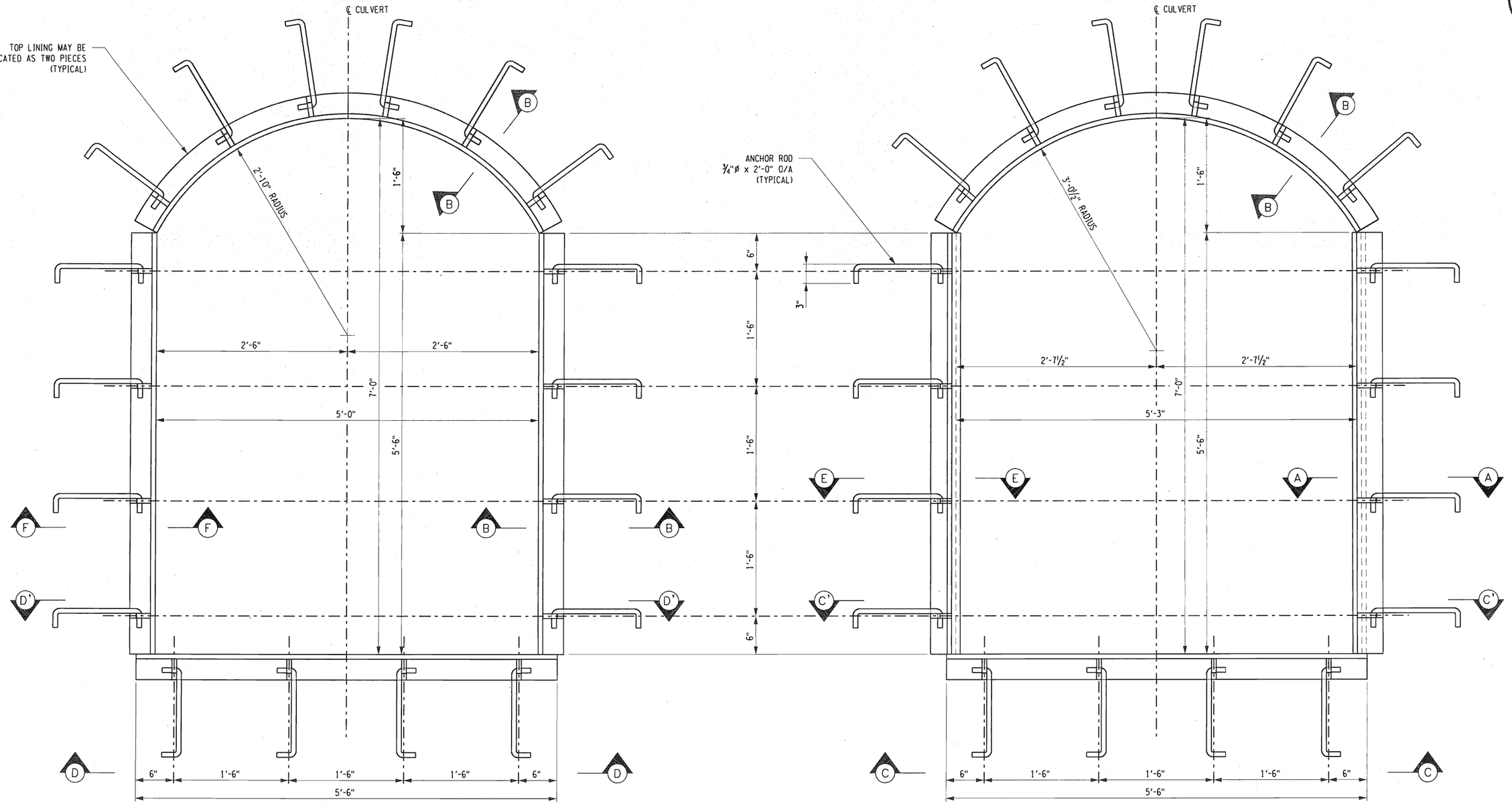

SECTION OF CAST IRON LINING AT STRAIGHT JOINTS
SCALE: 1½" = 1'-0"

SECTION OF CAST IRON LINING AT SKEWED JOINTS
SCALE: 1½" = 1'-0"

ALTERED ON:	AFFIXED ON: 6-21-16
SIGNATURE: STAMP:	SIGNATURE: STAMP: STATE OF NEW YORK · F. DAVID HUDDA · 061048 · LICENSED PROFESSIONAL ENGINEER

NOTES:

1. THESE DETAILS WERE PRODUCED USING RECORD PLANS.
2. REFER TO DRAWING ED-2 FOR SECTIONS AND OTHER DETAILS.
3. NEW FRAMES ARE NOT REQUIRED IN NEW JOINT REPAIRS. THESE DETAILS ARE PROVIDED FOR INFORMATION ONLY.
4. SEE DRAWINGS ED-3 AND CR-3 FOR LOCATION OF CAST EXISTING CAST LININGS.

IT IS A VIOLATION OF LAW FOR ANY PERSON, UNLESS THEY ARE ACTING UNDER THE DIRECTION OF A LICENSED PROFESSIONAL ENGINEER, ARCHITECT, LANDSCAPE ARCHITECT, OR LAND SURVEYOR, TO ALTER AN ITEM IN ANY WAY. IF AN ITEM BEARING THE STAMP OF A LICENSED PROFESSIONAL IS ALTERED, THE ALTERING ENGINEER, ARCHITECT, LANDSCAPE ARCHITECT, OR LAND SURVEYOR SHALL STAMP THE DOCUMENT AND INCLUDE THE NOTATION "ALTERED BY" FOLLOWED BY THEIR SIGNATURE. THE DATE OF SUCH ALTERATION, AND A SPECIFIC DESCRIPTION OF THE ALTERATION.

REVISIONS

DATE	DESCRIPTION	BY	SYM.

NEW YORK STATE THRUWAY AUTHORITY
DEPARTMENT OF ENGINEERING
200 SOUTHERN BLVD., ALBANY, N.Y. 12209

TITLE OF PROJECT: LOCK E-32 BYPASS CULVERT REPAIR
LOCATION OF PROJECT: TOWN OF PITTSFORD MONROE COUNTY
TITLE OF DRAWING: EXISTING C.I. LINING DETAILS

CONTRACT NUMBER: TAB 16-26C
DATE: 6/10/16
DRAWING NUMBER: ED-1

2016/194058/Design/Plans/CAST IRON JOINT LINING.dgn
CHECKED BY: D. HUDDA
DRAFTED BY: J.S. LeBLANC
DESIGNED BY: J.S. LeBLANC
CHECKED BY: D. HUDDA
DESIGN SUPERVISOR: R. KARIS

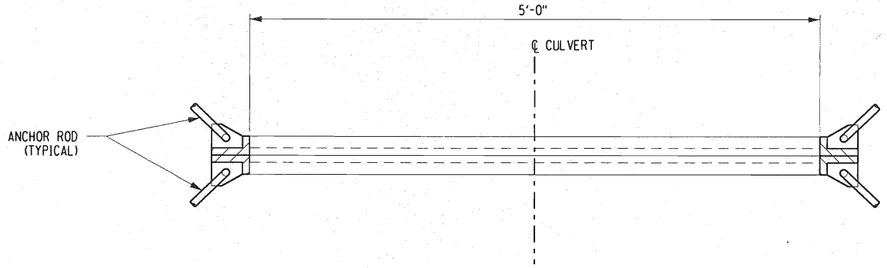

SECTION D'-D'
SCALE: 1½" = 1'-0"

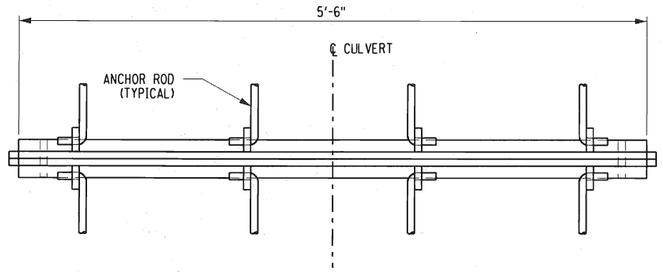

SECTION D-D
SCALE: 1½" = 1'-0"

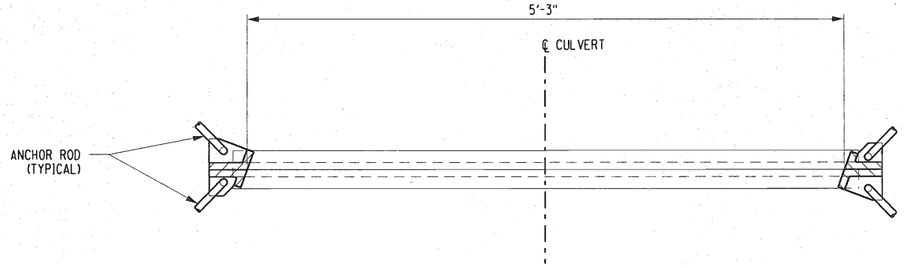

SECTION C'-C'
SCALE: 1½" = 1'-0"

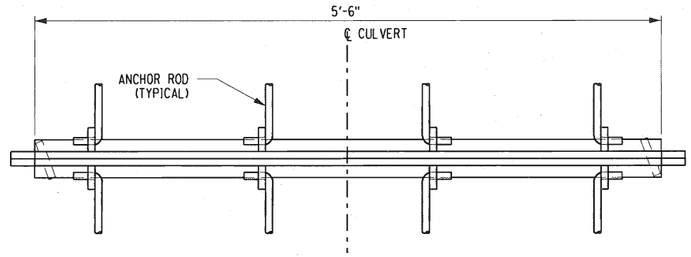

SECTION C-C
SCALE: 1½" = 1'-0"

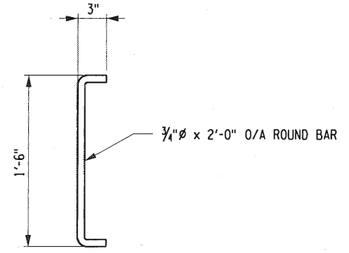

ANCHOR ROD DETAIL
SCALE: 1½" = 1'-0"

NOTES:

1. THESE DETAILS WERE PRODUCED USING RECORD PLANS.
2. REFER TO DRAWING ED-1 FOR SECTION LOCATIONS.
3. NEW FRAMES ARE NOT REQUIRED IN NEW JOINT REPAIRS. THESE DETAILS ARE PROVIDED FOR INFORMATION ONLY.

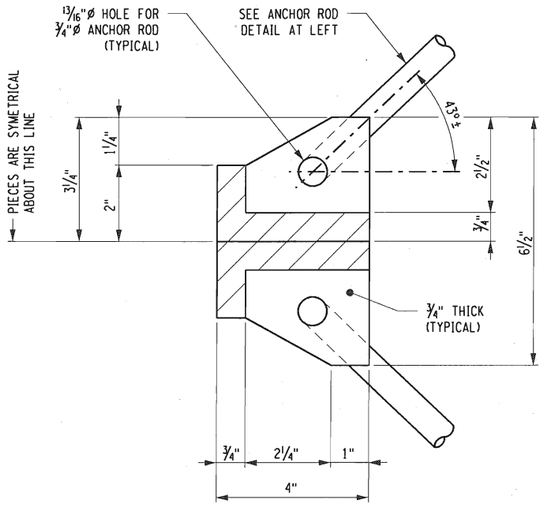

SECTION B-B (AS SHOWN)
SECTION F-F (OPPOSITE HAND)
SCALE: 3" = 1'-0"

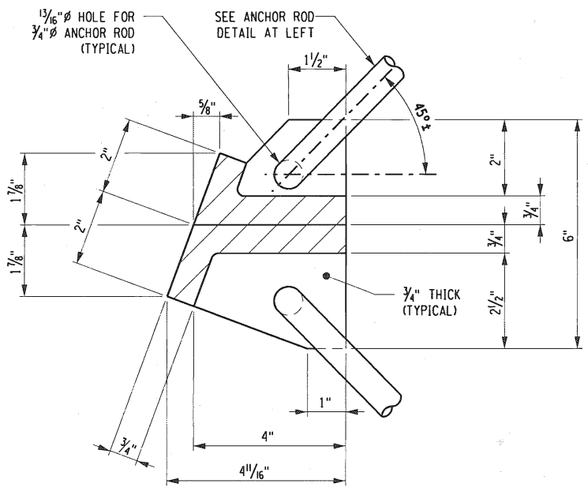

SECTION A-A (AS SHOWN)
SECTION E-E (SIMILAR)
SCALE: 3" = 1'-0"

ALTERED ON:	AFFIXED ON: 6-21-16
SIGNATURE: STAMP:	SIGNATURE: STAMP: STATE OF NEW YORK · F. DAVID HUDDA · 061048 · LICENSED PROFESSIONAL ENGINEER

IT IS A VIOLATION OF LAW FOR ANY PERSON, UNLESS THEY ARE ACTING UNDER THE DIRECTION OF A LICENSED PROFESSIONAL ENGINEER, ARCHITECT, LANDSCAPE ARCHITECT, OR LAND SURVEYOR, TO ALTER AN ITEM IN ANY WAY. IF AN ITEM BEARING THE STAMP OF A LICENSED PROFESSIONAL IS ALTERED, THE ALTERING ENGINEER, ARCHITECT, LANDSCAPE ARCHITECT, OR LAND SURVEYOR SHALL STAMP THE DOCUMENT AND INCLUDE THE NOTATION "ALTERED BY" FOLLOWED BY THEIR SIGNATURE. THE DATE OF SUCH ALTERATION, AND A SPECIFIC DESCRIPTION OF THE ALTERATION.

REVISIONS

DATE	DESCRIPTION	BY	SYM.

NEW YORK STATE THRUWAY AUTHORITY
DEPARTMENT OF ENGINEERING
200 SOUTHERN BLVD., ALBANY, N.Y. 12209

TITLE OF PROJECT: LOCK E-32 BYPASS CULVERT REPAIR
LOCATION OF PROJECT: TOWN OF PITTSFORD MONROE COUNTY
TITLE OF DRAWING: EXISTING C.I. LINING SECTIONS

CONTRACT NUMBER: TAB 16-26C
DATE: 6/10/16
DRAWING NUMBER: ED-2

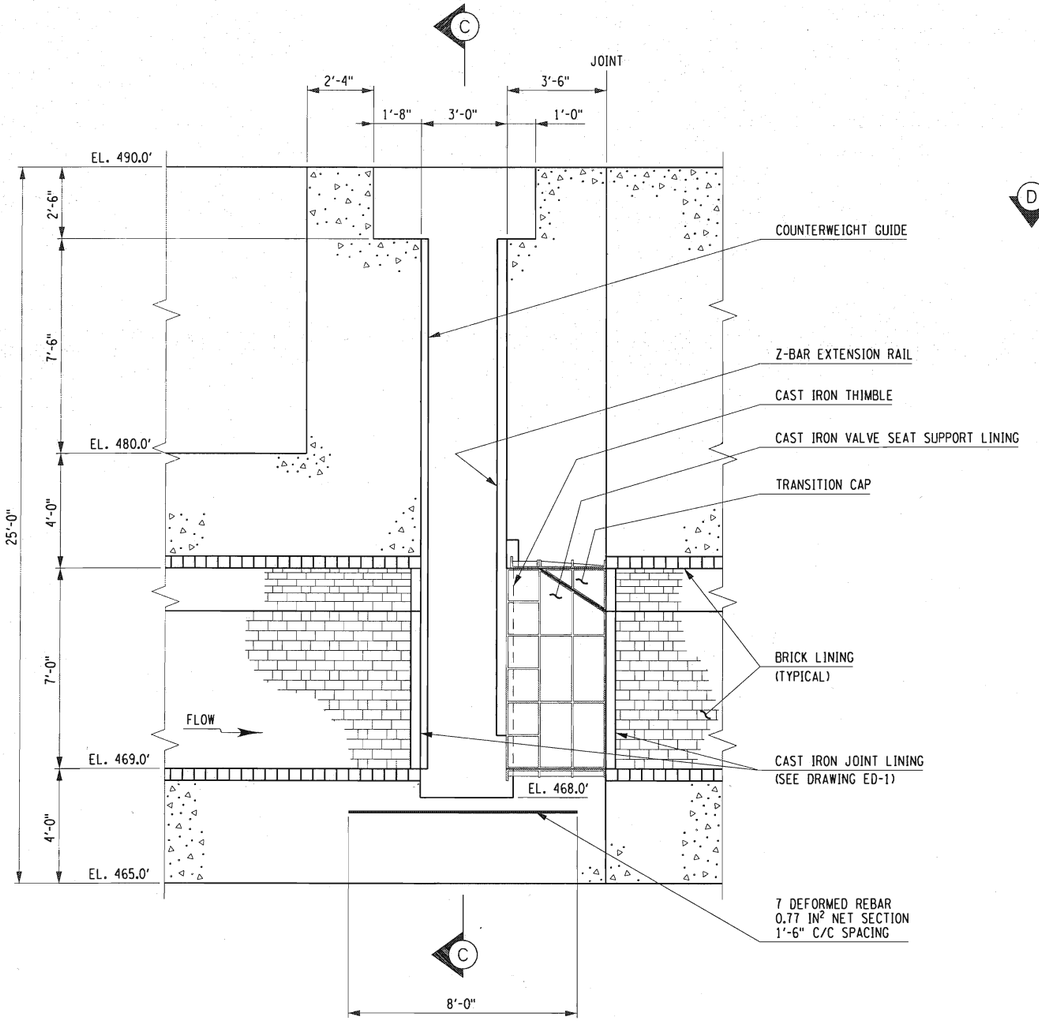

NOTE: PILES NOT SHOWN

BYPASS CULVERT VALVE WELL SECTION AT CENTERLINE OF TUNNEL

SCALE: 3/8" = 1'-0"

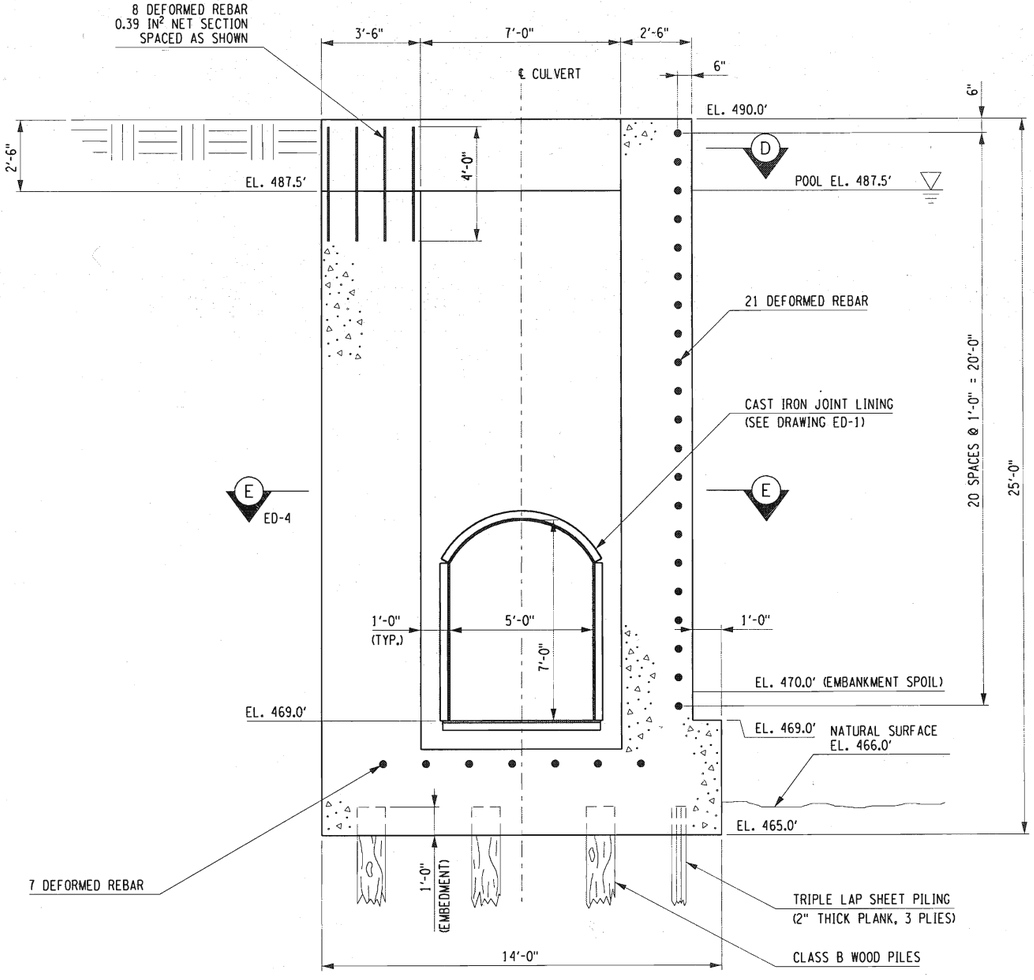

SECTION C-C

SCALE: 3/8" = 1'-0"

NOTES:

1. THESE DETAILS WERE PRODUCED USING RECORD PLANS.
2. REFER TO DRAWINGS CR-7, CR-8, AND CP-8 THROUGH CP-12 FOR DETAILS OF DEMOLITION AND RECONSTRUCTION OF THE BYPASS CULVERT VALVE WELL.

ALTERED ON:	AFFIXED ON: 6-21-16
SIGNATURE: STAMP:	SIGNATURE: STAMP: STATE OF NEW YORK · F. DAVID HUDDA · 061048 · LICENSED PROFESSIONAL ENGINEER

IT IS A VIOLATION OF LAW FOR ANY PERSON, UNLESS THEY ARE ACTING UNDER THE DIRECTION OF A LICENSED PROFESSIONAL ENGINEER, ARCHITECT, LANDSCAPE ARCHITECT, OR LAND SURVEYOR, TO ALTER AN ITEM IN ANY WAY. IF AN ITEM BEARING THE STAMP OF A LICENSED PROFESSIONAL IS ALTERED, THE ALTERING ENGINEER, ARCHITECT, LANDSCAPE ARCHITECT, OR LAND SURVEYOR SHALL STAMP THE DOCUMENT AND INCLUDE THE NOTATION "ALTERED BY" FOLLOWED BY THEIR SIGNATURE. THE DATE OF SUCH ALTERATION, AND A SPECIFIC DESCRIPTION OF THE ALTERATION.

REVISIONS

DATE	DESCRIPTION	BY	SYM.

NEW YORK STATE THRUWAY AUTHORITY
DEPARTMENT OF ENGINEERING
200 SOUTHERN BLVD., ALBANY, N.Y. 12209

TITLE OF PROJECT	LOCK E-32 BYPASS CULVERT REPAIR
LOCATION OF PROJECT	TOWN OF PITTSFORD MONROE COUNTY
TITLE OF DRAWING	EXISTING BYPASS VALVE I
CONTRACT NUMBER:	TAB 16-26C
DATE:	6/17/16
DRAWING NUMBER:	ED-3

DESIGN SUPERVISOR: R. KARIS
DESIGNED BY: J.S. LeBLANC
DRAFTED BY: J.S. LeBLANC
CHECKED BY: D. HUDDA
CHECKED BY: D. HUDDA

2016\394058\Design\Plans\EXISTING BYPASS VALVE.dgn

2018\094058\Design\Plans\EXISTING BYPASS VALVE.dgn
CHECKED BY: D. HUDDA
DRAFTED BY: J.S. LeBLANC
DESIGNED BY: J.S. LeBLANC
CHECKED BY: D. HUDDA
DESIGN SUPERVISOR: R. KARIS

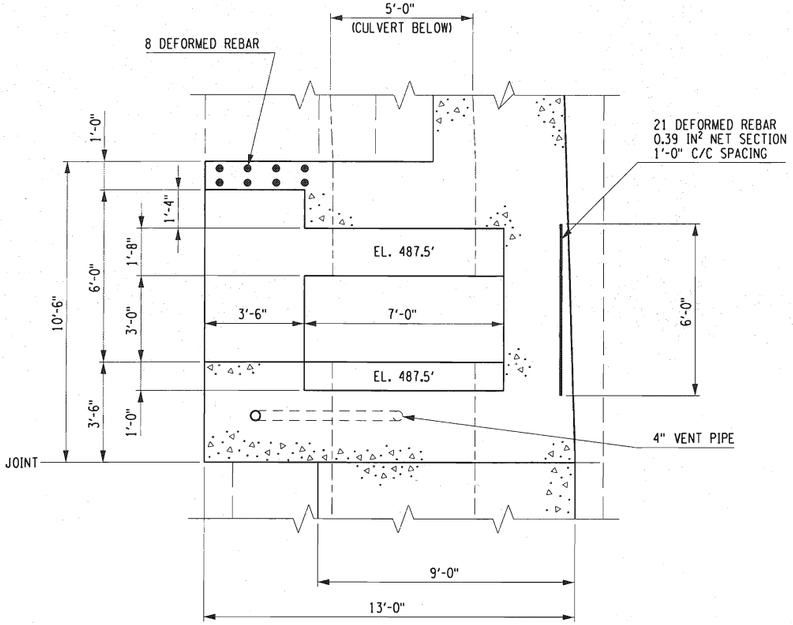

SECTION D-D
SCALE: 3/8" = 1'-0"

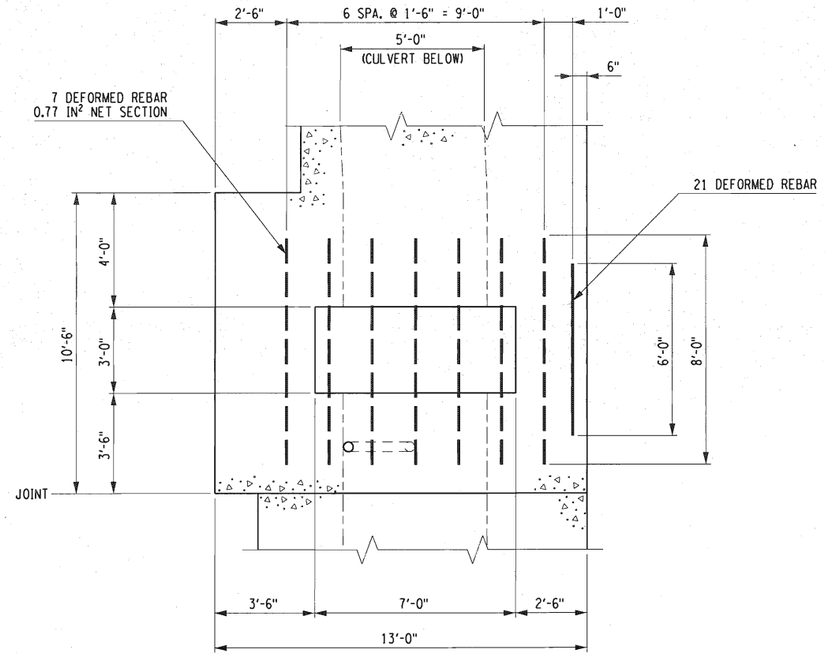

SECTION E-E
SCALE: 3/8" = 1'-0"

NOTES:

1. THESE DETAILS WERE PRODUCED USING RECORD PLANS.
2. REFER TO DRAWING ED-3 FOR SECTION LOCATIONS.

ALTERED ON:	AFFIXED ON: 6-21-16
SIGNATURE: STAMP:	SIGNATURE: STAMP: STATE OF NEW YORK · F. DAVID HUDDA · 061048 · LICENSED PROFESSIONAL ENGINEER

IT IS A VIOLATION OF LAW FOR ANY PERSON, UNLESS THEY ARE ACTING UNDER THE DIRECTION OF A LICENSED PROFESSIONAL ENGINEER, ARCHITECT, LANDSCAPE ARCHITECT, OR LAND SURVEYOR, TO ALTER AN ITEM IN ANY WAY. IF AN ITEM BEARING THE STAMP OF A LICENSED PROFESSIONAL IS ALTERED, THE ALTERING ENGINEER, ARCHITECT, LANDSCAPE ARCHITECT, OR LAND SURVEYOR SHALL STAMP THE DOCUMENT AND INCLUDE THE NOTATION "ALTERED BY" FOLLOWED BY THEIR SIGNATURE. THE DATE OF SUCH ALTERATION, AND A SPECIFIC DESCRIPTION OF THE ALTERATION.

REVISIONS

DATE	DESCRIPTION	BY	SYM.

NEW YORK STATE THRUWAY AUTHORITY
DEPARTMENT OF ENGINEERING
200 SOUTHERN BLVD., ALBANY, N.Y. 12209

TITLE OF PROJECT: LOCK E-32 BYPASS CULVERT REPAIR
LOCATION OF PROJECT: TOWN OF PITTSFORD MONROE COUNTY
TITLE OF DRAWING: EXISTING BYPASS VALVE II

CONTRACT NUMBER: TAB 16-26C
DATE: 6/17/16
DRAWING NUMBER: ED-4

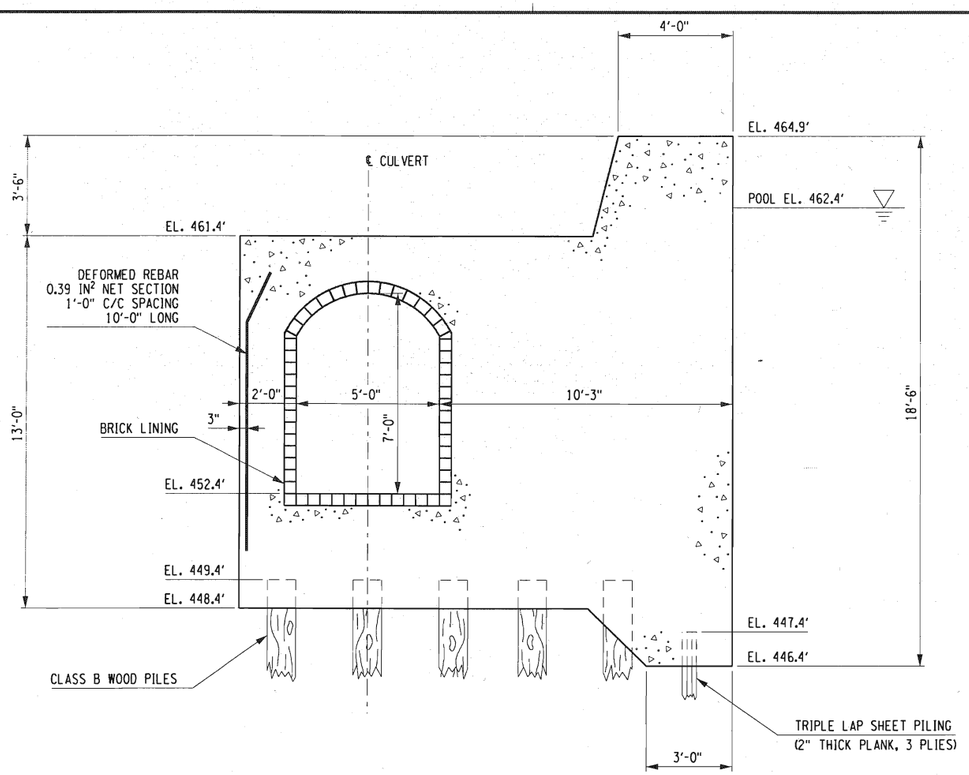

SECTION K-K
SCALE: ⅜" = 1'-0"

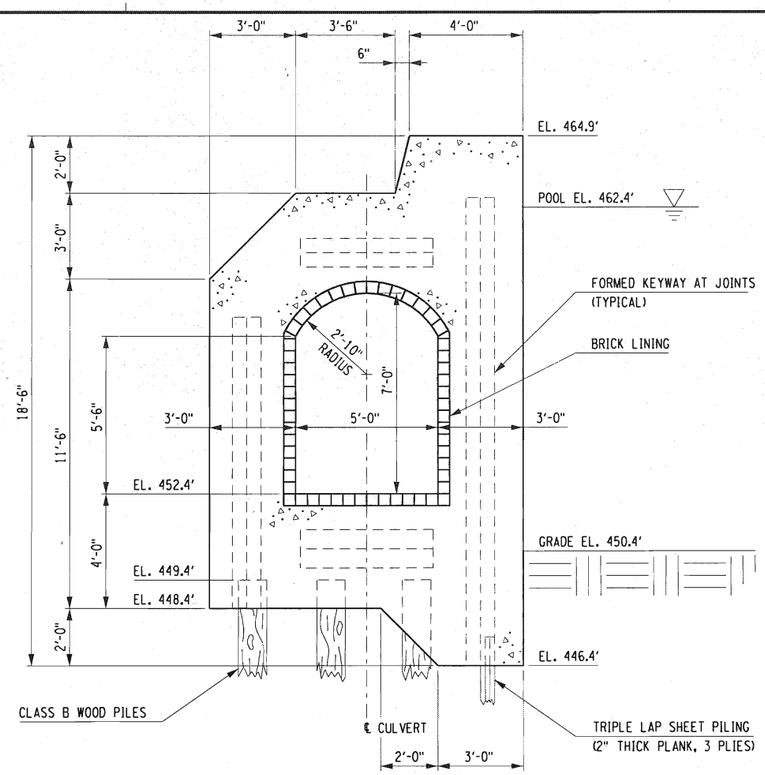

SECTION L-L
SCALE: ⅜" = 1'-0"

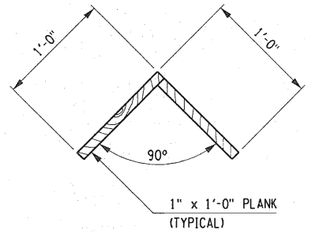

SOLID WALLS

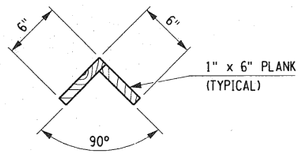

THIN WALLS

KEYWAY FORM DETAILS
SCALE: 1½" = 1'-0"

NOTES:

1. THIS DRAWING WAS CREATED USING RECORD PLANS. EXISTING CONDITIONS AND LOCATION OF EXISTING STRUCTURES SHALL BE DETERMINED BY SURVEY AND FIELD INSPECTION.
2. REFER TO DRAWINGS GP-3 AND GP-4 FOR SECTION LOCATIONS.
3. REFER TO CULVERT LINING DETAIL ON DRAWING ED-6.

ALTERED ON:	AFFIXED ON: 6-21-16
SIGNATURE: STAMP:	SIGNATURE: STAMP: STATE OF NEW YORK · F. DAVID HUDDA · 061048 · LICENSED PROFESSIONAL ENGINEER

IT IS A VIOLATION OF LAW FOR ANY PERSON, UNLESS THEY ARE ACTING UNDER THE DIRECTION OF A LICENSED PROFESSIONAL ENGINEER, ARCHITECT, LANDSCAPE ARCHITECT, OR LAND SURVEYOR, TO ALTER AN ITEM IN ANY WAY. IF AN ITEM BEARING THE STAMP OF A LICENSED PROFESSIONAL IS ALTERED, THE ALTERING ENGINEER, ARCHITECT, LANDSCAPE ARCHITECT, OR LAND SURVEYOR SHALL STAMP THE DOCUMENT AND INCLUDE THE NOTATION "ALTERED BY" FOLLOWED BY THEIR SIGNATURE. THE DATE OF SUCH ALTERATION, AND A SPECIFIC DESCRIPTION OF THE ALTERATION.

REVISIONS

DATE	DESCRIPTION	BY	SYM.

NEW YORK STATE THRUWAY AUTHORITY
DEPARTMENT OF ENGINEERING
200 SOUTHERN BLVD., ALBANY, N.Y. 12209

TITLE OF PROJECT: LOCK E-32 BYPASS CULVERT REPAIR
LOCATION OF PROJECT: TOWN OF PITTSFORD MONROE COUNTY
TITLE OF DRAWING: EXISTING SECTIONS I

CONTRACT NUMBER: TAB 16-26C
DATE: 6/17/16
DRAWING NUMBER: ED-5

DESIGN SUPERVISOR: R. KARIS
DESIGNED BY: J.S. LeBLANC
DRAFTED BY: J.S. LeBLANC
CHECKED BY: D. HUDDA
CHECKED BY: D. HUDDA
2016\B94058\Design\Plans\PLAN SECTIONS.dgn
06/17/2016 4:12:02 PM PLAN SECTIONS.dgn

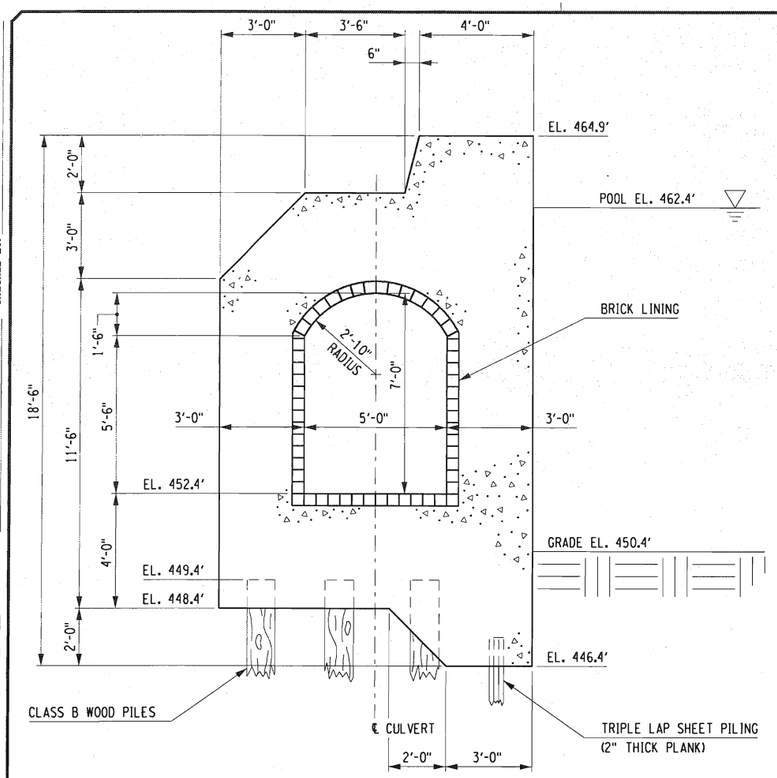

SECTION F-F
SCALE: 3/8" = 1'-0"

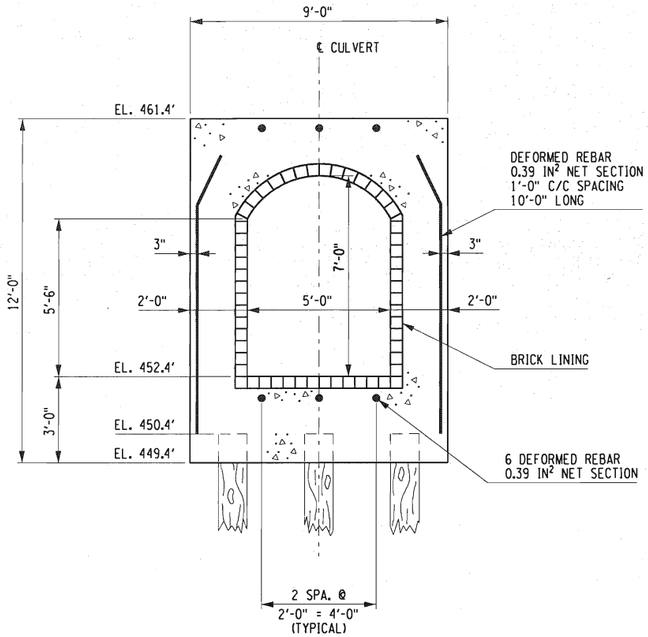

SECTION G-G
SCALE: 3/8" = 1'-0"

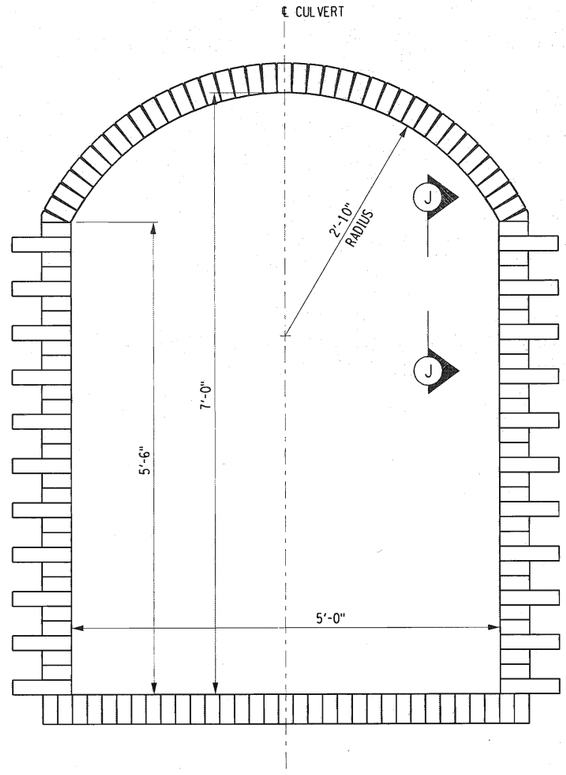

CULVERT LINING DETAIL
NOT TO SCALE

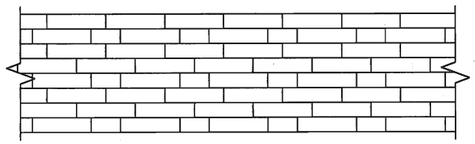

SECTION J-J
NOT TO SCALE

NOTES:

1. THIS DRAWING WAS CREATED USING RECORD PLANS. EXISTING CONDITIONS AND LOCATION OF EXISTING STRUCTURES SHALL BE DETERMINED BY SURVEY AND FIELD INSPECTION.
2. REFER TO DRAWINGS GP-3 AND GP-4 FOR SECTION LOCATIONS.

CULVERT LINING NOTES:

1. CULVERT LINING BRICKS ARE VITRIFIED, LAID IN 1 TO 2 PORTLAND CEMENT MORTAR WITH JOINTS 3/8" MAXIMUM.
2. EVERY OTHER BRICK IN EVERY THIRD COURSE IS SET AS A HEADER.
3. ALTHOUGH THE RECORD PLANS ILLUSTRATE THE CULVERT BEING LINED FROM THE STOP LOG WELL TO THE OUTLET PIPES, WITH CAST IRON LININGS AT THE JOINTS, THE ACTUAL EXTENT OF THE BRICK LINING AND JOINT CASTINGS WERE REDUCED AS ORDERED BY THE ENGINEER DURING CONSTRUCTION, TO THE SEGMENTS WHERE AN ELEVATION OR ALIGNMENT CHANGES, AND IN THE VICINITY OF THE CONTROLLING VALVE.

ALTERED ON:	AFFIXED ON: 6-21-16
SIGNATURE: STAMP:	SIGNATURE: STAMP: STATE OF NEW YORK · F. DAVID HUDDA · 061048 · LICENSED PROFESSIONAL ENGINEER

IT IS A VIOLATION OF LAW FOR ANY PERSON, UNLESS THEY ARE ACTING UNDER THE DIRECTION OF A LICENSED PROFESSIONAL ENGINEER, ARCHITECT, LANDSCAPE ARCHITECT, OR LAND SURVEYOR, TO ALTER AN ITEM IN ANY WAY. IF AN ITEM BEARING THE STAMP OF A LICENSED PROFESSIONAL IS ALTERED, THE ALTERING ENGINEER, ARCHITECT, LANDSCAPE ARCHITECT, OR LAND SURVEYOR SHALL STAMP THE DOCUMENT AND INCLUDE THE NOTATION "ALTERED BY" FOLLOWED BY THEIR SIGNATURE. THE DATE OF SUCH ALTERATION, AND A SPECIFIC DESCRIPTION OF THE ALTERATION.

REVISIONS

DATE	DESCRIPTION	BY	SYM.

NEW YORK STATE THRUWAY AUTHORITY
DEPARTMENT OF ENGINEERING
200 SOUTHERN BLVD., ALBANY, N.Y. 12209

TITLE OF PROJECT: LOCK E-32 BYPASS CULVERT REPAIR
LOCATION OF PROJECT: TOWN OF PITTSFORD, MONROE COUNTY
TITLE OF DRAWING: EXISTING SECTIONS II

CONTRACT NUMBER: TAB 16-26C
DATE: 6/17/16
DRAWING NUMBER: ED-6

DESIGN SUPERVISOR: R. KARIS
DESIGNED BY: J.S. LeBLANC
CHECKED BY: D. HUDDA
DRAFTED BY: J.S. LeBLANC
CHECKED BY: D. HUDDA
2016\894058\Design\Plans\PLAN SECTIONS.dgn

2016/B94058/Design/Plans/APPROACH WALL RESURFACING.dgn
DRAFTED BY: J.S. LeBLANC
CHECKED BY: D. HUDDA
DESIGNED BY: J.S. LeBLANC
CHECKED BY: D. HUDDA
DESIGN SUPERVISOR: R. KARIS

LEGEND

SYMBOL	DESCRIPTION
	STRUCTURAL CONCRETE REMOVAL UNDER ITEM 580.01
	STRUCTURAL CONCRETE REMOVAL TO 1'-0" DEPTH FOR RESURFACING OF WALKWAY UNDER ITEM 580.01
	STRUCTURAL CONCRETE REMOVAL TO EL. 464.9' UNDER ITEM 580.01
	EXISTING CONCRETE (TO REMAIN)
	EXISTING GRADE (TO REMAIN)

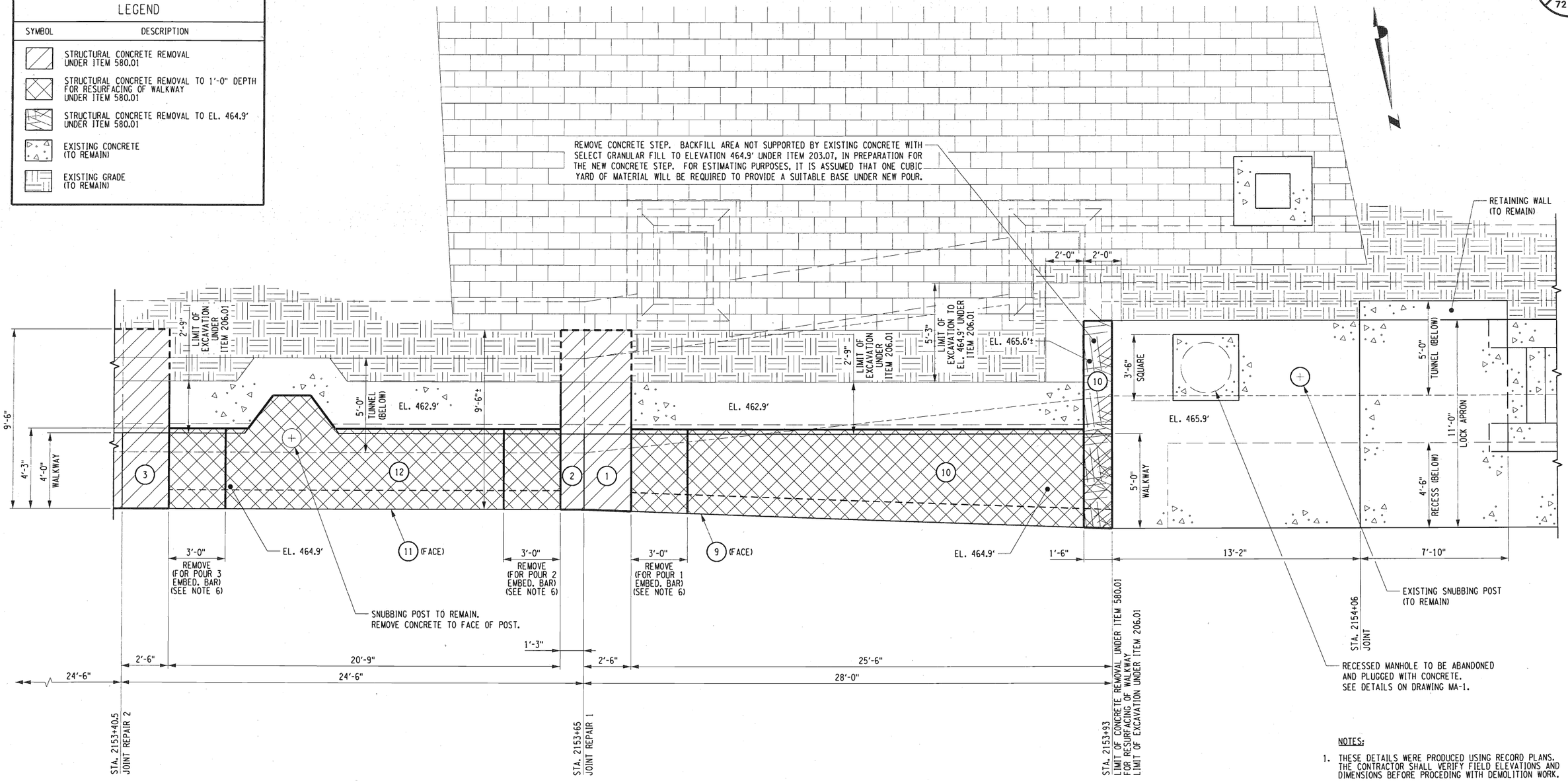

CONCRETE REMOVAL PLAN

SCALE: 3/8" = 1'-0"

NOTES:

1. THESE DETAILS WERE PRODUCED USING RECORD PLANS. THE CONTRACTOR SHALL VERIFY FIELD ELEVATIONS AND DIMENSIONS BEFORE PROCEDING WITH DEMOLITION WORK.
2. LEAVE SURFACE OF CONCRETE IN REMOVAL AREAS UNFINISHED TO ASSIST BONDING WITH NEW POURS.
3. REFER TO DRAWING CR-3 FOR DETAILS OF CONCRETE REMOVAL AT JOINT REPAIRS 1 AND 2.
4. CONCRETE REPLACEMENT AREAS (POUR NUMBERS) ARE INDICATED FOR REFERENCE THUSLY "(#)".
5. REFER TO DRAWINGS CR-4 AND CR-5 FOR DETAILS OF CONCRETE REMOVAL AT APPROACH WALL FACE.
6. REFER TO DRAWINGS CP-3 AND CP-4 FOR DETAILS OF JOINT REPLACEMENTS. JOINT REPAIRS ARE COMPLETED BEFORE RESURFACING OF THE WALKWAY AND APPROACH WALL FACE.

ALTERED ON:	AFFIXED ON: 6-21-16
SIGNATURE: STAMP:	SIGNATURE: STAMP: STATE OF NEW YORK F. DAVID HUDDA 061048 LICENSED PROFESSIONAL ENGINEER

IT IS A VIOLATION OF LAW FOR ANY PERSON, UNLESS THEY ARE ACTING UNDER THE DIRECTION OF A LICENSED PROFESSIONAL ENGINEER, ARCHITECT, LANDSCAPE ARCHITECT, OR LAND SURVEYOR, TO ALTER AN ITEM IN ANY WAY. IF AN ITEM BEARING THE STAMP OF A LICENSED PROFESSIONAL IS ALTERED, THE ALTERING ENGINEER, ARCHITECT, LANDSCAPE ARCHITECT, OR LAND SURVEYOR SHALL STAMP THE DOCUMENT AND INCLUDE THE NOTATION "ALTERED BY" FOLLOWED BY THEIR SIGNATURE. THE DATE OF SUCH ALTERATION, AND A SPECIFIC DESCRIPTION OF THE ALTERATION.

REVISIONS

DATE	DESCRIPTION	BY	SYM.

NEW YORK STATE THRUWAY AUTHORITY
DEPARTMENT OF ENGINEERING
200 SOUTHERN BLVD., ALBANY, N.Y. 12209

TITLE OF PROJECT: LOCK E-32 BYPASS CULVERT REPAIR
LOCATION OF PROJECT: TOWN OF PITTSFORD MONROE COUNTY
TITLE OF DRAWING: CONCRETE REMOVAL DETAILS I

CONTRACT NUMBER: TAB 16-26C
DATE: 6/10/16
DRAWING NUMBER: CR-1

2018/T894058/Design/Plans/APPROACH WALL RESURFACING.dgn
DRAFTED BY: J.S. LeBLANC
CHECKED BY: D. HUDDA
DESIGNED BY: J.S. LeBLANC
CHECKED BY: D. HUDDA
DESIGN SUPERVISOR: R. KARIS

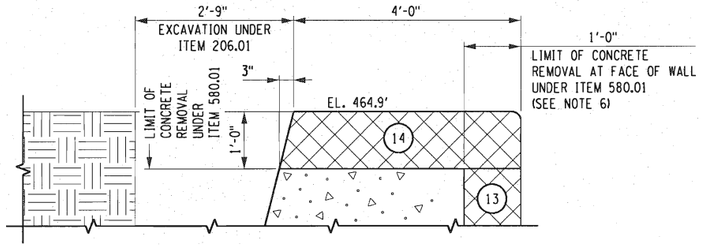

SECTION A-A
TYPICAL REMOVAL
SCALE: 3/4" = 1'-0"

LEGEND	
SYMBOL	DESCRIPTION
	STRUCTURAL CONCRETE REMOVAL UNDER ITEM 580.01
	STRUCTURAL CONCRETE REMOVAL TO 1'-0" DEPTH FOR RESURFACING OF WALKWAY UNDER ITEM 580.01
	EXISTING CONCRETE (TO REMAIN)
	EXISTING GRADE (TO REMAIN)

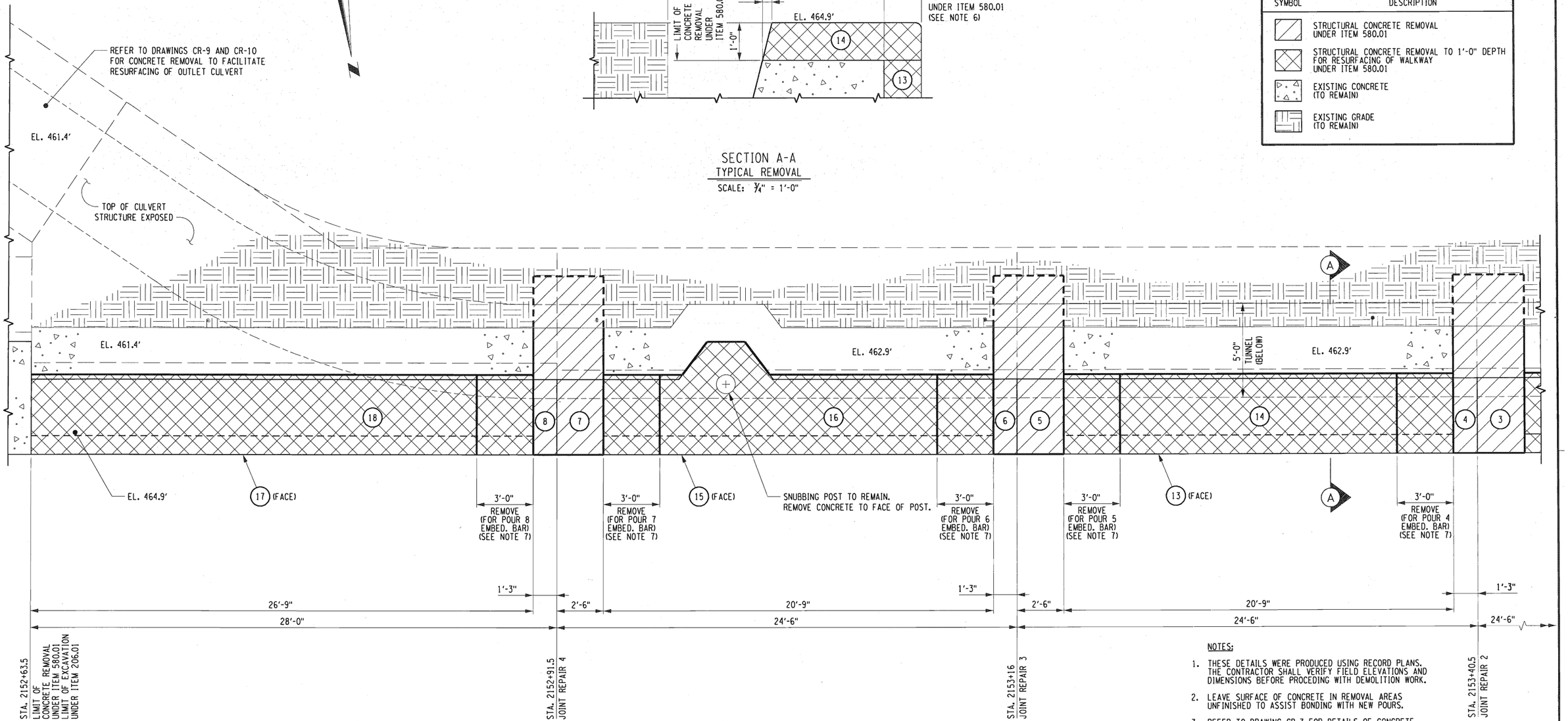

CONCRETE REMOVAL PLAN
SCALE: 3/8" = 1'-0"

NOTES:

1. THESE DETAILS WERE PRODUCED USING RECORD PLANS. THE CONTRACTOR SHALL VERIFY FIELD ELEVATIONS AND DIMENSIONS BEFORE PROCEEDING WITH DEMOLITION WORK.
2. LEAVE SURFACE OF CONCRETE IN REMOVAL AREAS UNFINISHED TO ASSIST BONDING WITH NEW POURS.
3. REFER TO DRAWING CR-3 FOR DETAILS OF CONCRETE REMOVAL AT JOINT REPAIRS 2, 3, AND 4.
4. CONCRETE POUR NUMBERS ARE INDICATED THUSLY "(#)".
5. REFER TO DRAWINGS CR-5 AND CR-6 FOR DETAILS OF CONCRETE REMOVAL AT APPROACH WALL FACE.
6. THE CONTRACTOR SHALL REMOVE CONCRETE UNDER ITEM 580.01 TO THE PAY LIMITS SHOWN. WHEN UNSOUND CONCRETE IS ENCOUNTERED, THE CONTRACTOR SHALL REMOVE UNSOUND CONCRETE TO THE DEPTH REQUIRED BY THE ENGINEER.
7. REFER TO DRAWINGS CP-3 AND CP-4 FOR DETAILS OF JOINT REPLACEMENTS. JOINT REPAIRS ARE COMPLETED BEFORE RESURFACING OF THE WALKWAY AND APPROACH WALL FACE

ALTERED ON:	AFFIXED ON: 6-21-16
SIGNATURE: STAMP:	SIGNATURE: STAMP: STATE OF NEW YORK F. DAVID HUDDA 061048 LICENSED PROFESSIONAL ENGINEER

IT IS A VIOLATION OF LAW FOR ANY PERSON, UNLESS THEY ARE ACTING UNDER THE DIRECTION OF A LICENSED PROFESSIONAL ENGINEER, ARCHITECT, LANDSCAPE ARCHITECT, OR LAND SURVEYOR, TO ALTER AN ITEM IN ANY WAY. IF AN ITEM BEARING THE STAMP OF A LICENSED PROFESSIONAL IS ALTERED, THE ALTERING ENGINEER, ARCHITECT, LANDSCAPE ARCHITECT, OR LAND SURVEYOR SHALL STAMP THE DOCUMENT AND INCLUDE THE NOTATION "ALTERED BY" FOLLOWED BY THEIR SIGNATURE. THE DATE OF SUCH ALTERATION, AND A SPECIFIC DESCRIPTION OF THE ALTERATION.

REVISIONS

DATE	DESCRIPTION	BY	SYM.

NEW YORK STATE THRUWAY AUTHORITY
DEPARTMENT OF ENGINEERING
200 SOUTHERN BLVD., ALBANY, N.Y. 12209

TITLE OF PROJECT: LOCK E-32 BYPASS CULVERT REPAIR
LOCATION OF PROJECT: TOWN OF PITTSFORD MONROE COUNTY
TITLE OF DRAWING: CONCRETE REMOVAL DETAILS II

CONTRACT NUMBER: TAB 15-26C
DATE: 6/10/16
DRAWING NUMBER: CR-2

2016/894058/Design/Plans/APPROACH WALL JOINT REPAIRS.dgn
DRAFTED BY: J.S. LeBLANC
CHECKED BY: D. HUDDA
DESIGNED BY: J.S. LeBLANC
CHECKED BY: D. HUDDA
DESIGN SUPERVISOR: R. KARIS

NOTES:

1. THESE DETAILS WERE PRODUCED USING RECORD PLANS. THE CONTRACTOR SHALL VERIFY FIELD ELEVATIONS AND DIMENSIONS BEFORE PROCEDING WITH DEMOLITION WORK.
2. REFER TO DRAWINGS ED-5 AND ED-6 FOR EXISTING SECTIONS AND BRICK LINING DETAILS.
3. LIMIT CONCRETE REMOVAL TO EXTENT NECESSARY FOR EXISTING CAST IRON LININGS TO BE REMOVED. THE CONTRACTOR IS SPECIFICALLY ADVISED TO LIMIT ENCROACHMENT INTO THE RADIUSED SECTION ON THE GROUND SIDE OF THE APPROACH WALL ABOVE THE TUNNEL.
4. THE CONTRACTOR IS ADVISED THAT THE DIRECTION OF THE ORIGINAL JOINT KEYS CAN NOT BE DETERMINED BY THE RECORD PLANS.
5. LEAVE SURFACE OF CONCRETE IN REMOVAL AREAS UNFINISHED TO ASSIST BONDING WITH NEW POURS.
6. LIMIT BRICK REMOVAL TO EXTENT NECESSARY FOR REMOVAL OF CONCRETE AND CAST IRON FRAME IN THE IMMEDIATE VICINITY OF THE CONSTRUCTION JOINT. SEE DRAWING CG-2 FOR BRICK VOID REPAIR DETAIL.
7. REFER TO BRICK LINING REPAIR NOTES ON DRAWING GN-1.

LEGEND

SYMBOL	DESCRIPTION
	EXISTING BRICK LINING TO REMAIN EXCEPT IN CONCRETE REMOVAL AREA (INCLUDE REMOVAL COST IN ITEM 580.01)
	STRUCTURAL CONCRETE REMOVAL UNDER ITEM 580.01
	STRUCTURAL CONCRETE REMOVAL TO 1'-0" DEPTH FOR RESURFACING OF WALKWAY UNDER ITEM 580.01
	EXISTING CONCRETE (TO REMAIN)
	EXISTING GRADE (TO REMAIN)

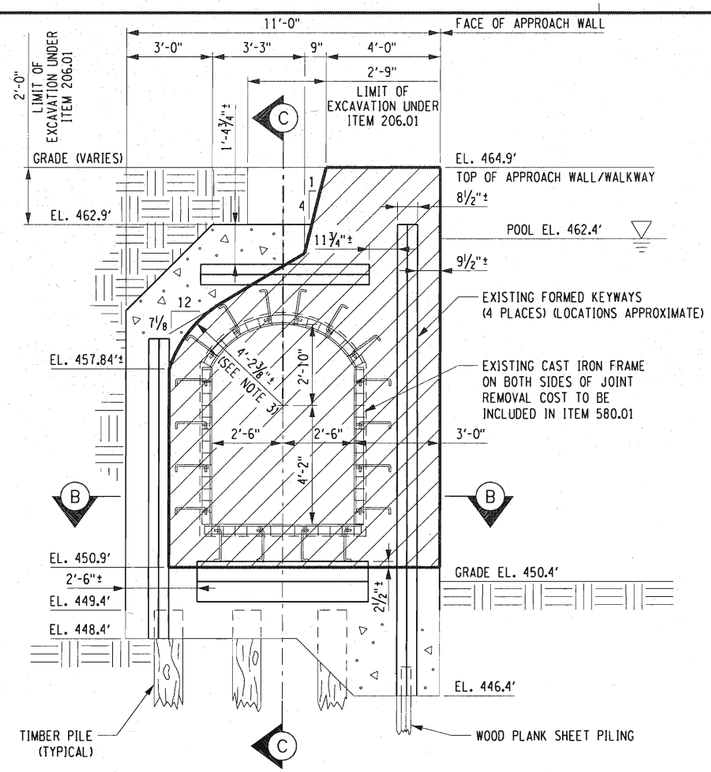

SECTION A-A
SCALE: ⅜" = 1'-0"

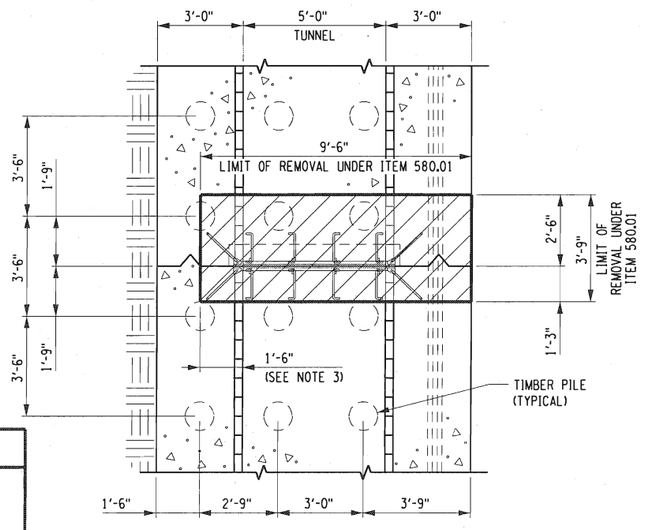

SECTION B-B
SCALE: ⅜" = 1'-0"

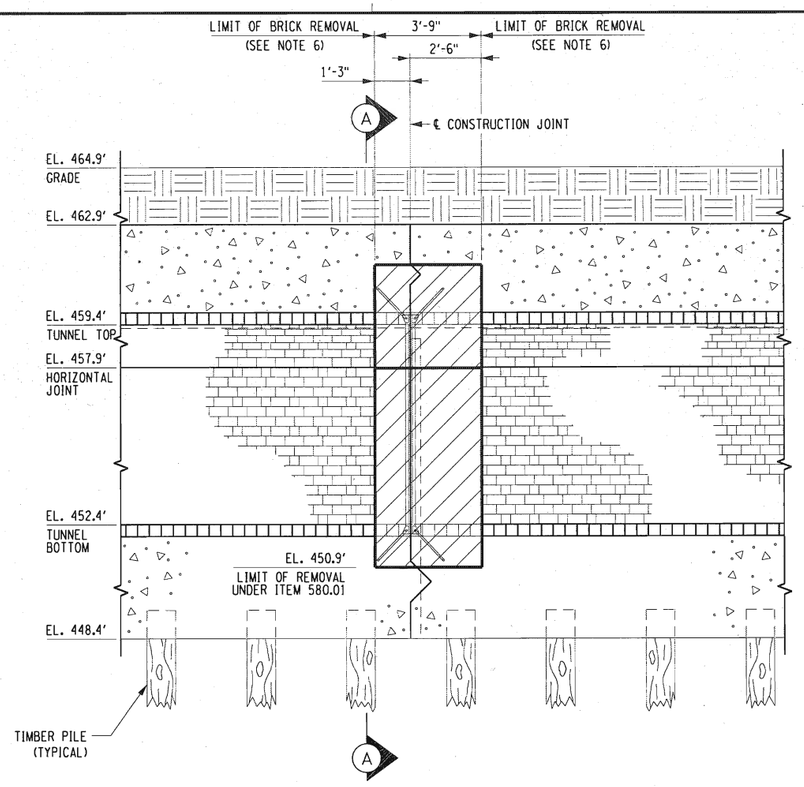

SECTION C-C
REMOVAL SECTION AT CENTERLINE OF CULVERT
SCALE: ⅜" = 1'-0"

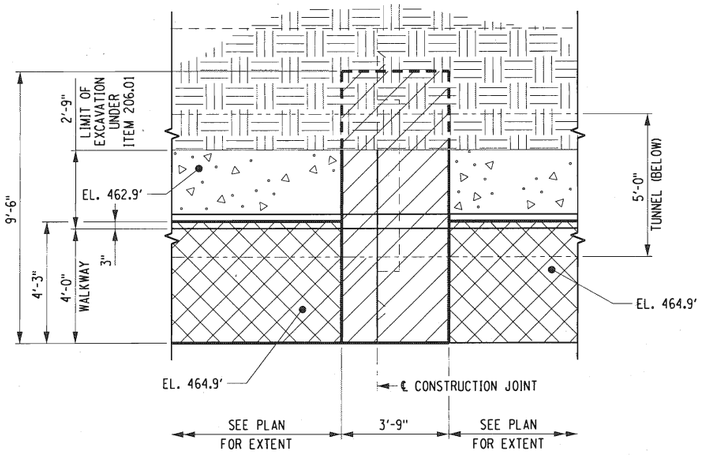

TYPICAL REMOVAL PLAN
SCALE: ⅜" = 1'-0"

ALTERED ON:	AFFIXED ON: 6-21-16
SIGNATURE: STAMP:	SIGNATURE: STAMP: STATE OF NEW YORK · F. DAVID HUDDA · 061048 · LICENSED PROFESSIONAL ENGINEER

IT IS A VIOLATION OF LAW FOR ANY PERSON, UNLESS THEY ARE ACTING UNDER THE DIRECTION OF A LICENSED PROFESSIONAL ENGINEER, ARCHITECT, LANDSCAPE ARCHITECT, OR LAND SURVEYOR, TO ALTER AN ITEM IN ANY WAY. IF AN ITEM BEARING THE STAMP OF A LICENSED PROFESSIONAL IS ALTERED, THE ALTERING ENGINEER, ARCHITECT, LANDSCAPE ARCHITECT, OR LAND SURVEYOR SHALL STAMP THE DOCUMENT AND INCLUDE THE NOTATION "ALTERED BY" FOLLOWED BY THEIR SIGNATURE. THE DATE OF SUCH ALTERATION, AND A SPECIFIC DESCRIPTION OF THE ALTERATION.

REVISIONS

DATE	DESCRIPTION	BY	SYM.

NEW YORK STATE THRUWAY AUTHORITY
DEPARTMENT OF ENGINEERING
200 SOUTHERN BLVD., ALBANY, N.Y. 12209

TITLE OF PROJECT: LOCK E-32 BYPASS CULVERT REPAIR
LOCATION OF PROJECT: TOWN OF PITTSFORD, MONROE COUNTY
TITLE OF DRAWING: CONCRETE REMOVAL DETAILS III

CONTRACT NUMBER: TAB 16-26C
DATE: 6/14/16
DRAWING NUMBER: CR-3

2016/B94056/Design/Plans/APPROACH WALL RESURFACING.dgn
DRAFTED BY: J.S. LeBLANC
CHECKED BY: D. HUDDA
DESIGNED BY: J.S. LeBLANC
CHECKED BY: D. HUDDA
DESIGN SUPERVISOR: R. KARIS

LEGEND

SYMBOL	DESCRIPTION
	STRUCTURAL CONCRETE REMOVAL UNDER ITEM 580.01
	STRUCTURAL CONCRETE REMOVAL TO 1'-0" DEPTH FOR RESURFACING OF WALKWAY UNDER ITEM 580.01
	STRUCTURAL CONCRETE REMOVAL TO EL. 464.9' UNDER ITEM 580.01
	EXISTING CONCRETE (TO REMAIN)
	EXISTING GRADE (TO REMAIN)

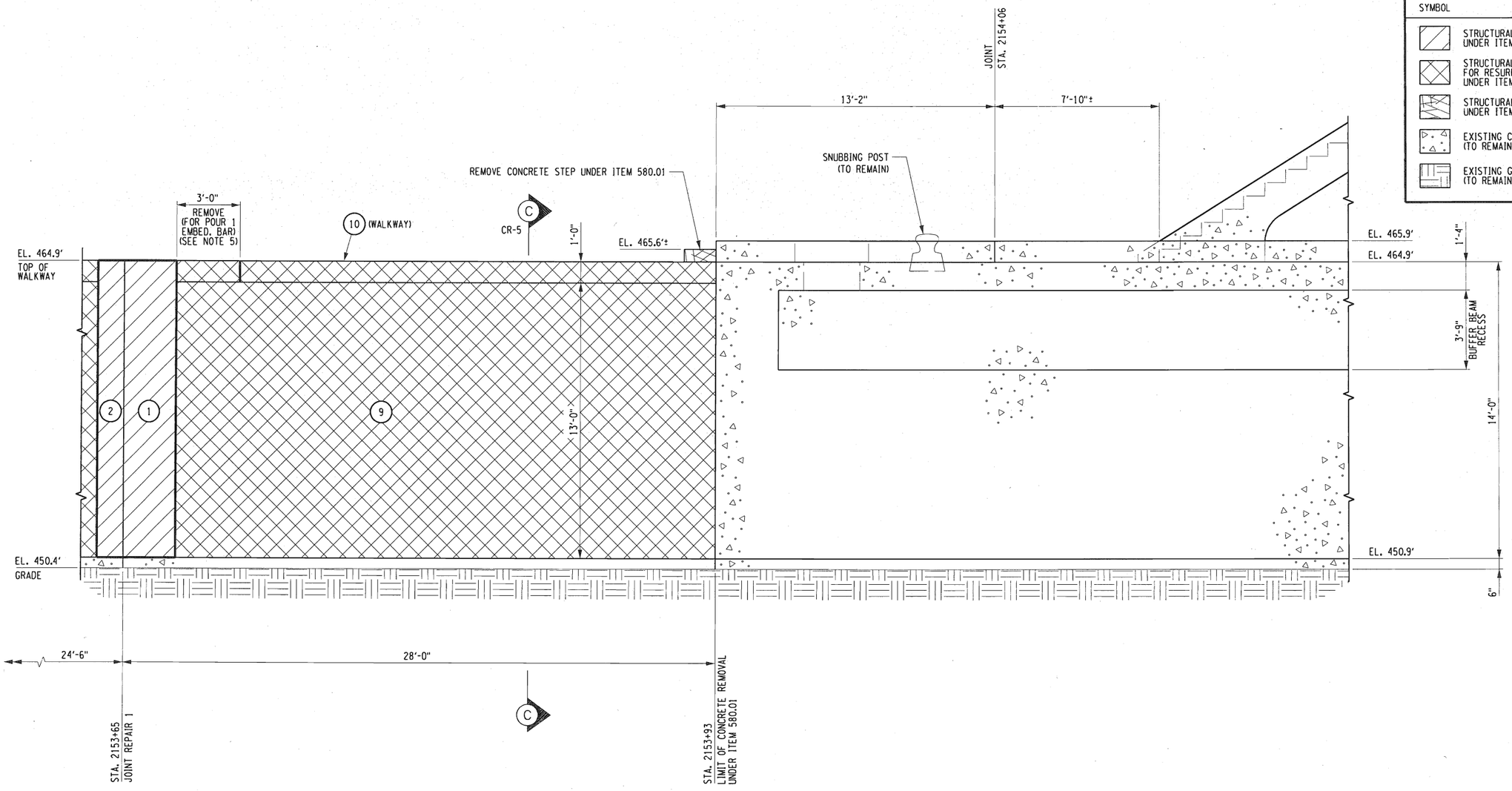

CONCRETE REMOVAL ELEVATION

SCALE: 3/8" = 1'-0"

NOTES:

1. THESE DETAILS WERE PRODUCED USING RECORD PLANS. THE CONTRACTOR SHALL VERIFY FIELD ELEVATIONS AND DIMENSIONS BEFORE PROCEEDING WITH DEMOLITION WORK.
2. LEAVE SURFACE OF CONCRETE IN REMOVAL AREAS UNFINISHED TO ASSIST BONDING WITH NEW POURS.
3. REFER TO DRAWING CR-3 FOR DETAILS OF CONCRETE REMOVAL AT JOINT REPAIRS.
4. CONCRETE POUR NUMBERS ARE INDICATED THUSLY "(#)".
5. SEE NOTE 6 ON DRAWING CR-1.

ALTERED ON:	AFFIXED ON: 6-21-16
SIGNATURE: STAMP:	SIGNATURE: STAMP: STATE OF NEW YORK · F. DAVID HUDDA · 061048 · LICENSED PROFESSIONAL ENGINEER

IT IS A VIOLATION OF LAW FOR ANY PERSON, UNLESS THEY ARE ACTING UNDER THE DIRECTION OF A LICENSED PROFESSIONAL ENGINEER, ARCHITECT, LANDSCAPE ARCHITECT, OR LAND SURVEYOR, TO ALTER AN ITEM IN ANY WAY. IF AN ITEM BEARING THE STAMP OF A LICENSED PROFESSIONAL IS ALTERED, THE ALTERING ENGINEER, ARCHITECT, LANDSCAPE ARCHITECT, OR LAND SURVEYOR SHALL STAMP THE DOCUMENT AND INCLUDE THE NOTATION "ALTERED BY" FOLLOWED BY THEIR SIGNATURE. THE DATE OF SUCH ALTERATION, AND A SPECIFIC DESCRIPTION OF THE ALTERATION.

REVISIONS

DATE	DESCRIPTION	BY	SYM.

NEW YORK STATE THRUWAY AUTHORITY
DEPARTMENT OF ENGINEERING
200 SOUTHERN BLVD., ALBANY, N.Y. 12209

TITLE OF PROJECT: LOCK E-32 BYPASS CULVERT REPAIR
LOCATION OF PROJECT: TOWN OF PITTSFORD, MONROE COUNTY
TITLE OF DRAWING: CONCRETE REMOVAL DETAILS IV

CONTRACT NUMBER: TAB 16-26C
DATE: 6/10/16
DRAWING NUMBER: CR-4

2016/B94058/Design/Plans/APPROACH WALL RESURFACING.dgn
DRAFTED BY: J.S. LeBLANC
CHECKED BY: D. HUDDA
DESIGNED BY: J.S. LeBLANC
CHECKED BY: D. HUDDA
DESIGN SUPERVISOR: R. KARIS

LEGEND

SYMBOL	DESCRIPTION
	STRUCTURAL CONCRETE REMOVAL UNDER ITEM 580.01
	STRUCTURAL CONCRETE REMOVAL TO 1'-0" DEPTH FOR RESURFACING OF APPROACH WALL FACE AND WALKWAY UNDER ITEM 580.01
	EXISTING CONCRETE (TO REMAIN)
	EXISTING GRADE (TO REMAIN)

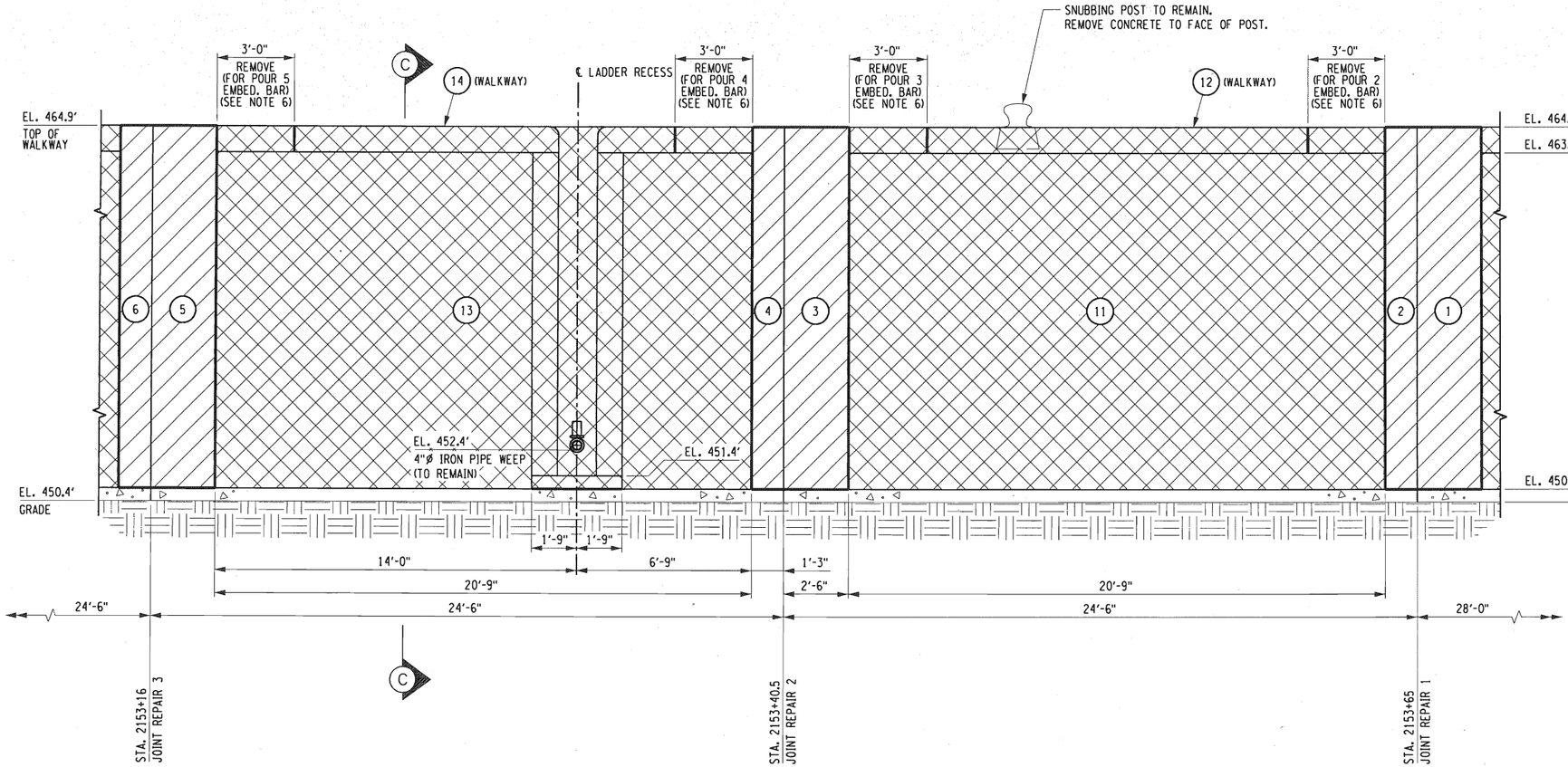

CONCRETE REMOVAL ELEVATION
SCALE: 3/8" = 1'-0"

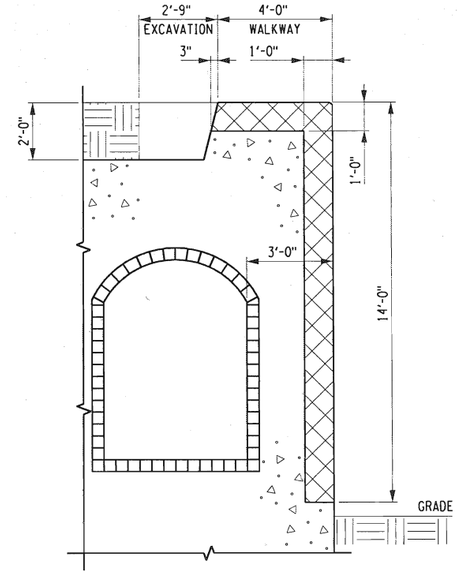

NOTE: TUNNEL LOCATION AS SHOWN BEHIND POURS 11, 13, AND 15.

SECTION C-C
SCALE: 3/8" = 1'-0"

NOTES:

1. THESE DETAILS WERE PRODUCED USING RECORD PLANS. THE CONTRACTOR SHALL VERIFY FIELD ELEVATIONS AND DIMENSIONS BEFORE PROCEEDING WITH DEMOLITION WORK.
2. LEAVE SURFACE OF CONCRETE IN REMOVAL AREAS UNFINISHED TO ASSIST BONDING WITH NEW POURS.
3. REFER TO DRAWING CR-3 FOR DETAILS OF CONCRETE REMOVAL AT JOINT REPAIRS.
4. CONCRETE POUR NUMBERS ARE INDICATED THUSLY "(#)".
5. REMOVE CONCRETE TO SURFACE OF WROUGHT IRON WEEP PIPE CAREFULLY TO AVOID DAMAGE. REFER TO SECTION D-D ON DRAWING CP-6.
6. SEE NOTE 6 ON DRAWING CR-1.

ALTERED ON:	AFFIXED ON: 6-21-16
SIGNATURE: STAMP:	SIGNATURE: STAMP: STATE OF NEW YORK · F. DAVID HUDDA · 061048 · LICENSED PROFESSIONAL ENGINEER

IT IS A VIOLATION OF LAW FOR ANY PERSON, UNLESS THEY ARE ACTING UNDER THE DIRECTION OF A LICENSED PROFESSIONAL ENGINEER, ARCHITECT, LANDSCAPE ARCHITECT, OR LAND SURVEYOR, TO ALTER AN ITEM IN ANY WAY. IF AN ITEM BEARING THE STAMP OF A LICENSED PROFESSIONAL IS ALTERED, THE ALTERING ENGINEER, ARCHITECT, LANDSCAPE ARCHITECT, OR LAND SURVEYOR SHALL STAMP THE DOCUMENT AND INCLUDE THE NOTATION "ALTERED BY" FOLLOWED BY THEIR SIGNATURE, THE DATE OF SUCH ALTERATION, AND A SPECIFIC DESCRIPTION OF THE ALTERATION.

REVISIONS

DATE	DESCRIPTION	BY	SYM.

NEW YORK STATE THRUWAY AUTHORITY
DEPARTMENT OF ENGINEERING
200 SOUTHERN BLVD., ALBANY, N.Y. 12209

TITLE OF PROJECT: LOCK E-32 BYPASS CULVERT REPAIR
LOCATION OF PROJECT: TOWN OF PITTSFORD MONROE COUNTY
TITLE OF DRAWING: CONCRETE REMOVAL DETAILS V

CONTRACT NUMBER: TAB 16-26C
DATE: 6/10/16
DRAWING NUMBER: CR-5

2016/B94058/Design/Plans/APPROACH WALL RESURFACING.dgn
DRAFTED BY: J.S. LeBLANC
CHECKED BY: D. HUDDA
DESIGNED BY: J.S. LeBLANC
CHECKED BY: D. HUDDA
DESIGN SUPERVISOR: R. KARIS

LEGEND

SYMBOL	DESCRIPTION
	STRUCTURAL CONCRETE REMOVAL UNDER ITEM 580.01
	STRUCTURAL CONCRETE REMOVAL TO 1'-0" DEPTH FOR RESURFACING OF APPROACH WALL FACE AND WALKWAY UNDER ITEM 580.01
	EXISTING CONCRETE (TO REMAIN)
	EXISTING GRADE (TO REMAIN)

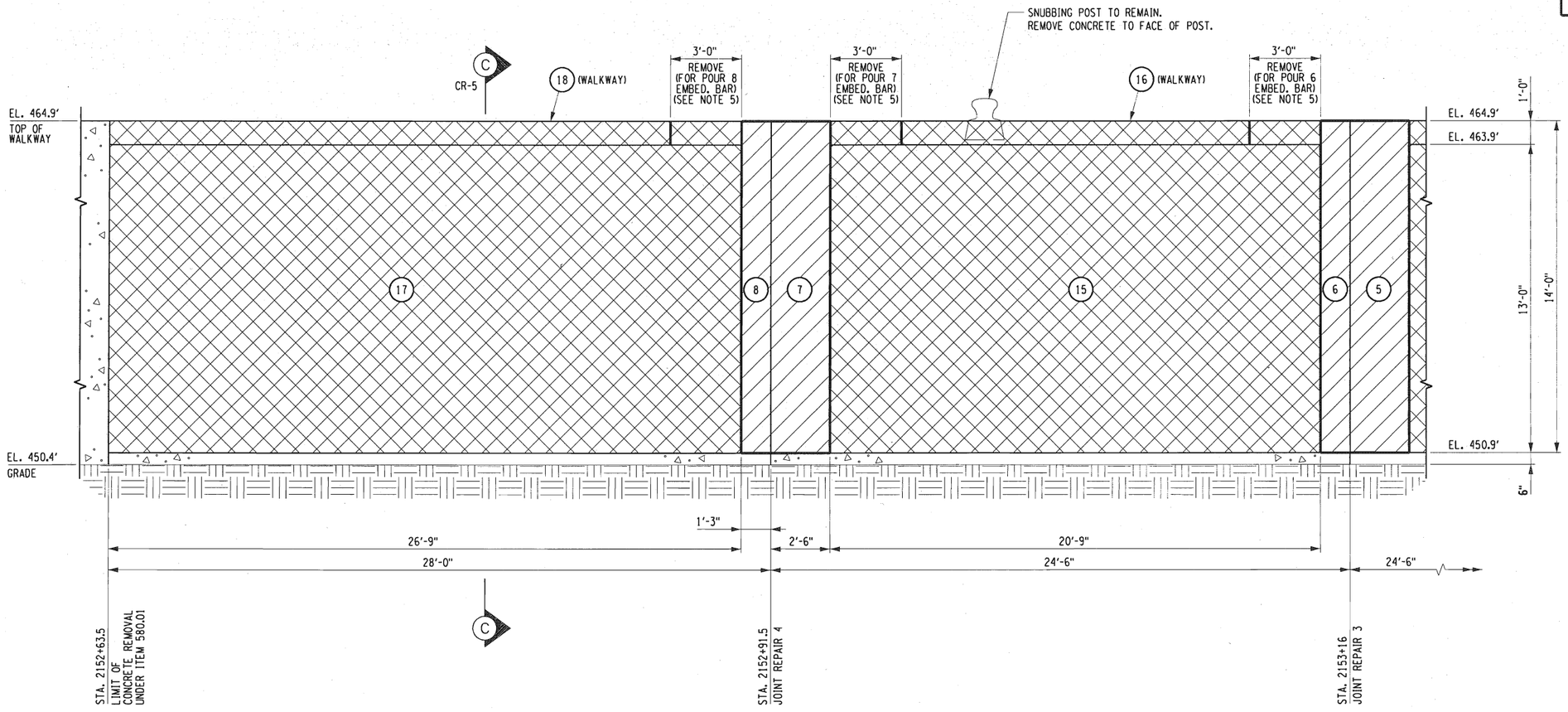

CONCRETE REMOVAL ELEVATION
SCALE: 3/8" = 1'-0"

NOTES:

1. THESE DETAILS WERE PRODUCED USING RECORD PLANS. THE CONTRACTOR SHALL VERIFY FIELD ELEVATIONS AND DIMENSIONS BEFORE PROCEDING WITH DEMOLITION WORK.
2. LEAVE SURFACE OF CONCRETE IN REMOVAL AREAS UNFINISHED TO ASSIST BONDING WITH NEW POURS.
3. REFER TO DRAWING CR-3 FOR DETAILS OF CONCRETE REMOVAL AT JOINT REPAIRS.
4. CONCRETE POUR NUMBERS ARE INDICATED THUSLY "(#)".
5. SEE NOTE 6 ON DRAWING CR-1.

ALTERED ON:	AFFIXED ON: 6-21-16
SIGNATURE: STAMP:	SIGNATURE: STAMP: STATE OF NEW YORK F. DAVID HUDDA 061045 LICENSED PROFESSIONAL ENGINEER

IT IS A VIOLATION OF LAW FOR ANY PERSON, UNLESS THEY ARE ACTING UNDER THE DIRECTION OF A LICENSED PROFESSIONAL ENGINEER, ARCHITECT, LANDSCAPE ARCHITECT, OR LAND SURVEYOR, TO ALTER AN ITEM IN ANY WAY. IF AN ITEM BEARING THE STAMP OF A LICENSED PROFESSIONAL IS ALTERED, THE ALTERING ENGINEER, ARCHITECT, LANDSCAPE ARCHITECT, OR LAND SURVEYOR SHALL STAMP THE DOCUMENT AND INCLUDE THE NOTATION "ALTERED BY" FOLLOWED BY THEIR SIGNATURE. THE DATE OF SUCH ALTERATION, AND A SPECIFIC DESCRIPTION OF THE ALTERATION.

REVISIONS

DATE	DESCRIPTION	BY	SYM.

NEW YORK STATE THRUWAY AUTHORITY
DEPARTMENT OF ENGINEERING
200 SOUTHERN BLVD., ALBANY, N.Y. 12209

TITLE OF PROJECT: LOCK E-32 BYPASS CULVERT REPAIR
LOCATION OF PROJECT: TOWN OF PITTSFORD MONROE COUNTY
TITLE OF DRAWING: CONCRETE REMOVAL DETAILS VI

CONTRACT NUMBER: TAB 16-26C
DATE: 6/10/16
DRAWING NUMBER: CR-6

2016\B94058\Design\Plans\PROPOSED BYPASS VALVE.dgn
DRAFTED BY: J.S. LeBLANC
CHECKED BY: D. HUDDA
DESIGNED BY: J.S. LeBLANC
CHECKED BY: D. HUDDA
DESIGN SUPERVISOR: R. KARIS

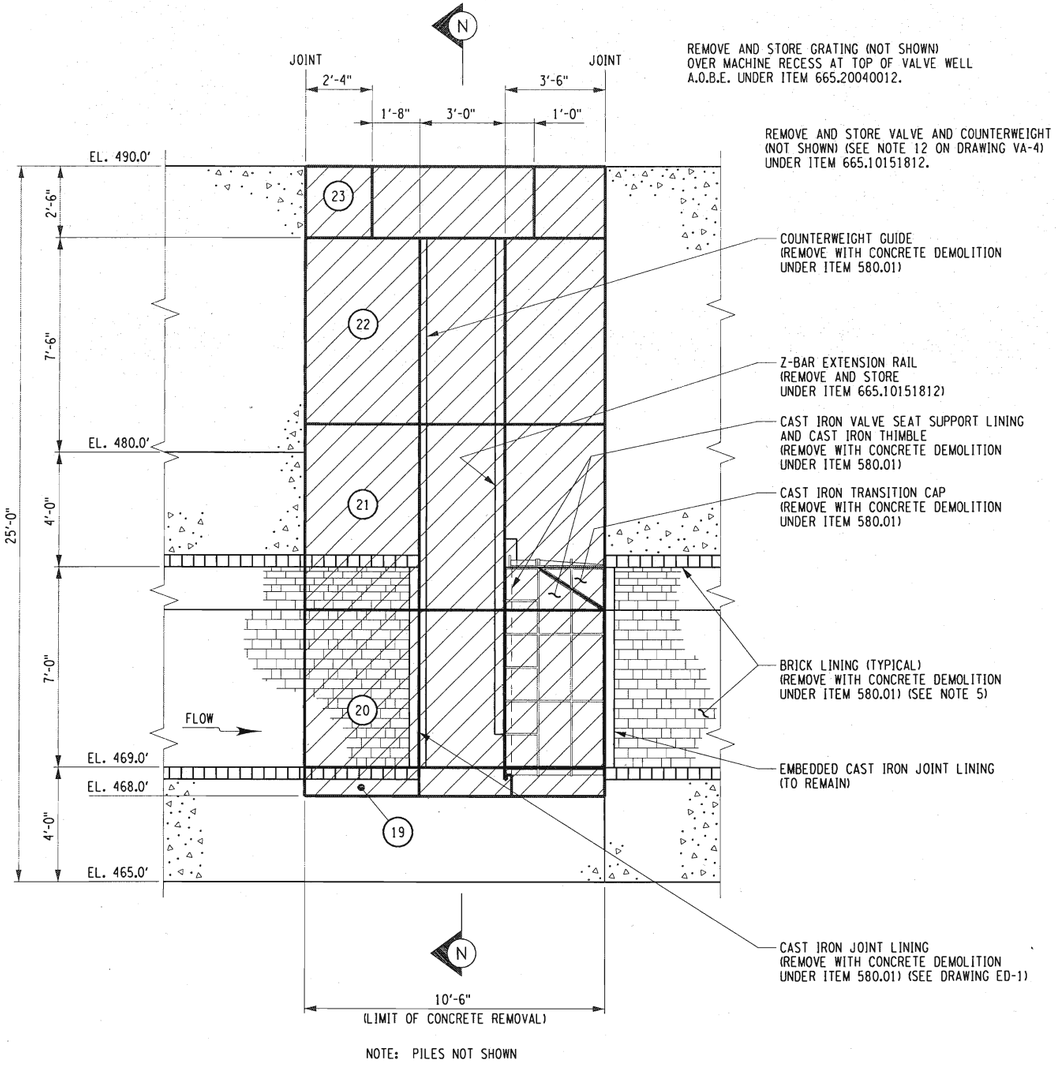

NOTE: PILES NOT SHOWN

BYPASS CULVERT VALVE WELL SECTION AT CENTERLINE OF TUNNEL
SCALE: 3/8" = 1'-0"

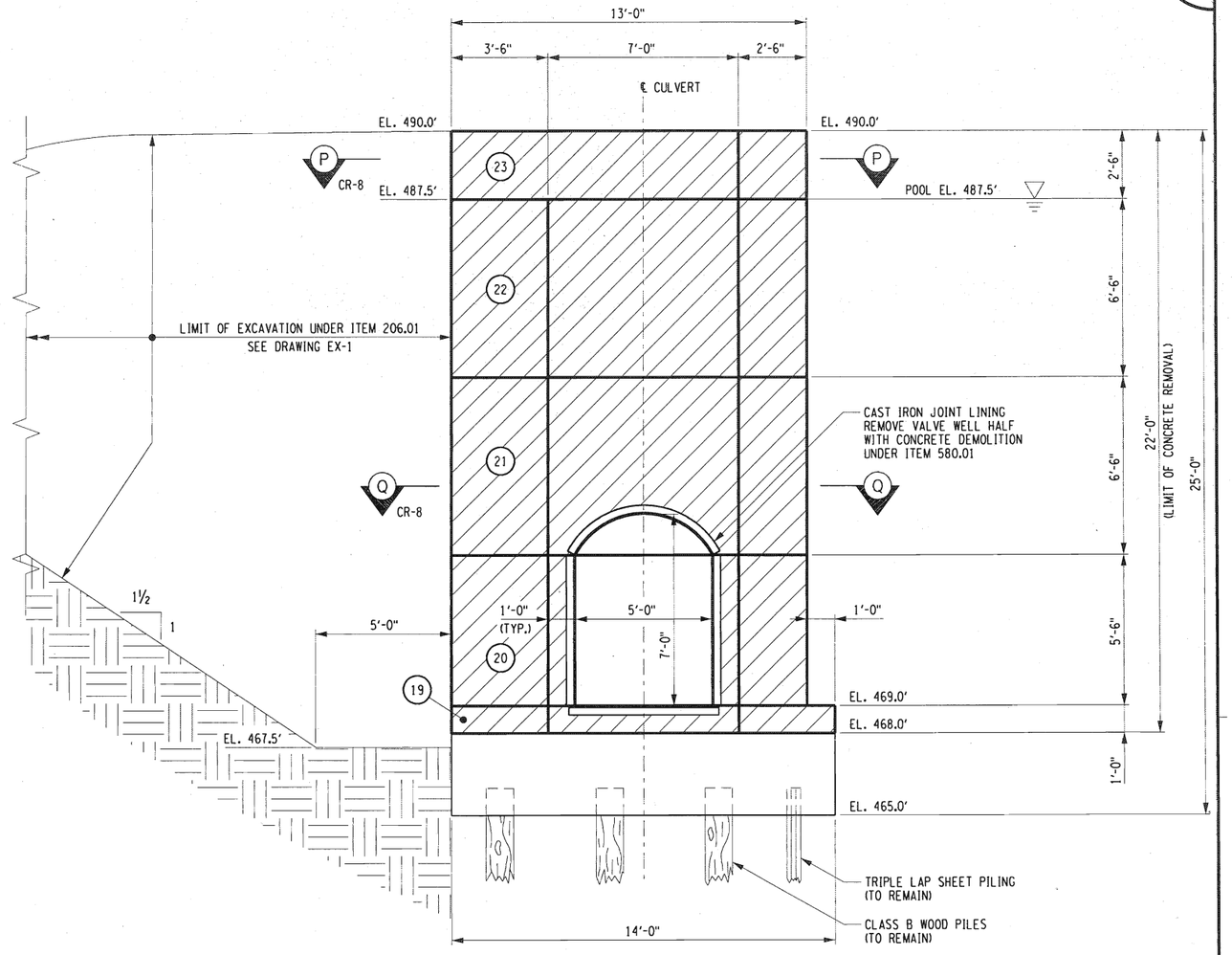

SECTION N-N
SCALE: 3/8" = 1'-0"

NOTES:

1. THESE DETAILS WERE PRODUCED USING RECORD PLANS. THE CONTRACTOR SHALL VERIFY FIELD ELEVATIONS AND DIMENSIONS BEFORE PROCEDING WITH DEMOLITION WORK.
2. LEAVE SURFACE OF CONCRETE IN REMOVAL AREAS UNFINISHED TO ASSIST BONDING WITH NEW POURS.
3. REFER TO DRAWING CR-8 FOR SECTIONS AND DETAILS.
4. CONCRETE REPLACEMENT AREAS (POUR NUMBERS) ARE INDICATED FOR REFERENCE THUSLY "(#)".
5. LIMIT BRICK REMOVAL TO EXTENT NECESSARY FOR REMOVAL OF VALVE WELL CONCRETE AND CAST IRON FRAMES. SEE DRAWING CG-1 FOR BRICK VOID REPAIR DETAIL.

LEGEND

SYMBOL	DESCRIPTION
	EXISTING BRICK LINING TO REMAIN EXCEPT IN CONCRETE REMOVAL AREA (INCLUDE REMOVAL COST IN ITEM 580.01)
	STRUCTURAL CONCRETE REMOVAL UNDER ITEM 580.01
	EXISTING CONCRETE (TO REMAIN)
	EXISTING GRADE/EMBANKMENT (TO REMAIN)

ALTERED ON:	AFFIXED ON: 1-27-16
SIGNATURE: STAMP:	SIGNATURE: STAMP: STATE OF NEW YORK F. DAVID HUDDA 061048 LICENSED PROFESSIONAL ENGINEER

IT IS A VIOLATION OF LAW FOR ANY PERSON, UNLESS THEY ARE ACTING UNDER THE DIRECTION OF A LICENSED PROFESSIONAL ENGINEER, ARCHITECT, LANDSCAPE ARCHITECT, OR LAND SURVEYOR, TO ALTER AN ITEM IN ANY WAY. IF AN ITEM BEARING THE STAMP OF A LICENSED PROFESSIONAL IS ALTERED, THE ALTERING ENGINEER, ARCHITECT, LANDSCAPE ARCHITECT, OR LAND SURVEYOR SHALL STAMP THE DOCUMENT AND INCLUDE THE NOTATION "ALTERED BY" FOLLOWED BY THEIR SIGNATURE, THE DATE OF SUCH ALTERATION, AND A SPECIFIC DESCRIPTION OF THE ALTERATION.

REVISIONS

DATE	DESCRIPTION	BY	SYM.

NEW YORK STATE THRUWAY AUTHORITY
DEPARTMENT OF ENGINEERING
200 SOUTHERN BLVD., ALBANY, N.Y. 12209

TITLE OF PROJECT: LOCK E-32 BYPASS CULVERT REPAIR
LOCATION OF PROJECT: TOWN OF PITTSFORD MONROE COUNTY
TITLE OF DRAWING: CONCRETE REMOVAL DETAILS VII

CONTRACT NUMBER: TAB 16-26C
DATE: 6/15/16
DRAWING NUMBER: CR-7

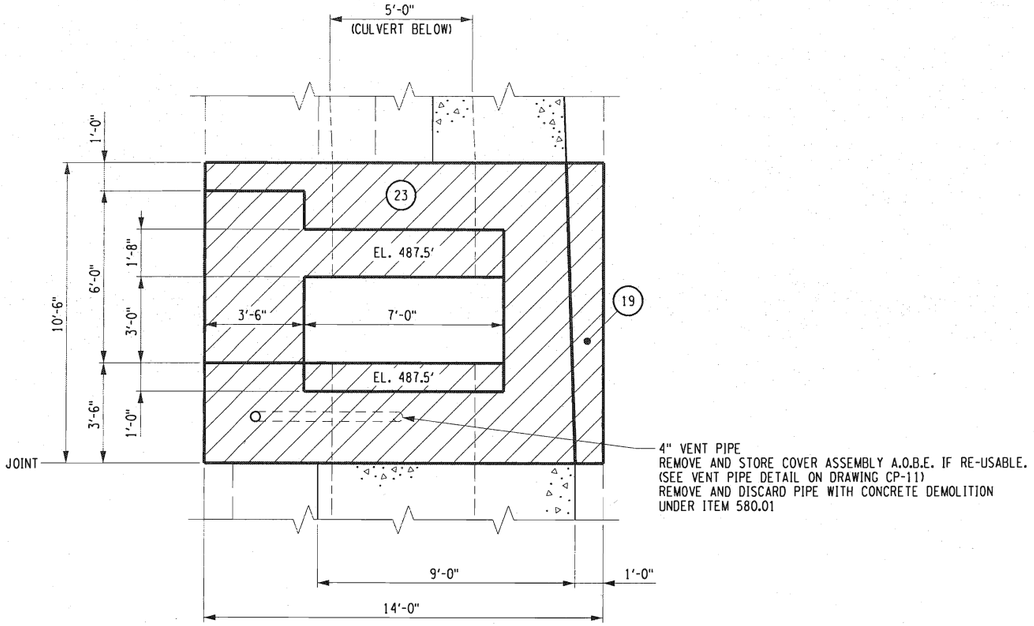

SECTION P-P
SCALE: 3/8" = 1'-0"

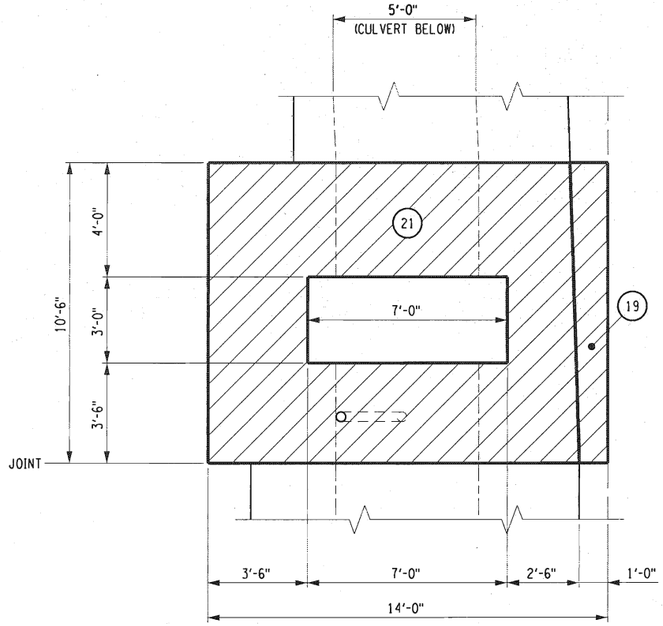

SECTION Q-Q
SCALE: 3/8" = 1'-0"

NOTES:

1. THESE DETAILS WERE PRODUCED USING RECORD PLANS. THE CONTRACTOR SHALL VERIFY FIELD ELEVATIONS AND DIMENSIONS BEFORE PROCEDING WITH DEMOLITION WORK.
2. LEAVE SURFACE OF CONCRETE IN REMOVAL AREAS UNFINISHED TO ASSIST BONDING WITH NEW POURS.
3. CONCRETE REPLACEMENT AREAS (POUR NUMBERS) ARE INDICATED FOR REFERENCE THUSLY "(#)".
4. THE CONTRACTOR SHALL REMOVE AND STORE THE GRATING COVERING THE MACHINERY RECESS AT THE TOP OF THE VALVE WELL UNDER ITEM 665.20040012.
5. THE CONTRACTOR SHALL REMOVE AND DISCARD THE EXISTING EMBEDDED GRATING SUPPORT ANGLES UNDER ITEM 580.01.

LEGEND

SYMBOL	DESCRIPTION
	EXISTING BRICK LINING TO REMAIN EXCEPT IN CONCRETE REMOVAL AREA (INCLUDE REMOVAL COST IN ITEM 580.01)
	STRUCTURAL CONCRETE REMOVAL UNDER ITEM 580.01
	EXISTING CONCRETE (TO REMAIN)
	EXISTING GRADE (TO REMAIN)

ALTERED ON:	AFFIXED ON: 6-21-16
SIGNATURE: STAMP:	SIGNATURE: STAMP: STATE OF NEW YORK · F. DAVID HUDDA · 061048 · LICENSED PROFESSIONAL ENGINEER

IT IS A VIOLATION OF LAW FOR ANY PERSON, UNLESS THEY ARE ACTING UNDER THE DIRECTION OF A LICENSED PROFESSIONAL ENGINEER, ARCHITECT, LANDSCAPE ARCHITECT, OR LAND SURVEYOR, TO ALTER AN ITEM IN ANY WAY. IF AN ITEM BEARING THE STAMP OF A LICENSED PROFESSIONAL IS ALTERED, THE ALTERING ENGINEER, ARCHITECT, LANDSCAPE ARCHITECT, OR LAND SURVEYOR SHALL STAMP THE DOCUMENT AND INCLUDE THE NOTATION "ALTERED BY" FOLLOWED BY THEIR SIGNATURE. THE DATE OF SUCH ALTERATION, AND A SPECIFIC DESCRIPTION OF THE ALTERATION.

REVISIONS

DATE	DESCRIPTION	BY	SYM.

NEW YORK STATE THRUWAY AUTHORITY
DEPARTMENT OF ENGINEERING
200 SOUTHERN BLVD., ALBANY, N.Y. 12209

TITLE OF PROJECT: LOCK E-32 BYPASS CULVERT REPAIR
LOCATION OF PROJECT: TOWN OF PITTSFORD, MONROE COUNTY
TITLE OF DRAWING: CONCRETE REMOVAL DETAILS VIII

CONTRACT NUMBER: TAB 16-26C
DATE: 6/15/16
DRAWING NUMBER: CR-8

DESIGN SUPERVISOR: R. KARIS
DESIGNED BY: J.S. LeBLANC
DRAFTED BY: J.S. LeBLANC
CHECKED BY: D. HUDDA
2016\B94058\Design\Plans\PROPOSED BYPASS VALVE.dgn
CHECKED BY: D. HUDDA

2016/194058/Design/Plans/OUTLET CONCRETE REPAIRS.dgn
CHECKED BY: D. HUDDA
DRAFTED BY: J.S. LeBLANC
CHECKED BY: D. HUDDA
DESIGNED BY: J.S. LeBLANC
DESIGN SUPERVISOR: R. KARIS

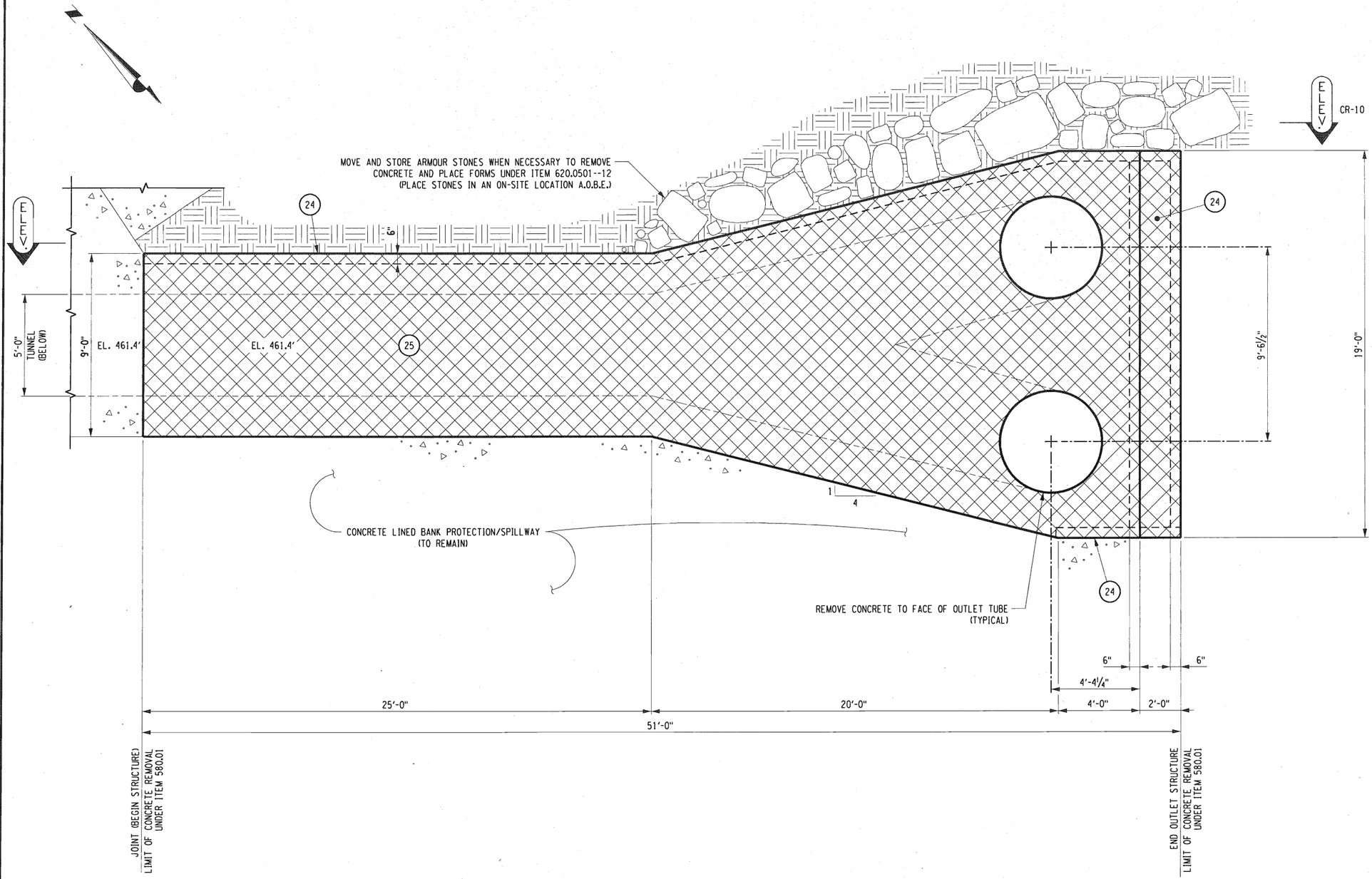

LEGEND

SYMBOL	DESCRIPTION
	STRUCTURAL CONCRETE REMOVAL TO 6" DEPTH FOR RESURFACING OF OUTLET UNDER ITEM 580.01
	EXISTING CONCRETE (TO REMAIN)
	EXISTING GRADE (TO REMAIN)

CONCRETE REMOVAL PLAN

SCALE: ⅜" = 1'-0"

NOTES:

1. THESE DETAILS WERE PRODUCED USING RECORD PLANS. THE CONTRACTOR SHALL VERIFY FIELD ELEVATIONS AND DIMENSIONS BEFORE PROCEDING WITH DEMOLITION WORK.
2. LEAVE SURFACE OF CONCRETE IN REMOVAL AREAS UNFINISHED TO ASSIST BONDING WITH NEW POURS.
3. REFER TO DRAWINGS CP-13 AND CP-14 FOR DETAILS OF CONCRETE AND REINFORCING BAR INSTALLATION.
4. CONCRETE REPLACEMENT AREAS (POUR NUMBERS) ARE INDICATED FOR REFERENCE THUSLY "(#)".
5. THE CONTRACTOR SHALL REMOVE CONCRETE UNDER ITEM 580.01 TO THE PAY LIMITS SHOWN. WHEN UNSOUND CONCRETE IS ENCOUNTERED, THE CONTRACTOR SHALL REMOVE UNSOUND CONCRETE TO THE DEPTH REQUIRED BY THE ENGINEER.

ALTERED ON:	AFFIXED ON: 6-22-16
SIGNATURE: STAMP:	SIGNATURE: STAMP: STATE OF NEW YORK · F. DAVID HUDDA · 061048 · LICENSED PROFESSIONAL ENGINEER

IT IS A VIOLATION OF LAW FOR ANY PERSON, UNLESS THEY ARE ACTING UNDER THE DIRECTION OF A LICENSED PROFESSIONAL ENGINEER, ARCHITECT, LANDSCAPE ARCHITECT, OR LAND SURVEYOR, TO ALTER AN ITEM IN ANY WAY. IF AN ITEM BEARING THE STAMP OF A LICENSED PROFESSIONAL IS ALTERED, THE ALTERING ENGINEER, ARCHITECT, LANDSCAPE ARCHITECT, OR LAND SURVEYOR SHALL STAMP THE DOCUMENT AND INCLUDE THE NOTATION "ALTERED BY" FOLLOWED BY THEIR SIGNATURE, THE DATE OF SUCH ALTERATION, AND A SPECIFIC DESCRIPTION OF THE ALTERATION.

REVISIONS

DATE	DESCRIPTION	BY	SYM.

NEW YORK STATE THRUWAY AUTHORITY
DEPARTMENT OF ENGINEERING
200 SOUTHERN BLVD., ALBANY, N.Y. 12209

TITLE OF PROJECT: LOCK E-32 BYPASS CULVERT REPAIR
LOCATION OF PROJECT: TOWN OF PITTSFORD MONROE COUNTY
TITLE OF DRAWING: CONCRETE REMOVAL DETAILS IX

CONTRACT NUMBER: TAB 16-26C
DATE: 6/14/16
DRAWING NUMBER: CR-9

2016/994058/Design/Plans/OUTLET CONCRETE REPAIRS.dgn
DRAFTED BY: J.S. LeBLANC
CHECKED BY: D. HUDDA
DESIGNED BY: J.S. LeBLANC
CHECKED BY: D. HUDDA
DESIGN SUPERVISOR: R. KARIS

LEGEND	
SYMBOL	DESCRIPTION
	STRUCTURAL CONCRETE REMOVAL TO 6" DEPTH FOR RESURFACING OF OUTLET UNDER ITEM 580.01
	EXISTING CONCRETE (TO REMAIN)
	EXISTING GRADE (TO REMAIN)

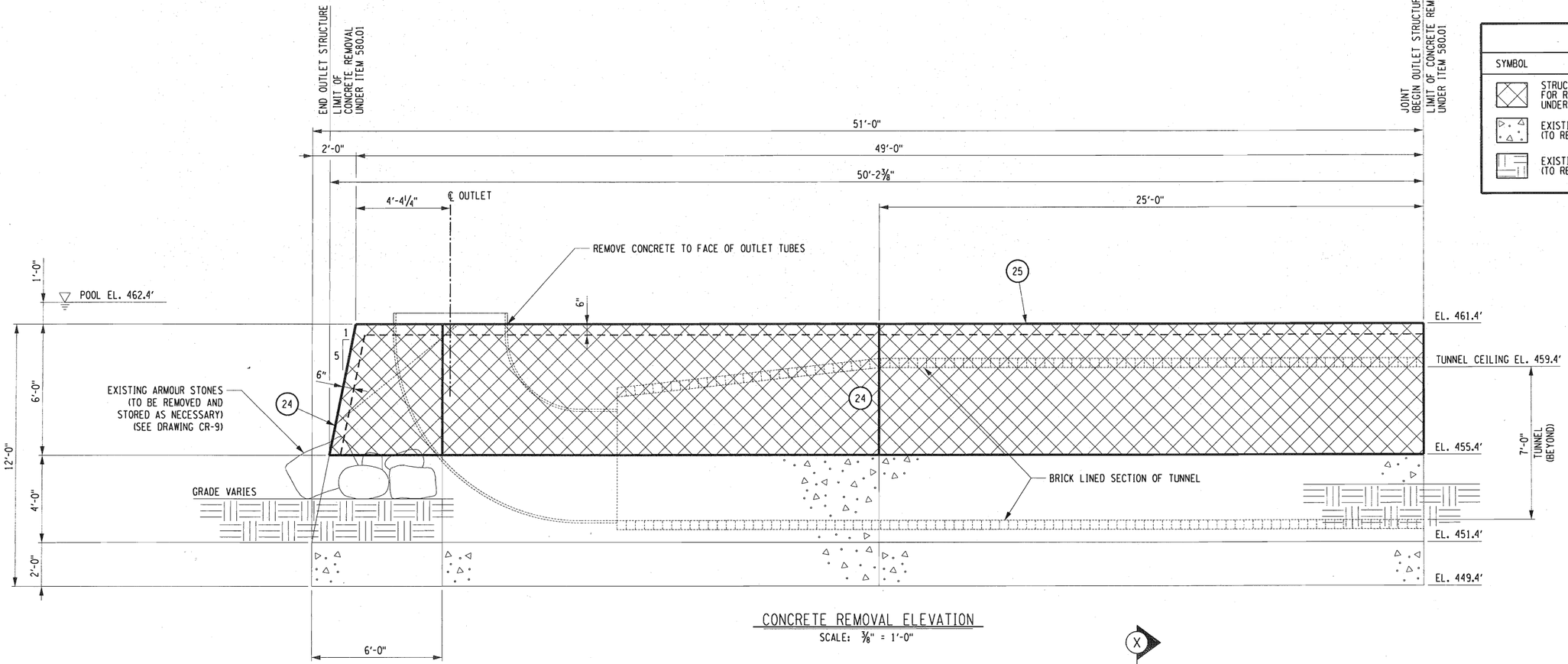

CONCRETE REMOVAL ELEVATION

SCALE: ⅜" = 1'-0"

NOTES:

1. THESE DETAILS WERE PRODUCED USING RECORD PLANS. THE CONTRACTOR SHALL VERIFY FIELD ELEVATIONS AND DIMENSIONS BEFORE PROCEDING WITH DEMOLITION WORK.
2. LEAVE SURFACE OF CONCRETE IN REMOVAL AREAS UNFINISHED TO ASSIST BONDING WITH NEW POURS.
3. REFER TO DRAWINGS CP-13 AND CP-14 FOR DETAILS OF CONCRETE AND REINFORCING BAR INSTALLATION.
4. CONCRETE REPLACEMENT AREAS (POUR NUMBERS) ARE INDICATED FOR REFERENCE THUSLY "(#)".
5. THE CONTRACTOR SHALL REMOVE CONCRETE UNDER ITEM 580.01 TO THE PAY LIMITS SHOWN. WHEN UNSOUND CONCRETE IS ENCOUNTERED, THE CONTRACTOR SHALL REMOVE UNSOUND CONCRETE TO THE DEPTH REQUIRED BY THE ENGINEER.

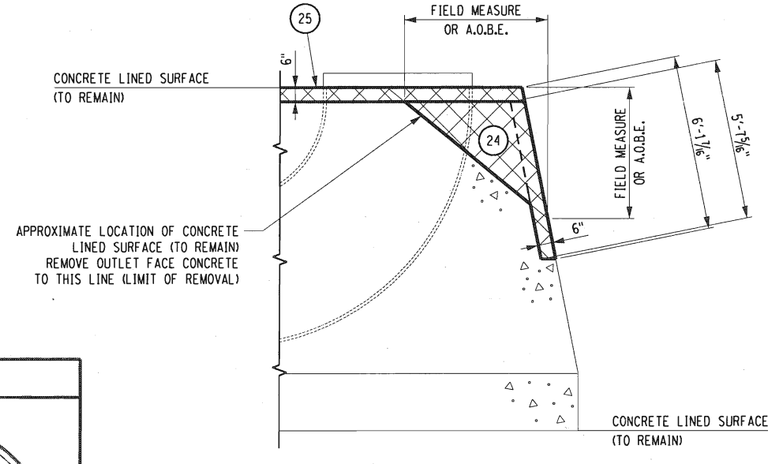

SECTION X-X

SCALE: ⅜" = 1'-0"

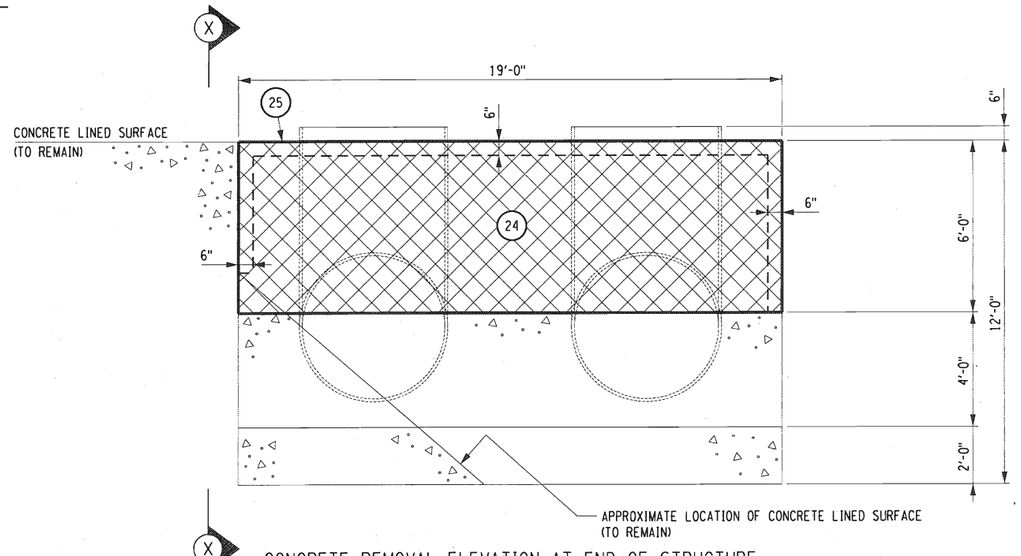

CONCRETE REMOVAL ELEVATION AT END OF STRUCTURE

SCALE: ⅜" = 1'-0"

ALTERED ON:	AFFIXED ON: 6-21-16
SIGNATURE: STAMP:	SIGNATURE: STAMP: STATE OF NEW YORK F. DAVID HUDDA 061048 LICENSED PROFESSIONAL ENGINEER

IT IS A VIOLATION OF LAW FOR ANY PERSON, UNLESS THEY ARE ACTING UNDER THE DIRECTION OF A LICENSED PROFESSIONAL ENGINEER, ARCHITECT, LANDSCAPE ARCHITECT, OR LAND SURVEYOR, TO ALTER AN ITEM IN ANY WAY. IF AN ITEM BEARING THE STAMP OF A LICENSED PROFESSIONAL IS ALTERED, THE ALTERING ENGINEER, ARCHITECT, LANDSCAPE ARCHITECT, OR LAND SURVEYOR SHALL STAMP THE DOCUMENT AND INCLUDE THE NOTATION "ALTERED BY" FOLLOWED BY THEIR SIGNATURE. THE DATE OF SUCH ALTERATION, AND A SPECIFIC DESCRIPTION OF THE ALTERATION.

REVISIONS

DATE	DESCRIPTION	BY	SYM.

NEW YORK STATE THRUWAY AUTHORITY
DEPARTMENT OF ENGINEERING
200 SOUTHERN BLVD., ALBANY, N.Y. 12209

TITLE OF PROJECT	LOCK E-32 BYPASS CULVERT REPAIR
LOCATION OF PROJECT	TOWN OF PITTSFORD MONROE COUNTY
TITLE OF DRAWING	CONCRETE REMOVAL DETAILS X
CONTRACT NUMBER:	TAB 16-26C
DATE:	6/14/16
DRAWING NUMBER:	CR-10

2016/B94058/Design/Plans/INLET CONCRETE REPAIRS.dgn
DRAFTED BY: J.S. LeBLANC
CHECKED BY: D. HUDDA
DESIGNED BY: J.S. LeBLANC
CHECKED BY: D. HUDDA
DESIGN SUPERVISOR: R. KARIS

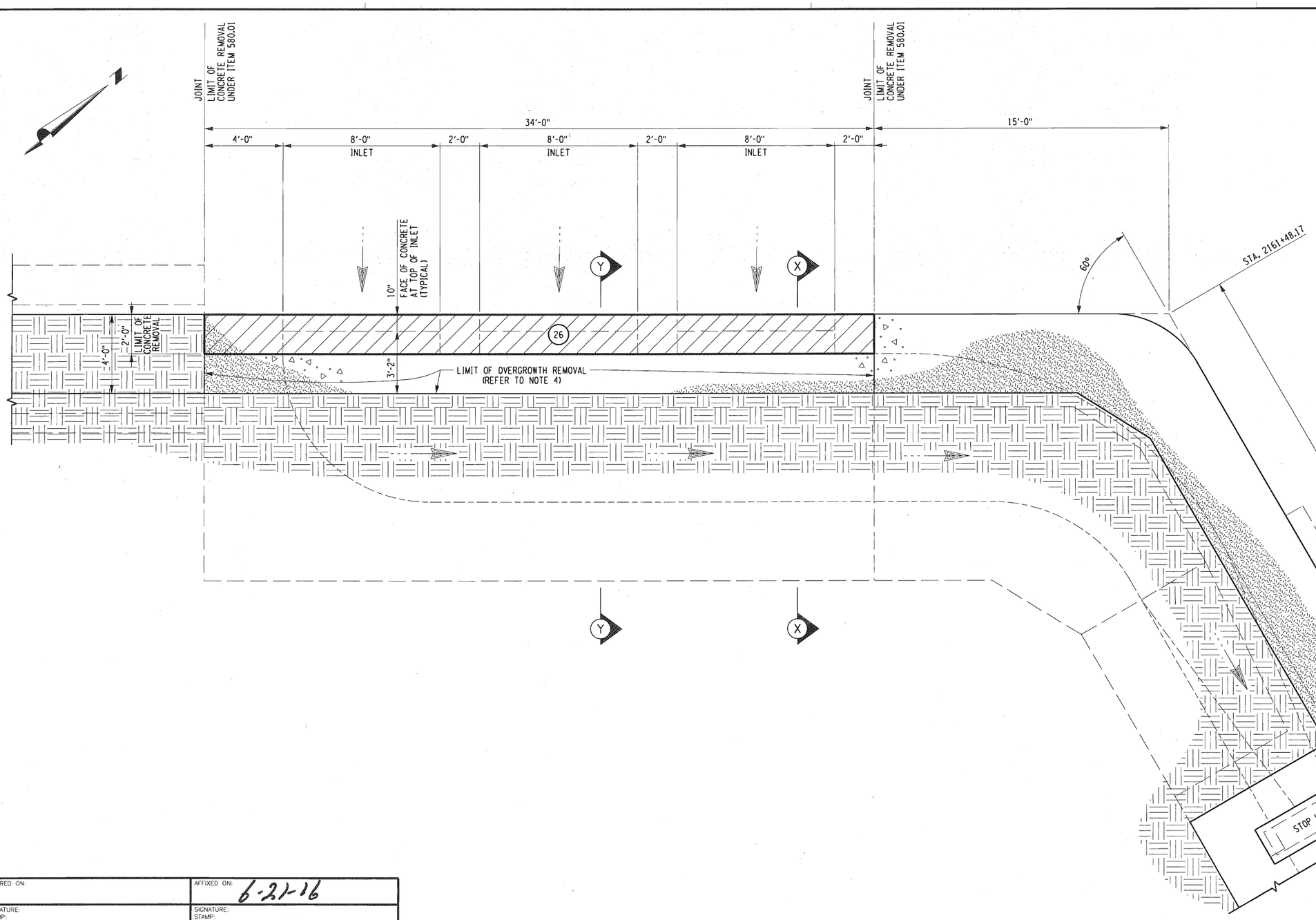

LEGEND

SYMBOL	DESCRIPTION
	STRUCTURAL CONCRETE REMOVAL FOR RECONSTRUCTION OF INLET UNDER ITEM 580.01
	STRUCTURAL CONCRETE REMOVAL TO SPECIFIED DEPTH FOR RESURFACING OF RECESSED FACE UNDER ITEM 580.01
	EXISTING CONCRETE (TO REMAIN)
	EXISTING GRADE (TO REMAIN)
	REMOVE OVERGROWTH TO LIMITS SHOWN UNDER VARIOUS ITEMS OF THE CONTRACT

NOTES:

1. THESE DETAILS WERE PRODUCED USING RECORD PLANS. THE CONTRACTOR SHALL VERIFY FIELD ELEVATIONS AND DIMENSIONS BEFORE PROCEEDING WITH DEMOLITION WORK.
2. LEAVE SURFACE OF CONCRETE IN REMOVAL AREAS UNFINISHED TO ASSIST BONDING WITH NEW POURS.
3. CONCRETE REPLACEMENT AREAS (POUR NUMBERS) ARE INDICATED FOR REFERENCE THUSLY "(#)".
4. REMOVE OVERGROWTH TO LIMITS SHOWN. INCLUDE COST IN ITEM 580.01. THE ENGINEER MAY DIRECT THE CONTRACTOR TO EXTEND OVERGROWTH REMOVAL OPERATIONS BEYOND THE LIMITS SHOWN.
5. FOUNDATION PILES NOT SHOWN.

CONCRETE REMOVAL PLAN

SCALE: 3/8" = 1'-0"

ALTERED ON:	AFFIXED ON: 6-21-16
SIGNATURE: STAMP:	SIGNATURE: STAMP: STATE OF NEW YORK F. DAVID HUDDA 061048 LICENSED PROFESSIONAL ENGINEER

IT IS A VIOLATION OF LAW FOR ANY PERSON, UNLESS THEY ARE ACTING UNDER THE DIRECTION OF A LICENSED PROFESSIONAL ENGINEER, ARCHITECT, LANDSCAPE ARCHITECT, OR LAND SURVEYOR, TO ALTER AN ITEM IN ANY WAY. IF AN ITEM BEARING THE STAMP OF A LICENSED PROFESSIONAL IS ALTERED, THE ALTERING ENGINEER, ARCHITECT, LANDSCAPE ARCHITECT, OR LAND SURVEYOR SHALL STAMP THE DOCUMENT AND INCLUDE THE NOTATION "ALTERED BY" FOLLOWED BY THEIR SIGNATURE. THE DATE OF SUCH ALTERATION, AND A SPECIFIC DESCRIPTION OF THE ALTERATION.

REVISIONS

DATE	DESCRIPTION	BY	SYM.

NEW YORK STATE THRUWAY AUTHORITY
DEPARTMENT OF ENGINEERING
200 SOUTHERN BLVD., ALBANY, N.Y. 12209

TITLE OF PROJECT: LOCK E-32 BYPASS CULVERT REPAIR
LOCATION OF PROJECT: TOWN OF PITTSFORD, MONROE COUNTY
TITLE OF DRAWING: CONCRETE REMOVAL DETAILS XI

CONTRACT NUMBER: TAB 16-26C
DATE: 6/14/16
DRAWING NUMBER: CR-11

2016/B94058/Design/Plans/INLET CONCRETE REPAIRS.dgn
CHECKED BY: D. HUDDA
DRAFTED BY: J.S. LeBLANC
DESIGNED BY: J.S. LeBLANC
CHECKED BY: D. HUDDA
DESIGN SUPERVISOR: R. KARIS

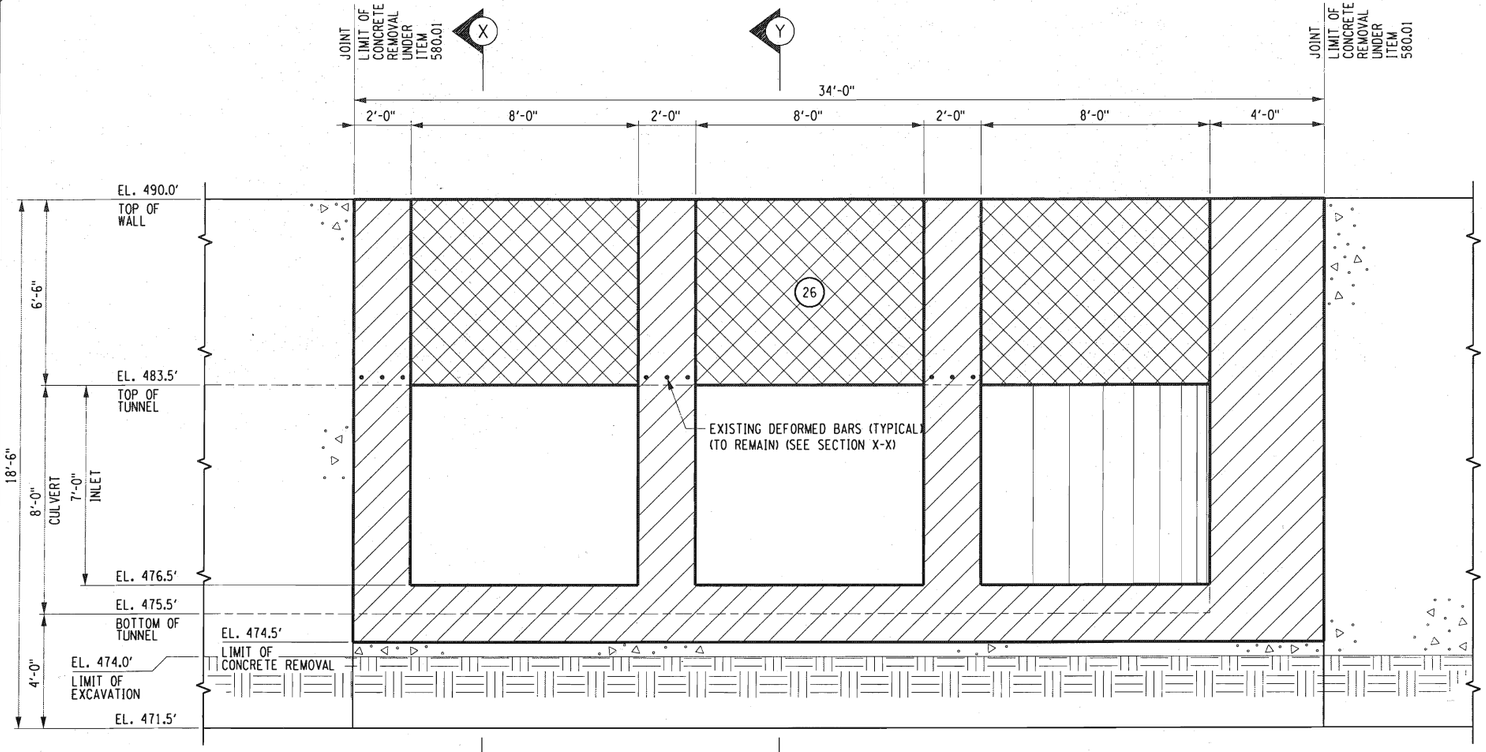

CONCRETE REMOVAL ELEVATION
SCALE: 3/8" = 1'-0"

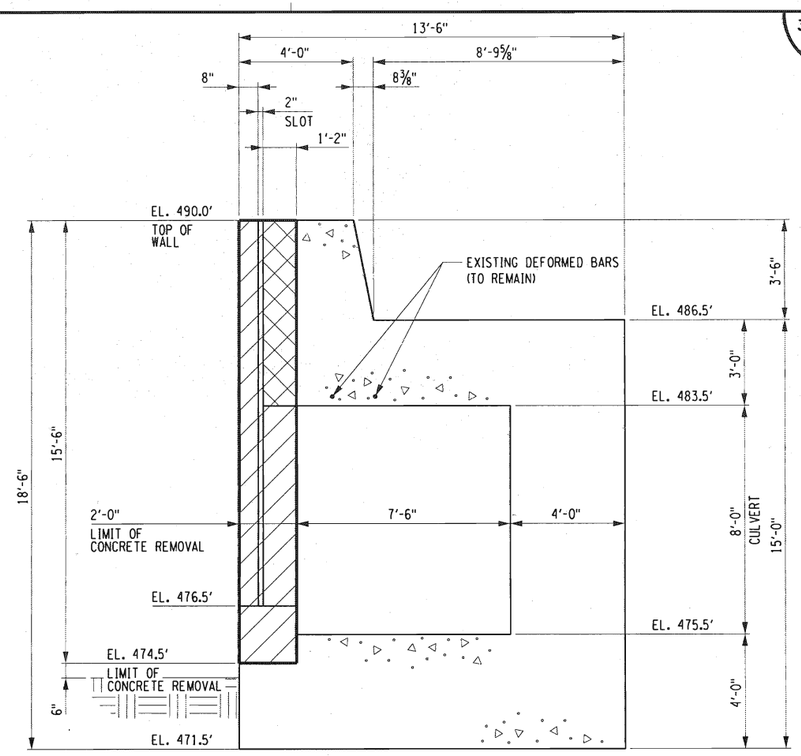

SECTION Y-Y
(TYPICAL SECTION BETWEEN POSTS)
SCALE: 3/8" = 1'-0"

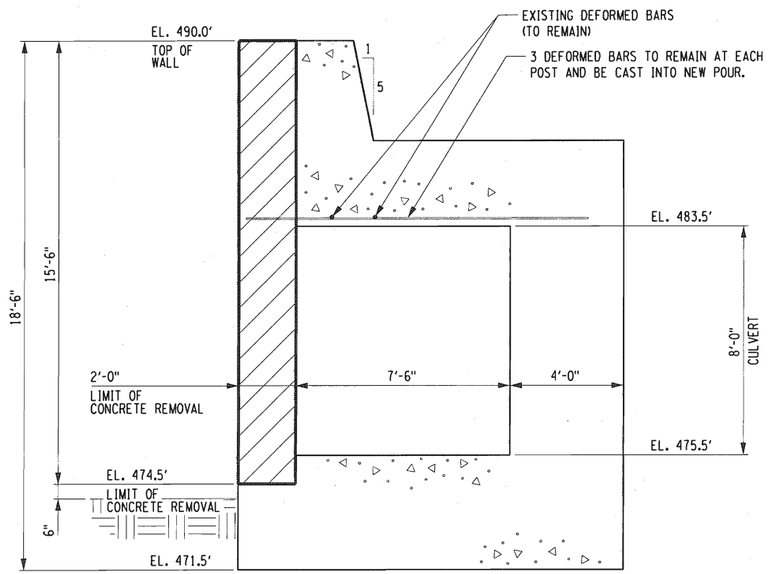

SECTION X-X
(TYPICAL SECTION AT POSTS)
SCALE: 3/8" = 1'-0"

LEGEND

SYMBOL	DESCRIPTION
	STRUCTURAL CONCRETE REMOVAL FOR RECONSTRUCTION OF INLET UNDER ITEM 580.01
	STRUCTURAL CONCRETE REMOVAL TO SPECIFIED DEPTH FOR RESURFACING OF RECESSED FACE UNDER ITEM 580.01
	EXISTING CONCRETE (TO REMAIN)
	EXISTING GRADE (TO REMAIN)

NOTES:

1. THESE DETAILS WERE PRODUCED USING RECORD PLANS. THE CONTRACTOR SHALL VERIFY FIELD ELEVATIONS AND DIMENSIONS BEFORE PROCEDING WITH DEMOLITION WORK.
2. LEAVE SURFACE OF CONCRETE IN REMOVAL AREAS UNFINISHED TO ASSIST BONDING WITH NEW POURS.
3. CONCRETE REPLACEMENT AREAS (POUR NUMBERS) ARE INDICATED FOR REFERENCE THUSLY "(#)".
4. FOUNDATION PILES NOT SHOWN.

ALTERED ON:	AFFIXED ON: 6-21-16
SIGNATURE: STAMP:	SIGNATURE: STAMP: STATE OF NEW YORK F. DAVID HUDDA 061048 LICENSED PROFESSIONAL ENGINEER

IT IS A VIOLATION OF LAW FOR ANY PERSON, UNLESS THEY ARE ACTING UNDER THE DIRECTION OF A LICENSED PROFESSIONAL ENGINEER, ARCHITECT, LANDSCAPE ARCHITECT, OR LAND SURVEYOR, TO ALTER AN ITEM IN ANY WAY. IF AN ITEM BEARING THE STAMP OF A LICENSED PROFESSIONAL IS ALTERED, THE ALTERING ENGINEER, ARCHITECT, LANDSCAPE ARCHITECT, OR LAND SURVEYOR SHALL STAMP THE DOCUMENT AND INCLUDE THE NOTATION "ALTERED BY" FOLLOWED BY THEIR SIGNATURE. THE DATE OF SUCH ALTERATION, AND A SPECIFIC DESCRIPTION OF THE ALTERATION.

REVISIONS

DATE	DESCRIPTION	BY	SYM.

NEW YORK STATE THRUWAY AUTHORITY
DEPARTMENT OF ENGINEERING
200 SOUTHERN BLVD., ALBANY, N.Y. 12209

TITLE OF PROJECT: LOCK E-32 BYPASS CULVERT REPAIR
LOCATION OF PROJECT: TOWN OF PITTSFORD MONROE COUNTY
TITLE OF DRAWING: CONCRETE REMOVAL DETAILS XI

CONTRACT NUMBER: TAB 16-26C
DATE: 6/14/16
DRAWING NUMBER: CR-12

2016/B94058/Design/Plans/APPROACH WALL RESURFACING.dgn
DRAFTED BY: J.S. LeBLANC
CHECKED BY: D. HUDDA
DESIGNED BY: J.S. LeBLANC
CHECKED BY: D. HUDDA
DESIGN SUPERVISOR: R. KARIS

LEGEND

SYMBOL	DESCRIPTION
	NEW STRUCTURAL CONCRETE UNDER ITEM 555.0105
	BACKFILL WITH SUITABLE EXCAVATED MATERIAL UNDER ITEM 206.01
	EXISTING CONCRETE (TO REMAIN)
	EXISTING GRADE (TO REMAIN)

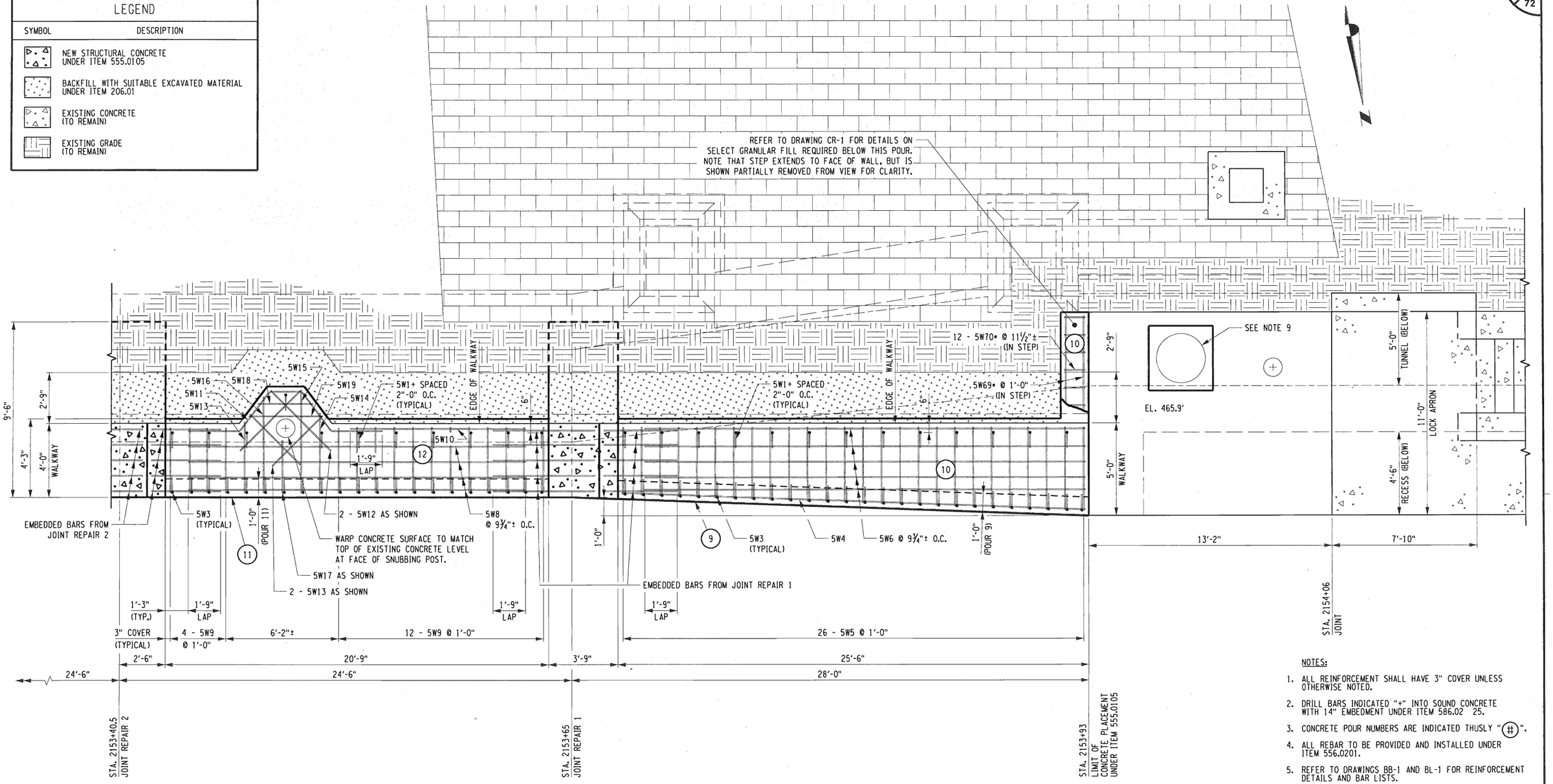

CONCRETE REPLACEMENT PLAN

SCALE: ⅜" = 1'-0"

NOTES:

1. ALL REINFORCEMENT SHALL HAVE 3" COVER UNLESS OTHERWISE NOTED.
2. DRILL BARS INDICATED "+" INTO SOUND CONCRETE WITH 14" EMBEDMENT UNDER ITEM 586.02 25.
3. CONCRETE POUR NUMBERS ARE INDICATED THUSLY "(#)".
4. ALL REBAR TO BE PROVIDED AND INSTALLED UNDER ITEM 556.0201.
5. REFER TO DRAWINGS BB-1 AND BL-1 FOR REINFORCEMENT DETAILS AND BAR LISTS.
6. REFER TO DRAWINGS CP-3 AND CP-4 FOR REINFORCEMENT AND CONCRETE PLACEMENT AT JOINT REPAIRS 1 AND 2. JOINT REPAIRS ARE COMPLETED BEFORE RESURFACING OF WALKWAY AND APPROACH WALL FACE.
7. TOP OF FINISHED WALKWAY CONCRETE IS 464.9'.
8. REFER TO DRAWING CP-5 FOR POUR TABLE.
9. MANHOLE TO BE ABANDONED AND PLUGGED WITH CONCRETE. SEE DETAILS ON DRAWING MA-1.
10. "•" INDICATES BAR MARK IS OUT OF SEQUENCE.

ALTERED ON:	AFFIXED ON: 6-22-16
SIGNATURE: STAMP:	SIGNATURE: STAMP: STATE OF NEW YORK · F. DAVID HUDDA · 061048 · LICENSED PROFESSIONAL ENGINEER

IT IS A VIOLATION OF LAW FOR ANY PERSON, UNLESS THEY ARE ACTING UNDER THE DIRECTION OF A LICENSED PROFESSIONAL ENGINEER, ARCHITECT, LANDSCAPE ARCHITECT, OR LAND SURVEYOR, TO ALTER AN ITEM IN ANY WAY. IF AN ITEM BEARING THE STAMP OF A LICENSED PROFESSIONAL IS ALTERED, THE ALTERING ENGINEER, ARCHITECT, LANDSCAPE ARCHITECT, OR LAND SURVEYOR SHALL STAMP THE DOCUMENT AND INCLUDE THE NOTATION "ALTERED BY" FOLLOWED BY THEIR SIGNATURE. THE DATE OF SUCH ALTERATION, AND A SPECIFIC DESCRIPTION OF THE ALTERATION.

REVISIONS

DATE	DESCRIPTION	BY	SYM.

NEW YORK STATE THRUWAY AUTHORITY
DEPARTMENT OF ENGINEERING
200 SOUTHERN BLVD., ALBANY, N.Y. 12209

TITLE OF PROJECT: LOCK E-32 BYPASS CULVERT REPAIR
LOCATION OF PROJECT: TOWN OF PITTSFORD MONROE COUNTY
TITLE OF DRAWING: CONCRETE AND REINFORCEMENT PLACEMENT DETAILS I

CONTRACT NUMBER: TAB 16-26C
DATE: 6/14/16
DRAWING NUMBER: CP-1

2016/B94058/Design/Plans/APPROACH WALL RESURFACING.dgn
DRAFTED BY: J.S. LeBLANC
DESIGNED BY: J.S. LeBLANC
CHECKED BY: D. HUDDA
CHECKED BY: D. HUDDA
DESIGN SUPERVISOR: R. KARIS

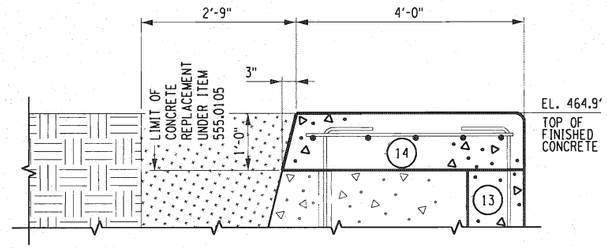

SECTION A-A
TYPICAL PLACEMENT
SCALE: 3/4" = 1'-0"

LEGEND	
SYMBOL	DESCRIPTION
	NEW STRUCTURAL CONCRETE UNDER ITEM 555.0105
	BACKFILL WITH SUITABLE EXCAVATED MATERIAL UNDER ITEM 206.01
	EXISTING CONCRETE (TO REMAIN)
	EXISTING GRADE (TO REMAIN)

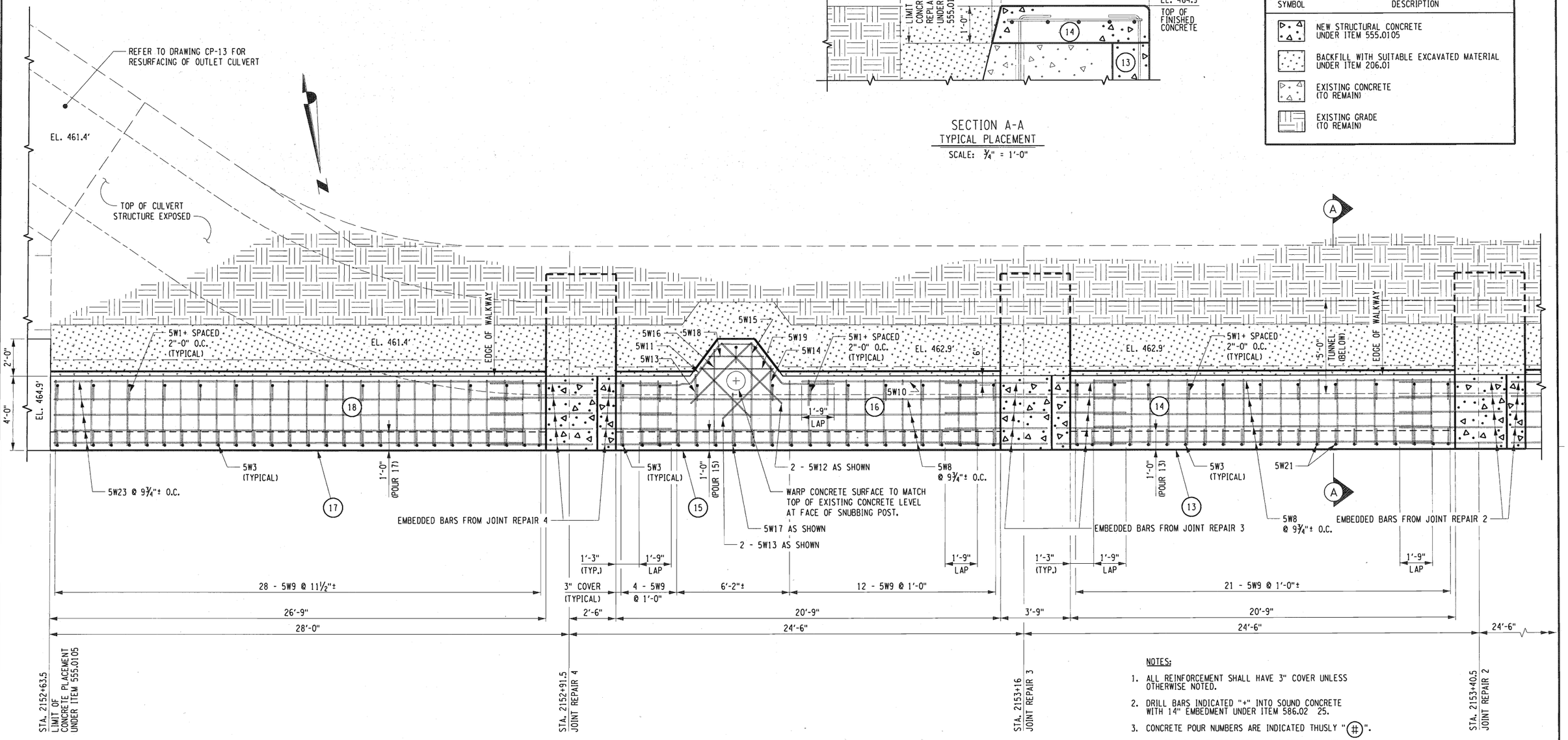

CONCRETE REPLACEMENT PLAN
SCALE: 3/8" = 1'-0"

NOTES:

1. ALL REINFORCEMENT SHALL HAVE 3" COVER UNLESS OTHERWISE NOTED.
2. DRILL BARS INDICATED "+" INTO SOUND CONCRETE WITH 14" EMBEDMENT UNDER ITEM 586.02 25.
3. CONCRETE POUR NUMBERS ARE INDICATED THUSLY "(#)".
4. ALL REBAR TO BE PROVIDED AND INSTALLED UNDER ITEM 556.0201.
5. REFER TO DRAWINGS BB-1 AND BL-1 FOR REINFORCEMENT DETAILS AND BAR LISTS.
6. REFER TO DRAWINGS CP-3 AND CP-4 FOR REINFORCEMENT AND CONCRETE PLACEMENT AT JOINT REPAIRS 2, 3, AND 4. JOINT REPAIRS ARE COMPLETED BEFORE RESURFACING OF WALKWAY AND APPROACH WALL FACE.
7. TOP OF FINISHED WALKWAY CONCRETE IS 464.9'.
8. REFER TO DRAWING CP-5 FOR POUR TABLE.

ALTERED ON:	AFFIXED ON: 6-21-16
SIGNATURE: STAMP:	SIGNATURE: STAMP: STATE OF NEW YORK F. DAVID HUDDA 061048 LICENSED PROFESSIONAL ENGINEER

IT IS A VIOLATION OF LAW FOR ANY PERSON, UNLESS THEY ARE ACTING UNDER THE DIRECTION OF A LICENSED PROFESSIONAL ENGINEER, ARCHITECT, LANDSCAPE ARCHITECT, OR LAND SURVEYOR, TO ALTER AN ITEM IN ANY WAY. IF AN ITEM BEARING THE STAMP OF A LICENSED PROFESSIONAL IS ALTERED, THE ALTERING ENGINEER, ARCHITECT, LANDSCAPE ARCHITECT, OR LAND SURVEYOR SHALL STAMP THE DOCUMENT AND INCLUDE THE NOTATION "ALTERED BY" FOLLOWED BY THEIR SIGNATURE. THE DATE OF SUCH ALTERATION, AND A SPECIFIC DESCRIPTION OF THE ALTERATION.

REVISIONS

DATE	DESCRIPTION	BY	SYM.

NEW YORK STATE THRUWAY AUTHORITY
DEPARTMENT OF ENGINEERING
200 SOUTHERN BLVD., ALBANY, N.Y. 12209

TITLE OF PROJECT: LOCK E-32 BYPASS CULVERT REPAIR
LOCATION OF PROJECT: TOWN OF PITTSFORD MONROE COUNTY
TITLE OF DRAWING: CONCRETE AND REINFORCEMENT PLACEMENT DETAILS II

CONTRACT NUMBER: TAB 16-26C
DATE: 6/14/16
DRAWING NUMBER: CP-2

2016/B94058/Design/Plans/APPROACH WALL JOINT REPAIRS.dgn
DRAFTED BY: J.S. LeBLANC
CHECKED BY: D. HUDDA
DESIGNED BY: J.S. LeBLANC
CHECKED BY: D. HUDDA
DESIGN SUPERVISOR: R. KARIS

NOTES:

1. ALL REINFORCEMENT SHALL HAVE 3" COVER UNLESS OTHERWISE NOTED.
2. DRILL BARS INDICATED "+" INTO SOUND CONCRETE WITH 14" EMBEDMENT UNDER ITEM 586.02 25.
3. CONCRETE POUR NUMBERS ARE INDICATED THUSLY "(#)".
4. ALL REBAR TO BE PROVIDED AND INSTALLED UNDER ITEM 556.0201.
5. REFER TO DRAWINGS BB-1 AND BL-1 FOR REINFORCEMENT DETAILS AND BAR LISTS.
6. WORK THIS DRAWING WITH DRAWING CR-4.
7. PLACE PATCHING MATERIAL IN BRICK VOIDS CREATED DURING CONCRETE REMOVAL AND PLACEMENT ACTIVITIES. REFER TO DRAWING CG-1 FOR BRICK VOID REPAIR DETAIL. ALSO SEE BRICK LINING REPAIR NOTES ON DRAWING GN-1.
8. REFER TO DRAWING CP-5 FOR POUR TABLE.
9. REFER TO DRAWING CP-4 FOR SECTION A'-A'.

LEGEND

SYMBOL	DESCRIPTION
	NEW STRUCTURAL CONCRETE UNDER ITEM 555.0105
	BACKFILL WITH SUITABLE EXCAVATED MATERIAL UNDER ITEM 206.01
	EXISTING CONCRETE (TO REMAIN)
	EXISTING GRADE (TO REMAIN)

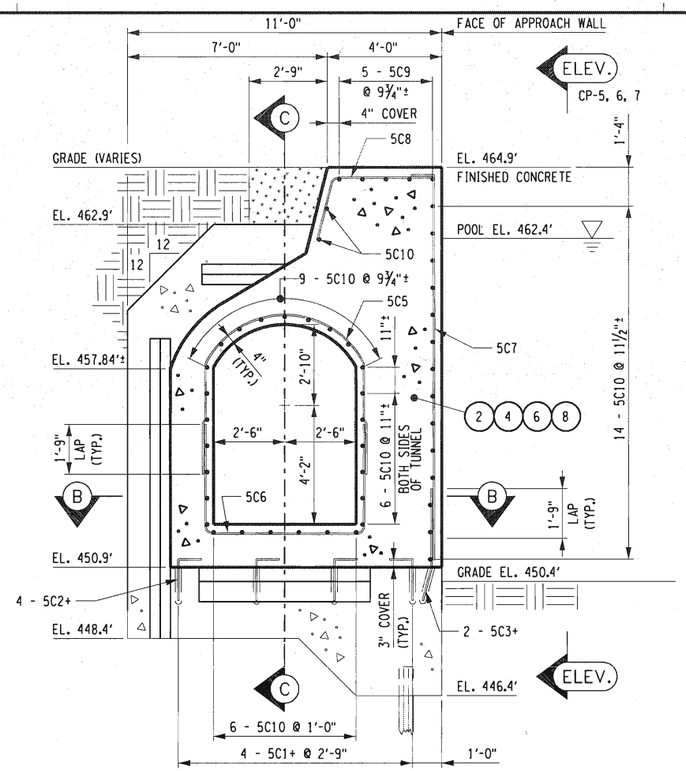

SECTION A-A
SCALE: ⅜" = 1'-0"

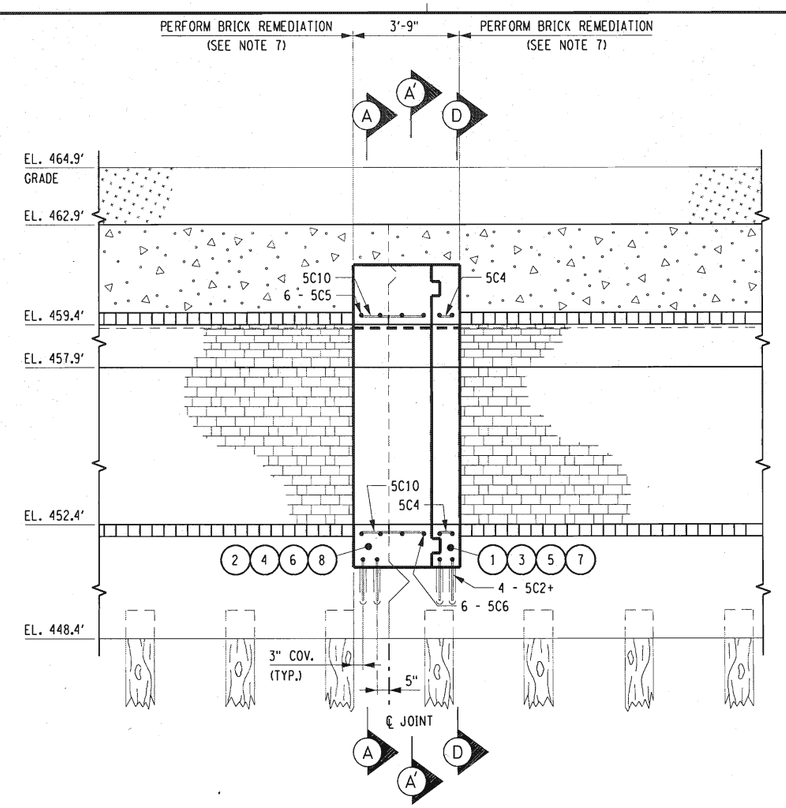

SECTION C-C
REPLACEMENT SECTION AT CENTERLINE OF CULVERT
SCALE: ⅜" = 1'-0"

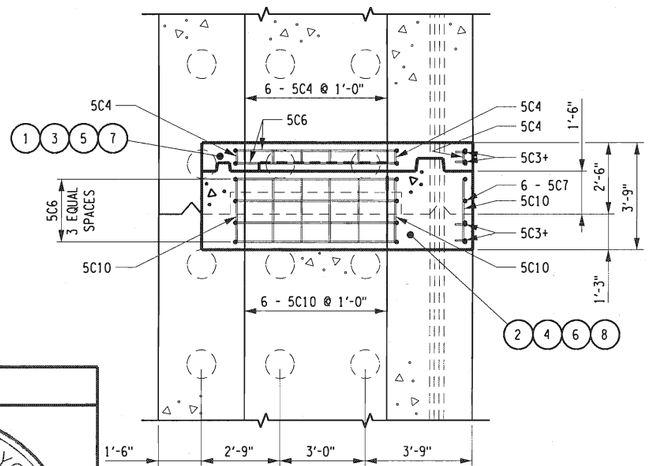

SECTION B-B
SCALE: ⅜" = 1'-0"

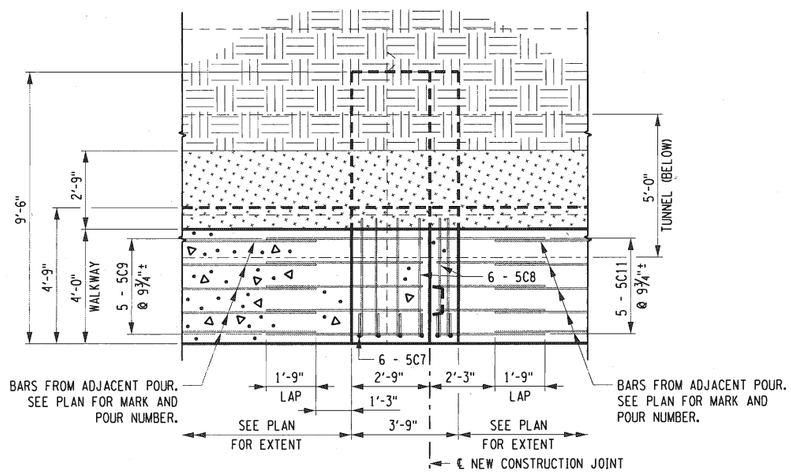

TYPICAL REPLACEMENT PLAN
SCALE: ⅜" = 1'-0"

ALTERED ON:	AFFIXED ON: 6-21-16
SIGNATURE: STAMP:	SIGNATURE: STAMP: STATE OF NEW YORK · F. DAVID HUDDA · 061048 · LICENSED PROFESSIONAL ENGINEER

IT IS A VIOLATION OF LAW FOR ANY PERSON, UNLESS THEY ARE ACTING UNDER THE DIRECTION OF A LICENSED PROFESSIONAL ENGINEER, ARCHITECT, LANDSCAPE ARCHITECT, OR LAND SURVEYOR, TO ALTER AN ITEM IN ANY WAY. IF AN ITEM BEARING THE STAMP OF A LICENSED PROFESSIONAL IS ALTERED, THE ALTERING ENGINEER, ARCHITECT, LANDSCAPE ARCHITECT, OR LAND SURVEYOR SHALL STAMP THE DOCUMENT AND INCLUDE THE NOTATION "ALTERED BY" FOLLOWED BY THEIR SIGNATURE, THE DATE OF SUCH ALTERATION, AND A SPECIFIC DESCRIPTION OF THE ALTERATION.

REVISIONS

DATE	DESCRIPTION	BY	SYM.

NEW YORK STATE THRUWAY AUTHORITY
DEPARTMENT OF ENGINEERING
200 SOUTHERN BLVD., ALBANY, N.Y. 12209

TITLE OF PROJECT: LOCK E-32 BYPASS CULVERT REPAIR
LOCATION OF PROJECT: TOWN OF PITTSFORD MONROE COUNTY
TITLE OF DRAWING: CONCRETE AND REINFORCEMENT PLACEMENT DETAILS III

CONTRACT NUMBER: TAB 16-26C
DATE: 6/14/16
DRAWING NUMBER: CP-3

2016/894058/Despp/Plans/APPROACH WALL JOINT REPAIRS.dgn
DRAFTED BY: J.S. LeBLANC
CHECKED BY: D. HUDDA
DESIGNED BY: J.S. LeBLANC
CHECKED BY: D. HUDDA
DESIGN SUPERVISOR: R. KARIS

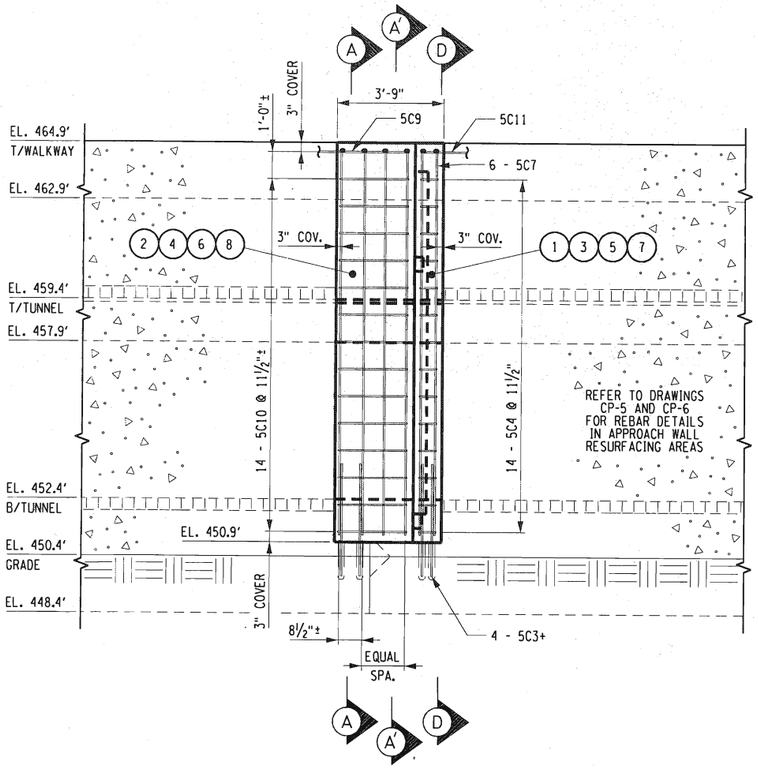

ELEVATION
FACE OF APPROACH WALL AT JOINT
SCALE: ⅜" = 1'-0"

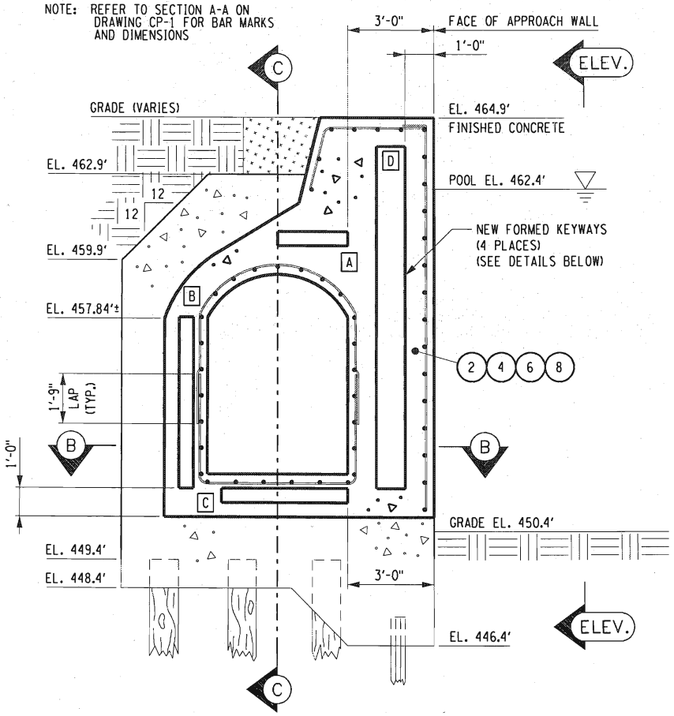

SECTION A'-A'
REPLACEMENT SECTION AT CENTERLINE OF OFFSET JOINT
SCALE: ⅜" = 1'-0"

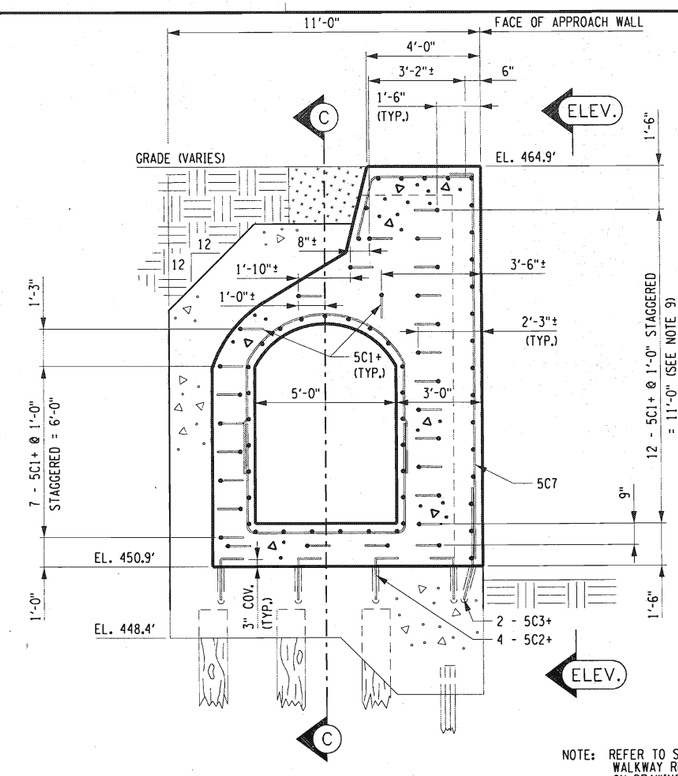

SECTION D-D
REPLACEMENT SECTION AT EXISTING CONCRETE FACES
SCALE: ⅜" = 1'-0"

NOTE: REFER TO SECTION A-A AND WALKWAY REPLACEMENT DETAILS ON DRAWINGS CP-1 AND CP-2 FOR BAR MARKS AND DIMENSIONS NOT SHOWN.

NOTES:

1. ALL REINFORCEMENT SHALL HAVE 3" COVER UNLESS OTHERWISE NOTED.
2. DRILL BARS INDICATED "+" INTO SOUND CONCRETE WITH 14" EMBEDMENT UNDER ITEM 586.02 25.
3. CONCRETE POUR NUMBERS ARE INDICATED THUSLY "(#)".
4. ALL REBAR TO BE PROVIDED AND INSTALLED UNDER ITEM 556.0201.
5. REFER TO DRAWINGS BB-1 AND BL-1 FOR REINFORCEMENT DETAILS AND BAR LISTS.
6. TIE BARS LAYOUT SHOWN IN SECTION D-D IS TO BE USED AT ALL LOCATIONS WHERE NEW CONCRETE IS POURED AGAINST THE EXISTING APPROACH WALL/TUNNEL CONCRETE.
7. WORK THIS DRAWING WITH DRAWING CP-3.
8. REFER TO DRAWING CP-5 FOR POUR TABLE.
9. DRILL GROUT HOLES FOR BAR 5C1 WITH A 15 DEGREE DOWNSLOPE TO RETAIN GROUT.

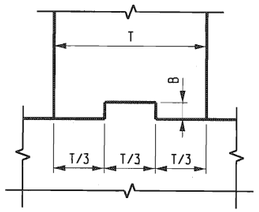

HORIZONTAL

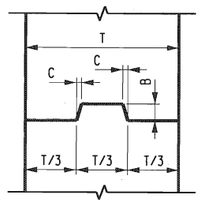

VERTICAL

TABLE OF CONSTRUCTION JOINT KEYWAYS

KEYWAY	DIMENSION T/3	DIMENSION B	DIMENSION C	TOTAL LENGTH
A	6"	3½"	½"	2'-6"
B	6"	3½"	½"	6'-0"
C	6"	3½"	½"	4'-6"
D	1'-0"	5½"	¾"	12'-0"

LEGEND

SYMBOL	DESCRIPTION
	NEW STRUCTURAL CONCRETE UNDER ITEM 555.0105
	BACKFILL WITH SUITABLE EXCAVATED MATERIAL UNDER ITEM 206.01
	EXISTING CONCRETE (TO REMAIN)
	EXISTING GRADE (TO REMAIN)

ALTERED ON:

AFFIXED ON: 6-21-16

SIGNATURE:
STAMP:

SIGNATURE:
STAMP:

STATE OF NEW YORK
F. DAVID HUDDA
061048
LICENSED PROFESSIONAL ENGINEER

IT IS A VIOLATION OF LAW FOR ANY PERSON, UNLESS THEY ARE ACTING UNDER THE DIRECTION OF A LICENSED PROFESSIONAL ENGINEER, ARCHITECT, LANDSCAPE ARCHITECT, OR LAND SURVEYOR, TO ALTER AN ITEM IN ANY WAY. IF AN ITEM BEARING THE STAMP OF A LICENSED PROFESSIONAL IS ALTERED, THE ALTERING ENGINEER, ARCHITECT, LANDSCAPE ARCHITECT, OR LAND SURVEYOR SHALL STAMP THE DOCUMENT AND INCLUDE THE NOTATION "ALTERED BY" FOLLOWED BY THEIR SIGNATURE. THE DATE OF SUCH ALTERATION, AND A SPECIFIC DESCRIPTION OF THE ALTERATION.

REVISIONS

DATE	DESCRIPTION	BY	SYM.

NEW YORK STATE THRUWAY AUTHORITY
DEPARTMENT OF ENGINEERING
200 SOUTHERN BLVD., ALBANY, N.Y. 12209

TITLE OF PROJECT: LOCK E-32 BYPASS CULVERT REPAIR
LOCATION OF PROJECT: TOWN OF PITTSFORD MONROE COUNTY
TITLE OF DRAWING: CONCRETE AND REINFORCEMENT PLACEMENT DETAILS IV

CONTRACT NUMBER: TAB 16-26C
DATE: 6/14/16
DRAWING NUMBER: CP-4

2016/TB94058/Design/Plans/APPROACH WALL RESURFACING.dgn
DRAFTED BY: J.S. LeBLANC
CHECKED BY: D. HUDDA
DESIGNED BY: J.S. LeBLANC
CHECKED BY: D. HUDDA
DESIGN SUPERVISOR: R. KARIS

LEGEND	
SYMBOL	DESCRIPTION
	NEW STRUCTURAL CONCRETE UNDER ITEM 555.0105
	EXISTING CONCRETE (TO REMAIN)
	EXISTING GRADE (TO REMAIN)

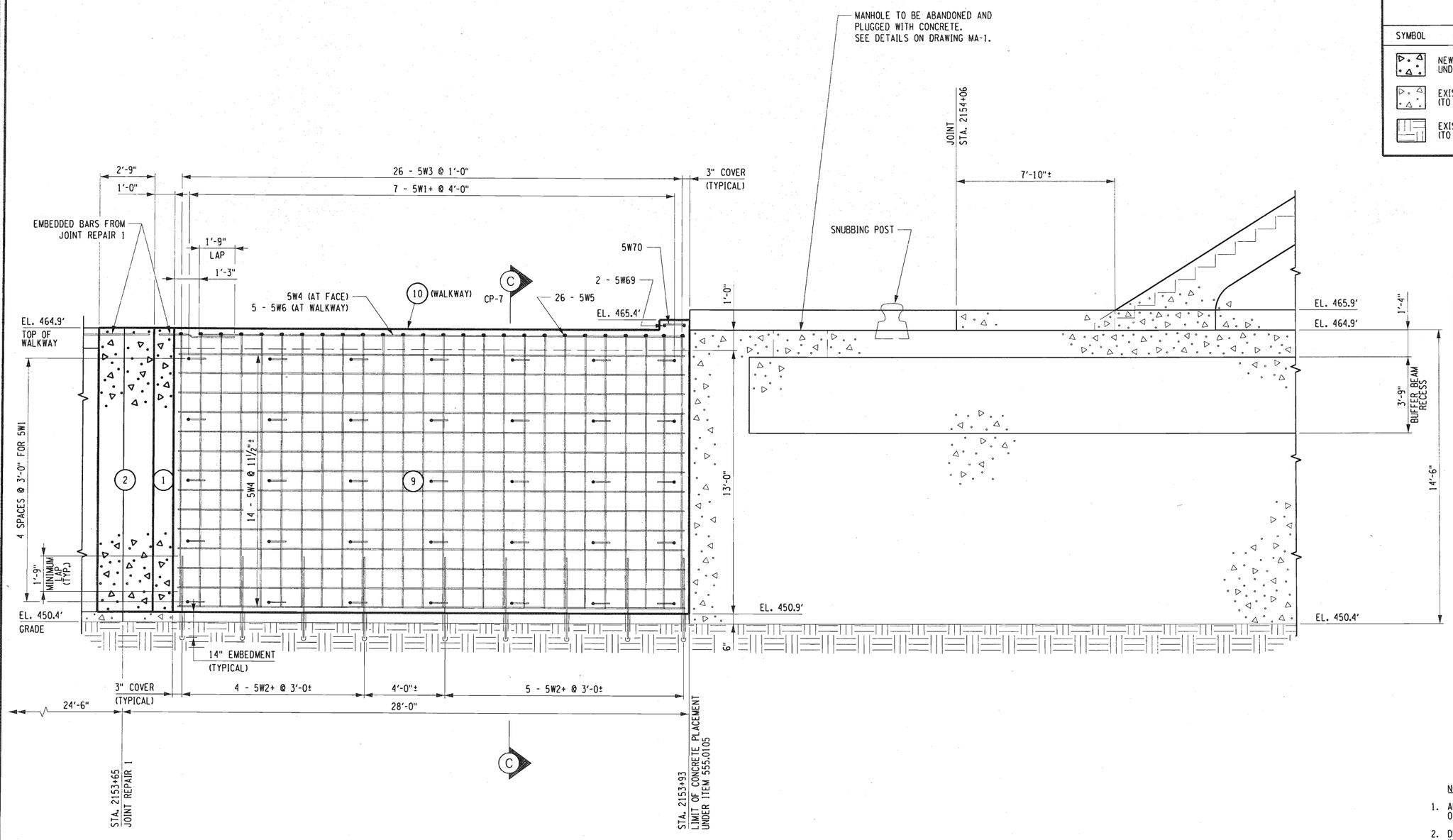

CONCRETE REPLACEMENT ELEVATION

SCALE: 3/8" = 1'-0"

CONCRETE POUR TABLE

POUR NUMBER	ESTIMATE ITEM 555.0105 (CUBIC YARDS)	FINAL
1	2.87	
2	7.89	
3	2.87	
4	7.89	
5	2.87	
6	7.89	
7	2.87	
8	7.89	
9	12.29	
10	4.78	
11	9.99	
12	3.59	
13	8.31	
14	3.12	
15	9.99	
16	3.59	
17	12.88	
18	4.09	
19	5.44	
20	15.43	
21	25.51	
22	27.40	
23	6.87	
24	5.08	
25	12.04	
26	21.81	
27	1.91	
28	3.00	
TOTAL	240.16	

NOTES:

1. ALL REINFORCEMENT SHALL HAVE 3" COVER UNLESS OTHERWISE NOTED.
2. DRILL BARS INDICATED "+" INTO SOUND CONCRETE WITH 14" EMBEDMENT UNDER ITEM 586.02 25.
3. CONCRETE POUR NUMBERS ARE INDICATED THUSLY "(#)".
4. ALL REBAR TO BE PROVIDED AND INSTALLED UNDER ITEM 556.0201.
5. REFER TO DRAWINGS BB-1 AND BL-1 FOR REINFORCEMENT DETAILS AND BAR LISTS.
6. REFER TO DRAWINGS CP-3 AND CP-4 FOR REINFORCEMENT AND CONCRETE PLACEMENT AT JOINT REPAIRS. JOINT REPAIRS ARE COMPLETED BEFORE RESURFACING OF WALKWAY AND APPROACH WALL FACE.

ALTERED ON:	AFFIXED ON: 6-22-16
SIGNATURE: STAMP:	SIGNATURE: STAMP: STATE OF NEW YORK · F. DAVID HUDDA · 061048 · LICENSED PROFESSIONAL ENGINEER

IT IS A VIOLATION OF LAW FOR ANY PERSON, UNLESS THEY ARE ACTING UNDER THE DIRECTION OF A LICENSED PROFESSIONAL ENGINEER, ARCHITECT, LANDSCAPE ARCHITECT, OR LAND SURVEYOR, TO ALTER AN ITEM IN ANY WAY. IF AN ITEM BEARING THE STAMP OF A LICENSED PROFESSIONAL IS ALTERED, THE ALTERING ENGINEER, ARCHITECT, LANDSCAPE ARCHITECT, OR LAND SURVEYOR SHALL STAMP THE DOCUMENT AND INCLUDE THE NOTATION "ALTERED BY" FOLLOWED BY THEIR SIGNATURE. THE DATE OF SUCH ALTERATION, AND A SPECIFIC DESCRIPTION OF THE ALTERATION.

REVISIONS			
DATE	DESCRIPTION	BY	SYM.

NEW YORK STATE THRUWAY AUTHORITY
DEPARTMENT OF ENGINEERING
200 SOUTHERN BLVD., ALBANY, N.Y. 12209

TITLE OF PROJECT: LOCK E-32 BYPASS CULVERT REPAIR
LOCATION OF PROJECT: TOWN OF PITTSFORD MONROE COUNTY
TITLE OF DRAWING: CONCRETE AND REINFORCEMENT PLACEMENT DETAILS V

CONTRACT NUMBER: TAB 16-26C
DATE: 6/14/16
DRAWING NUMBER: CP-5

2016/894058/Design/Plans/APPROACH WALL RESURFACING.dgn
DRAFTED BY: J.S. LeBLANC
CHECKED BY: D. HUDDA
DESIGNED BY: J.S. LeBLANC
CHECKED BY: D. HUDDA
DESIGN SUPERVISOR: R. KARIS

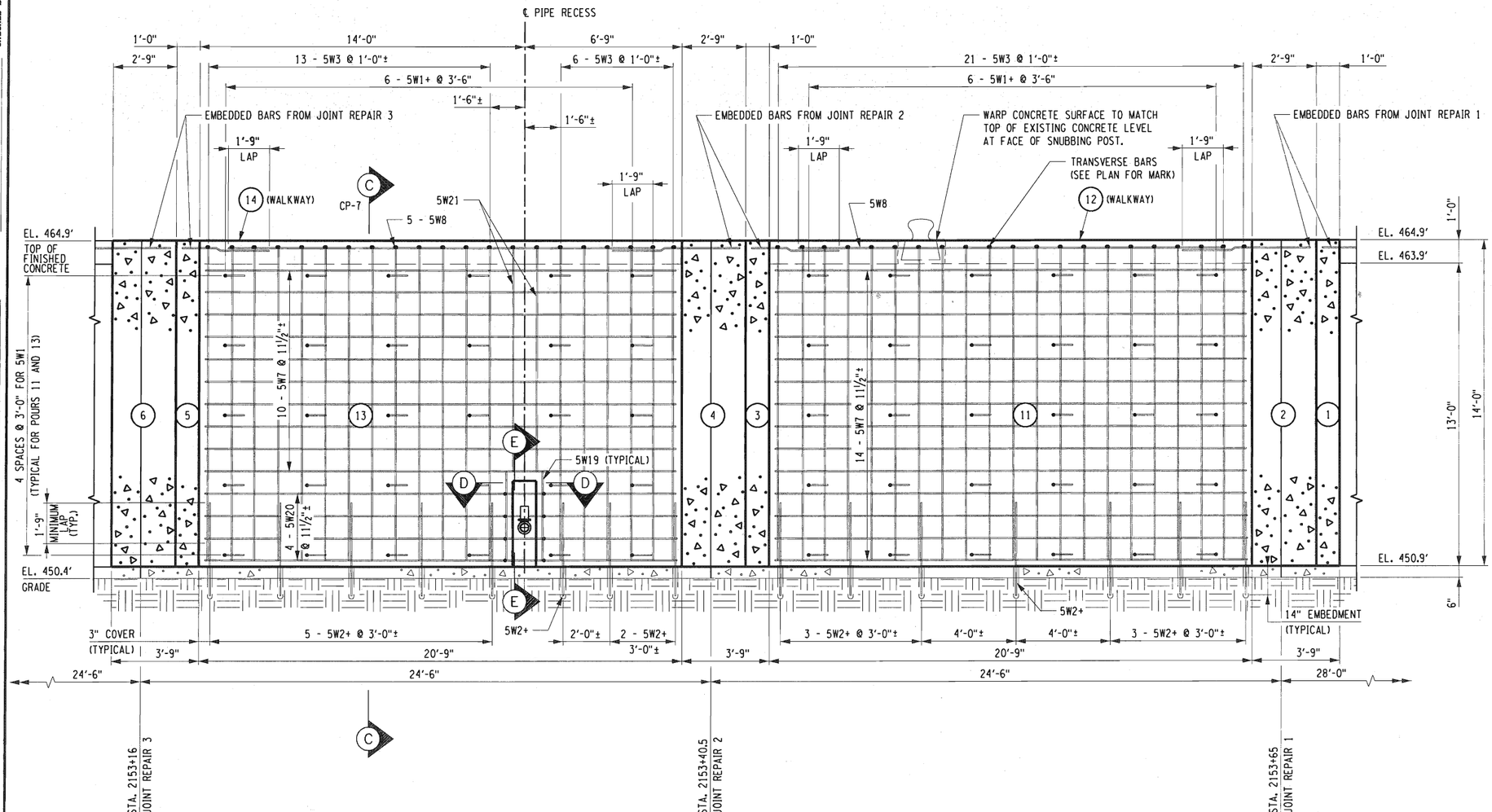

CONCRETE REPLACEMENT ELEVATION

SCALE: ⅜" = 1'-0"

LEGEND

SYMBOL	DESCRIPTION
	NEW STRUCTURAL CONCRETE UNDER ITEM 555.0105
	EXISTING CONCRETE (TO REMAIN)
	EXISTING GRADE (TO REMAIN)

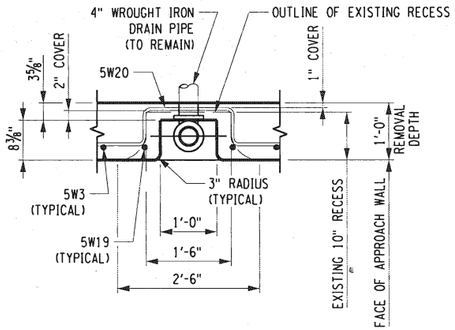

SECTION D-D

SCALE: ¾" = 1'-0"

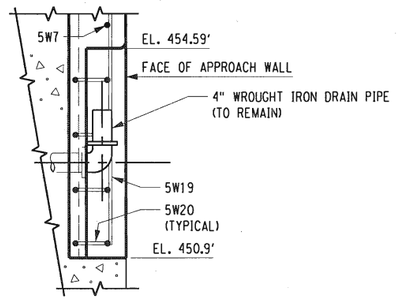

SECTION E-E

SCALE: ¾" = 1'-0"

NOTES:

1. ALL REINFORCEMENT SHALL HAVE 3" COVER UNLESS OTHERWISE NOTED.
2. DRILL BARS INDICATED "+" INTO SOUND CONCRETE WITH 14" EMBEDMENT UNDER ITEM 586.02 25.
3. CONCRETE POUR NUMBERS ARE INDICATED THUSLY "(#)".
4. ALL REBAR TO BE PROVIDED AND INSTALLED UNDER ITEM 556.0201.
5. REFER TO DRAWINGS BB-1 AND BL-1 FOR REINFORCEMENT DETAILS AND BAR LISTS.
6. REFER TO DRAWINGS CP-3 AND CP-4 FOR REINFORCEMENT AND CONCRETE PLACEMENT AT JOINT REPAIRS. JOINT REPAIRS ARE COMPLETED BEFORE RESURFACING OF WALKWAY AND APPROACH WALL FACE.
7. REFER TO DRAWING CP-5 FOR POUR TABLE.

ALTERED ON:	AFFIXED ON: 6-21-16
SIGNATURE: STAMP:	SIGNATURE: STAMP: STATE OF NEW YORK · F. DAVID HUDDA · 061048 · LICENSED PROFESSIONAL ENGINEER

IT IS A VIOLATION OF LAW FOR ANY PERSON, UNLESS THEY ARE ACTING UNDER THE DIRECTION OF A LICENSED PROFESSIONAL ENGINEER, ARCHITECT, LANDSCAPE ARCHITECT, OR LAND SURVEYOR, TO ALTER AN ITEM IN ANY WAY. IF AN ITEM BEARING THE STAMP OF A LICENSED PROFESSIONAL IS ALTERED, THE ALTERING ENGINEER, ARCHITECT, LANDSCAPE ARCHITECT, OR LAND SURVEYOR SHALL STAMP THE DOCUMENT AND INCLUDE THE NOTATION "ALTERED BY" FOLLOWED BY THEIR SIGNATURE. THE DATE OF SUCH ALTERATION, AND A SPECIFIC DESCRIPTION OF THE ALTERATION.

REVISIONS

DATE	DESCRIPTION	BY	SYM.

NEW YORK STATE THRUWAY AUTHORITY
DEPARTMENT OF ENGINEERING
200 SOUTHERN BLVD., ALBANY, N.Y. 12209

TITLE OF PROJECT: LOCK E-32 BYPASS CULVERT REPAIR
LOCATION OF PROJECT: TOWN OF PITTSFORD MONROE COUNTY
TITLE OF DRAWING: CONCRETE AND REINFORCEMENT PLACEMENT DETAILS VI

CONTRACT NUMBER: TAB 16-26C
DATE: 6/14/16
DRAWING NUMBER: CP-6

2016/594058/Design/Plans/APPROACH WALL RESURFACING.dgn
CHECKED BY: D. HUDDA
DRAFTED BY: J.S. LeBLANC
DESIGNED BY: J.S. LeBLANC
CHECKED BY: D. HUDDA
DESIGN SUPERVISOR: R. KARIS

LEGEND	
SYMBOL	DESCRIPTION
	NEW STRUCTURAL CONCRETE UNDER ITEM 555.0105
	EXISTING CONCRETE (TO REMAIN)
	EXISTING GRADE (TO REMAIN)

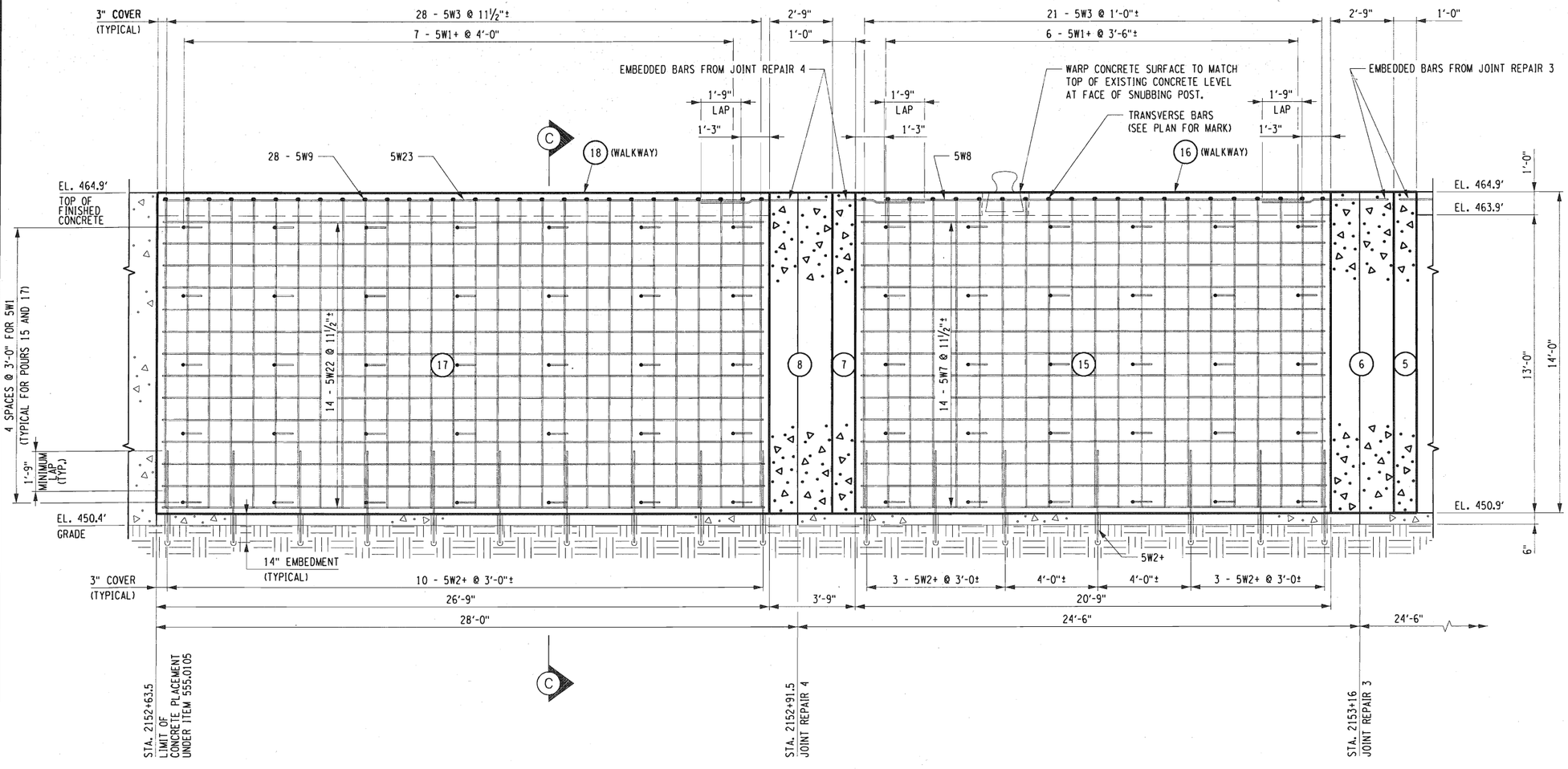

CONCRETE REPLACEMENT ELEVATION
SCALE: ⅜" = 1'-0"

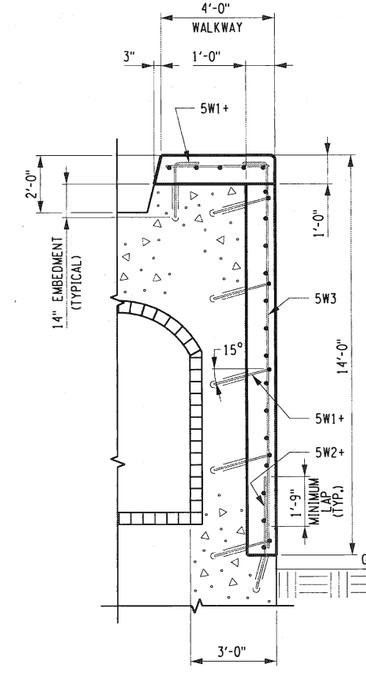

NOTE: TUNNEL LOCATION AS SHOWN BEHIND POURS 11, 13, AND 15.

SECTION C-C
SCALE: ⅜" = 1'-0"

NOTES:

1. ALL REINFORCEMENT SHALL HAVE 3" COVER UNLESS OTHERWISE NOTED.
2. DRILL BARS INDICATED "+" INTO SOUND CONCRETE WITH 14" EMBEDMENT UNDER ITEM 586.02 25.
3. CONCRETE POUR NUMBERS ARE INDICATED THUSLY "(#)".
4. ALL REBAR TO BE PROVIDED AND INSTALLED UNDER ITEM 556.0201.
5. REFER TO DRAWINGS BB-1 AND BL-1 FOR REINFORCEMENT DETAILS AND BAR LISTS.
6. REFER TO DRAWINGS CP-3 AND CP-4 FOR REINFORCEMENT AND CONCRETE PLACEMENT AT JOINT REPAIRS. JOINT REPAIRS ARE COMPLETED BEFORE RESURFACING OF WALKWAY AND APPROACH WALL FACE.
7. REFER TO DRAWING CP-5 FOR POUR TABLE.

ALTERED ON:	AFFIXED ON: 6-22-16
SIGNATURE: STAMP:	SIGNATURE: STAMP: STATE OF NEW YORK · F. DAVID HUDDA · 061048 · LICENSED PROFESSIONAL ENGINEER

IT IS A VIOLATION OF LAW FOR ANY PERSON, UNLESS THEY ARE ACTING UNDER THE DIRECTION OF A LICENSED PROFESSIONAL ENGINEER, ARCHITECT, LANDSCAPE ARCHITECT, OR LAND SURVEYOR, TO ALTER AN ITEM IN ANY WAY. IF AN ITEM BEARING THE STAMP OF A LICENSED PROFESSIONAL IS ALTERED, THE ALTERING ENGINEER, ARCHITECT, LANDSCAPE ARCHITECT, OR LAND SURVEYOR SHALL STAMP THE DOCUMENT AND INCLUDE THE NOTATION "ALTERED BY" FOLLOWED BY THEIR SIGNATURE. THE DATE OF SUCH ALTERATION, AND A SPECIFIC DESCRIPTION OF THE ALTERATION.

REVISIONS

DATE	DESCRIPTION	BY	SYM.

NEW YORK STATE THRUWAY AUTHORITY
DEPARTMENT OF ENGINEERING
200 SOUTHERN BLVD., ALBANY, N.Y. 12209

TITLE OF PROJECT: LOCK E-32 BYPASS CULVERT REPAIR
LOCATION OF PROJECT: TOWN OF PITTSFORD MONROE COUNTY
TITLE OF DRAWING: CONCRETE AND REINFORCEMENT PLACEMENT DETAILS VII

CONTRACT NUMBER: TAB 16-26C
DATE: 6/14/16
DRAWING NUMBER: CP-7

DESIGN SUPERVISOR: R. KARIS
DESIGNED BY: J.S. LeBLANC
DRAFTED BY: J.S. LeBLANC
CHECKED BY: D. HUDDA
CHECKED BY: D. HUDDA

2016\B94058\Design\Plans\PROPOSED BYPASS VALVE.dgn

INSTALL NEW GALVANIZED STEEL GRATING (NOT SHOWN) OVER MACHINE RECESS AT TOP OF VALVE WELL AFTER CONCRETE HAS FULLY CURED, UNDER ITEM 665.2009--12.

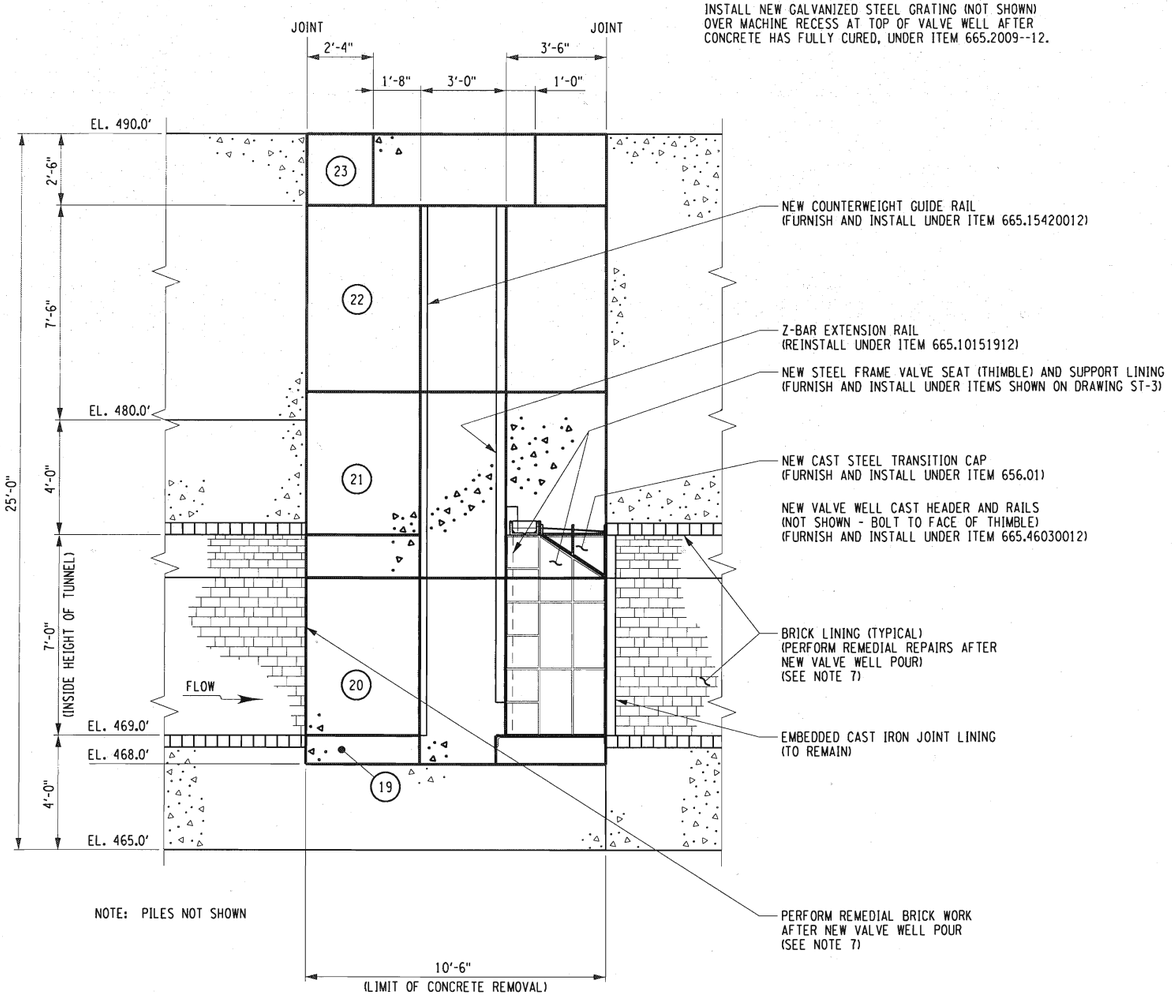

NOTE: PILES NOT SHOWN

BYPASS CULVERT VALVE WELL SECTION AT CENTERLINE OF TUNNEL
SCALE: 3/8" = 1'-0"

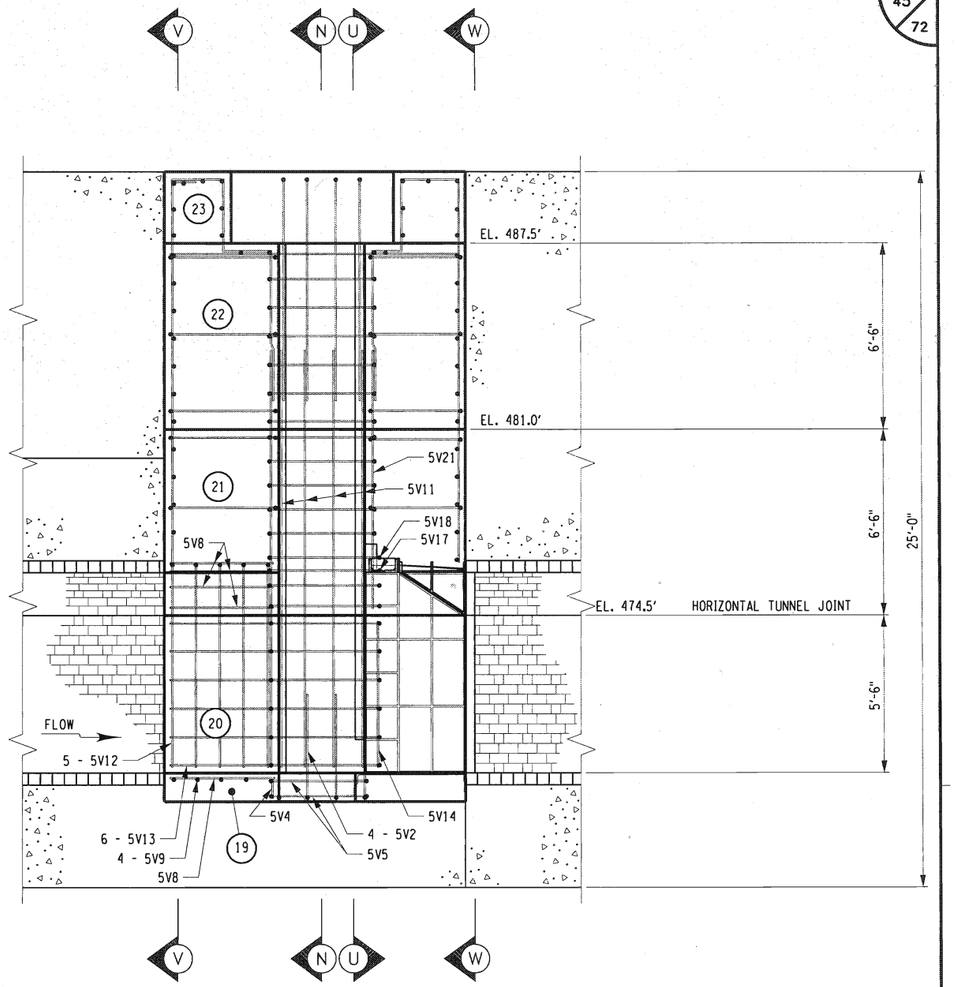

SECTION AT CENTERLINE OF TUNNEL SHOWING REINFORCING BAR PLACEMENT
SCALE: 3/8" = 1'-0"

NOTES:

1. ALL REINFORCEMENT SHALL HAVE 3" COVER UNLESS OTHERWISE NOTED.
2. DRILL BARS INDICATED "+" INTO SOUND CONCRETE WITH 14" EMBEDMENT UNDER ITEM 586.02 25.
3. CONCRETE POUR NUMBERS ARE INDICATED THUSLY "(#)".
4. ALL REBAR TO BE PROVIDED AND INSTALLED UNDER ITEM 556.0201.
5. REFER TO DRAWINGS BB-1, BL-2, AND BL-3 FOR REINFORCEMENT DETAILS AND BAR LISTS.
6. REFER TO DRAWING CP-9 FOR SECTIONS AND DETAILS.
7. PLACE PATCHING MATERIAL IN VOIDS CREATED DURING CONCRETE REMOVAL AND PLACEMENT ACTIVITIES. REFER TO DRAWING CG-2 FOR BRICK VOID REPAIR DETAILS, AND BRICK REPAIR NOTES ON DRAWING GN-1.

LEGEND

SYMBOL	DESCRIPTION
	NEW STRUCTURAL CONCRETE UNDER ITEM 555.0105
	BACKFILL WITH SUITABLE EXCAVATED MATERIAL UNDER ITEM 206.01
	EXISTING CONCRETE (TO REMAIN)
	EXISTING GRADE (TO REMAIN)

ALTERED ON:	AFFIXED ON: 6-21-16
SIGNATURE: STAMP:	SIGNATURE: STAMP: STATE OF NEW YORK · F. DAVID HUDDA · 061048 · LICENSED PROFESSIONAL ENGINEER

IT IS A VIOLATION OF LAW FOR ANY PERSON, UNLESS THEY ARE ACTING UNDER THE DIRECTION OF A LICENSED PROFESSIONAL ENGINEER, ARCHITECT, LANDSCAPE ARCHITECT, OR LAND SURVEYOR, TO ALTER AN ITEM IN ANY WAY. IF AN ITEM BEARING THE STAMP OF A LICENSED PROFESSIONAL IS ALTERED, THE ALTERING ENGINEER, ARCHITECT, LANDSCAPE ARCHITECT, OR LAND SURVEYOR SHALL STAMP THE DOCUMENT AND INCLUDE THE NOTATION "ALTERED BY" FOLLOWED BY THEIR SIGNATURE. THE DATE OF SUCH ALTERATION, AND A SPECIFIC DESCRIPTION OF THE ALTERATION.

REVISIONS

DATE	DESCRIPTION	BY	SYM.

NEW YORK STATE THRUWAY AUTHORITY
DEPARTMENT OF ENGINEERING
200 SOUTHERN BLVD., ALBANY, N.Y. 12209

TITLE OF PROJECT: LOCK E-32 BYPASS CULVERT REPAIR
LOCATION OF PROJECT: TOWN OF PITTSFORD MONROE COUNTY
TITLE OF DRAWING: CONCRETE AND REINFORCEMENT PLACEMENT DETAILS VIII

CONTRACT NUMBER: TAB 16-26C
DATE: 6/17/16
DRAWING NUMBER: CP-8

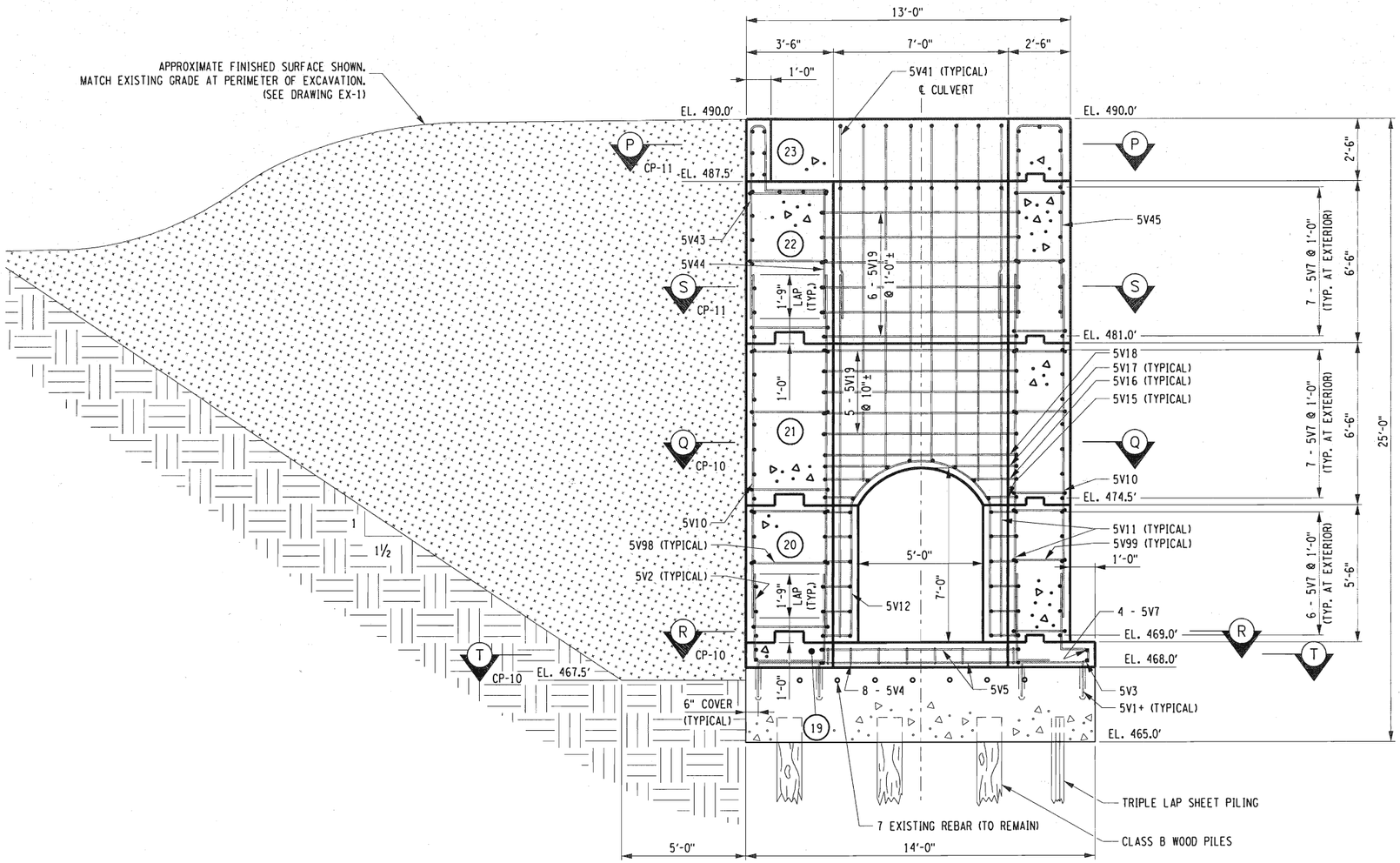

SECTION N-N
SCALE: 3/8" = 1'-0"

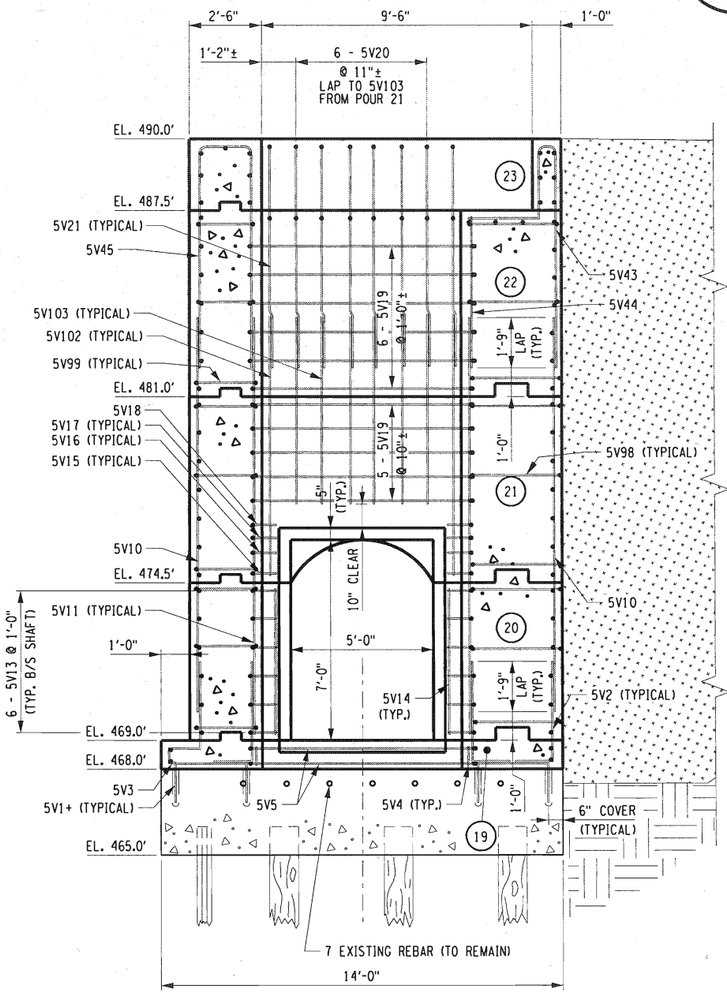

SECTION U-U
SCALE: 3/8" = 1'-0"

NOTES:

1. ALL REINFORCEMENT SHALL HAVE 3" COVER UNLESS OTHERWISE NOTED.
2. DRILL BARS INDICATED "+" INTO SOUND CONCRETE WITH 14" EMBEDMENT UNDER ITEM 586.02 25.
3. CONCRETE POUR NUMBERS ARE INDICATED THUSLY "(#)".
4. ALL REBAR TO BE PROVIDED AND INSTALLED UNDER ITEM 556.0201.
5. REFER TO DRAWINGS BB-1, BL-2, AND BL-3 FOR REINFORCEMENT DETAILS AND BAR LISTS.
6. SEE NOTE 7 ON DRAWING CP-8.

LEGEND

SYMBOL	DESCRIPTION
	NEW STRUCTURAL CONCRETE UNDER ITEM 555.0105
	BACKFILL WITH SUITABLE EXCAVATED MATERIAL UNDER ITEM 206.01
	EXISTING CONCRETE (TO REMAIN)
	EXISTING GRADE/EMBANKMENT (TO REMAIN)

ALTERED ON:

AFFIXED ON: 6-21-16

SIGNATURE:
STAMP:

SIGNATURE:
STAMP:

STATE OF NEW YORK
F. DAVID HUDDA
061048
LICENSED PROFESSIONAL ENGINEER

IT IS A VIOLATION OF LAW FOR ANY PERSON, UNLESS THEY ARE ACTING UNDER THE DIRECTION OF A LICENSED PROFESSIONAL ENGINEER, ARCHITECT, LANDSCAPE ARCHITECT, OR LAND SURVEYOR, TO ALTER AN ITEM IN ANY WAY. IF AN ITEM BEARING THE STAMP OF A LICENSED PROFESSIONAL IS ALTERED, THE ALTERING ENGINEER, ARCHITECT, LANDSCAPE ARCHITECT, OR LAND SURVEYOR SHALL STAMP THE DOCUMENT AND INCLUDE THE NOTATION "ALTERED BY" FOLLOWED BY THEIR SIGNATURE. THE DATE OF SUCH ALTERATION, AND A SPECIFIC DESCRIPTION OF THE ALTERATION.

REVISIONS

DATE	DESCRIPTION	BY	SYM.

NEW YORK STATE THRUWAY AUTHORITY
DEPARTMENT OF ENGINEERING
200 SOUTHERN BLVD., ALBANY, N.Y. 12209

TITLE OF PROJECT: LOCK E-32 BYPASS CULVERT REPAIR
LOCATION OF PROJECT: TOWN OF PITTSFORD MONROE COUNTY
TITLE OF DRAWING: CONCRETE AND REINFORCEMENT PLACEMENT DETAILS IX

CONTRACT NUMBER: TAB 16-26C
DATE: 6/17/16
DRAWING NUMBER: CP-9

DESIGN SUPERVISOR: R. KARIS
DESIGNED BY: J.S. LeBLANC
CHECKED BY: D. HUDDA
DRAFTED BY: J.S. LeBLANC
CHECKED BY: D. HUDDA
2016\(B94058\Design\Plans\PROPOSED BYPASS VALVE.dgn

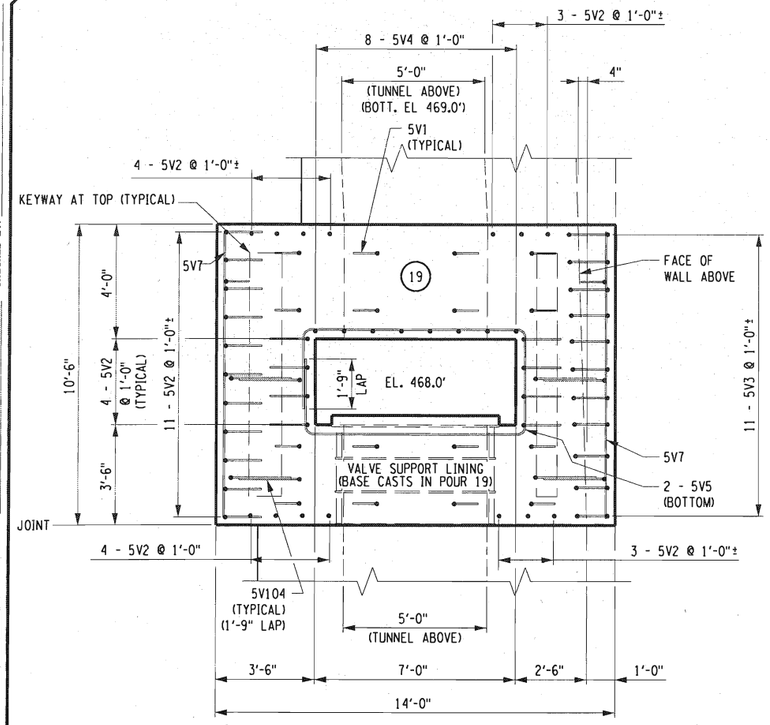

SECTION T-T
SCALE: 3/8" = 1'-0"

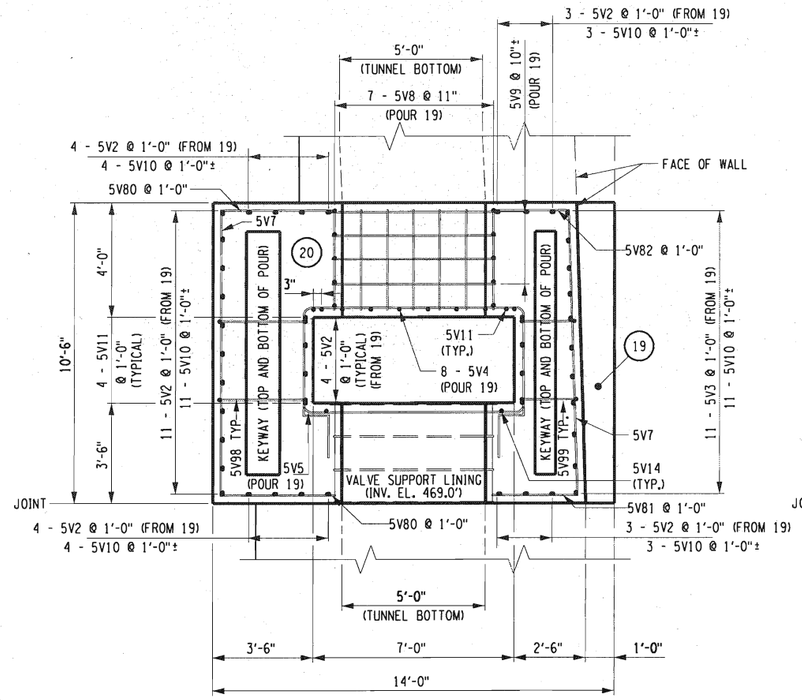

SECTION R-R
SCALE: 3/8" = 1'-0"

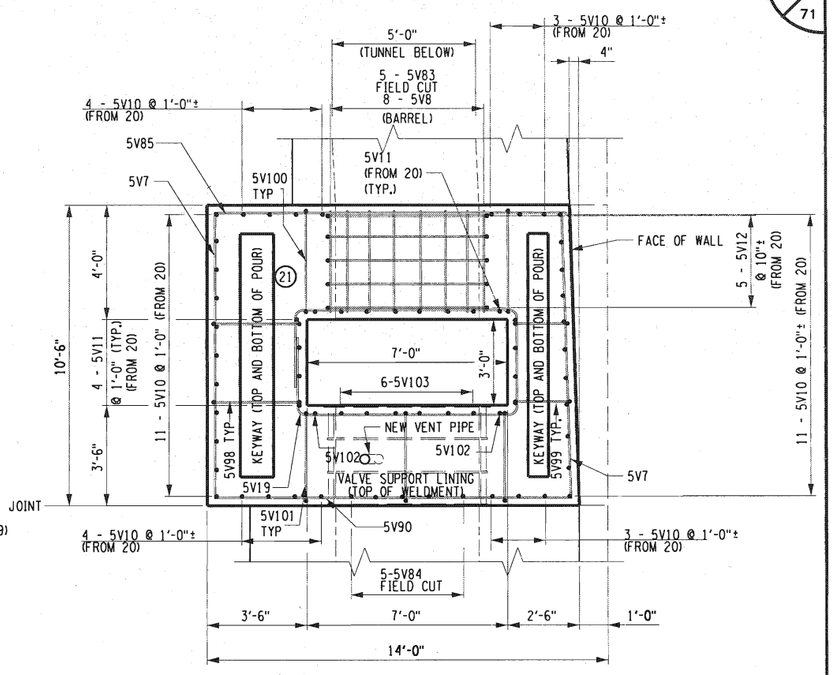

SECTION Q-Q
SCALE: 3/8" = 1'-0"

NOTES:

1. ALL REINFORCEMENT SHALL HAVE 3" COVER UNLESS OTHERWISE NOTED.
2. DRILL BARS INDICATED "+" INTO SOUND CONCRETE WITH 14" EMBEDMENT UNDER ITEM 586.02 25.
3. CONCRETE POUR NUMBERS ARE INDICATED THUSLY "(#)".
4. ALL REBAR TO BE PROVIDED AND INSTALLED UNDER ITEM 556.0201.
5. REFER TO DRAWINGS BB-1, BL-2, AND BL-3 FOR REINFORCEMENT DETAILS AND BAR LISTS.

ALTERED ON:	AFFIXED ON: 6-21-16
SIGNATURE: STAMP:	SIGNATURE: STAMP: STATE OF NEW YORK · F. DAVID HUDDA · 061048 · LICENSED PROFESSIONAL ENGINEER

IT IS A VIOLATION OF LAW FOR ANY PERSON, UNLESS THEY ARE ACTING UNDER THE DIRECTION OF A LICENSED PROFESSIONAL ENGINEER, ARCHITECT, LANDSCAPE ARCHITECT, OR LAND SURVEYOR, TO ALTER AN ITEM IN ANY WAY. IF AN ITEM BEARING THE STAMP OF A LICENSED PROFESSIONAL IS ALTERED, THE ALTERING ENGINEER, ARCHITECT, LANDSCAPE ARCHITECT, OR LAND SURVEYOR SHALL STAMP THE DOCUMENT AND INCLUDE THE NOTATION "ALTERED BY" FOLLOWED BY THEIR SIGNATURE. THE DATE OF SUCH ALTERATION, AND A SPECIFIC DESCRIPTION OF THE ALTERATION.

REVISIONS

DATE	DESCRIPTION	BY	SYM.

NEW YORK STATE THRUWAY AUTHORITY
DEPARTMENT OF ENGINEERING
200 SOUTHERN BLVD., ALBANY, N.Y. 12209

TITLE OF PROJECT: LOCK E-32 BYPASS CULVERT REPAIR
LOCATION OF PROJECT: TOWN OF PITTSFORD MONROE COUNTY
TITLE OF DRAWING: CONCRETE AND REINFORCEMENT PLACEMENT DETAILS X

CONTRACT NUMBER: TAB 16-26C
DATE: 6/20/16
DRAWING NUMBER: CP-10

DESIGN SUPERVISOR: R. KARIS
DRAWN BY: D. HUDDA
DESIGNED BY: J.S. LeBLANC
CHECKED BY: D. HUDDA
2016\B94058\Design\Plans\PROPOSED BYPASS VALVE.dgn

NOTE: REFER TO DRAWING CP-13 FOR EMBEDDED GRATING SUPPORT ANGLE PLAN.

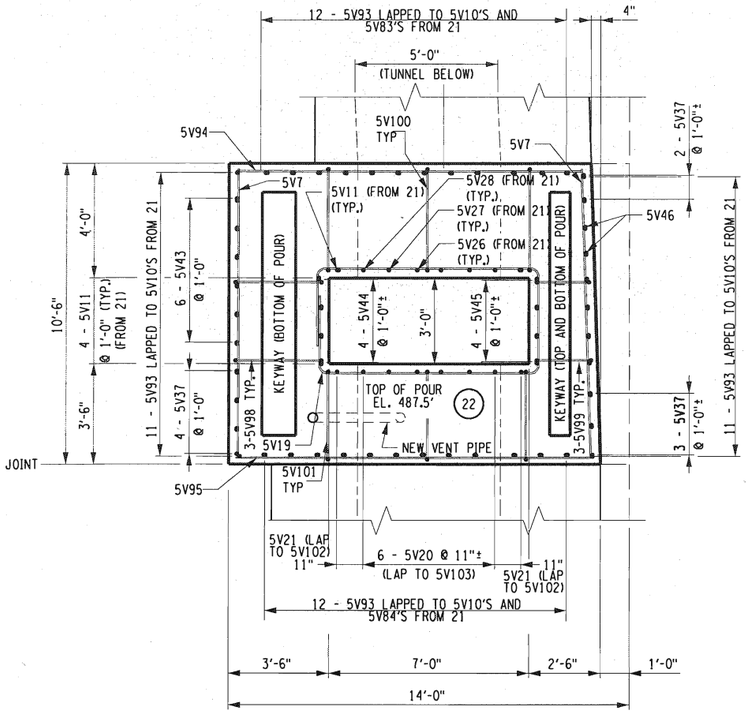

SECTION S-S
SCALE: 3/8" = 1'-0"

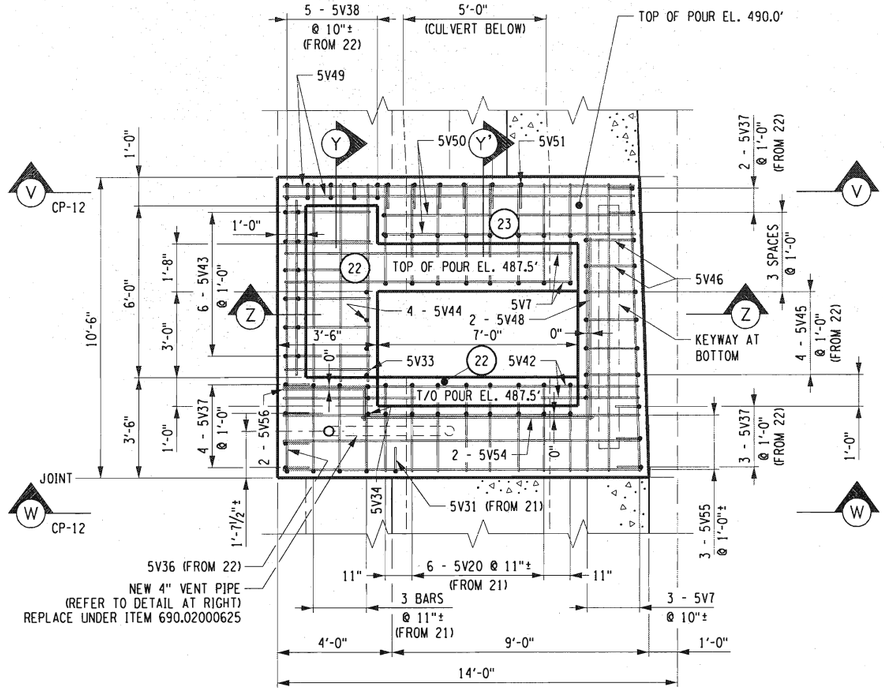

SECTION P-P
SCALE: 3/8" = 1'-0"

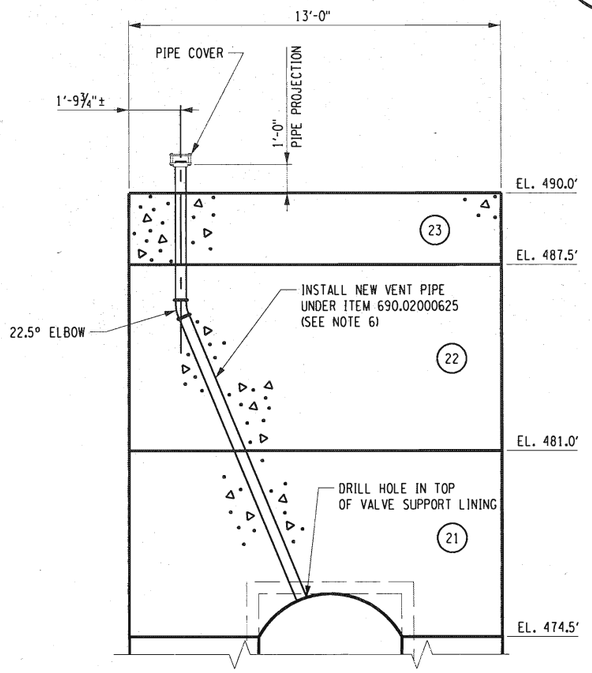

VENT PIPE DETAIL
SCALE: 3/8" = 1'-0"

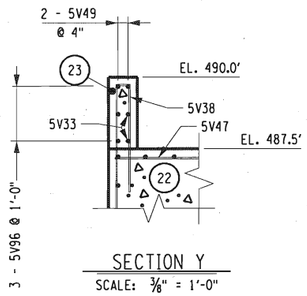

SECTION Y
SCALE: 3/8" = 1'-0"

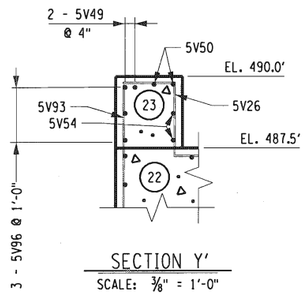

SECTION Y'
SCALE: 3/8" = 1'-0"

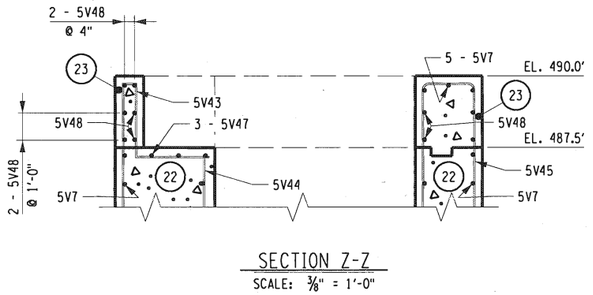

SECTION Z-Z
SCALE: 3/8" = 1'-0"

NOTES:

1. ALL REINFORCEMENT SHALL HAVE 3" COVER UNLESS OTHERWISE NOTED.
2. DRILL BARS INDICATED "+" INTO SOUND CONCRETE WITH 14" EMBEDMENT UNDER ITEM 586.02 25.
3. CONCRETE POUR NUMBERS ARE INDICATED THUSLY "(#)".
4. ALL REBAR TO BE PROVIDED AND INSTALLED UNDER ITEM 556.0201.
5. REFER TO DRAWINGS BB-1, BL-2, AND BL-3 FOR REINFORCEMENT DETAILS AND BAR LISTS.
6. NEW VENT PIPE SHALL BE 4" SCHEDULE 40 PIPE. PROVIDE NEW 22.5° ELBOW FOR NEW INSTALLATION. REMOVE AND RE-USE EXISTING PIPE COVER A.O.B.E. IF EXISTING COVER CANNOT BE EASILY REMOVED, OR IS IN DETERIORATED CONDITION, REPLACE WITH NEW IN-KIND FABRICATION AND PAINT IN THE SHOP A.O.B.E. CUT OFF PIPE FLUSH WITH THE INNER SURFACE OF THE TUNNEL LINING TO AVOID PROJECTION OF THE VENT PIPE INTO THE CULVERT FLOW. PAINT EXPOSED TOP SECTION OF PIPE BLUE. PAINT THE NEW PIPE COVER (IF REQUIRED) YELLOW. SEE DRAWING ST-3 FOR ITEM NUMBERS.

ALTERED ON:	AFFIXED ON: 6-21-16
SIGNATURE: STAMP:	SIGNATURE: STAMP: STATE OF NEW YORK · F. DAVID HUDDA · 061048 · LICENSED PROFESSIONAL ENGINEER

IT IS A VIOLATION OF LAW FOR ANY PERSON, UNLESS THEY ARE ACTING UNDER THE DIRECTION OF A LICENSED PROFESSIONAL ENGINEER, ARCHITECT, LANDSCAPE ARCHITECT, OR LAND SURVEYOR, TO ALTER AN ITEM IN ANY WAY. IF AN ITEM BEARING THE STAMP OF A LICENSED PROFESSIONAL IS ALTERED, THE ALTERING ENGINEER, ARCHITECT, LANDSCAPE ARCHITECT, OR LAND SURVEYOR SHALL STAMP THE DOCUMENT AND INCLUDE THE NOTATION "ALTERED BY" FOLLOWED BY THEIR SIGNATURE. THE DATE OF SUCH ALTERATION, AND A SPECIFIC DESCRIPTION OF THE ALTERATION.

REVISIONS

DATE	DESCRIPTION	BY	SYM.

NEW YORK STATE THRUWAY AUTHORITY
DEPARTMENT OF ENGINEERING
200 SOUTHERN BLVD., ALBANY, N.Y. 12209

TITLE OF PROJECT: LOCK E-32 BYPASS CULVERT REPAIR
LOCATION OF PROJECT: TOWN OF PITTSFORD MONROE COUNTY
TITLE OF DRAWING: CONCRETE AND REINFORCEMENT PLACEMENT DETAILS XI

CONTRACT NUMBER: TAB 16-26C
DATE: 6/20/16
DRAWING NUMBER: CP-11

DESIGN SUPERVISOR: R. KARIS
DESIGNED BY: J.S. LeBLANC
CHECKED BY: D. HUDDA
DRAFTED BY: J.S. LeBLANC
CHECKED BY: D. HUDDA
2016\B94058\Design\Plans\PROPOSED BYPASS VALVE.dgn

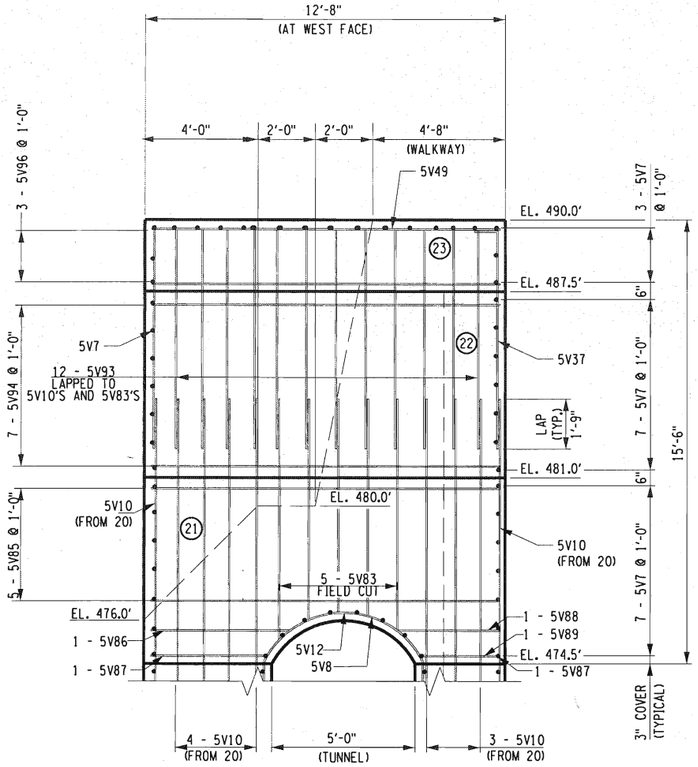

SECTION V-V
SCALE: 3/8" = 1'-0"

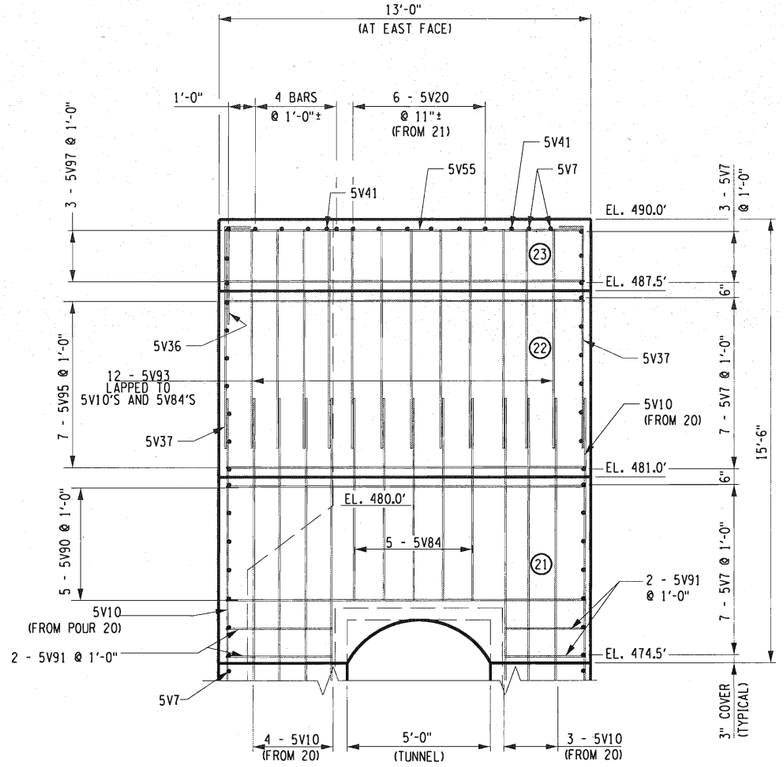

SECTION W-W
SCALE: 3/8" = 1'-0"

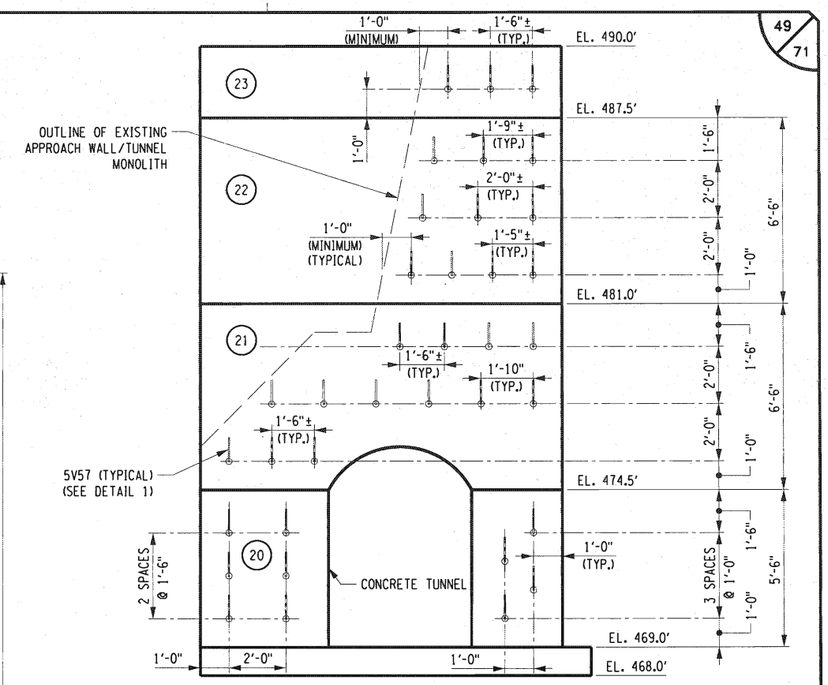

WEST FACE OF VALVE WELL - TIE-IN REINFORCEMENT
SCALE: 3/8" = 1'-0"

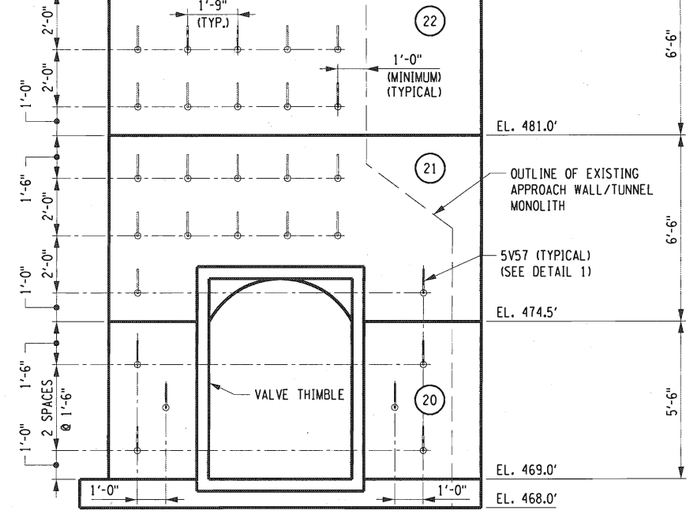

EAST FACE OF VALVE WELL - TIE-IN REINFORCEMENT
SCALE: 3/8" = 1'-0"

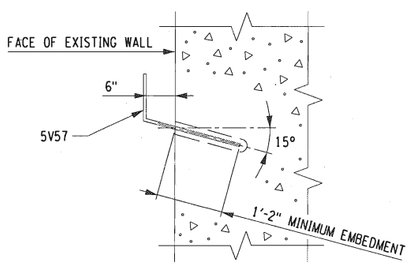

DETAIL 1
SCALE: 3/4" = 1'-0"

NOTES:

1. ALL REINFORCEMENT SHALL HAVE 3" COVER UNLESS OTHERWISE NOTED.
2. DRILL BARS INDICATED "+" INTO SOUND CONCRETE WITH 14" EMBEDMENT UNDER ITEM 586.02 25.
3. CONCRETE POUR NUMBERS ARE INDICATED THUSLY "(#)".
4. ALL REBAR TO BE PROVIDED AND INSTALLED UNDER ITEM 556.0201.
5. REFER TO DRAWINGS BB-1, BL-2, AND BL-3 FOR REINFORCEMENT DETAILS AND BAR LISTS.

ALTERED ON:	AFFIXED ON: 6-21-16
SIGNATURE: STAMP:	SIGNATURE: STAMP: STATE OF NEW YORK · F. DAVID HUDDA · 061048 · LICENSED PROFESSIONAL ENGINEER

IT IS A VIOLATION OF LAW FOR ANY PERSON, UNLESS THEY ARE ACTING UNDER THE DIRECTION OF A LICENSED PROFESSIONAL ENGINEER, ARCHITECT, LANDSCAPE ARCHITECT, OR LAND SURVEYOR, TO ALTER AN ITEM IN ANY WAY. IF AN ITEM BEARING THE STAMP OF A LICENSED PROFESSIONAL IS ALTERED, THE ALTERING ENGINEER, ARCHITECT, LANDSCAPE ARCHITECT, OR LAND SURVEYOR SHALL STAMP THE DOCUMENT AND INCLUDE THE NOTATION "ALTERED BY" FOLLOWED BY THEIR SIGNATURE. THE DATE OF SUCH ALTERATION, AND A SPECIFIC DESCRIPTION OF THE ALTERATION.

REVISIONS

DATE	DESCRIPTION	BY	SYM.

NEW YORK STATE THRUWAY AUTHORITY
DEPARTMENT OF ENGINEERING
200 SOUTHERN BLVD., ALBANY, N.Y. 12209

TITLE OF PROJECT: LOCK E-32 BYPASS CULVERT REPAIR
LOCATION OF PROJECT: TOWN OF PITTSFORD MONROE COUNTY
TITLE OF DRAWING: CONCRETE AND REINFORCEMENT PLACEMENT DETAILS XII

CONTRACT NUMBER: TAB 16-26C
DATE: 6/20/16
DRAWING NUMBER: CP-12

DESIGN SUPERVISOR: R. KARIS
DESIGNED BY: J.S. LeBLANC
CHECKED BY: D. HUDDA
DRAFTED BY: J.S. LeBLANC
CHECKED BY: D. HUDDA
2016\B84058\Design\Plans\PROPOSED BYPASS VALVE.dgn

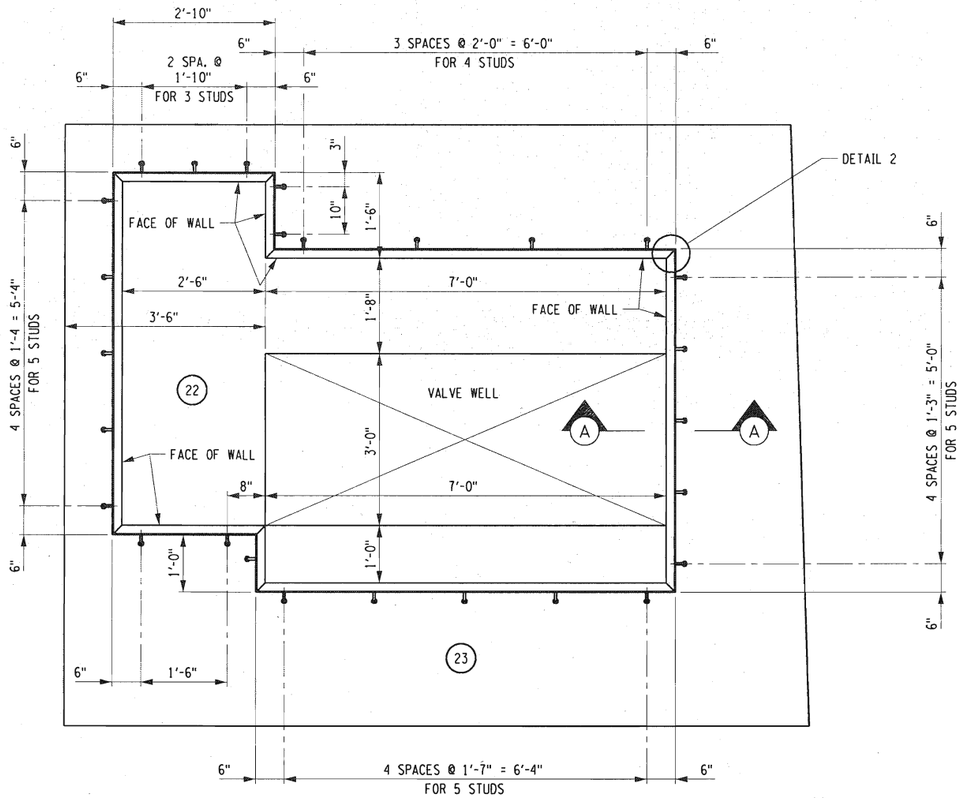

EMBEDDED GRATING SUPPORT ANGLE PLAN

SCALE: 3/4" = 1'-0"

NOTES:

1. ALL REINFORCEMENT SHALL HAVE 3" COVER UNLESS OTHERWISE NOTED.
2. CONCRETE POUR NUMBERS ARE INDICATED THUSLY "(#)".
3. GRATING SUPPORT ANGLES SHALL BE PROVIDED, FABRICATED, AND INSTALLED UNDER ITEM 564.0501.
4. GALVANIZED STEEL GRATING SHALL BE PROVIDED, FABRICATED, AND INSTALLED UNDER ITEM 665.2009--12.
5. GRATING SUPPORT FRAMES SHALL BE PAINTED AFTER FABRICATION UNDER ITEM 570.92930112. BACK SIDES OF ANGLES AND STUDS SHALL RECEIVE ONLY THE PRIMER COAT AS THEY WILL BE IN CONTACT/EMBEDDED IN NEW CONCRETE.
6. " ⟋ " INDICATES DIRECTION OF BEARING BARS.
7. THE CONTRACTOR SHALL VERIFY THE LOCATION OF THE VALVE OPERATING TEE, THE STEM OF WHICH WILL PASS THROUGH GRATE NUMBER 4, BEFORE CUTTING AND BANDING THE HOLE IN THE GRATE. PERFORM MODIFICATIONS TO THE GRATE AND REPAIRS TO THE GALVANIZING AS REQUIRED UNDER THE ITEM 665.2009--12 SPECIFICATION.

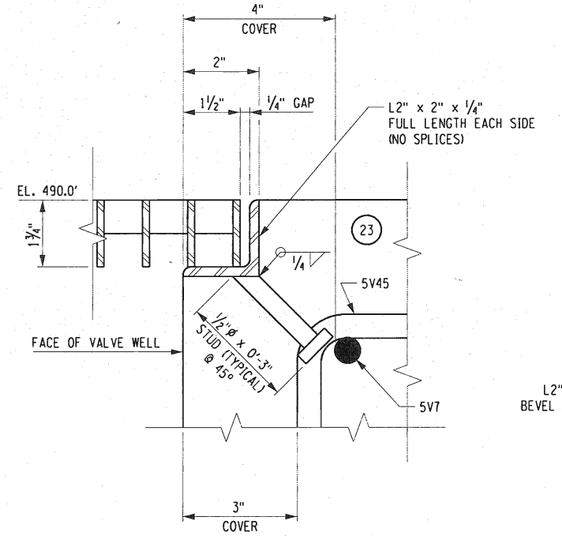

SECTION A-A
(TYPICAL CONFIGURATION OF GRATING SUPPORT ANGLES)

SCALE: 6" = 1'-0"

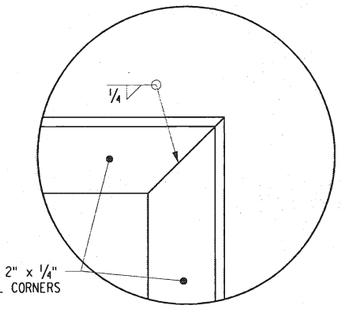

DETAIL 2

SCALE: 6" = 1'-0"

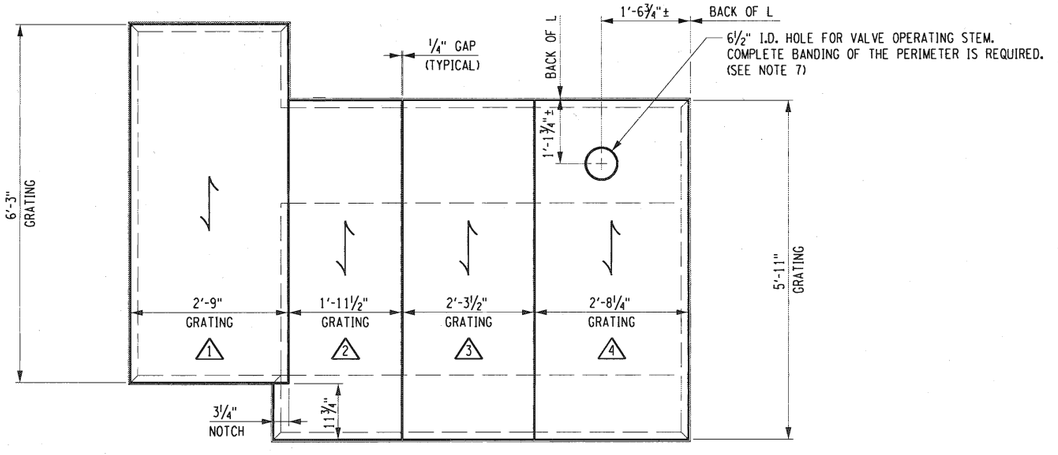

STEEL GRATING SCHEDULE

GRATING NUMBER	SPAN	WIDTH	BEARING BAR CTR. TO CTR.	BEARING BAR SIZE	CROSS BAR CTR. TO CTR.	AREA (SQUARE FEET)	NOTCH
1	6'-3"	2'-9"	1 3/16"	3/16" x 1¾"	4"	17.19	-
2	5'-11"	2'-2¾"	1 3/16"	3/16" x 1¾"	4"	11.85	3¼" x 4'-11¼"
3	5'-11"	2'-3½"	1 3/16"	3/16" x 1¾"	4"	13.56	-
4	5'-11"	2'-8¼"	1 3/16"	3/16" x 1¾"	4"	15.90	-

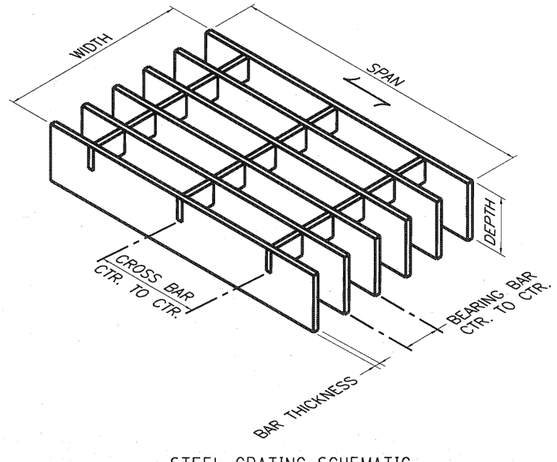

STEEL GRATING SCHEMATIC

NOT TO SCALE

ALTERED ON:	AFFIXED ON: 6-21-16
SIGNATURE: STAMP:	SIGNATURE: STAMP: STATE OF NEW YORK F. DAVID HUDDA 061048 LICENSED PROFESSIONAL ENGINEER

IT IS A VIOLATION OF LAW FOR ANY PERSON, UNLESS THEY ARE ACTING UNDER THE DIRECTION OF A LICENSED PROFESSIONAL ENGINEER, ARCHITECT, LANDSCAPE ARCHITECT, OR LAND SURVEYOR, TO ALTER AN ITEM IN ANY WAY. IF AN ITEM BEARING THE STAMP OF A LICENSED PROFESSIONAL IS ALTERED, THE ALTERING ENGINEER, ARCHITECT, LANDSCAPE ARCHITECT, OR LAND SURVEYOR SHALL STAMP THE DOCUMENT AND INCLUDE THE NOTATION "ALTERED BY" FOLLOWED BY THEIR SIGNATURE. THE DATE OF SUCH ALTERATION, AND A SPECIFIC DESCRIPTION OF THE ALTERATION.

REVISIONS

DATE	DESCRIPTION	BY	SYM.

NEW YORK STATE THRUWAY AUTHORITY
DEPARTMENT OF ENGINEERING
200 SOUTHERN BLVD., ALBANY, N.Y. 12209

TITLE OF PROJECT: LOCK E-32 BYPASS CULVERT REPAIR

LOCATION OF PROJECT: TOWN OF PITTSFORD MONROE COUNTY

TITLE OF DRAWING: CONCRETE AND REINFORCEMENT PLACEMENT DETAILS XIII

CONTRACT NUMBER: TAB 16-26C

DATE: 6/15/16

DRAWING NUMBER: CP-13

DESIGN SUPERVISOR: R. KARIS
DESIGNED BY: J.S. LeBLANC
CHECKED BY: D. HUDDA
DRAFTED BY: J.S. LeBLANC
CHECKED BY: D. HUDDA
2016\B94058\Design\Plans\PROPOSED BYPASS VALVE.dgn

2016/894058/Design/Plans/OUTLET CONCRETE REPAIRS.dgn
DRAFTED BY: J.S. LeBLANC
CHECKED BY: R. KARIS
DESIGNED BY: J.S. LeBLANC
CHECKED BY: R. KARIS
DESIGN SUPERVISOR: R. KARIS

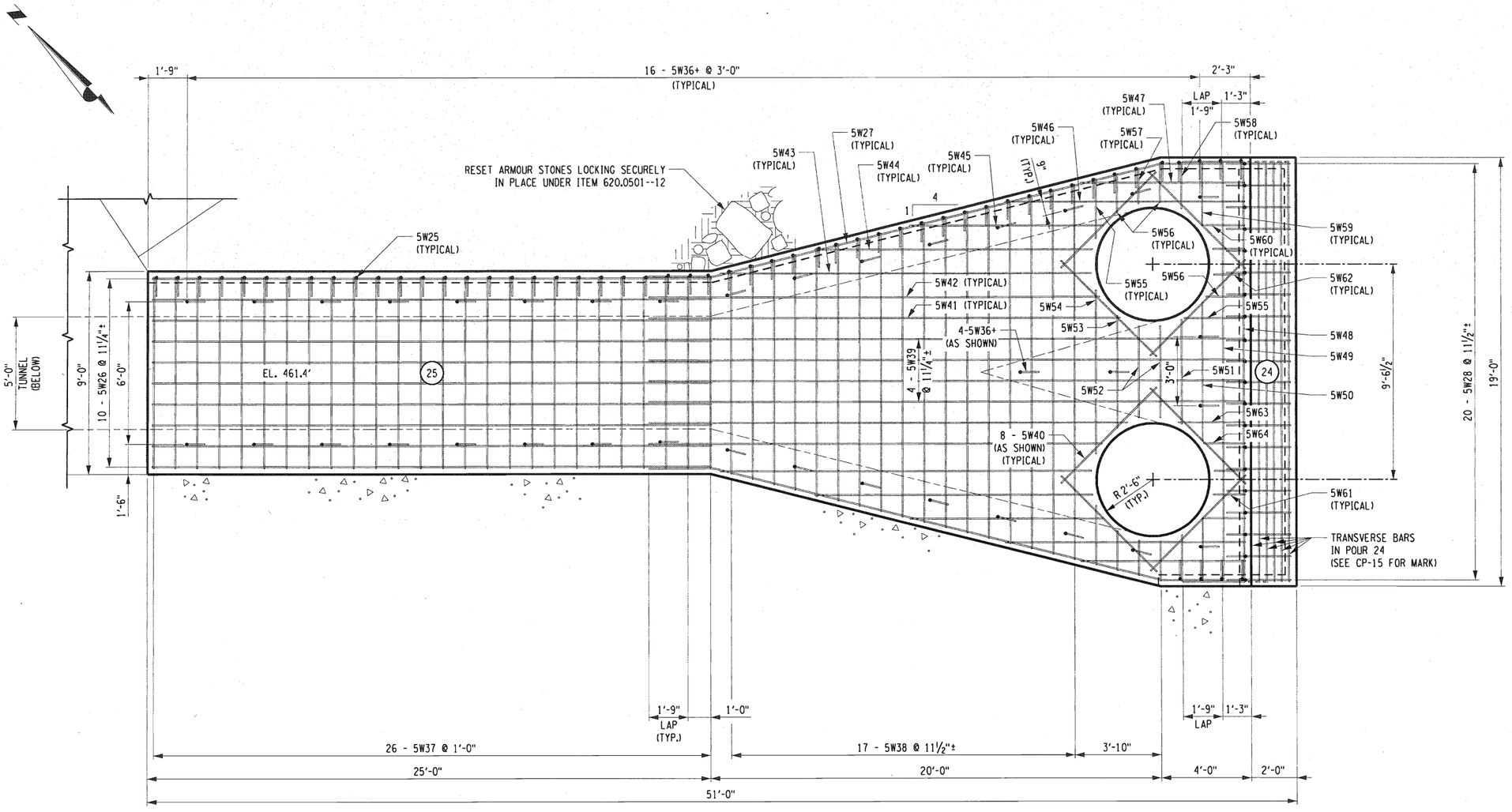

LEGEND	
SYMBOL	DESCRIPTION
	NEW STRUCTURAL CONCRETE UNDER ITEM 555.0105
	EXISTING CONCRETE (TO REMAIN)
	EXISTING GRADE (TO REMAIN)

CONCRETE REPLACEMENT PLAN

SCALE: ⅜" = 1'-0"

NOTES:

1. ALL REINFORCEMENT SHALL HAVE 3" COVER UNLESS OTHERWISE NOTED.
2. DRILL BARS INDICATED "+" INTO SOUND CONCRETE WITH 14" EMBEDMENT UNDER ITEM 586.02 25.
3. CONCRETE POUR NUMBERS ARE INDICATED THUSLY "(#)".
4. ALL REBAR TO BE PROVIDED AND INSTALLED UNDER ITEM 556.0201.
5. REFER TO DRAWINGS BB-1 AND BL-3 FOR REINFORCEMENT DETAILS AND BAR LISTS.
6. TOP OF FINISHED WALKWAY CONCRETE IS 461.4'.
7. REFER TO DRAWING CP-5 FOR POUR TABLE.

ALTERED ON:	AFFIXED ON: 6-21-16
SIGNATURE: STAMP:	SIGNATURE: STAMP: STATE OF NEW YORK · F. DAVID HUDDA · 061048 · LICENSED PROFESSIONAL ENGINEER

IT IS A VIOLATION OF LAW FOR ANY PERSON, UNLESS THEY ARE ACTING UNDER THE DIRECTION OF A LICENSED PROFESSIONAL ENGINEER, ARCHITECT, LANDSCAPE ARCHITECT, OR LAND SURVEYOR, TO ALTER AN ITEM IN ANY WAY. IF AN ITEM BEARING THE STAMP OF A LICENSED PROFESSIONAL IS ALTERED, THE ALTERING ENGINEER, ARCHITECT, LANDSCAPE ARCHITECT, OR LAND SURVEYOR SHALL STAMP THE DOCUMENT AND INCLUDE THE NOTATION "ALTERED BY" FOLLOWED BY THEIR SIGNATURE. THE DATE OF SUCH ALTERATION, AND A SPECIFIC DESCRIPTION OF THE ALTERATION.

REVISIONS			
DATE	DESCRIPTION	BY	SYM.

NEW YORK STATE THRUWAY AUTHORITY
DEPARTMENT OF ENGINEERING
200 SOUTHERN BLVD., ALBANY, N.Y. 12209

TITLE OF PROJECT: LOCK E-32 BYPASS CULVERT REPAIR
LOCATION OF PROJECT: TOWN OF PITTSFORD MONROE COUNTY
TITLE OF DRAWING: CONCRETE AND REINFORCEMENT PLACEMENT DETAILS XIV

CONTRACT NUMBER: TAB 16-26C
DATE: 6/14/16
DRAWING NUMBER: CP-14

2016/B94058/Design/Plans/OUTLET CONCRETE REPAIRS.dgn
DRAFTED BY: J.S. LeBLANC
DESIGNED BY: J.S. LeBLANC
CHECKED BY: D. HUDDA
CHECKED BY: D. HUDDA
DESIGN SUPERVISOR: R. KARIS

END OUTLET STRUCTURE
LIMIT OF CONCRETE PLACEMENT UNDER ITEM 555.0105

JOINT (BEGIN OUTLET STRUCTURE)
LIMIT OF CONCRETE PLACEMENT UNDER ITEM 555.0105

51'-0"
2'-0"
49'-0"
50'-2⅜"
51 - 5W25 @ 1'-0"±

TRANSVERSE BARS (SEE PLAN FOR MARK)
17 - 5W38 @ 11½"±
25'-0"
4'-0"±
7 - 5W24Δ @ 3'-0"
1'-0"
1'-9" LAP
4 - 5W24Δ @ 2'-6"
2'-10"±
2'-1"±
5 - 5W24Δ @ 2'-6"

3 - 5W24Δ (AS SHOWN)
3 - 5W24Δ (AS SHOWN)
5W37 (TYPICAL)
5W28
RESET STORED ARMOUR STONES LOCKING SECURELY IN PLACE UNDER ITEM 620.0501--12
7 - 5W27 @ 11"
7 - 5W26 @ 11"
2 SPA. @ 2'-3" FOR 5W24

POOL EL. 462.4'
EL. 461.4'
EL. 455.4'
EL. 451.4'
EL. 449.4'
APPROXIMATE GRADE
APPROXIMATE GRADE

1'-0"
6'-0"
12'-0"
4'-0"
2'-0"
6'-0"

LEGEND

SYMBOL	DESCRIPTION
	NEW STRUCTURAL CONCRETE UNDER ITEM 555.0105
	EXISTING CONCRETE (TO REMAIN)
	EXISTING GRADE (TO REMAIN)

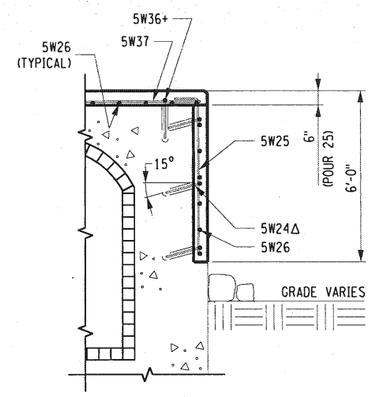

SECTION Y-Y
SCALE: ⅜" = 1'-0"

NOTES:

1. ALL REINFORCEMENT SHALL HAVE 3" COVER UNLESS OTHERWISE NOTED.
2. DRILL BARS INDICATED "+" INTO SOUND CONCRETE WITH 14" EMBEDMENT UNDER ITEM 586.02 25.
3. DRILL BARS INDICATED "Δ" INTO SOUND CONCRETE WITH 12" EMBEDMENT UNDER ITEM 586.02 25.
4. CONCRETE POUR NUMBERS ARE INDICATED THUSLY "(#)".
5. ALL REBAR TO BE PROVIDED AND INSTALLED UNDER ITEM 556.0201.
6. REFER TO DRAWINGS BB-1 AND BL-3 FOR REINFORCEMENT DETAILS AND BAR LISTS.
7. TOP OF FINISHED WALKWAY CONCRETE IS 461.4'.
8. REFER TO DRAWING CP-5 FOR POUR TABLE.
9. "!" INDICATES BARS TO BE CUT TO LENGTH IN FIELD.
10. "•" INDICATES BAR MARK IS OUT OF SEQUENCE.

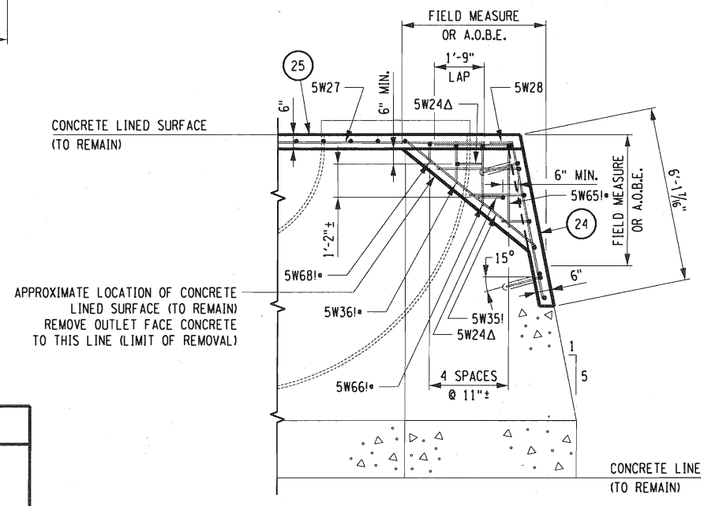

SECTION X-X
SCALE: ⅜" = 1'-0"

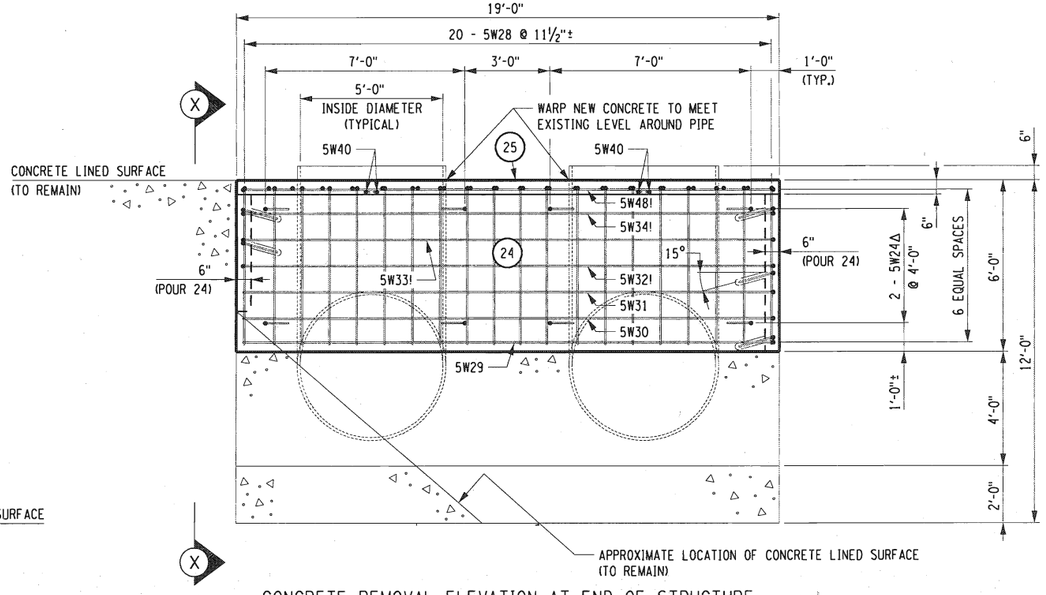

CONCRETE REMOVAL ELEVATION AT END OF STRUCTURE
SCALE: ⅜" = 1'-0"

ALTERED ON:	AFFIXED ON: 6-21-16
SIGNATURE: STAMP:	SIGNATURE: STAMP: STATE OF NEW YORK · F. DAVID HUDDA · 061048 · LICENSED PROFESSIONAL ENGINEER

IT IS A VIOLATION OF LAW FOR ANY PERSON, UNLESS THEY ARE ACTING UNDER THE DIRECTION OF A LICENSED PROFESSIONAL ENGINEER, ARCHITECT, LANDSCAPE ARCHITECT, OR LAND SURVEYOR, TO ALTER AN ITEM IN ANY WAY. IF AN ITEM BEARING THE STAMP OF A LICENSED PROFESSIONAL IS ALTERED, THE ALTERING ENGINEER, ARCHITECT, LANDSCAPE ARCHITECT, OR LAND SURVEYOR SHALL STAMP THE DOCUMENT AND INCLUDE THE NOTATION "ALTERED BY" FOLLOWED BY THEIR SIGNATURE. THE DATE OF SUCH ALTERATION, AND A SPECIFIC DESCRIPTION OF THE ALTERATION.

REVISIONS

DATE	DESCRIPTION	BY	SYM.

NEW YORK STATE THRUWAY AUTHORITY
DEPARTMENT OF ENGINEERING
200 SOUTHERN BLVD., ALBANY, N.Y. 12209

TITLE OF PROJECT: LOCK E-32 BYPASS CULVERT REPAIR
LOCATION OF PROJECT: TOWN OF PITTSFORD MONROE COUNTY
TITLE OF DRAWING: CONCRETE AND REINFORCEMENT PLACEMENT DETAILS XV

CONTRACT NUMBER: TAB 16-26C
DATE: 6/14/16
DRAWING NUMBER: CP-15

2016/B94058/Design/Plans/INLET CONCRETE REPAIRS.dgn
DRAFTED BY: J.S. LeBLANC
CHECKED BY: D. HUDDA
DESIGNED BY: J.S. LeBLANC
CHECKED BY: D. HUDDA
DESIGN SUPERVISOR: R. KARIS

LEGEND	
SYMBOL	DESCRIPTION
	NEW STRUCTURAL CONCRETE UNDER ITEM 555.0105
	EXISTING CONCRETE (TO REMAIN)
	EXISTING GRADE (TO REMAIN)

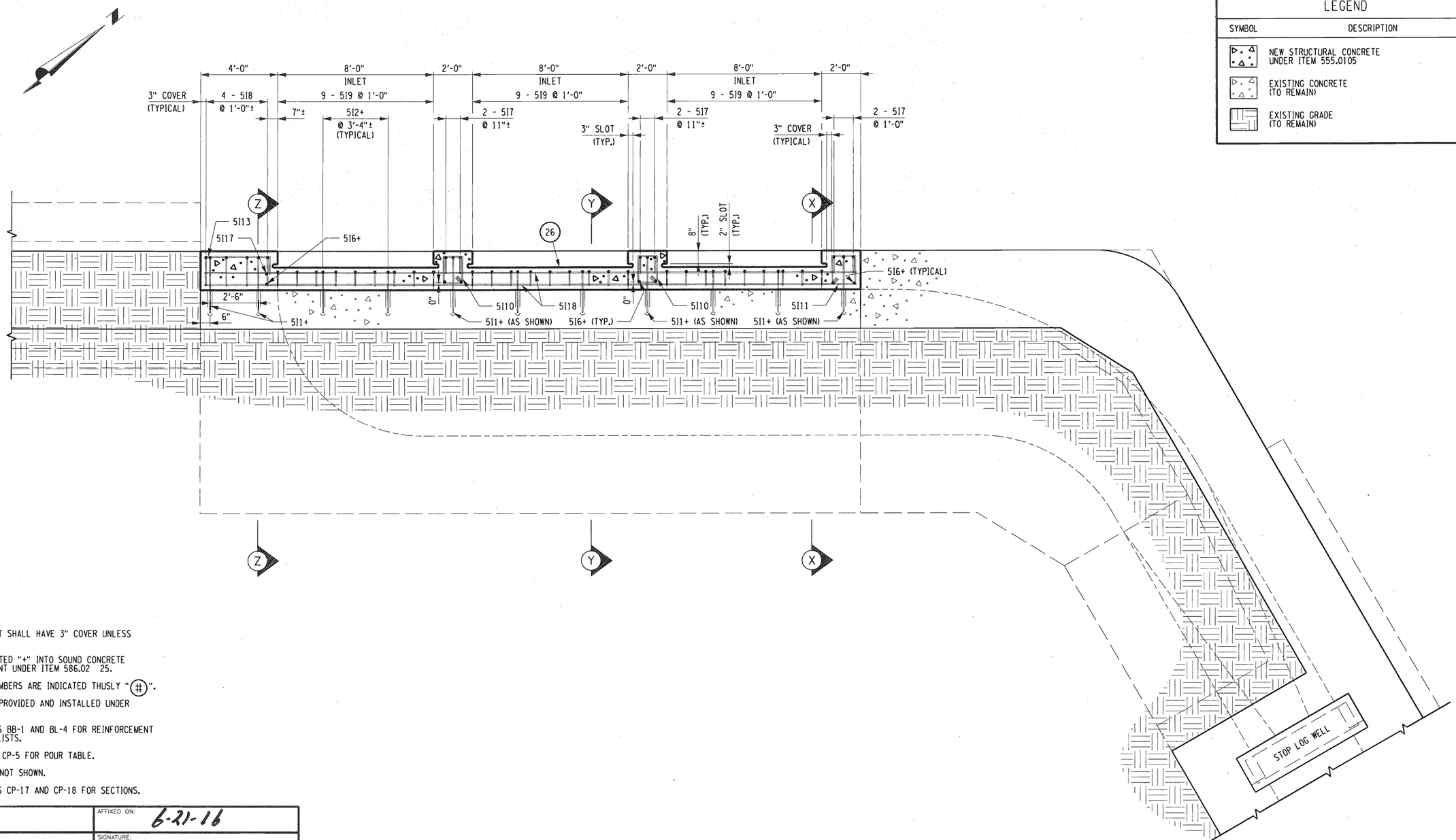

NOTES:

1. ALL REINFORCEMENT SHALL HAVE 3" COVER UNLESS OTHERWISE NOTED.
2. DRILL BARS INDICATED "+" INTO SOUND CONCRETE WITH 14" EMBEDMENT UNDER ITEM 586.02 25.
3. CONCRETE POUR NUMBERS ARE INDICATED THUSLY "(#)".
4. ALL REBAR TO BE PROVIDED AND INSTALLED UNDER ITEM 556.0201.
5. REFER TO DRAWINGS BB-1 AND BL-4 FOR REINFORCEMENT DETAILS AND BAR LISTS.
6. REFER TO DRAWING CP-5 FOR POUR TABLE.
7. FOUNDATION PILES NOT SHOWN.
8. REFER TO DRAWINGS CP-17 AND CP-18 FOR SECTIONS.

CONCRETE REPLACEMENT PLAN
SCALE: 3/8" = 1'-0"

ALTERED ON:	AFFIXED ON: 6-21-16
SIGNATURE: STAMP:	SIGNATURE: STAMP: STATE OF NEW YORK F. DAVID HUDDA 061048 LICENSED PROFESSIONAL ENGINEER

IT IS A VIOLATION OF LAW FOR ANY PERSON, UNLESS THEY ARE ACTING UNDER THE DIRECTION OF A LICENSED PROFESSIONAL ENGINEER, ARCHITECT, LANDSCAPE ARCHITECT, OR LAND SURVEYOR, TO ALTER AN ITEM IN ANY WAY. IF AN ITEM BEARING THE STAMP OF A LICENSED PROFESSIONAL IS ALTERED, THE ALTERING ENGINEER, ARCHITECT, LANDSCAPE ARCHITECT, OR LAND SURVEYOR SHALL STAMP THE DOCUMENT AND INCLUDE THE NOTATION "ALTERED BY" FOLLOWED BY THEIR SIGNATURE. THE DATE OF SUCH ALTERATION, AND A SPECIFIC DESCRIPTION OF THE ALTERATION.

REVISIONS

DATE	DESCRIPTION	BY	SYM.

NEW YORK STATE THRUWAY AUTHORITY
DEPARTMENT OF ENGINEERING
200 SOUTHERN BLVD., ALBANY, N.Y. 12209

TITLE OF PROJECT: LOCK E-32 BYPASS CULVERT REPAIR
LOCATION OF PROJECT: TOWN OF PITTSFORD MONROE COUNTY
TITLE OF DRAWING: CONCRETE AND REINFORCEMENT PLACEMENT DETAILS XVI

CONTRACT NUMBER: TAB 16-26C
DATE: 6/14/16
DRAWING NUMBER: CP-16

2016/B94058/Design/Plans/INLET CONCRETE REPAIRS.dgn
DRAFTED BY: J.S. LeBLANC
CHECKED BY: D. HUDDA
DESIGNED BY: J.S. LeBLANC
CHECKED BY: D. HUDDA
DESIGN SUPERVISOR: R. KARIS

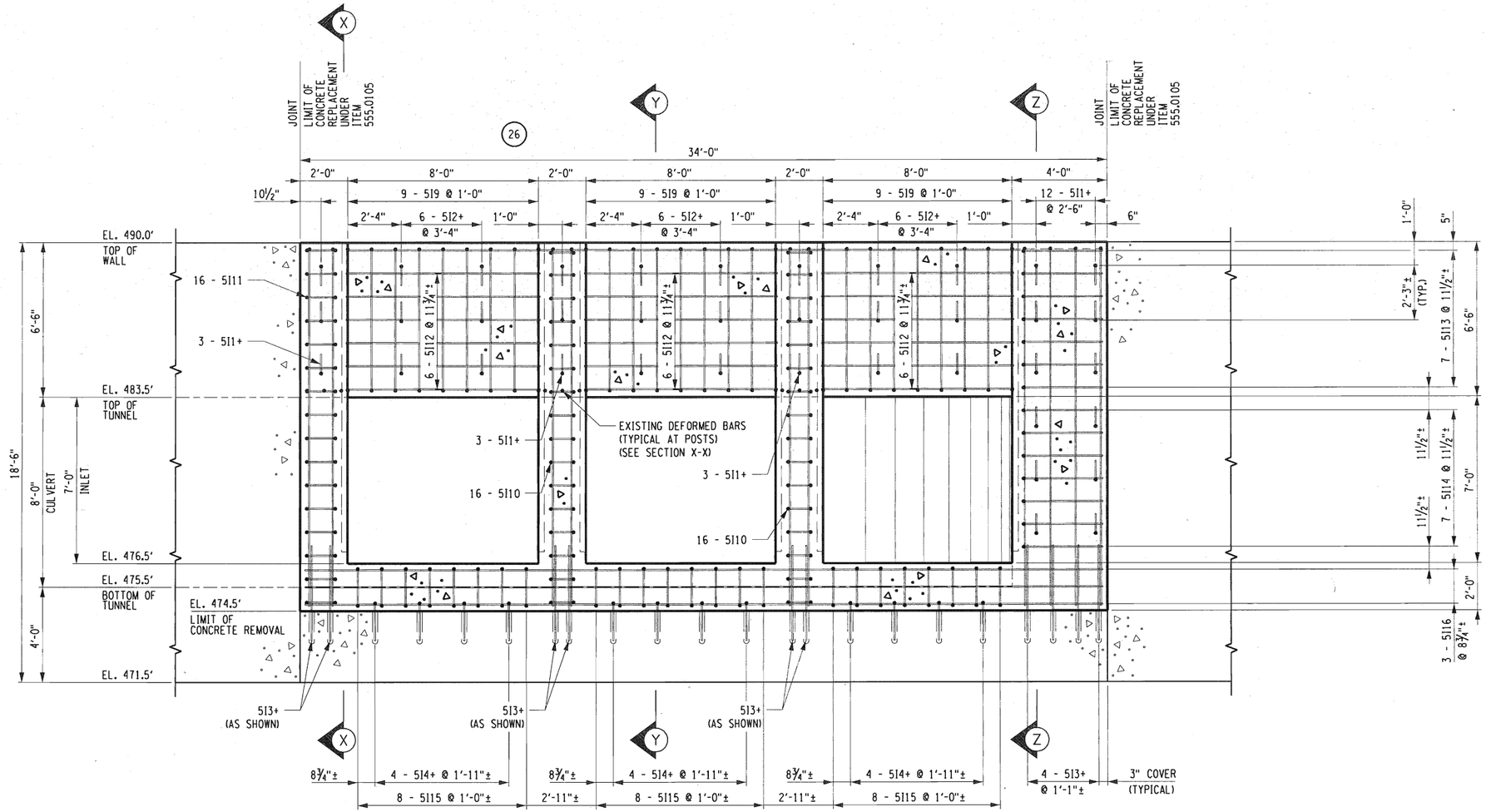

CONCRETE REPLACEMENT ELEVATION

SCALE: ⅜" = 1'-0"

LEGEND	
SYMBOL	DESCRIPTION
▷ △	NEW STRUCTURAL CONCRETE UNDER ITEM 555.0105
▷ △	EXISTING CONCRETE (TO REMAIN)

NOTES:

1. ALL REINFORCEMENT SHALL HAVE 3" COVER UNLESS OTHERWISE NOTED.
2. DRILL BARS INDICATED "+" INTO SOUND CONCRETE WITH 14" EMBEDMENT UNDER ITEM 586.02 25.
3. CONCRETE POUR NUMBERS ARE INDICATED THUSLY "(#)".
4. ALL REBAR TO BE PROVIDED AND INSTALLED UNDER ITEM 556.0201.
5. REFER TO DRAWINGS CP-17 AND CP-18 FOR SECTIONS.
6. REFER TO DRAWINGS BB-1 AND BL-4 FOR REINFORCEMENT DETAILS AND BAR LISTS.
7. REFER TO DRAWING CP-5 FOR POUR TABLE.
8. FOUNDATION PILES NOT SHOWN.
9. REFER TO DRAWINGS CP-17 AND CP-18 FOR SECTIONS.

ALTERED ON:	AFFIXED ON: 6-21-16
SIGNATURE: STAMP:	SIGNATURE: STAMP: STATE OF NEW YORK · F. DAVID HUDDA · 061048 · LICENSED PROFESSIONAL ENGINEER

IT IS A VIOLATION OF LAW FOR ANY PERSON, UNLESS THEY ARE ACTING UNDER THE DIRECTION OF A LICENSED PROFESSIONAL ENGINEER, ARCHITECT, LANDSCAPE ARCHITECT, OR LAND SURVEYOR, TO ALTER AN ITEM IN ANY WAY. IF AN ITEM BEARING THE STAMP OF A LICENSED PROFESSIONAL IS ALTERED, THE ALTERING ENGINEER, ARCHITECT, LANDSCAPE ARCHITECT, OR LAND SURVEYOR SHALL STAMP THE DOCUMENT AND INCLUDE THE NOTATION "ALTERED BY" FOLLOWED BY THEIR SIGNATURE. THE DATE OF SUCH ALTERATION, AND A SPECIFIC DESCRIPTION OF THE ALTERATION.

REVISIONS

DATE	DESCRIPTION	BY	SYM.

NEW YORK STATE THRUWAY AUTHORITY
DEPARTMENT OF ENGINEERING
200 SOUTHERN BLVD., ALBANY, N.Y. 12209

TITLE OF PROJECT: LOCK E-32 BYPASS CULVERT REPAIR
LOCATION OF PROJECT: TOWN OF PITTSFORD MONROE COUNTY
TITLE OF DRAWING: CONCRETE AND REINFORCEMENT PLACEMENT DETAILS XVII

CONTRACT NUMBER: TAB 16-26C
DATE: 6/14/16
DRAWING NUMBER: CP-17

2016/BB4058/Design/Plans/INLET CONCRETE REPAIRS.dgn
CHECKED BY: D. HUDDA
DRAFTED BY: J.S. LeBLANC
CHECKED BY: D. HUDDA
DESIGNED BY: J.S. LeBLANC
DESIGN SUPERVISOR: R. KARIS

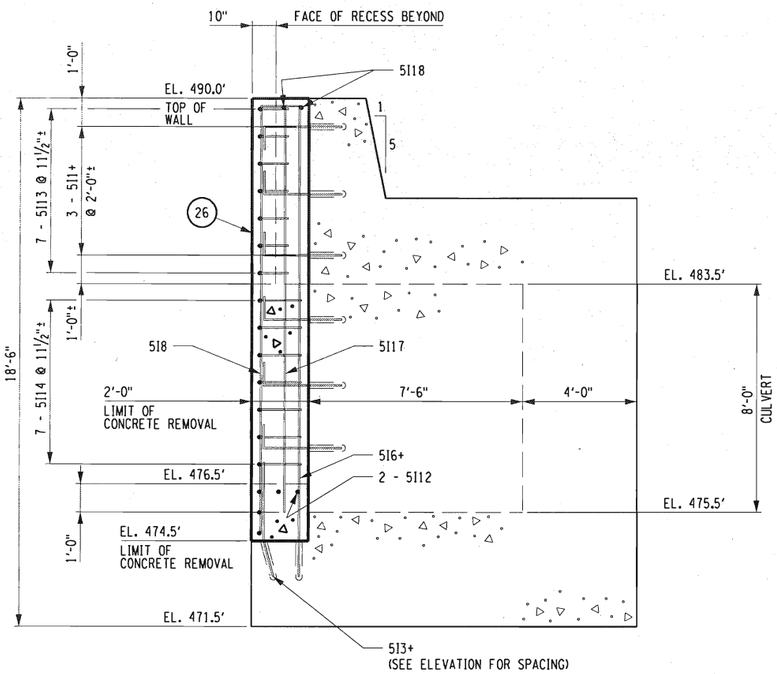

SECTION Z-Z
(SECTION AT SOUTH WALL)
SCALE: ⅜" = 1'-0"

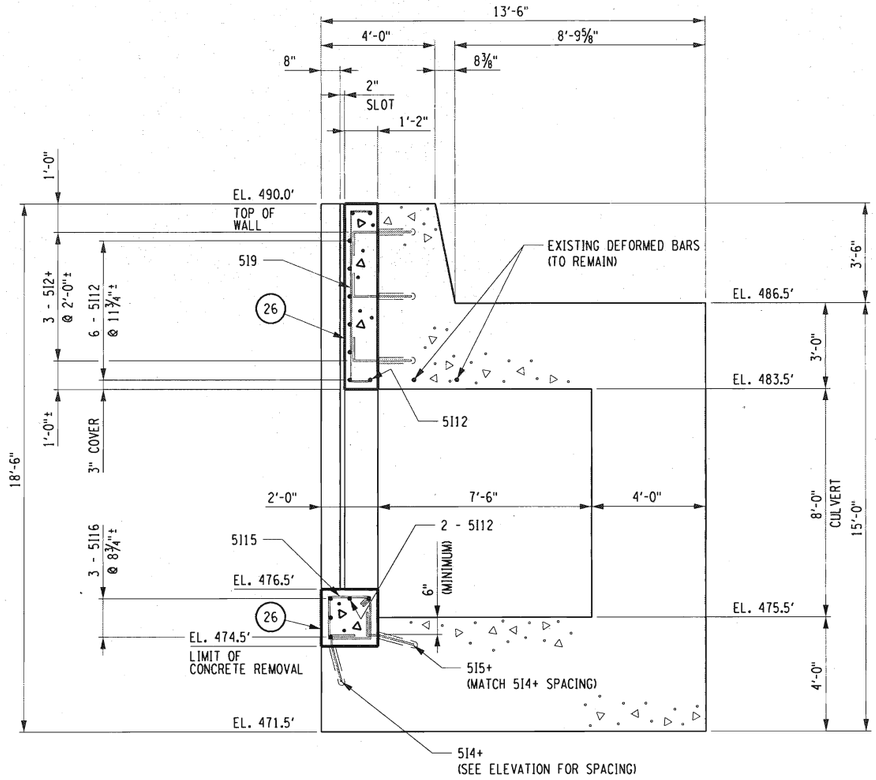

SECTION Y-Y
(TYPICAL SECTION BETWEEN POSTS)
SCALE: ⅜" = 1'-0"

LEGEND	
SYMBOL	DESCRIPTION
	NEW STRUCTURAL CONCRETE UNDER ITEM 555.0105
	EXISTING CONCRETE (TO REMAIN)

NOTES:

1. ALL REINFORCEMENT SHALL HAVE 3" COVER UNLESS OTHERWISE NOTED.
2. DRILL BARS INDICATED "+" INTO SOUND CONCRETE WITH 14" EMBEDMENT UNDER ITEM 586.02 25.
3. CONCRETE POUR NUMBERS ARE INDICATED THUSLY "(#)".
4. ALL REBAR TO BE PROVIDED AND INSTALLED UNDER ITEM 556.0201.
5. REFER TO DRAWINGS BB-1 AND BL-4 FOR REINFORCEMENT DETAILS AND BAR LISTS.
6. REFER TO DRAWING CP-5 FOR POUR TABLE.
7. FOUNDATION PILES NOT SHOWN.

ALTERED ON:	AFFIXED ON: 6-21-16
SIGNATURE: STAMP:	SIGNATURE: STAMP: STATE OF NEW YORK · F. DAVID HUDDA · 061048 · LICENSED PROFESSIONAL ENGINEER

IT IS A VIOLATION OF LAW FOR ANY PERSON, UNLESS THEY ARE ACTING UNDER THE DIRECTION OF A LICENSED PROFESSIONAL ENGINEER, ARCHITECT, LANDSCAPE ARCHITECT, OR LAND SURVEYOR, TO ALTER AN ITEM IN ANY WAY. IF AN ITEM BEARING THE STAMP OF A LICENSED PROFESSIONAL IS ALTERED, THE ALTERING ENGINEER, ARCHITECT, LANDSCAPE ARCHITECT, OR LAND SURVEYOR SHALL STAMP THE DOCUMENT AND INCLUDE THE NOTATION "ALTERED BY" FOLLOWED BY THEIR SIGNATURE. THE DATE OF SUCH ALTERATION, AND A SPECIFIC DESCRIPTION OF THE ALTERATION.

REVISIONS

DATE	DESCRIPTION	BY	SYM.

NEW YORK STATE THRUWAY AUTHORITY
DEPARTMENT OF ENGINEERING
200 SOUTHERN BLVD., ALBANY, N.Y. 12209

TITLE OF PROJECT: LOCK E-32 BYPASS CULVERT REPAIR
LOCATION OF PROJECT: TOWN OF PITTSFORD MONROE COUNTY
TITLE OF DRAWING: CONCRETE AND REINFORCEMENT PLACEMENT DETAILS XVIII

CONTRACT NUMBER: TAB 16-26C
DATE: 6/14/16
DRAWING NUMBER: CP-18

2016/B94058/Design/Plans/INLET CONCRETE REPAIRS.dgn
DRAFTED BY: J.S. LeBLANC
CHECKED BY: D. HUDDA
DESIGNED BY: J.S. LeBLANC
CHECKED BY: D. HUDDA
DESIGN SUPERVISOR: R. KARIS

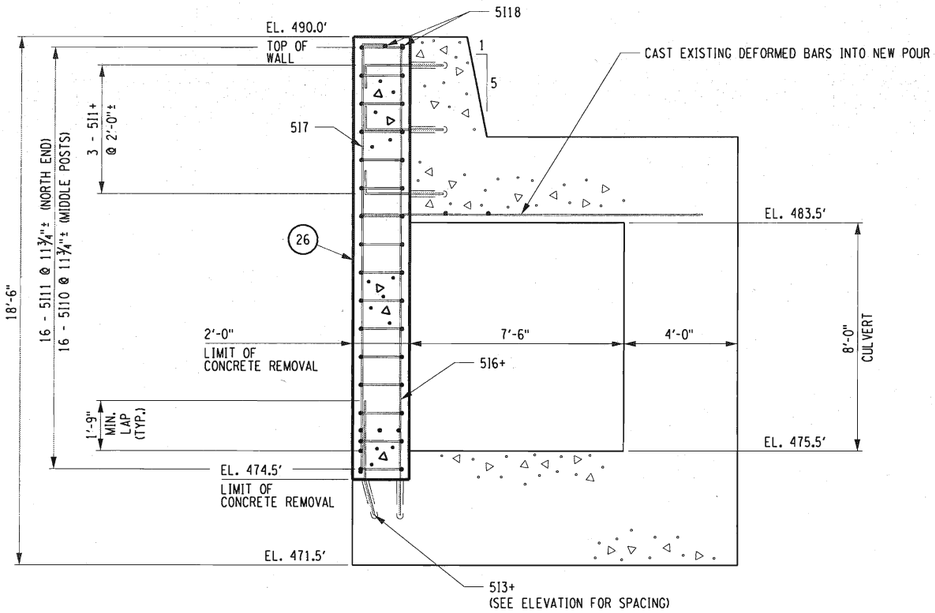

SECTION X-X
(SECTION AT NORTH JOINT POST)
(SECTION AT MIDDLE POSTS SIMILAR)
SCALE: ⅜" = 1'-0"

LEGEND	
SYMBOL	DESCRIPTION
	NEW STRUCTURAL CONCRETE UNDER ITEM 555.0105
	EXISTING CONCRETE (TO REMAIN)

NOTES:

1. ALL REINFORCEMENT SHALL HAVE 3" COVER UNLESS OTHERWISE NOTED.
2. DRILL BARS INDICATED "+" INTO SOUND CONCRETE WITH 14" EMBEDMENT UNDER ITEM 586.02 25.
3. CONCRETE POUR NUMBERS ARE INDICATED THUSLY "(#)".
4. ALL REBAR TO BE PROVIDED AND INSTALLED UNDER ITEM 556.0201.
5. REFER TO DRAWINGS BB-1 AND BL-4 FOR REINFORCEMENT DETAILS AND BAR LISTS.
6. REFER TO DRAWING CP-5 FOR POUR TABLE.
7. FOUNDATION PILES NOT SHOWN.

ALTERED ON:	AFFIXED ON: 6-24-16
SIGNATURE: STAMP:	SIGNATURE: STAMP: STATE OF NEW YORK · F. DAVID HUDDA · 061048 · LICENSED PROFESSIONAL ENGINEER

IT IS A VIOLATION OF LAW FOR ANY PERSON, UNLESS THEY ARE ACTING UNDER THE DIRECTION OF A LICENSED PROFESSIONAL ENGINEER, ARCHITECT, LANDSCAPE ARCHITECT, OR LAND SURVEYOR, TO ALTER AN ITEM IN ANY WAY. IF AN ITEM BEARING THE STAMP OF A LICENSED PROFESSIONAL IS ALTERED, THE ALTERING ENGINEER, ARCHITECT, LANDSCAPE ARCHITECT, OR LAND SURVEYOR SHALL STAMP THE DOCUMENT AND INCLUDE THE NOTATION "ALTERED BY" FOLLOWED BY THEIR SIGNATURE. THE DATE OF SUCH ALTERATION, AND A SPECIFIC DESCRIPTION OF THE ALTERATION.

REVISIONS

DATE	DESCRIPTION	BY	SYM.

NEW YORK STATE THRUWAY AUTHORITY
DEPARTMENT OF ENGINEERING
200 SOUTHERN BLVD., ALBANY, N.Y. 12209

TITLE OF PROJECT: LOCK E-32 BYPASS CULVERT REPAIR
LOCATION OF PROJECT: TOWN OF PITTSFORD MONROE COUNTY
TITLE OF DRAWING: CONCRETE AND REINFORCEMENT PLACEMENT DETAILS IXX

CONTRACT NUMBER: TAB 16-26C
DATE: 6/14/16
DRAWING NUMBER: CP-19

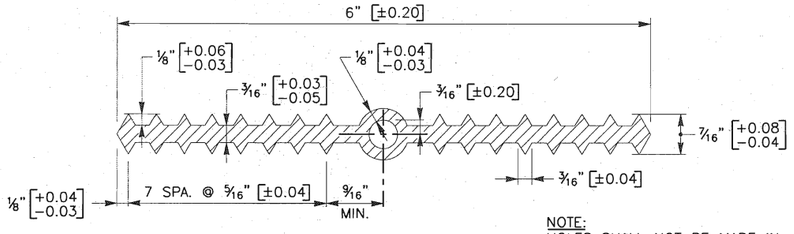

NOTE:
HOLES SHALL NOT BE MADE IN WATERSTOP FOR ANY PURPOSE.

TYPE A WATERSTOP

NOT TO SCALE

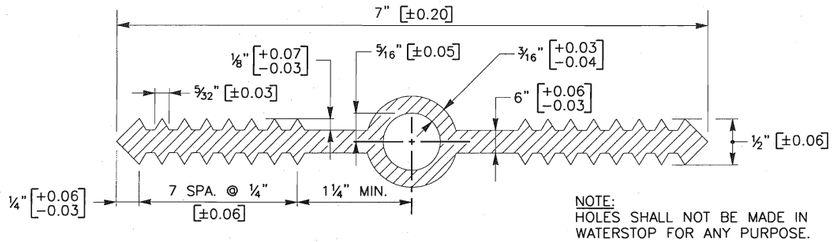

NOTE:
HOLES SHALL NOT BE MADE IN WATERSTOP FOR ANY PURPOSE.

TYPE B WATERSTOP

NOT TO SCALE

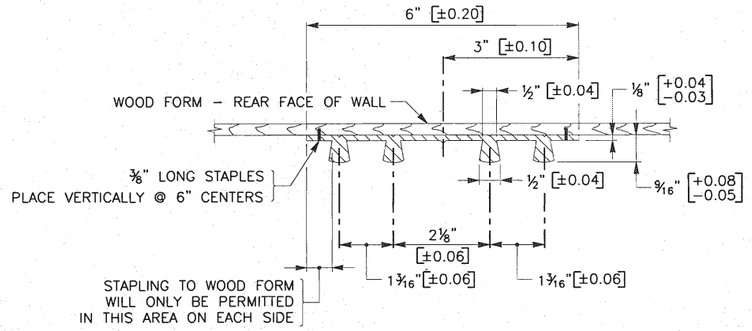

TYPE D WATERSTOP

(CONSTRUCTION AND CONTRACTION JOINTS)
NOT TO SCALE

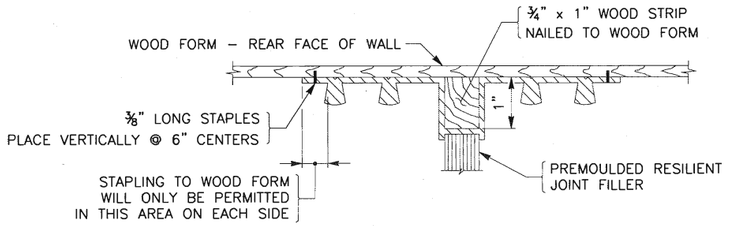

STAGE ONE – PRIOR TO POURING CONCRETE

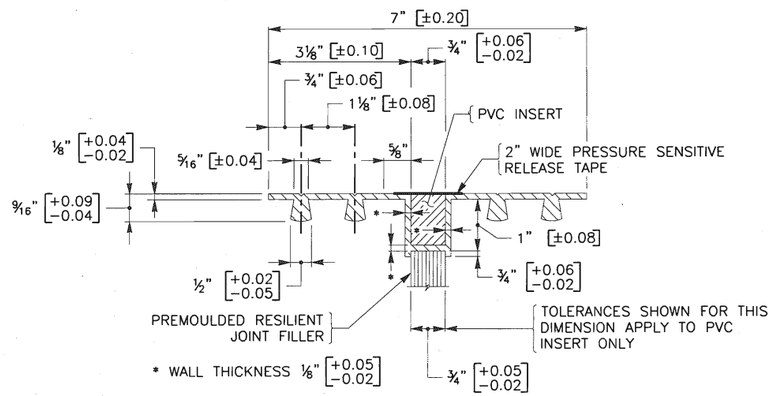

STAGE TWO – AFTER FORMS HAVE BEEN REMOVED

TYPE E WATERSTOP

(EXPANSION JOINTS)
NOT TO SCALE

WATERSTOP NOTES:

1. HOLES SHALL NOT BE MADE IN WATERSTOP FOR ANY PURPOSE EXCEPT AS REQUIRED FOR STAPLING TO FORMS.
2. TYPE D WATERSTOP, TYPE E WATERSTOP AND PVC INSERT SHALL BE LIGHT GRAY IN COLOR.
3. PVC INSERT SHALL BE CLOSED CELL POLYVINYL (SP) GRADE VE–45 AS PER ASTM D1667 OR CLOSED CELL RUBBER GRADE RE–45, CLASS E, AS PER ASTM D1056.
4. PVC INSERT AND PRESSURE SENSITIVE RELEASE TAPE SHALL BE INSTALLED IN THE FIELD PRIOR TO PLACING THE BACKFILL.
5. THE COST OF FURNISHING AND PLACING WATERSTOPS SHALL BE INCLUDED IN THE UNIT PRICES BID FOR THE CONCRETE ITEMS.
6. FIELD SPLICES SHOULD BE AVOIDED IF POSSIBLE, HOWEVER, HEAT WELDED BUTT SPLICES WILL BE PERMITTED ON LONG STRAIGHT RUNS (GENERALLY IN EXCESS OF 50 FEET) AT POINTS APPROVED BY THE ENGINEER.
7. WATERSTOP SHALL BE SHIPPED IN STRAIGHT SECTIONS HAVING A MINIMUM LENGTH OF 10 FEET UNLESS SHORTER LENGTHS ARE REQUIRED.
8. PREMOULDED RESILIENT JOINT FILLER SHALL CONFORM TO THE REQUIREMENTS OF N.Y.S. STANDARD SPECIFICATION SUBSECTION 705–07.
9. PVC USED IN WATERSTOPS SHALL CONFORM TO THE REQUIREMENTS OF N.Y.S. STANDARD SPECIFICATIONS SUBSECTION 705–11.
10. USE TYPE A WATERSTOP AT CONSTRUCTION JOINTS WHERE TYPE D CANNOT BE USED.
11. USE TYPE B WATERSTOP AT EXPANSION JOINTS WHERE TYPE E CANNOT BE USED.
12. ALLOWABLE SIZE TOLERANCES ARE SHOWN IN BRACKETS FOLLOWING EACH DIMENSION.

DESIGN SUPERVISOR: R. KARIS
DESIGNED BY: J.S. LeBLANC
DRAFTED BY: J.S. LeBLANC
CHECKED BY: D. HUDDA
CHECKED BY: D. HUDDA
2016\284058\Design\Plans\WATERSTOPS.dgn

ALTERED ON:	AFFIXED ON: 6-21-16
SIGNATURE: STAMP:	SIGNATURE: STAMP: STATE OF NEW YORK · F. DAVID HUDDA · 061048 · LICENSED PROFESSIONAL ENGINEER

IT IS A VIOLATION OF LAW FOR ANY PERSON, UNLESS THEY ARE ACTING UNDER THE DIRECTION OF A LICENSED PROFESSIONAL ENGINEER, ARCHITECT, LANDSCAPE ARCHITECT, OR LAND SURVEYOR, TO ALTER AN ITEM IN ANY WAY. IF AN ITEM BEARING THE STAMP OF A LICENSED PROFESSIONAL IS ALTERED, THE ALTERING ENGINEER, ARCHITECT, LANDSCAPE ARCHITECT, OR LAND SURVEYOR SHALL STAMP THE DOCUMENT AND INCLUDE THE NOTATION "ALTERED BY" FOLLOWED BY THEIR SIGNATURE, THE DATE OF SUCH ALTERATION, AND A SPECIFIC DESCRIPTION OF THE ALTERATION.

REVISIONS

DATE	DESCRIPTION	BY	SYM.

NEW YORK STATE THRUWAY AUTHORITY
DEPARTMENT OF ENGINEERING
200 SOUTHERN BLVD., ALBANY, N.Y. 12209

TITLE OF PROJECT: LOCK E–32 BYPASS CULVERT REPAIR
LOCATION OF PROJECT: TOWN OF PITTSFORD MONROE COUNTY
TITLE OF DRAWING: WATERSTOPS
CONTRACT NUMBER: TAB 16–26C
DATE: 6/14/16
DRAWING NUMBER: CP–20

2016/594058/Design/Plans/CULVERT GROUTING REPAIRS.dgn
DRAFTED BY: J.S. LeBLANC
CHECKED BY: D. HUDDA
DESIGNED BY: J.S. LeBLANC
CHECKED BY: D. HUDDA
DESIGN SUPERVISOR: R. KARIS

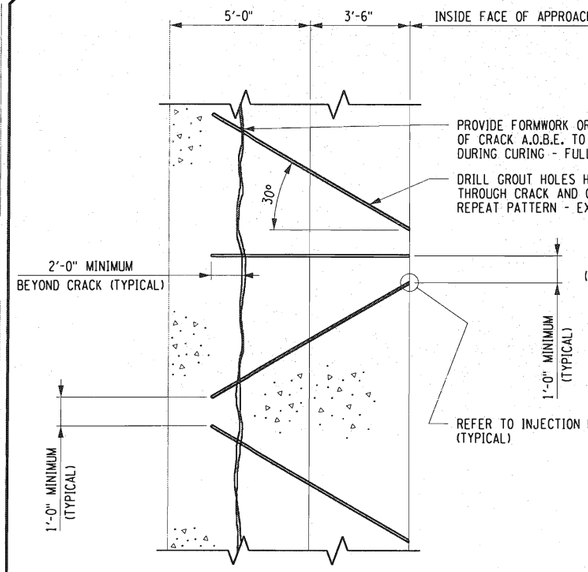

PLAN OF TUNNEL CEILING

DETAIL 1
NOT TO SCALE

NOTES:

1. REFER TO DRAWING GP-1 FOR INLET TUNNEL CEILING GROUTING LOCATIONS. THE EXACT LIMITS OF CEILING CRACKS TO BE REPAIRED WILL BE A.O.B.E. THE APPROXIMATE CONTINUOUS LENGTH OF CRACK TO BE FILLED WITH GROUT IS 165.5 FEET, WITH AN APPROXIMATE VOLUME OF 14 CUBIC FEET.
2. UPON COMPLETION OF DEWATERING OPERATIONS, THE ENGINEER, THE CONTRACTOR, AND A CANAL CORPORATION REPRESENTATIVE SHALL INSPECT THE CULVERT TO DETERMINE THE LIMITS OF CRACK REPAIRS, AND NUMBER AND LOCATION OF HORIZONTAL JOINT REPAIRS AND BRICK VOID REPAIRS TO BE PERFORMED. THE CONTRACTOR SHALL NOT EXTEND REPAIRS BEYOND THE SPECIFIED LIMITS OR LOCATIONS WITHOUT SPECIFIC WRITTEN PERMISSION FROM THE ENGINEER. ADDITIONAL PAYMENT WILL NOT BE MADE FOR GROUTING OPERATIONS EXTENDING BEYOND THE SPECIFIED LIMITS.
3. REFER TO THE SPECIFICATION FOR ITEM 665.2575 12 FOR DETAILS REGARDING SPECIFIC DRILLING OPERATIONS.
4. SEE THE SPECIFICATION FOR ITEM 665.25760125 FOR GENERAL BATCHING, MIXING, AND INJECTING PROCEDURES FOR POLYURETHANE GROUT.
5. FILL CRACKS TO A MAXIMUM OF 1/4" WIDTH WITH JOINT SEALER AT INJECTION PORT UNDER ITEM 665.25760125.
6. FILL CRACKS BETWEEN 1/4" AND 1" IN WIDTH WITH JOINT FILLER AT INJECTION PORT UNDER ITEM 665.25760125.
7. WATER USED TO CLEAN DRILLED HOLES AND PREPARE GROUT MIX SHALL CONFORM TO SECTION 712-01 OF THE STANDARD SPECIFICATIONS. THE USE OF CANAL WATER FOR SUCH PURPOSES WILL NOT BE PERMITTED.
8. THE MONOLITH JOINTS, HORIZONTAL JOINTS, GROUT HOLES, CEILING CRACKS AND SURROUNDING AREAS SHALL BE MONITORED CONTINOUSLY DURING GROUTING OPERATIONS TO DETERMINE THE EXTENT OF GROUT PENETRATION.
9. REFER TO DRAWING CG-2 FOR BRICK VOID REPAIR DETAIL.

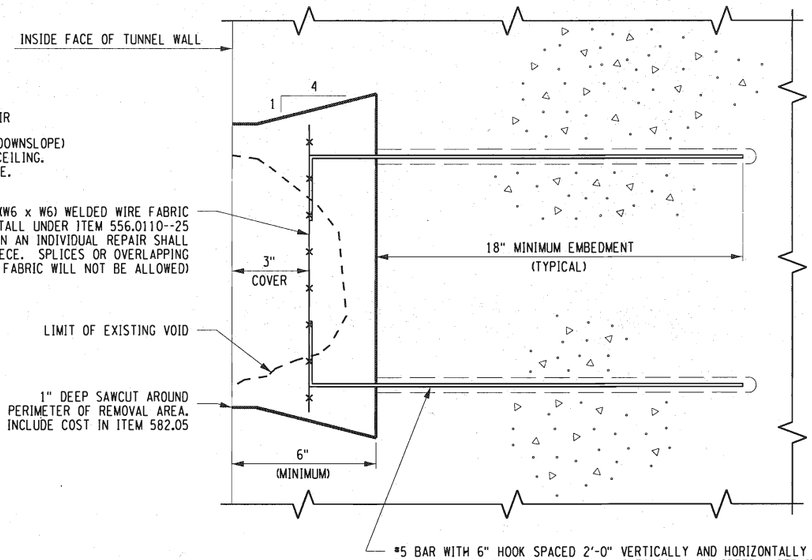

PLAN OF HORIZONTAL JOINT REPAIR

REPAIR PROCEDURE:

1. PERFORM 1" DEEP SAWCUT AROUND PERIMETER OF CONCRETE REMOVAL AREA.
2. REMOVE ALL UNSOUND CONCRETE. DOVETAIL SIDES AND BOTTOM OF REPAIR TO PROVIDE A LARGER BASE CAVITY. TOP EDGE SHALL BE LEVEL TO AVOID AIR ENTRAPMENT IN VERTICAL FACE REPAIR.
3. SANDBLAST CLEAN ALL NEWLY EXPOSED CONCRETE SURFACES OF REPAIR AREA.
4. INSTALL #5 REBAR AND WELDED WIRE FABRIC AS ILLUSTRATED. DRILL AND GROUT BARS INTO SOUND CONCRETE.
5. REPAIR VOID WITH CLASS A CONCRETE UNDER ITEM 582.05.
6. FINISHED SURFACE SHALL BE FLUSH WITH WALLS AND CEILING OF TUNNEL.
7. FOR THE PURPOSE OF ESTIMATION, IT SHALL BE ASSUMED THAT 10 SUCH REPAIRS WILL BE REQUIRED. ACTUAL NUMBER AND LOCATION OF REPAIRS IS A.O.B.E.

DETAIL 2
NOT TO SCALE

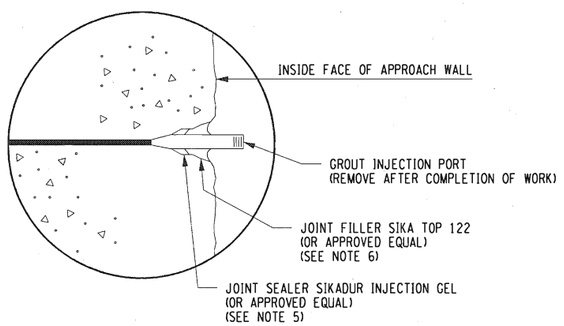

INJECTION PORT DETAIL
NOT TO SCALE

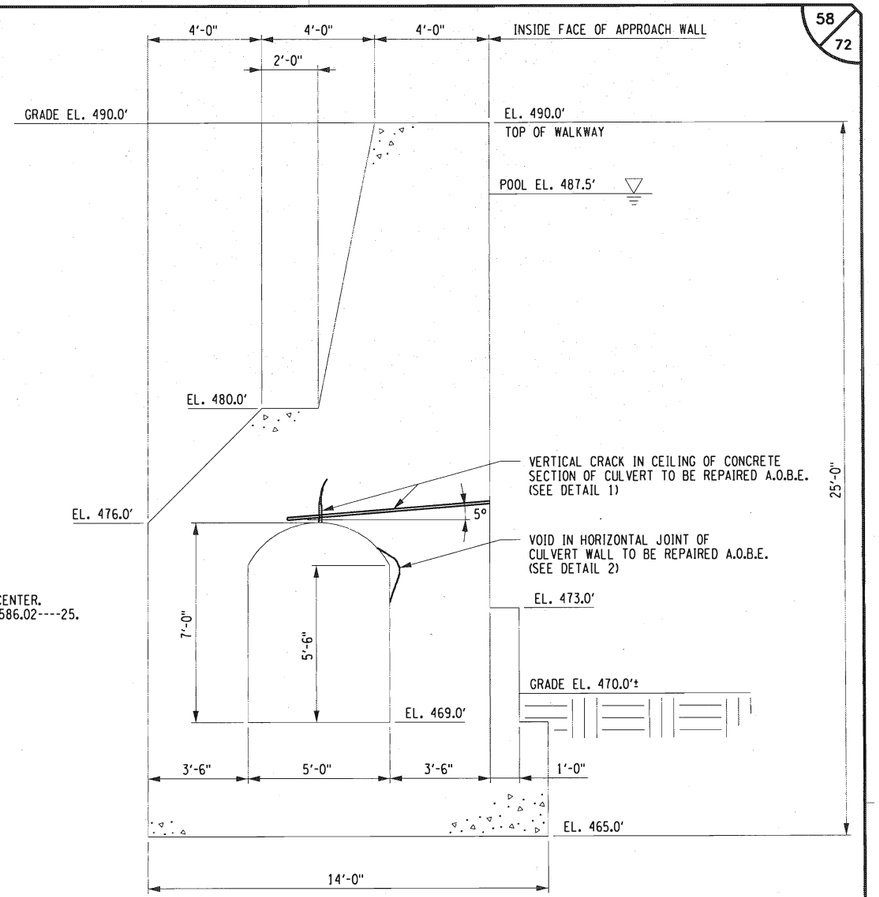

SECTION B-B
(TYPICAL BYPASS CULVERT GROUTING REPAIRS A.O.B.E.)
SCALE: 3/8" = 1'-0"

ALTERED ON:	AFFIXED ON: 6-23-16
SIGNATURE: STAMP:	SIGNATURE: STAMP:

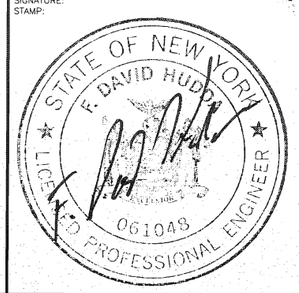

IT IS A VIOLATION OF LAW FOR ANY PERSON, UNLESS THEY ARE ACTING UNDER THE DIRECTION OF A LICENSED PROFESSIONAL ENGINEER, ARCHITECT, LANDSCAPE ARCHITECT, OR LAND SURVEYOR, TO ALTER AN ITEM IN ANY WAY. IF AN ITEM BEARING THE STAMP OF A LICENSED PROFESSIONAL IS ALTERED, THE ALTERING ENGINEER, ARCHITECT, LANDSCAPE ARCHITECT, OR LAND SURVEYOR SHALL STAMP THE DOCUMENT AND INCLUDE THE NOTATION "ALTERED BY" FOLLOWED BY THEIR SIGNATURE. THE DATE OF SUCH ALTERATION, AND A SPECIFIC DESCRIPTION OF THE ALTERATION.

REVISIONS

DATE	DESCRIPTION	BY	SYM.

NEW YORK STATE THRUWAY AUTHORITY
DEPARTMENT OF ENGINEERING
200 SOUTHERN BLVD., ALBANY, N.Y. 12209

TITLE OF PROJECT: LOCK E-32 BYPASS CULVERT REPAIR
LOCATION OF PROJECT: TOWN OF PITTSFORD MONROE COUNTY
TITLE OF DRAWING: CULVERT GROUTING DETAILS

CONTRACT NUMBER: TAB 16-26C
DATE: 6/23/16
DRAWING NUMBER: CG-1

2016/B94058/Design/Plans/CULVERT GROUTING REPAIRS.dgn
CHECKED BY: D. HUDDA
DRAFTED BY: J.S. LeBLANC
CHECKED BY: D. HUDDA
DESIGNED BY: J.S. LeBLANC
DESIGN SUPERVISOR: R. KARIS

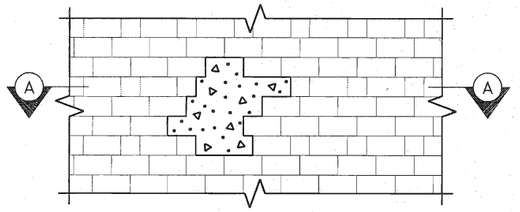

ELEVATION OF TUNNEL WALL

REPAIR PROCEDURE:

1. REMOVE ALL LOOSE MORTAR AND CONCRETE DEBRIS FROM REPAIR AREA USING MANUAL METHODS TO AVOID CAUSING ADDITIONAL DAMAGE TO INTENDED REPAIR AREA. CONCRETE REMOVAL SHALL BE LIMITED TO THAT NECESSARY TO FACILITATE THE REPAIRS.
2. PLACE REINFORCEMENT IF NECESSARY, IN ACCORDANCE WITH NOTE 2.
3. PLACE CONCRETE.
4. TROWEL FINISHED SURFACE FLUSH WITH SURROUNDING BRICK LINING.
5. FOR THE PURPOSE OF ESTIMATION, IT SHALL BE ASSUMED THAT 40 CUBIC FEET OF CONCRETE WILL NEED TO BE PLACED AS PART OF THIS REPAIR WORK.

BRICK VOID REPAIR DETAIL
NOT TO SCALE

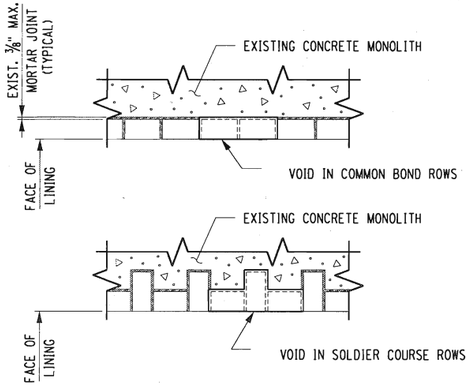

SECTION A-A
NOT TO SCALE

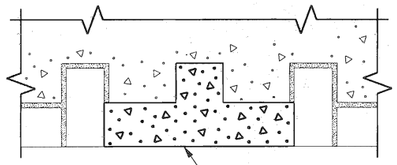

BRICK VOID IN SOLDIER COURSE ROW.
REPAIR WITH CLASS D CONCRETE, NO REINFORCEMENT.
ITEM 582.06 - REMOVE CONCRETE, REPLACE WITH CLASS D

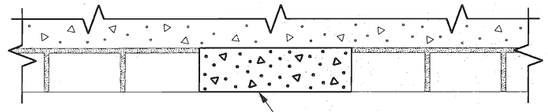

BRICK VOID IN COMMON BOND ROW.
REPAIR WITH CLASS D CONCRETE, NO REINFORCEMENT.
ITEM 582.06 - REMOVE CONCRETE, REPLACE WITH CLASS D

FOR VERTICAL SURFACE REPAIR, AREA LESS THAN 10 SQUARE FEET

DETAIL 1
NOT TO SCALE

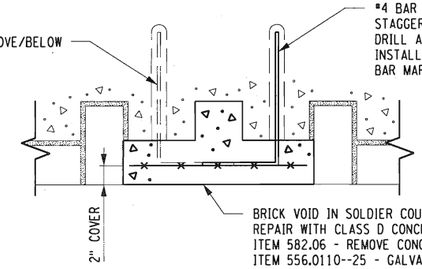

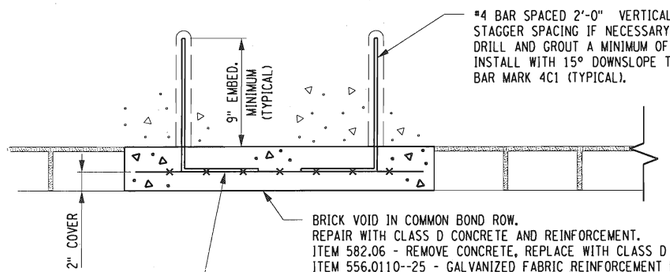

FOR VERTICAL SURFACE REPAIR, AREA GREATER THAN 10 SQUARE FEET OR CEILING

DETAIL 2
NOT TO SCALE

NOTES:

1. REFER TO NOTES ON DRAWING CG-1.
2. WHEN THE AREA OF A BRICK VOID EXCEEDS 10 SQUARE FEET, INSTALL REBAR AND WELDED WIRE FABRIC AS ILLUSTRATED IN DETAIL 2. FOR AREAS LESS THAN 10 SQUARE FEET, USE DETAIL 1.
3. WHERE A BRICK VOID OCCURS IN THE CEILING OF THE CULVERT, USE DETAIL 2 TO PROVIDE ADEQUATE SUPPORT FOR THE REPAIR, REGARDLESS OF THE SURFACE AREA MEASURED.
4. THE ENGINEER MAY REQUIRE DETAIL 2 TO BE USED IN ANY LOCATION IN PLACE OF DETAIL 1 WHEN THE ENGINEER DETERMINES THAT THE PROPORTIONS OF THE VOID REQUIRE ADDITIONAL STABILIZATION AND REINFORCEMENT.

ALTERED ON:	AFFIXED ON: 6-21-16
SIGNATURE: STAMP:	SIGNATURE: STAMP: STATE OF NEW YORK · F. DAVID HUDDA · 061048 · LICENSED PROFESSIONAL ENGINEER

IT IS A VIOLATION OF LAW FOR ANY PERSON, UNLESS THEY ARE ACTING UNDER THE DIRECTION OF A LICENSED PROFESSIONAL ENGINEER, ARCHITECT, LANDSCAPE ARCHITECT, OR LAND SURVEYOR, TO ALTER AN ITEM IN ANY WAY. IF AN ITEM BEARING THE STAMP OF A LICENSED PROFESSIONAL IS ALTERED, THE ALTERING ENGINEER, ARCHITECT, LANDSCAPE ARCHITECT, OR LAND SURVEYOR SHALL STAMP THE DOCUMENT AND INCLUDE THE NOTATION "ALTERED BY" FOLLOWED BY THEIR SIGNATURE. THE DATE OF SUCH ALTERATION, AND A SPECIFIC DESCRIPTION OF THE ALTERATION.

REVISIONS

DATE	DESCRIPTION	BY	SYM.

NEW YORK STATE THRUWAY AUTHORITY
DEPARTMENT OF ENGINEERING
200 SOUTHERN BLVD., ALBANY, N.Y. 12209

TITLE OF PROJECT: LOCK E-32 BYPASS CULVERT REPAIR
LOCATION OF PROJECT: TOWN OF PITTSFORD MONROE COUNTY
TITLE OF DRAWING: BRICK VOID REPAIR DETAILS

CONTRACT NUMBER: TAB 16-26C
DATE: 6/15/16
DRAWING NUMBER: CG-2

2016/BB4058/Design/Plans/APPROACH WALL RESURFACING.dgn
DRAFTED BY: J.S. LeBLANC
CHECKED BY: D. HUDDA
DESIGNED BY: J.S. LeBLANC
CHECKED BY: D. HUDDA
DESIGN SUPERVISOR: R. KARIS

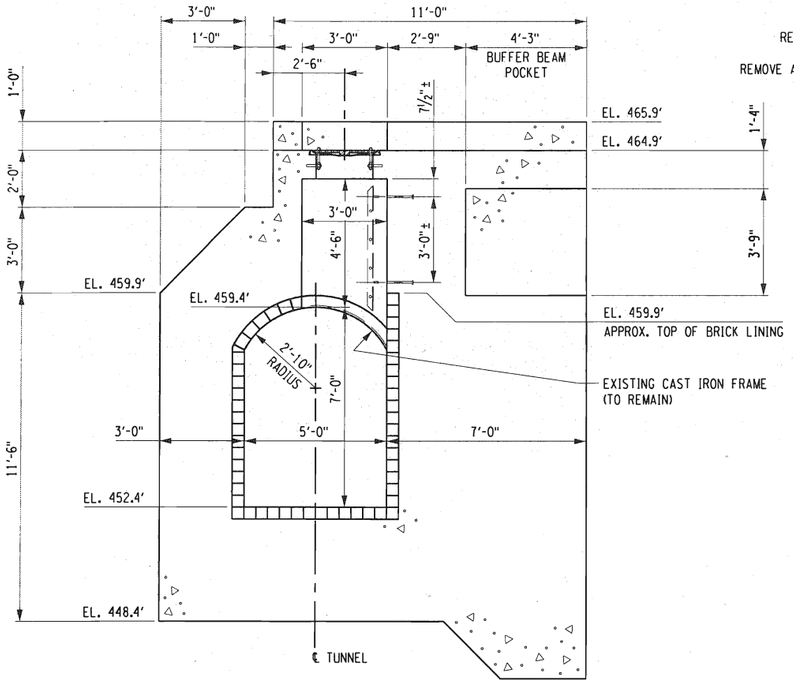

APPROACH WALL SECTION AT MANHOLE CENTERLINE
(APPROXIMATE STATION 2153+98)
SCALE: ⅜" = 1'-0"

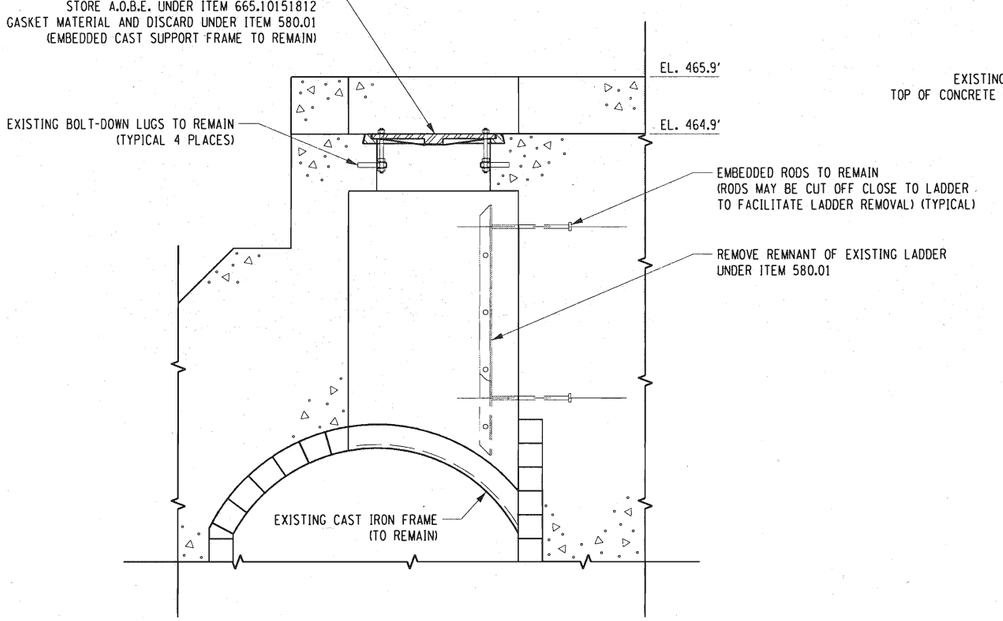

ELEMENT REMOVAL SECTION
SCALE: ¾" = 1'-0"

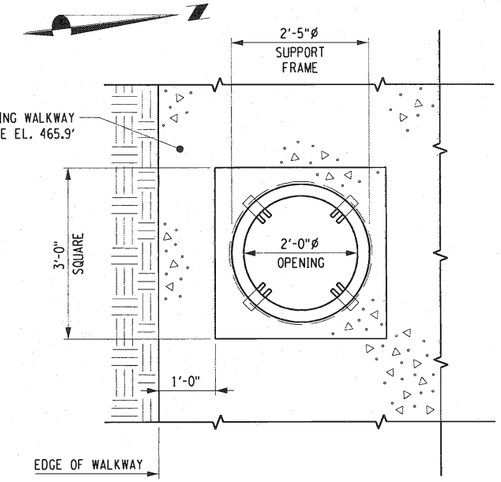

PLAN AT TOP OF WALKWAY
(MANHOLE COVER REMOVED)
SCALE: ¾" = 1'-0"

NOTES;

1. THESE DETAILS WERE PRODUCED USING RECORD PLANS. THE CONTRACTOR SHALL VERIFY FIELD ELEVATIONS AND DIMENSIONS BEFORE PROCEDING WITH FIELD WORK.
2. CONCRETE POUR NUMBERS ARE INDICATED THUSLY "(#)".
3. ALL REINFORCEMENT SHALL HAVE 3" COVER UNLESS OTHERWISE NOTED.
4. DRILL BARS INDICATED "+" INTO SOUND CONCRETE WITH 14" EMBEDMENT UNDER ITEM 586.02----25.
5. ALL REBAR TO BE PROVIDED AND INSTALLED UNDER ITEM 556.0201.
6. REFER TO DRAWINGS BB-1 AND BL-4 FOR REINFORCEMENT DETAILS AND BAR LISTS.
7. CONCRETE AT TOP OF PLUG SHALL BE STRUCK-OFF AT ELEVATION 465.9' AND LEFT WITH A "BROOM" FINISH.
8. REFER TO DRAWING CP-5 FOR POUR TABLE.
9. SEE DRAWING MA-2 FOR SECTION A-A.
10. GALVANIZED WELDED WIRE FABRIC SHALL BE FURNISHED AND INSTALLED UNDER ITEM 556.0110--25. WELDED WIRE FABRIC SHALL BE A SINGLE PIECE IN EACH SEPARATE REPAIR. SPLICES OR OVERLAPPING WILL NOT BE ALLOWED.

LEGEND	
SYMBOL	DESCRIPTION
	NEW STRUCTURAL CONCRETE UNDER ITEM 555.0105
	EXISTING CONCRETE (TO REMAIN)

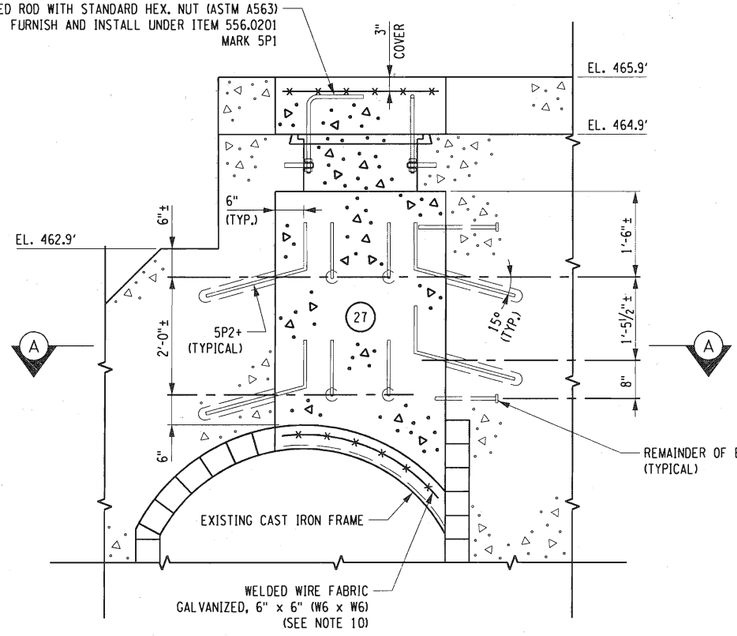

REPLACEMENT SECTION
SCALE: ¼" = 1'-0"

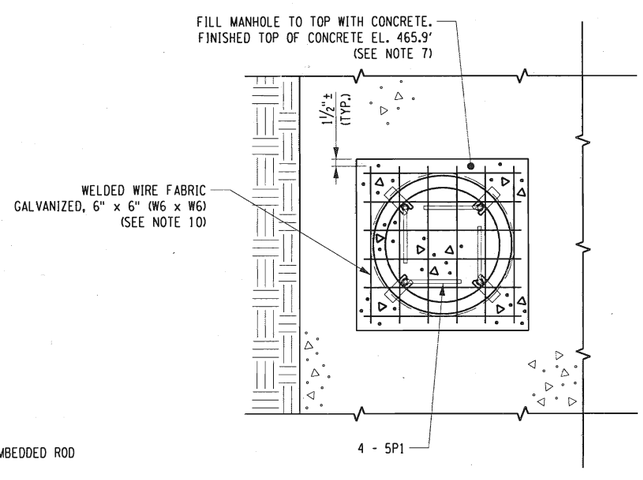

REPLACEMENT PLAN
SCALE: ¾" = 1'-0"

ALTERED ON:	AFFIXED ON: 6-21-16
SIGNATURE: STAMP:	SIGNATURE: STAMP: STATE OF NEW YORK F. DAVID HUDDA 061048 LICENSED PROFESSIONAL ENGINEER

IT IS A VIOLATION OF LAW FOR ANY PERSON, UNLESS THEY ARE ACTING UNDER THE DIRECTION OF A LICENSED PROFESSIONAL ENGINEER, ARCHITECT, LANDSCAPE ARCHITECT, OR LAND SURVEYOR, TO ALTER AN ITEM IN ANY WAY. IF AN ITEM BEARING THE STAMP OF A LICENSED PROFESSIONAL IS ALTERED, THE ALTERING ENGINEER, ARCHITECT, LANDSCAPE ARCHITECT, OR LAND SURVEYOR SHALL STAMP THE DOCUMENT AND INCLUDE THE NOTATION "ALTERED BY" FOLLOWED BY THEIR SIGNATURE. THE DATE OF SUCH ALTERATION, AND A SPECIFIC DESCRIPTION OF THE ALTERATION.

REVISIONS

DATE	DESCRIPTION	BY	SYM.

NEW YORK STATE THRUWAY AUTHORITY
DEPARTMENT OF ENGINEERING
200 SOUTHERN BLVD., ALBANY, N.Y. 12209

TITLE OF PROJECT: LOCK E-32 BYPASS CULVERT REPAIR
LOCATION OF PROJECT: TOWN OF PITTSFORD MONROE COUNTY
TITLE OF DRAWING: MANHOLE ABANDONMENT AND PLUGGING DETAILS I

CONTRACT NUMBER: TAB 16-26C
DATE: 6/14/16
DRAWING NUMBER: MA-1

2016/B94058/Design/Plans/APPROACH WALL RESURFACING.dgn
DRAFTED BY: J.S. LeBLANC
CHECKED BY: D. HUDDA
DESIGNED BY: J.S. LeBLANC
CHECKED BY: D. HUDDA
DESIGN SUPERVISOR: R. KARIS

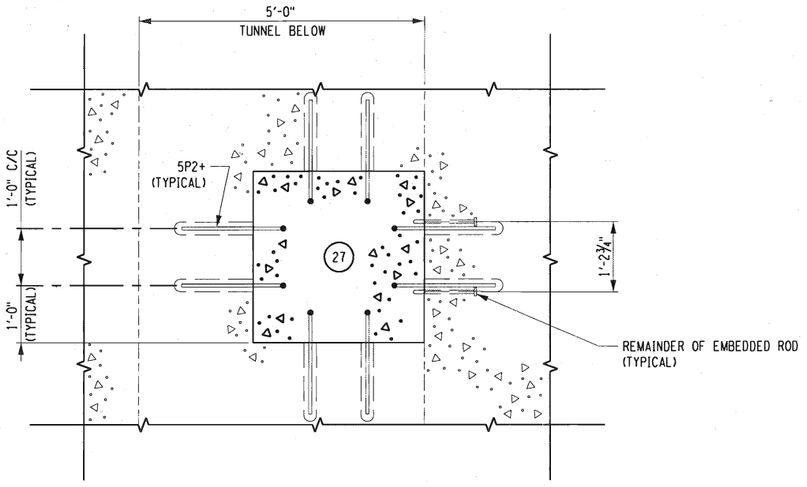

SECTION A-A
SCALE: ¾" = 1'-0"

NOTE:
REFER TO NOTES ON DRAWING MA-1.

ALTERED ON:	AFFIXED ON: 6-21-16
SIGNATURE: STAMP:	SIGNATURE: STAMP: STATE OF NEW YORK · F. DAVID HUDDA · 061048 · LICENSED PROFESSIONAL ENGINEER

LEGEND

SYMBOL	DESCRIPTION
	NEW STRUCTURAL CONCRETE UNDER ITEM 555.0105
	EXISTING CONCRETE (TO REMAIN)

IT IS A VIOLATION OF LAW FOR ANY PERSON, UNLESS THEY ARE ACTING UNDER THE DIRECTION OF A LICENSED PROFESSIONAL ENGINEER, ARCHITECT, LANDSCAPE ARCHITECT, OR LAND SURVEYOR, TO ALTER AN ITEM IN ANY WAY. IF AN ITEM BEARING THE STAMP OF A LICENSED PROFESSIONAL IS ALTERED, THE ALTERING ENGINEER, ARCHITECT, LANDSCAPE ARCHITECT, OR LAND SURVEYOR SHALL STAMP THE DOCUMENT AND INCLUDE THE NOTATION "ALTERED BY" FOLLOWED BY THEIR SIGNATURE. THE DATE OF SUCH ALTERATION, AND A SPECIFIC DESCRIPTION OF THE ALTERATION.

REVISIONS

DATE	DESCRIPTION	BY	SYM.

NEW YORK STATE THRUWAY AUTHORITY
DEPARTMENT OF ENGINEERING
200 SOUTHERN BLVD., ALBANY, N.Y. 12209

TITLE OF PROJECT: LOCK E-32 BYPASS CULVERT REPAIR
LOCATION OF PROJECT: TOWN OF PITTSFORD MONROE COUNTY
TITLE OF DRAWING: MANHOLE ABANDONMENT AND PLUGGING DETAILS II

CONTRACT NUMBER: TAB 16-26C
DATE: 6/14/16
DRAWING NUMBER: MA-2

2016\(B94058\Design\Plans\PROPOSED BYPASS VALVE.dgn
DESIGNED BY: J.S. LeBLANC
DRAFTED BY: J.S. LeBLANC
CHECKED BY: D. HUDDA
DESIGN SUPERVISOR: R. KARIS

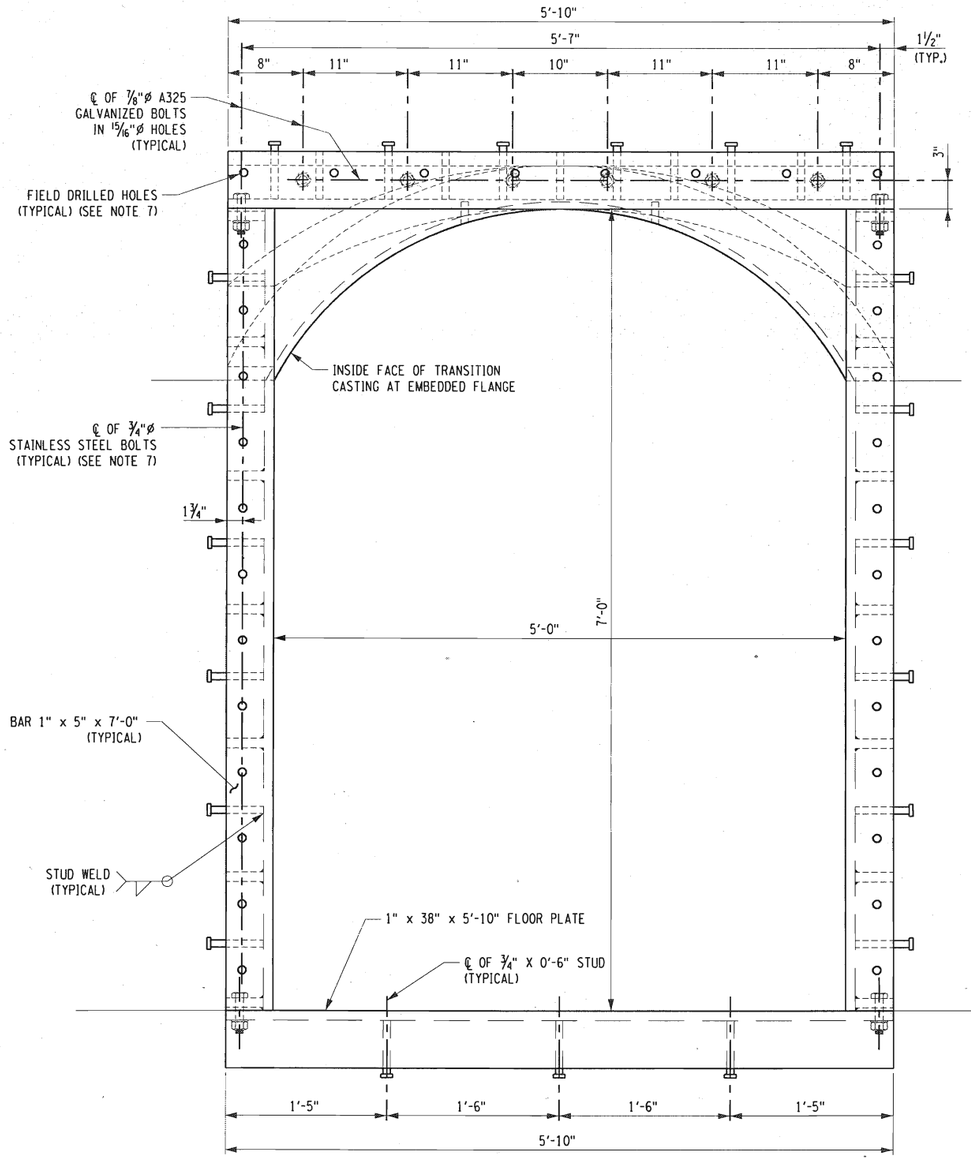

SECTION A-A
SCALE: 1½" = 1'-0"

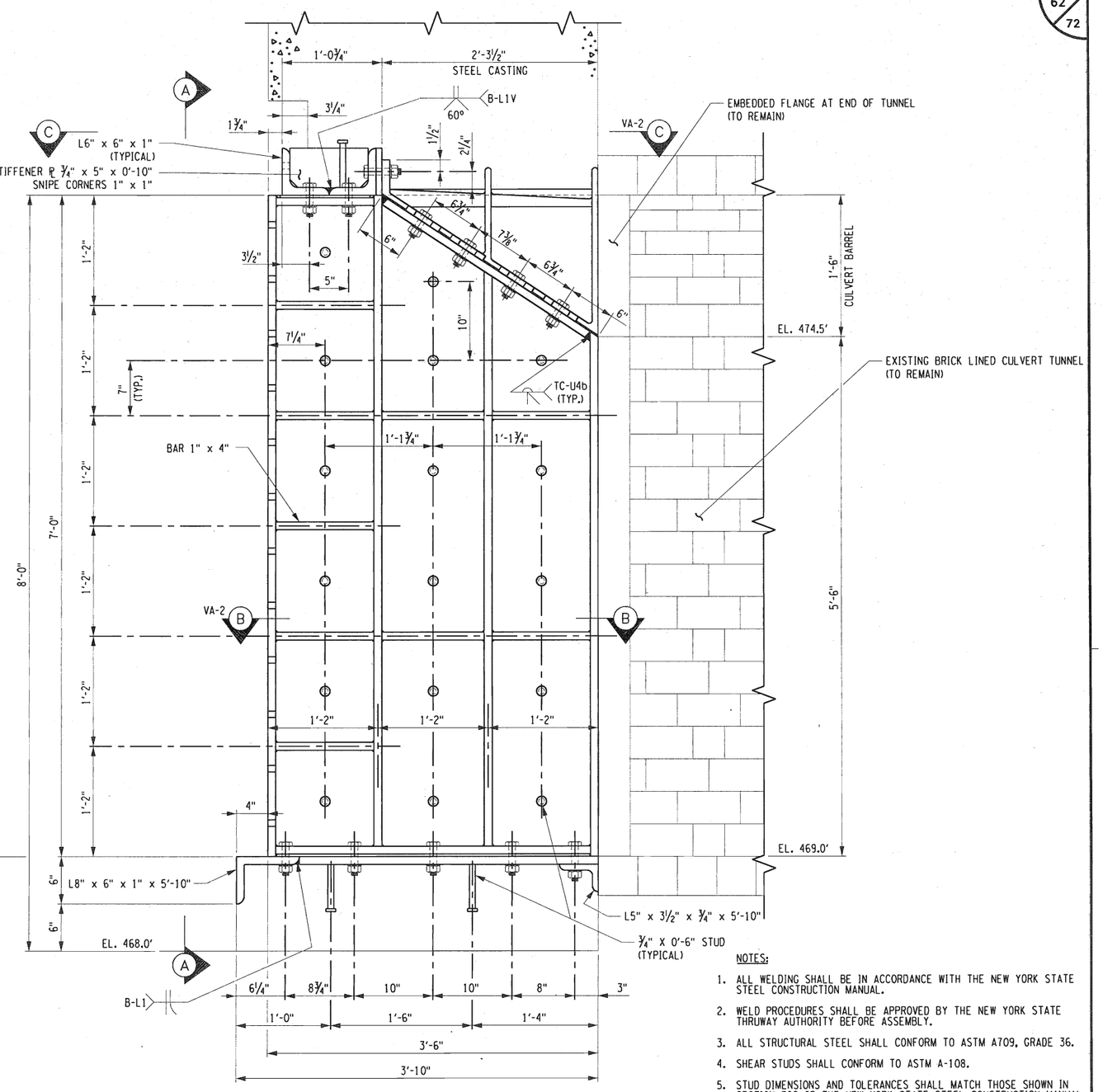

ELEVATION OF THIMBLE/SUPPORT FRAME AND TRANSITION CASTING
SCALE: 1½" = 1'-0"

NOTES:

1. ALL WELDING SHALL BE IN ACCORDANCE WITH THE NEW YORK STATE STEEL CONSTRUCTION MANUAL.
2. WELD PROCEDURES SHALL BE APPROVED BY THE NEW YORK STATE THRUWAY AUTHORITY BEFORE ASSEMBLY.
3. ALL STRUCTURAL STEEL SHALL CONFORM TO ASTM A709, GRADE 36.
4. SHEAR STUDS SHALL CONFORM TO ASTM A-108.
5. STUD DIMENSIONS AND TOLERANCES SHALL MATCH THOSE SHOWN IN SECTION 728 OF THE NEW YORK STATE STEEL CONSTRUCTION MANUAL.
6. FINISHED NON-CAST ASSEMBLIES SHALL BE CLEANED AND HOT DIP GALVANIZED IN ACCORDANCE WITH ASTM A-123.
7. HOLES IN THE THIMBLE SHALL BE MATCH DRILLED IN THE FIELD USING THE HEADER AND RAILS AS THE TEMPLATE. HOLES ARE SHOWN IN THEIR APPROXIMATE LOCATION ON THE THIMBLE.

ALTERED ON:	AFFIXED ON: 6-21-16
SIGNATURE: STAMP:	SIGNATURE: STAMP: STATE OF NEW YORK · F. DAVID HUDDA · 061048 · LICENSED PROFESSIONAL ENGINEER

IT IS A VIOLATION OF LAW FOR ANY PERSON, UNLESS THEY ARE ACTING UNDER THE DIRECTION OF A LICENSED PROFESSIONAL ENGINEER, ARCHITECT, LANDSCAPE ARCHITECT, OR LAND SURVEYOR, TO ALTER AN ITEM IN ANY WAY. IF AN ITEM BEARING THE STAMP OF A LICENSED PROFESSIONAL IS ALTERED, THE ALTERING ENGINEER, ARCHITECT, LANDSCAPE ARCHITECT, OR LAND SURVEYOR SHALL STAMP THE DOCUMENT AND INCLUDE THE NOTATION "ALTERED BY" FOLLOWED BY THEIR SIGNATURE. THE DATE OF SUCH ALTERATION, AND A SPECIFIC DESCRIPTION OF THE ALTERATION.

REVISIONS

DATE	DESCRIPTION	BY	SYM.

NEW YORK STATE THRUWAY AUTHORITY
DEPARTMENT OF ENGINEERING
200 SOUTHERN BLVD., ALBANY, N.Y. 12209

TITLE OF PROJECT: LOCK E-32 BYPASS CULVERT REPAIR	CONTRACT NUMBER: TAB 16-26C
LOCATION OF PROJECT: TOWN OF PITTSFORD MONROE COUNTY	DATE: 6/15/16
TITLE OF DRAWING: VALVE THIMBLE AND SUPPORT FRAME DETAILS I	DRAWING NUMBER: VA-1

2016\B94058\Design\Plans\PROPOSED BYPASS VALVE.dgn
DRAFTED BY: J.S. LeBLANC
CHECKED BY: D. HUDDA
DESIGNED BY: J.S. LeBLANC
CHECKED BY: D. HUDDA
DESIGN SUPERVISOR: R. KARIS

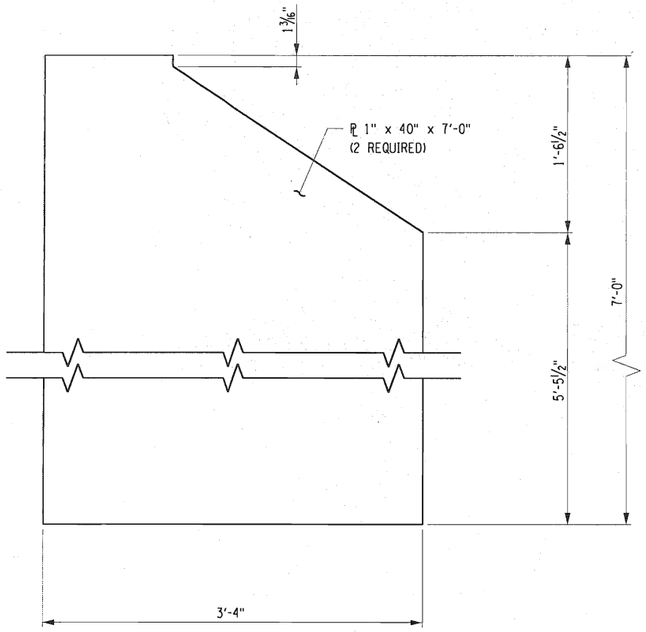

WALL PLATE DETAIL
SCALE: 1½" = 1'-0"

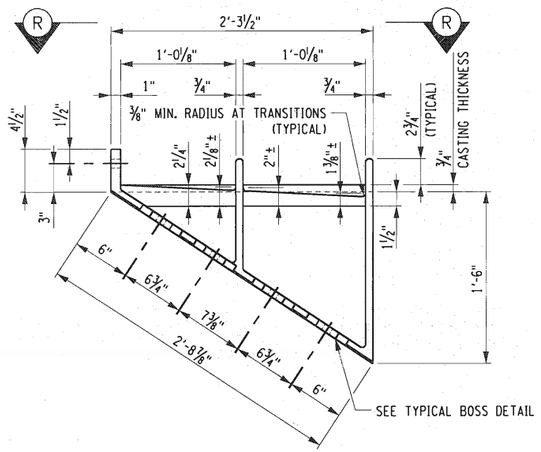

ELEVATION

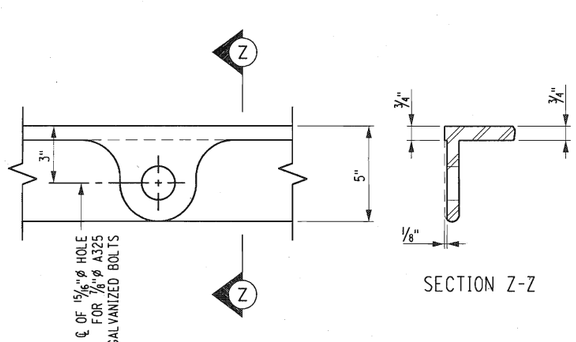

SECTION Z-Z

TYPICAL BOSS DETAIL FOR CAST TRANSITION
SCALE: 3" = 1'-0"

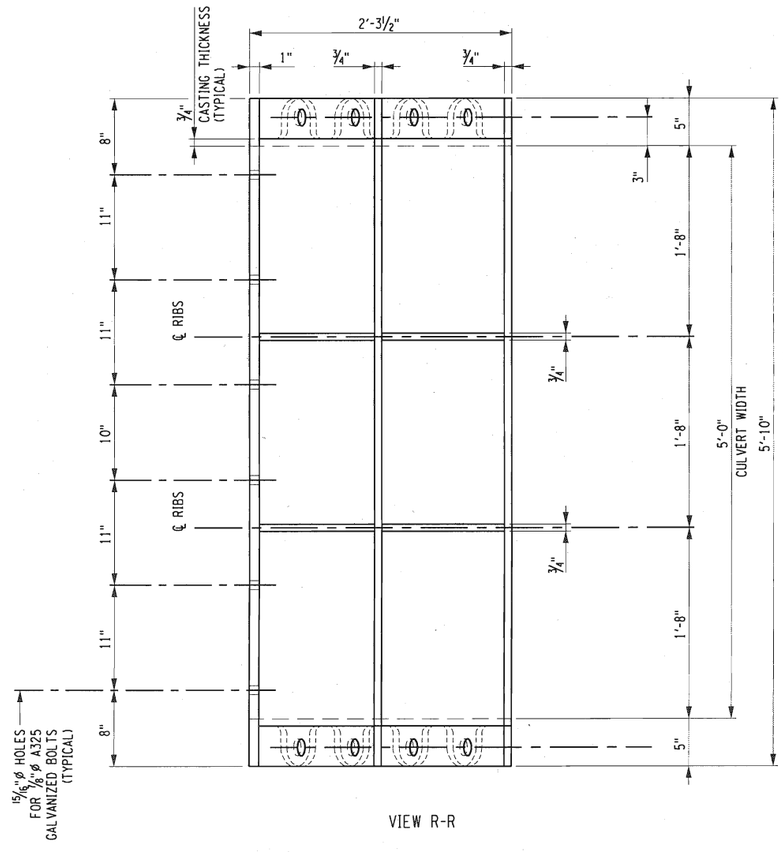

VIEW R-R

TRANSITION CASTING DETAIL
SCALE: 1½" = 1'-0"

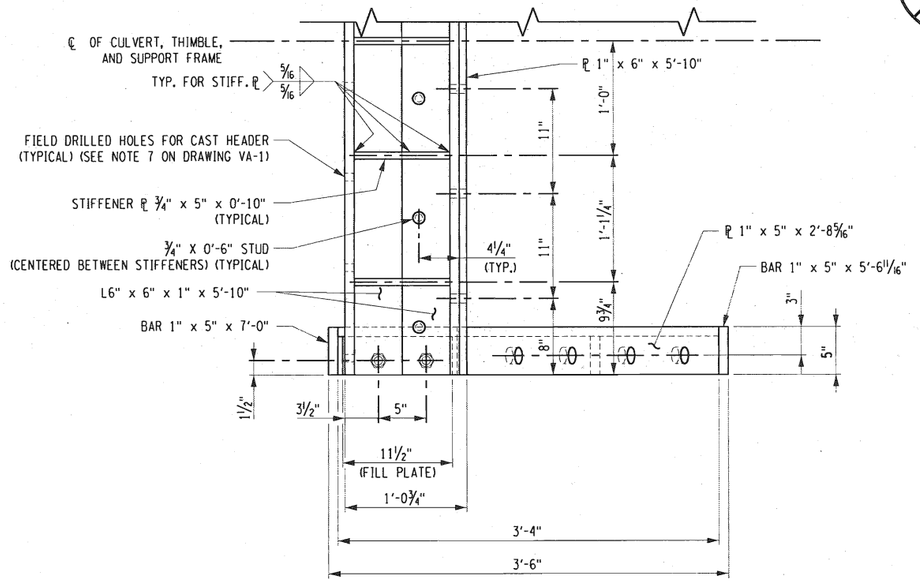

NOTE: THE THIMBLE AND SUPPORT FRAME ARE SYMMETRICAL ABOUT THE CULVERT CENTERLINE

VIEW C-C WITH TRANSITION CASTING REMOVED
SCALE: 1½" = 1'-0"

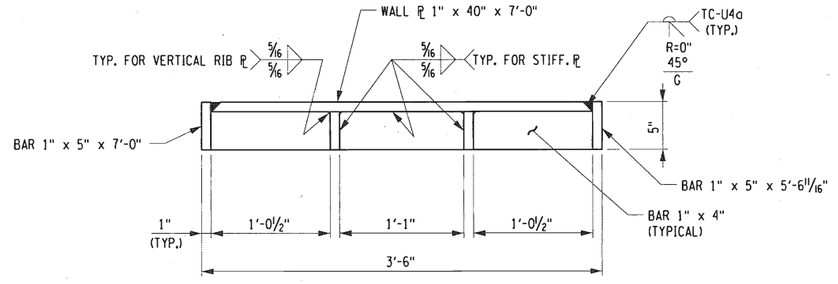

SECTION B-B
SCALE: 1½" = 1'-0"

NOTES:

1. REFER TO NOTES ON DRAWING VA-1.
2. WORK THIS DRAWING WITH DRAWINGS VA-1 AND VA-3.
3. COST FOR CASTING PATTERN FOR THE CAST STEEL TRANSITION PIECE SHALL BE PAID FOR UNDER ITEM 665.10100112 - CASTING PATTERNS. THE PATTERN SHALL BECOME PROPERTY OF THE NEW YORK STATE CANAL CORPORATION AT THE COMPLETION OF THE PROJECT, IN ACCORDANCE WITH THE SPECIFICATION.
4. THE COST OF FURNISHING AND INSTALLING THE TRANSITION CASTING SHALL BE PAID FOR UNDER ITEM 656.01.

ALTERED ON:	AFFIXED ON: 6-21-16
SIGNATURE: STAMP:	SIGNATURE: STAMP: STATE OF NEW YORK · F. DAVID HUDDA · 061048 · LICENSED PROFESSIONAL ENGINEER

IT IS A VIOLATION OF LAW FOR ANY PERSON, UNLESS THEY ARE ACTING UNDER THE DIRECTION OF A LICENSED PROFESSIONAL ENGINEER, ARCHITECT, LANDSCAPE ARCHITECT, OR LAND SURVEYOR, TO ALTER AN ITEM IN ANY WAY. IF AN ITEM BEARING THE STAMP OF A LICENSED PROFESSIONAL IS ALTERED, THE ALTERING ENGINEER, ARCHITECT, LANDSCAPE ARCHITECT, OR LAND SURVEYOR SHALL STAMP THE DOCUMENT AND INCLUDE THE NOTATION "ALTERED BY" FOLLOWED BY THEIR SIGNATURE. THE DATE OF SUCH ALTERATION, AND A SPECIFIC DESCRIPTION OF THE ALTERATION.

REVISIONS

DATE	DESCRIPTION	BY	SYM.

NEW YORK STATE THRUWAY AUTHORITY
DEPARTMENT OF ENGINEERING
200 SOUTHERN BLVD., ALBANY, N.Y. 12209

TITLE OF PROJECT: LOCK E-32 BYPASS CULVERT REPAIR
LOCATION OF PROJECT: TOWN OF PITTSFORD MONROE COUNTY
TITLE OF DRAWING: VALVE THIMBLE AND SUPPORT FRAME DETAILS II

CONTRACT NUMBER: TAB 16-26C
DATE: 6/15/16
DRAWING NUMBER: VA-2

2016\694058\Design\Plans\PROPOSED BYPASS VALVE.dgn
CHECKED BY: D. HUDDA
DRAFTED BY: J.S. LeBLANC
CHECKED BY: D. HUDDA
DESIGNED BY: J.S. LeBLANC
DESIGN SUPERVISOR: R. KARIS

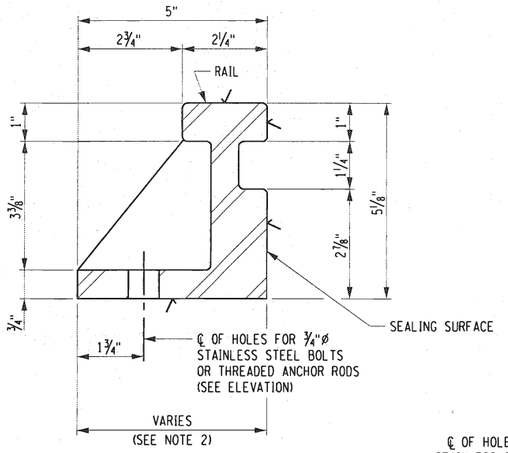

SECTION X-X
SCALE: 6" = 1'-0"

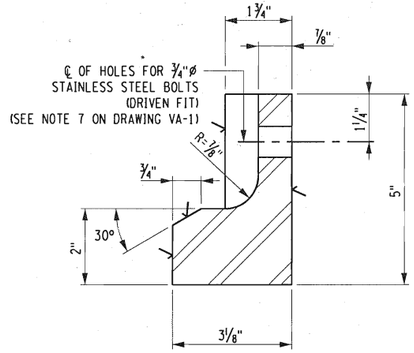

SECTION V
SCALE: 6" = 1'-0"

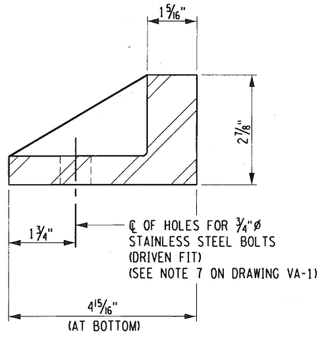

SECTION Y-Y
SCALE: 6" = 1'-0"

NOTES:

1. THE CONTRACTOR SHALL VERIFY THE SIZE OF THE VALVE GATE WHEEL BEFORE FABRICATION OF THE NEW GUIDE ELEMENTS TO ENSURE THE PROPER OPERATING CLEARANCES ARE PROVIDED.
2. WIDTH VARIES (TAPERS) OVER THE 1'-4" LENGTH, AND SEALING SURFACE TAPERS AS SHOWN IN SECTION W-W.
3. LEFT SIDE RAIL IS SHOWN FULLY DETAILED. RIGHT SIDE RAIL IS IDENTICAL AND OPPOSITE HAND.
4. "√" DENOTES SURFACE FINISH TO 125 MICROINCHES, MACHINED TO EXACT DIMENSION SHOWN.
5. FURNISH AND INSTALL CAST STEEL HEADER AND RAILS UNDER ITEM 665.46030012.

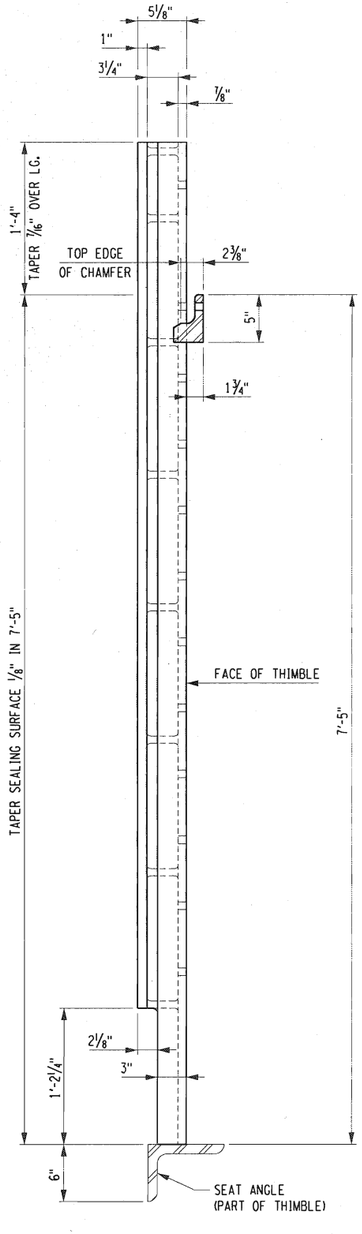

SECTION W-W
SCALE: 1½" = 1'-0"

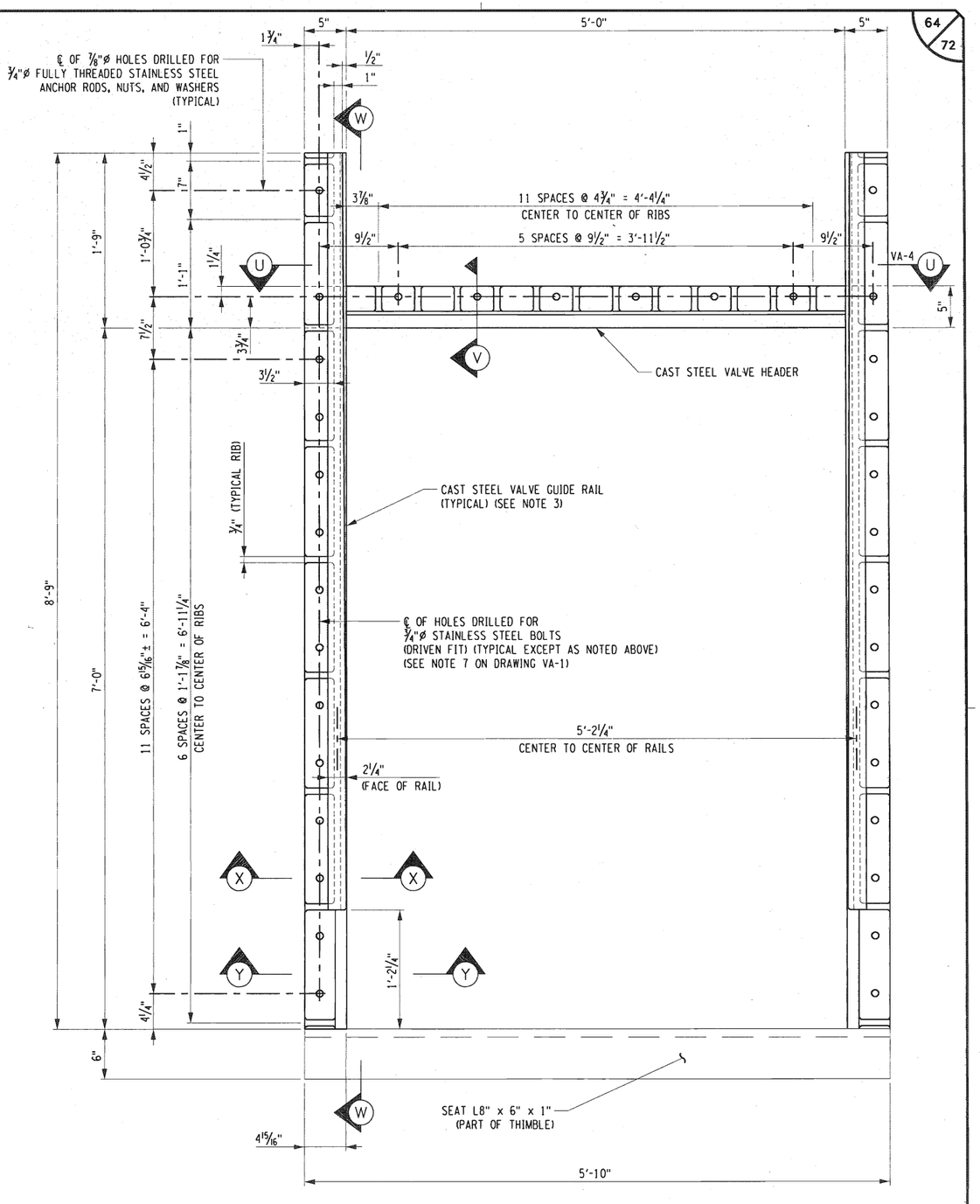

ELEVATION OF CAST STEEL GUIDE RAILS AND HEADER
SCALE: 1½" = 1'-0"

ALTERED ON:	AFFIXED ON: 6-21-16
SIGNATURE: STAMP:	SIGNATURE: STAMP: STATE OF NEW YORK · F. DAVID HUDDA · LICENSED PROFESSIONAL ENGINEER · 061048

IT IS A VIOLATION OF LAW FOR ANY PERSON, UNLESS THEY ARE ACTING UNDER THE DIRECTION OF A LICENSED PROFESSIONAL ENGINEER, ARCHITECT, LANDSCAPE ARCHITECT, OR LAND SURVEYOR, TO ALTER AN ITEM IN ANY WAY. IF AN ITEM BEARING THE STAMP OF A LICENSED PROFESSIONAL IS ALTERED, THE ALTERING ENGINEER, ARCHITECT, LANDSCAPE ARCHITECT, OR LAND SURVEYOR SHALL STAMP THE DOCUMENT AND INCLUDE THE NOTATION "ALTERED BY" FOLLOWED BY THEIR SIGNATURE. THE DATE OF SUCH ALTERATION, AND A SPECIFIC DESCRIPTION OF THE ALTERATION.

REVISIONS

DATE	DESCRIPTION	BY	SYM.

NEW YORK STATE THRUWAY AUTHORITY
DEPARTMENT OF ENGINEERING
200 SOUTHERN BLVD., ALBANY, N.Y. 12209

TITLE OF PROJECT: LOCK E-32 BYPASS CULVERT REPAIR
LOCATION OF PROJECT: TOWN OF PITTSFORD MONROE COUNTY
TITLE OF DRAWING: VALVE HEADER AND GUIDE RAIL DETAILS I

CONTRACT NUMBER: TAB 16-26C
DATE: 6/15/16
DRAWING NUMBER: VA-3

2016\B94058\Design\Plans\PROPOSED BYPASS VALVE.dgn

DRAFTED BY: J.S. LeBLANC

CHECKED BY: D. HUDDA

DESIGNED BY: J.S. LeBLANC

CHECKED BY: D. HUDDA

DESIGN SUPERVISOR: R. KARIS

NOTES:

1. REFER TO NOTES ON DRAWING VA-1.
2. THE CONTRACTOR SHALL VERIFY THE SIZE OF THE VALVE GATE WHEEL BEFORE FABRICATION OF THE NEW GUIDE ELEMENTS TO ENSURE THE PROPER OPERATING CLEARANCES ARE PROVIDED.
3. NEW COUNTERWEIGHT GUIDE RAILS SHALL BE FABRICATED FROM ANGLES AND STRUCTURAL SECTIONS SPECIFIED, STRAIGHTENED AND STRESS RELIEVED.
4. NEW COUNTERWEIGHT GUIDE RAILS, 2 REQUIRED, (1 LEFT, 1 RIGHT):
   a. SHALL BE INSTALLED PLUMB, STRAIGHT, AND PARALLEL TO THE ADJOINING COUNTERWEIGHT GUIDE RAIL, AND PARALLEL TO THE VALVE EXTENSION RAILS IN BOTH THE TRANSVERSE AND LONGITUDINAL DIRECTIONS, FOR THE FULL HEIGHT OF THE RAIL.
   b. SHALL BE FABRICATED WITH A MAXIMUM CAMBER AND SWEEP OF 1/8".
   c. THE 4" DEPTH OF THE COUNTERWEIGHT GUIDE RAIL IS BASED ON THE NOMINAL VALVE WHEEL DIMENSION OF 28½" AS MEASURED OUT-TO-OUT OF THE GUIDE FLANGE (26½" BEARING SURFACE TO BEARING SURFACE. THE CONTRACTOR SHALL VERIFY THE WHEEL SIZE USED ON THE EXISTING VALVE TO BE REINSTALLED, AND MAKE THE APPROPRIATE ADJUSTMENTS DURING FABRICATION/INSTALLATION.
   d. THE 4" DEPTH OF THE COUNTERWEIGHT GUIDE RAIL IS ALSO BASED ON THE NOMINAL 36" WIDE VALVE WELL. THE CONTRACTOR SHALL VERIFY THE NEW VALVE WELL DIMENSIONS AS CONSTRUCTED BEFORE FABRICATION OF THE NEW RAILS TO ASSURE PROPER ALIGNMENT AND FIT-UP.
5. REINSTALL THE EXISTING EXTENSION RAILS:
   a. IN PROPER ALIGNMENT WITH THE NEW CAST STEEL RAILS AND HEADER, USING 7/8"ø FULLY THREADED STAINLESS STEEL ANCHOR BOLTS, NUTS, AND WASHERS USING THE EXISTING HOLES IN THE RAILS AS THE DRILLING TEMPLATE.
   b. PLUMB, STRAIGHT, AND PARALLEL TO THE ADJOINING VALVE EXTENSION RAIL, AND PARALLEL TO THE COUNTERWEIGHT GUIDE RAILS IN BOTH THE TRANSVERSE AND LONGITUDINAL DIRECTIONS, FOR THE FULL HEIGHT OF THE RAIL.
6. PROVIDE AN 8 BOLT SINGLE LAP SPLICE PLATE (IN-KIND WITH THE EXISTING) CONNECTING THE WEBS OF THE NEW VALVE SEAT AND THE REINSTALLED EXTENSION RAIL. THE PLATE SHALL HAVE ONE STEPPED FACE TO SUIT LATERAL ALIGNMENT.
7. PROVIDE GALVANIZED SHIM PACKS INCLUDING 1/2", 7/16", 1/4", AND 3/16" THICKNESSES FOR EACH BOLTED RAIL CONNECTION TO FACILITATE RAIL PLUMBNESS AND CLEARANCE ADJUSTMENTS.
8. ANY ADJUSTMENTS REQUIRED TO MAINTAIN THE PROPER RAIL-TO-RAIL CLEARANCES OF ALL RAILS, FOR THE FULL HEIGHT OF SUCH RAILS, SHALL BE APPROVED BY THE ENGINEER, AND PERFORMED AT NO ADDITIONAL COST TO THE THRUWAY AUTHORITY/CANAL CORPORATION.
9. THE NEW YORK STATE CANAL CORPORATION WILL PROVIDE PATTERNS FOR THE CAST STEEL HEADER AND RAILS FOR USE BY THE CONTRACTOR. THE CONTRACTOR SHALL MAKE THE REQUEST FOR THE PATTERNS TO THE CANAL CORPORATION AT LEAST TWO WEEKS IN ADVANCE OF THE ACTUAL PICK-UP DATE. THE CONTRACTOR SHALL CONFIRM THE SIZES AND DIMENSIONS OF THE PATTERNS, AND COORDINATE THE FIT-UP WITH THE NEW SUPPORT LINING PRIOR TO FABRICATION. THE CONTRACTOR SHALL RETURN THE PATTERNS TO THE CANAL CORPORATION, AT THE LOCATION SPECIFIED, WHEN THEY ARE NO LONGER NEEDED FOR THIS PROJECT. THE COST FOR FURNISHING AND INSTALLING THE NEW VALVE HEADER AND RAILS SHALL BE PAID FOR UNDER ITEM 665.46030012 - VALVE WELL HEADER AND RAILS.
10. THESE DETAILS HAVE BEEN PRODUCED USING RECORD PLANS. THE CONTRACTOR SHALL VERIFY DIMENSIONS FOLLOWING NEW CONCRETE POURS TO ASSURE FIT-UP AND PROPER OPERATION OF THE MECHANICAL ELEMENTS INSTALLED IN THE NEW VALVE WELL. REFER TO ORIGINAL CONSTRUCTION RECORD PLANS FOR CONTRACT NUMBER 23, SHEETS 89, 90, AND 91 FOR VALVE WELL DETAILS.
11. SEE DRAWING VA-3 FOR LOCATION OF SECTION U-U.
12. THE EXISTING VALVE GATE, COUNTERWEIGHT, AND EXTENTION RAILS SHALL BE REMOVED, STORED AS DIRECTED BY THE ENGINEER, AND REINSTALLED BY THE CONTRACTOR. UPON COMPLETION OF WORK ON THE BYPASS VALVE MACHINERY, THE VALVE SHALL BE OPERATED A MINIMUM OF THREE TIMES, WITH OBSERVATION BY THE ENGINEER AND THE CONTRACTOR, TO CONFIRM PROPER OPERATION OF THE VALVE. ANY ADJUSTMENTS SHALL BE MADE AS ORDERED BY THE ENGINEER. THE REMOVAL AND STORAGE, AND REINSTALLATION OF THE EXISTING VALVE GATE, COUNTERWEIGHT, AND EXTENTION RAILS SHALL BE PAID FOR UNDER ITEM 665.10151812 - REMOVE AND STORE MISCELLANEOUS LOCK EQUIPMENT, AND ITEM 665.10151912 - REINSTALL STORED LOCK EQUIPMENT.
13. DRILLING AND GROUTING OF FULLY THREADED ANCHORS SHALL BE PAID FOR UNDER ITEM 586.02----25 - DRILLING AND GROUTING BOLTS OR REINFORCING BARS.
14. STAINLESS STEEL ANCHOR RODS, NUTS, AND WASHERS SHALL BE PAID FOR UNDER ITEM 665.46030012.
15. STRUCTURAL STEEL THIMBLE/SUPPORT FRAME SHALL BE FABRICATED, GALVANIZED, AND INSTALLED UNDER ITEM 564.05025012 - GALVANIZED STRUCTURAL STEEL. REFER TO ADDITIONAL NOTES ON DRAWING VA-1.
16. AFTER THE THIMBLE, SUPPORT FRAME, HEADER, AND RAILS HAVE BEEN INSTALLED AND ALIGNED, THE RECESS AT THE TOP OF THE THIMBLE SHALL BE COMPLETELY FILLED WITH GROUT, RESULTING IN A FLUSH SURFACE WITH FACE OF THE NEW CONCRETE. THE GROUT SHALL CONSIST OF A MIXTURE PROPORTIONED BY VOLUME, OF ONE PART PORTLAND CEMENT, TYPE 1 AND TYPE 2 (SPECIFICATION SECTION 701-01); TEN PARTS OF GROUT SAND (SPECIFICATION SECTION 703-04); AND A SUFFICIENT QUANTITY OF FRESH WATER TO PROVIDE A WORKABLE CONSISTANCY, TO THE ENGINEER'S SATISFACTION. THE COST FOR MATERIALS AND LABOR TO COMPLETE THIS WORK SHALL BE INCLUDED IN ITEM 665.46030012. SEE GROUTING DETAIL AT RIGHT.

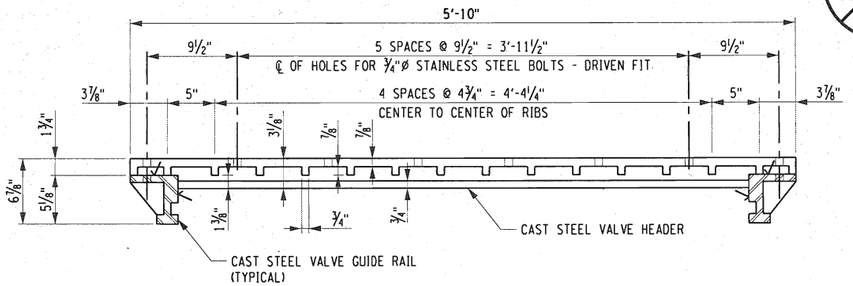

SECTION U-U
SCALE: 1½" = 1'-0"

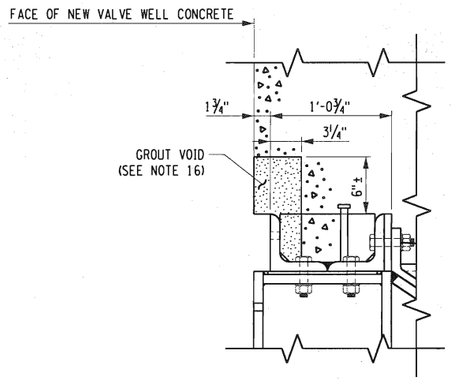

NOTE: CAST STEEL HEADER NOT SHOWN

GROUTING DETAIL
SCALE: 1½" = 1'-0"

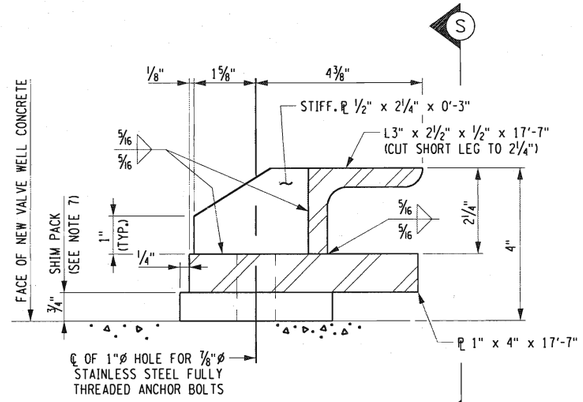

SECTION T-T
SCALE: 6" = 1'-0"

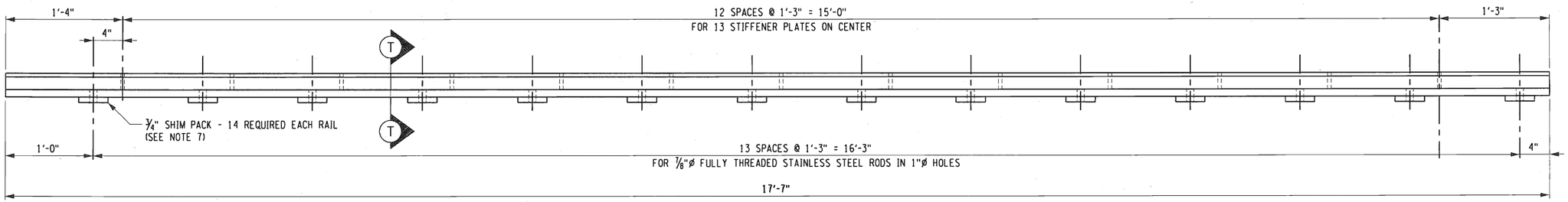

SECTION S-S
(COUNTERWEIGHT GUIDE RAIL - RIGHT SIDE AS DETAILED, LEFT SIDE OPPOSITE HAND)
SCALE: 1½" = 1'-0"

ALTERED ON:	AFFIXED ON: 6-21-16
SIGNATURE: STAMP:	SIGNATURE: STAMP: STATE OF NEW YORK · F. DAVID HUDDA · 061048 · LICENSED PROFESSIONAL ENGINEER

IT IS A VIOLATION OF LAW FOR ANY PERSON, UNLESS THEY ARE ACTING UNDER THE DIRECTION OF A LICENSED PROFESSIONAL ENGINEER, ARCHITECT, LANDSCAPE ARCHITECT, OR LAND SURVEYOR, TO ALTER AN ITEM IN ANY WAY. IF AN ITEM BEARING THE STAMP OF A LICENSED PROFESSIONAL IS ALTERED, THE ALTERING ENGINEER, ARCHITECT, LANDSCAPE ARCHITECT, OR LAND SURVEYOR SHALL STAMP THE DOCUMENT AND INCLUDE THE NOTATION "ALTERED BY" FOLLOWED BY THEIR SIGNATURE, THE DATE OF SUCH ALTERATION, AND A SPECIFIC DESCRIPTION OF THE ALTERATION.

REVISIONS

DATE	DESCRIPTION	BY	SYM.

NEW YORK STATE THRUWAY AUTHORITY
DEPARTMENT OF ENGINEERING
200 SOUTHERN BLVD., ALBANY, N.Y. 12209

TITLE OF PROJECT: LOCK E-32 BYPASS CULVERT REPAIR
LOCATION OF PROJECT: TOWN OF PITTSFORD MONROE COUNTY
TITLE OF DRAWING: VALVE HEADER AND GUIDE RAIL DETAILS II

CONTRACT NUMBER: TAB 16-26C
DATE: 6/20/16
DRAWING NUMBER: VA-4

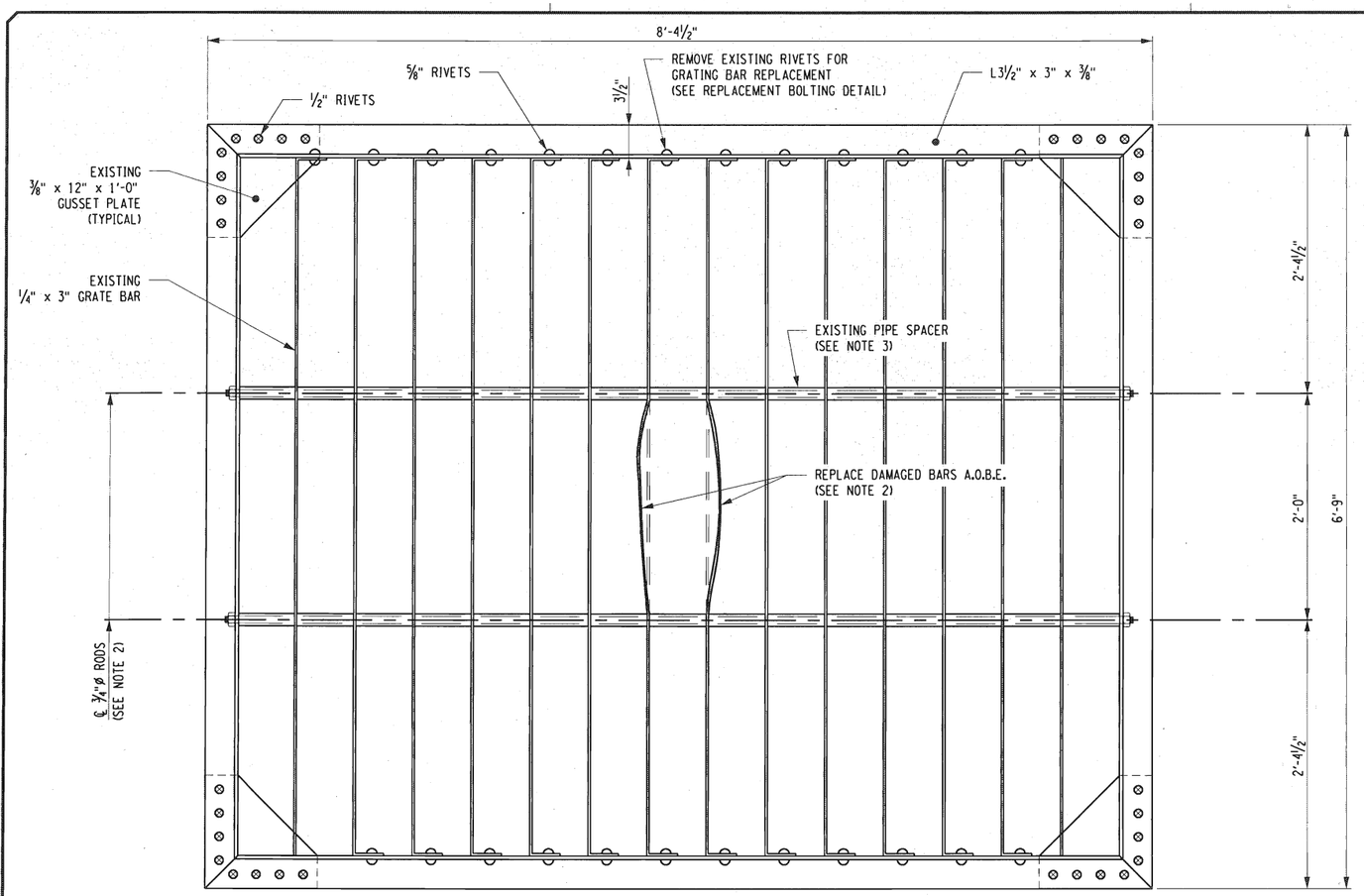

EXISTING BYPASS CULVERT TRASH RACK
(ILLUSTRATING TYPICAL DAMAGE)
SCALE: 1½" = 1'-0"

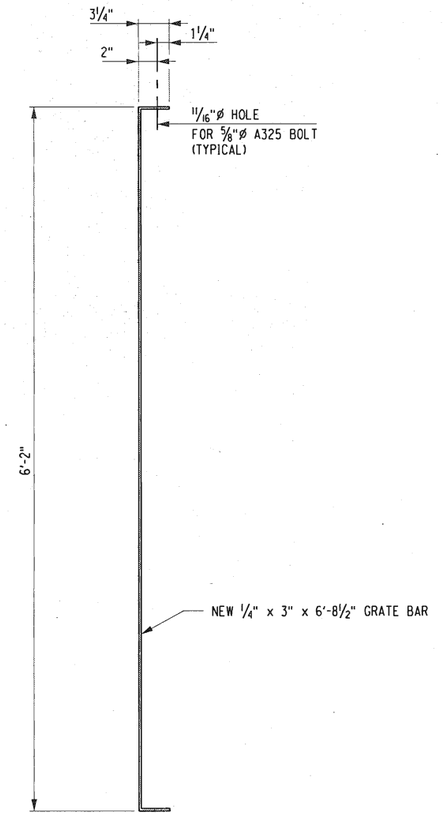

REPLACEMENT GRATE BAR
SCALE: 1½" = 1'-0"

NOTES:

1. THESE DETAILS WERE PRODUCED USING RECORD PLANS. THE EXISTING TRASH RACKS ARE INTENDED TO BE RE-USED. THE CONTRACTOR SHALL FIELD VERIFY DIMENSIONS BEFORE FABRICATING REPLACEMENT PARTS, AND DETERMINE CONDITION OF THE EXISTING TRASH RACKS, AND PERFORM REPAIRS NECESSARY, A.O.B.E.
2. REPLACEMENT TRASH RACK STRUCTURAL STEEL ELEMENTS INCLUDE THE 3" GRATE BARS AND THE ¾" RODS. NEW MATERIAL SHALL BE ASTM A36 MATERIAL. THE NEW GRATE BARS SHALL BE GALVANIZED IN ACCORDANCE WITH THE SPECIFICATION. THE RODS SHALL BE PLAIN. NEW STEEL GRATE BARS SHALL BE FURNISHED AND INSTALLED UNDER ITEM 564.05045012. THE NEW STEEL RODS SHALL BE FURNISHED AND INSTALLED UNDER ITEM 564.0502.
3. THE EXISTING 1"ø PIPE SPACERS ARE INTENDED TO BE RE-USED. IF THE CONDITION OF THE EXISTING SPACERS PROHIBIT THEIR RE-USE, PROVIDE NEW SPACERS MEETING ASTM A53 GRADE B SPECIFICATION. PAINT THE INSTALLED PIPE SPACERS WITH GALVANIZED COATING IN ACCORDANCE WITH, AND SATISFYING THE MATERIAL SPECIFICATIONS OF SECTION 719-01.
4. EXISTING STEEL THAT IS TO REMAIN SHALL BE CLEANED TO FACILITATE DISASSEMBLY AND REPAIR. AFTER RE-ASSEMBLY, THE EXISTING ELEMENTS THAT WERE CLEANED TO FACILITATE REPAIRS SHALL BE PAINTED WITH GALVANIZED COATING IN ACCORDANCE WITH, AND SATISFYING THE MATERIAL SPECIFICATIONS OF SECTION 719-01. THIS WORK INCLUDES ANY REQUIRED TOUCH-UP AND PAINTING OF THE ROD END NUTS AND NEW BOLTS.
5. EXISTING STEEL INTENDED FOR REMOVAL SHALL BE REMOVED AND DISPOSED OF BY THE CONTRACTOR UNDER ITEM 589.520001.
6. FOR THE PURPOSE OF ESTIMATION, IT IS ASSUMED THAT 12 BARS WILL REQUIRE REPLACEMENT WITHIN THE THREE TRASH RACKS. THE RODS SHALL BE REPLACED WHENEVER DISASSEMBLY IS REQUIRED TO REPLACE THE GRATE BARS.
7. NEW 5/8" A325 BOLTS SHALL BE USED TO INSTALL THE NEW GRATE BARS. NUTS CONFORMING TO ASTM A563 AND NEW WASHERS CONFORMING TO ASTM F436 SHALL BE USED WITH THE NEW BOLTS. NEW WASHERS SHALL BE INSTALLED UNDER THE HEAD AND NUT.
8. THE COST FOR GALVANIZED PAINTING OF THE TRASH RACK REPAIR AREAS AND ITEMS LISTED IN THE NOTES ABOVE, INCLUDING MATERIALS AND LABOR TO COMPLETE THE WORK, SHALL BE PAID FOR UNDER ITEM 564.05045012.

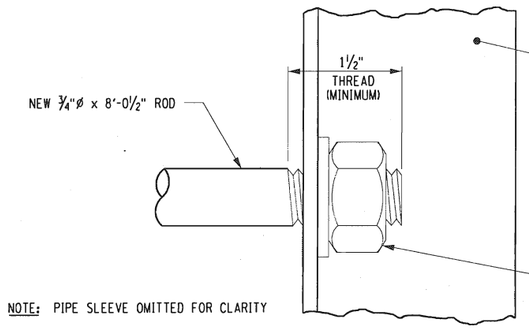

NOTE: PIPE SLEEVE OMITTED FOR CLARITY

REPLACEMENT ROD END DETAIL
NOT TO SCALE

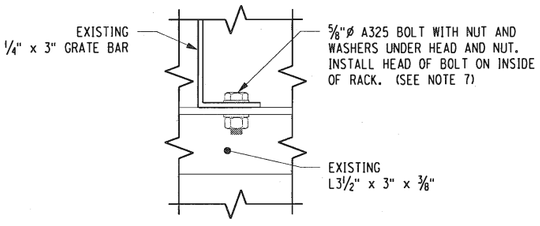

REPLACEMENT BOLTING DETAIL
SCALE: 3" = 1'-0"

ALTERED ON:	AFFIXED ON: 6-21-16
SIGNATURE: STAMP:	SIGNATURE: STAMP: STATE OF NEW YORK F. DAVID HUDDA LICENSED PROFESSIONAL ENGINEER 061048

IT IS A VIOLATION OF LAW FOR ANY PERSON, UNLESS THEY ARE ACTING UNDER THE DIRECTION OF A LICENSED PROFESSIONAL ENGINEER, ARCHITECT, LANDSCAPE ARCHITECT, OR LAND SURVEYOR, TO ALTER AN ITEM IN ANY WAY. IF AN ITEM BEARING THE STAMP OF A LICENSED PROFESSIONAL IS ALTERED, THE ALTERING ENGINEER, ARCHITECT, LANDSCAPE ARCHITECT, OR LAND SURVEYOR SHALL STAMP THE DOCUMENT AND INCLUDE THE NOTATION "ALTERED BY" FOLLOWED BY THEIR SIGNATURE. THE DATE OF SUCH ALTERATION, AND A SPECIFIC DESCRIPTION OF THE ALTERATION.

REVISIONS

DATE	DESCRIPTION	BY	SYM.

NEW YORK STATE THRUWAY AUTHORITY
DEPARTMENT OF ENGINEERING
200 SOUTHERN BLVD., ALBANY, N.Y. 12209

TITLE OF PROJECT: LOCK E-32 BYPASS CULVERT REPAIR
LOCATION OF PROJECT: TOWN OF PITTSFORD MONROE COUNTY
TITLE OF DRAWING: TRASH RACK REPAIRS

CONTRACT NUMBER: TAB 16-26C
DATE: 6/14/16
DRAWING NUMBER: TR-1

DESIGN SUPERVISOR: R. KARIS
DESIGNED BY: J.S. LeBLANC
DRAFTED BY: J.S. LeBLANC
CHECKED BY: D. HUDDA
2016/B94058/Design/Plans/TRASH RACK REPAIRS.dgn
CHECKED BY: D. HUDDA

2016/594058/Design/Plans/FILLING CULVERT INLET REPAIR DETAILS.dgn
DRAFTED BY: R. SCHABHETL, J.S. LeBLANC CHECKED BY: D. HUDDA
DESIGNED BY: J.S. LeBLANC CHECKED BY: D. HUDDA
DESIGN SUPERVISOR: R. KARIS

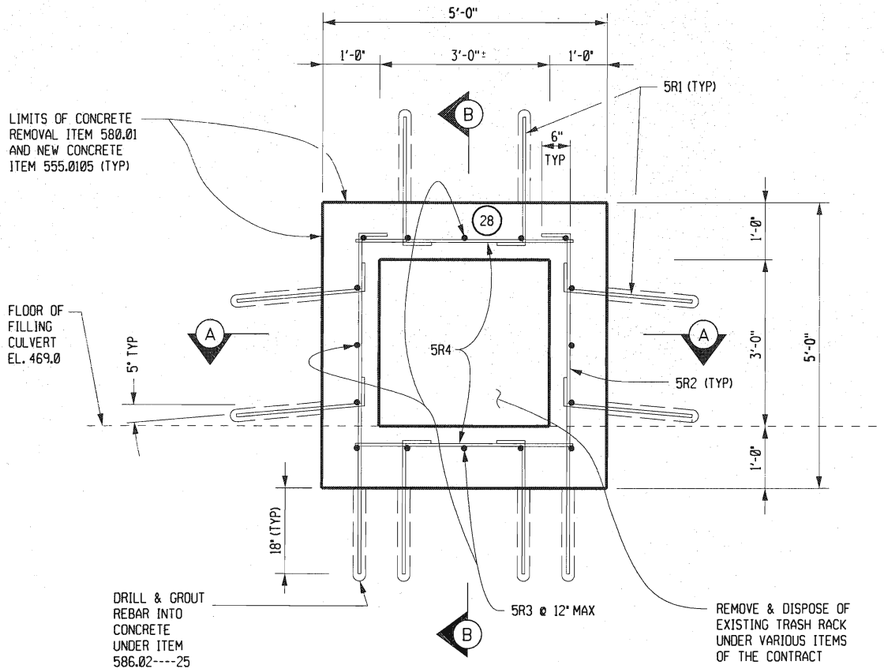

FRONT ELEVATION - POUR 28
SCALE: ¾" = 1'-0"

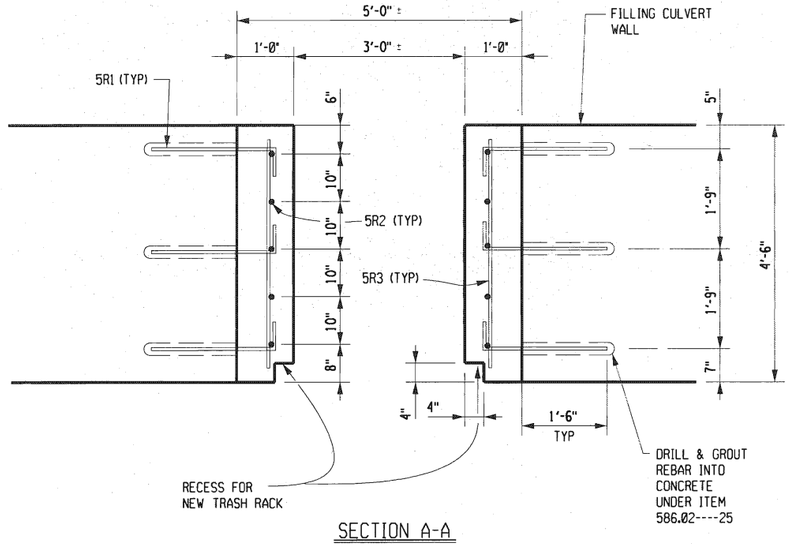

SECTION A-A
SCALE: ¾" = 1'-0"

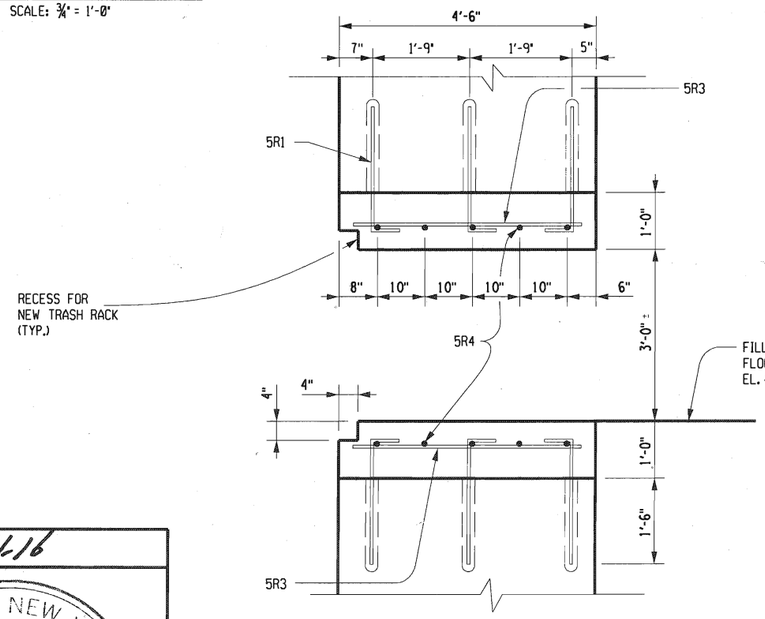

SECTION B-B
SCALE: ¾" = 1'-0"

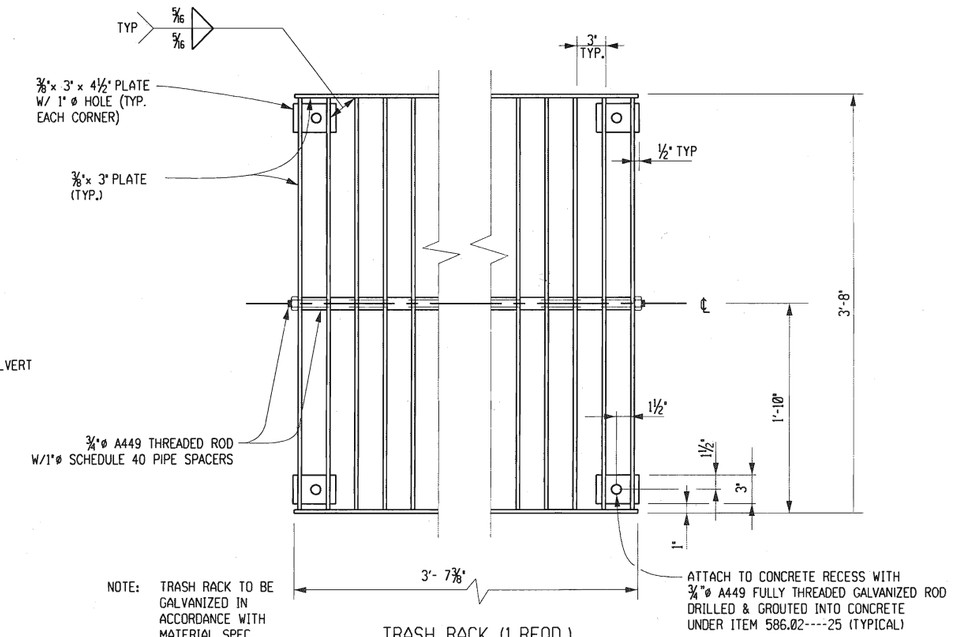

NOTE: TRASH RACK TO BE GALVANIZED IN ACCORDANCE WITH MATERIAL SPEC. 719-01

TRASH RACK (1 REQD.)
ITEM 564.0503
SCALE: 1½" = 1'-0"

ALTERED ON:	AFFIXED ON: 6-24-16
SIGNATURE: STAMP:	SIGNATURE: STAMP: STATE OF NEW YORK · F. DAVID HUDDA · 061048 · LICENSED PROFESSIONAL ENGINEER

IT IS A VIOLATION OF LAW FOR ANY PERSON, UNLESS THEY ARE ACTING UNDER THE DIRECTION OF A LICENSED PROFESSIONAL ENGINEER, ARCHITECT, LANDSCAPE ARCHITECT, OR LAND SURVEYOR, TO ALTER AN ITEM IN ANY WAY. IF AN ITEM BEARING THE STAMP OF A LICENSED PROFESSIONAL IS ALTERED, THE ALTERING ENGINEER, ARCHITECT, LANDSCAPE ARCHITECT, OR LAND SURVEYOR SHALL STAMP THE DOCUMENT AND INCLUDE THE NOTATION "ALTERED BY" FOLLOWED BY THEIR SIGNATURE, THE DATE OF SUCH ALTERATION, AND A SPECIFIC DESCRIPTION OF THE ALTERATION.

REVISIONS

DATE	DESCRIPTION	BY	SYM.

NEW YORK STATE THRUWAY AUTHORITY
DEPARTMENT OF ENGINEERING
200 SOUTHERN BLVD., ALBANY, N.Y. 12209

TITLE OF PROJECT: LOCK E-32 BYPASS CULVERT REPAIR
LOCATION OF PROJECT: TOWN OF PITTSFORD MONROE COUNTY
TITLE OF DRAWING: FILLING CULVERT INLET REPAIR DETAILS

CONTRACT NUMBER: TAB 16-26C
DATE: 6/20/16
DRAWING NUMBER: IN-1

DESIGN SUPERVISOR: R. KARIS
DESIGNED BY: J.S. LeBLANC
DRAFTED BY: J.S. LeBLANC
CHECKED BY: D. HUDDA
CHECKED BY: D. HUDDA

2016\894058\Design\Plans\BAR BENDS.dgn

(1) (2) (3) (4) (5) (6) (7) (8)

(9) (10) (11)

(12) (13) (14) (16) (17)

(18) (19) (20) (22) (23) (24)

(S1) (S2) (S3) (S4) (S5) (S6) (S11) (SP)

(T1) (T2) (T3) (T4) (T5) (T6) (T7) (T8) (T9)

(N1) (N2) (N3) (N4) (N5) (N6) (N7) (N8) (N9) (N10) (N11) (N12) (N13) (N14) (N15) (N16) (N17) (N18)

PE STAMP AND SIGNATURE ARE NOT REQUIRED ON THIS SHEET

STANDEE (ISOMETRIC VIEW) (25)

STANDEE (ISOMETRIC VIEW) (26)

STEEL REINFORCEMENT NOTES

1. UNLESS OTHERWISE DESIGNATED, ALL BAR REINFORCEMENT FOR CONCRETE IN SIZES UP TO AND INCLUDING NO. 18 SHALL CONFORM TO THE REQUIREMENTS OF THE "SPECIFICATIONS FOR DEFORMED BILLET-STEEL BARS FOR CONCRETE REINFORCEMENT", ASTM A615. ALL BARS SHALL BE GRADE 60 UNLESS OTHERWISE DESIGNATED.
2. FOR TYPICAL BENDING DETAILS, REQUIRED MINIMUM P.I.N. DIAMETER "D" OF BENDS AND HOOKS, REFER TO PAGE 5-15 OF THE NYSTA THRUWAY STRUCTURES DESIGN MANUAL AT http://www.thruway.ny.gov/business/consultants/design-manual/index.html. FOR OTHER STANDARD PRACTICES, SEE CURRENT EDITIONS OF ACI-318 AND THE CONCRETE REINFORCING STEEL INSTITUTE (CRSI) "MANUAL OF STANDARD PRACTICES" (MSP).
3. BARS THAT REQUIRE MORE ACCURATE BENDING THAN STANDARD PRACTICES SHALL HAVE LIMITS INDICATED ON THE BAR LIST.
4. ALL DIMENSIONS ARE OUT-TO-OUT OF BAR EXCEPT "A" AND "G" ON STANDARD 180° AND 135° HOOKS.
5. DIMENSIONS "A", "G", AND "J" ARE STANDARD BENDING DIMENSIONS PER EACH SIZE OF BAR. REFER TO PAGE 5-15 OF THE NYSTA THRUWAY STRUCTURES DESIGN MANUAL AT http://www.thruway.ny.gov/business/consultants/design-manual/index.html FOR DETAILS.
6. WHERE SLOPE DIFFERS FROM 45°, DIMENSIONS "H" AND "K" SHALL BE SHOWN ON THE BAR LIST.
7. ▲ - INDICATES BARS TO CUT TO FIT IN THE FIELD.
8. ALL REINFORCING BARS SHALL BE FABRICATED AND GALVANIZED IN ACCORDANCE WITH ASTM A767 AND MEET THE REQUIREMENTS OF NYSDOT MATERIAL SPECIFICATION 709-11.
9. FIELD CUT ENDS OF GALVANIZED REINFORCING STEEL SHALL BE REPAIRED AS PER SUBSECTION 556-3.03B2 OF THE N.Y.S. STANDARD SPECIFICATIONS. THE COST FOR THIS WORK SHALL BE INCLUDED IN THE PRICE BID FOR ITEM 556.0203.
10. ITEMS FOR REINFORCING STEEL ARE AS FOLLOWS:
    556.0201 - UNCOATED BAR REINFORCEMENT FOR STRUCTURES
    556.0203 - GALVANIZED BAR REINFORCEMENT FOR STRUCTURES
11. BAR MARK PROCEDURE IS AS FOLLOWS:

5SAG03
- 3 — SEQUENTIAL BAR NUMBER
- G — INDICATES BAR COATING (G=GALVANIZED, BLANK=BLACK)
- A — INDICATES STRUCTURE TYPE (IE. A=ABUTMENT, P=PIER ETC.)
- S — INDICATES BAR LOCATION (IE. S=SOUTH, N=NORTH ETC.) (OPTIONAL)
- 5 — INDICATES BAR SIZE (IE. 5, 6, 7, ETC.)

12. BAR MARKS SHOULD NORMALLY INCREASE IN SEQUENTIAL NUMBER AND SIZE FROM SMALLEST TO LARGEST AT EACH LOCATION.
13. "*" - INDICATES BAR MARK IS OUT OF SEQUENCE.
14. FIELD BENDING OF REINFORCING STEEL SHALL NOT BE PERMITTED UNDER ANY CIRCUMSTANCES UNLESS SPECIFICALLY INDICATED IN THIS PLAN SET.

REVISIONS			
DATE	DESCRIPTION	BY	SYM.

NEW YORK STATE THRUWAY AUTHORITY
DEPARTMENT OF ENGINEERING
200 SOUTHERN BLVD., ALBANY, N.Y. 12209

TITLE OF PROJECT: LOCK E-32 BYPASS CULVERT REPAIR
LOCATION OF PROJECT: TOWN OF PITTSFORD MONROE COUNTY
TITLE OF DRAWING: STANDARD BAR BENDS

CONTRACT NUMBER: TAB 16-26C
DATE: 1/15/15
DRAWING NUMBER: BB-1

MARK	QTY.	LENGTH	TYPE	WEIGHT	A	B	C	D	E	F	G	H / H_1	H_2	J	K / K_1	K_2	L	O	R	REMARKS
		CULVERT																		
		POUR ①																		
5C1	28	2'-4½"	N12	69.43		0"	10"	1'-6½"				0"			10"					
5C2	8	2'-3"	N12	18.79		0"	10"	1'-5"				0"			10"					
5C3	2	3'-11½"	N12	8.27		1'-2½"	2'-9"	0"				2'-7⅞"			8½"					
5C4	43	0'-6"	N1	22.45														6"		
5C5	2	14'-3½"	10	29.84	3'-9"	6'-9½"	3'-9"											5'-7¼"	3'-1"	
5C6	2	9'-4½"	N6	19.58		3'-7"	4¾"	5'-0"	4¾"	3'-7"									3½"	
5C7	2	14'-4"	N12	29.93		0"	10"	13'-6"				0"			10"					
5C8	2	5'-10"	N12	12.18		3'-7"	2'-3"	0"				6⅝"			2'-2½"					
5C11	5	3'-9"	N1	19.58														3'-9"		
		POUR ① TOTAL = 230.05																		
		POUR ②																		
5C1	28	2'-4½"	N12	69.43		0"	10"	1'-6½"				0"			10"					
5C2	8	2'-3"	N12	18.79		0"	10"	1'-5"				0"			10"					
5C3	2	3'-11½"	N12	8.27		1'-2½"	2'-9"	0"				2'-7⅞"			8½"					
5C5	4	14'-3½"	10	59.68	3'-9"	6'-9½"	3'-9"											5'-7¼"	3'-1"	
5C6	4	9'-4½"	N6	39.15		3'-7"	4¾"	5'-0"	4¾"	3'-7"									3½"	
5C7	4	14'-4"	N12	59.86		0"	10"	13'-6"				0"			10"					
5C8	4	5'-10"	N12	24.36		3'-7"	2'-3"	0"				6⅝"			2'-2½"					
5C9	5	5'-6"	N1	28.71														5'-6"		
5C10	43	2'-3"	N1	101.0														2'-3"		
		POUR ② TOTAL = 409.25																		
		POUR ③																		
5C1	28	2'-4½"	N12	69.43		0"	10"	1'-6½"				0"			10"					
5C2	8	2'-3"	N12	18.79		0"	10"	1'-5"				0"			10"					
5C3	2	3'-11½"	N12	8.27		1'-2½"	2'-9"	0"				2'-7⅞"			8½"					
5C4	43	0'-6"	N1	22.45														6"		
5C5	2	14'-3½"	10	29.84	3'-9"	6'-9½"	3'-9"											5'-7¼"	3'-1"	
5C6	2	9'-4½"	N6	19.58		3'-7"	4¾"	5'-0"	4¾"	3'-7"									3½"	
5C7	2	14'-4"	N12	29.93		0"	10"	13'-6"				0"			10"					
5C8	2	5'-10"	N12	12.18		3'-7"	2'-3"	0"				6⅝"			2'-2½"					
5C11	5	3'-9"	N1	19.58														3'-9"		
		POUR ③ TOTAL = 230.05																		
		POUR ④																		
5C1	28	2'-4½"	N12	69.43		0"	10"	1'-6½"				0"			10"					
5C2	8	2'-3"	N12	18.79		0"	10"	1'-5"				0"			10"					
5C3	2	3'-11½"	N12	8.27		1'-2½"	2'-9"	0"				2'-7⅞"			8½"					
5C5	4	14'-3½"	10	59.68	3'-9"	6'-9½"	3'-9"											5'-7¼"	3'-1"	
5C6	4	9'-4½"	N6	39.15		3'-7"	4¾"	5'-0"	4¾"	3'-7"									3½"	
5C7	4	14'-4"	N12	59.86		0"	10"	13'-6"				0"			10"					
5C8	4	5'-10"	N12	24.36		3'-7"	2'-3"	0"				6⅝"			2'-2½"					
5C9	5	5'-6"	N1	28.71														5'-6"		
5C10	43	2'-3"	N1	101.0														2'-3"		
		POUR ④ TOTAL = 409.25																		

MARK	QTY.	LENGTH	TYPE	WEIGHT	A	B	C	D	E	F	G	H / H_1	H_2	J	K / K_1	K_2	L	O	R
		POUR ⑤																	
5C1	28	2'-4½"	N12	69.43		0"	10"	1'-6½"				0"			10"				
5C2	8	2'-3"	N12	18.79		0"	10"	1'-5"				0"			10"				
5C3	2	3'-11½"	N12	8.27		1'-2½"	2'-9"	0"				2'-7⅞"			8½"				
5C4	43	0'-6"	N1	22.45														6"	
5C5	2	14'-3½"	10	29.84	3'-9"	6'-9½"	3'-9"											5'-7¼"	3'-1"
5C6	2	9'-4½"	N6	19.58		3'-7"	4¾"	5'-0"	4¾"	3'-7"									3½"
5C7	2	14'-4"	N12	29.93		0"	10"	13'-6"				0"			10"				
5C8	2	5'-10"	N12	12.18		3'-7"	2'-3"	0"				6⅝"			2'-2½"				
5C11	5	3'-9"	N1	19.58														3'-9"	
		POUR ⑤ TOTAL = 230.05																	
		POUR ⑥																	
5C1	28	2'-4½"	N12	69.43		0"	10"	1'-6½"				0"			10"				
5C2	8	2'-3"	N12	18.79		0"	10"	1'-5"				0"			10"				
5C3	2	3'-11½"	N12	8.27		1'-2½"	2'-9"	0"				2'-7⅞"			8½"				
5C5	4	14'-3½"	10	59.68	3'-9"	6'-9½"	3'-9"											5'-7¼"	3'-1"
5C6	4	9'-4½"	N6	39.15		3'-7"	4¾"	5'-0"	4¾"	3'-7"									3½"
5C7	4	14'-4"	N12	59.86		0"	10"	13'-6"				0"			10"				
5C8	4	5'-10"	N12	24.36		3'-7"	2'-3"	0"				6⅝"			2'-2½"				
5C9	5	5'-6"	N1	28.71														5'-6"	
5C10	43	2'-3"	N1	101.0														2'-3"	
		POUR ⑥ TOTAL = 409.25																	
		POUR ⑦																	
5C1	28	2'-4½"	N12	69.43		0"	10"	1'-6½"				0"			10"				
5C2	8	2'-3"	N12	18.79		0"	10"	1'-5"				0"			10"				
5C3	2	3'-11½"	N12	8.27		1'-2½"	2'-9"	0"				2'-7⅞"			8½"				
5C4	43	0'-6"	N1	22.45														6"	
5C5	2	14'-3½"	10	29.84	3'-9"	6'-9½"	3'-9"											5'-7¼"	3'-1"
5C6	2	9'-4½"	N6	19.58		3'-7"	4¾"	5'-0"	4¾"	3'-7"									3½"
5C7	2	14'-4"	N12	29.93		0"	10"	13'-6"				0"			10"				
5C8	2	5'-10"	N12	12.18		3'-7"	2'-3"	0"				6⅝"			2'-2½"				
5C11	5	3'-9"	N1	19.58														3'-9"	
		POUR ⑦ TOTAL = 230.05																	
		POUR ⑧																	
5C1	28	2'-4½"	N12	69.43		0"	10"	1'-6½"				0"			10"				
5C2	8	2'-3"	N12	18.79		0"	10"	1'-5"				0"			10"				
5C3	2	3'-11½"	N12	8.27		1'-2½"	2'-9"	0"				2'-7⅞"			8½"				
5C5	4	14'-3½"	10	59.68	3'-9"	6'-9½"	3'-9"											5'-7¼"	3'-1"
5C6	4	9'-4½"	N6	39.15		3'-7"	4¾"	5'-0"	4¾"	3'-7"									3½"
5C7	4	14'-4"	N12	59.86		0"	10"	13'-6"				0"			10"				
5C8	4	5'-10"	N12	24.36		3'-7"	2'-3"	0"				6⅝"			2'-2½"				
5C9	5	5'-6"	N1	28.71														5'-6"	
5C10	43	2'-3"	N1	101.0														2'-3"	
		POUR ⑧ TOTAL = 409.25																	
		CULVERT TOTAL = 2557.20																	

DRAFTED BY: J.S. LeBLANC — 2016\894058\Design\Plans\BAR LIST.dgn
DESIGNED BY: J.S. LeBLANC — CHECKED BY: D. HUDDA
DESIGN SUPERVISOR: R. KARIS — CHECKED BY: D. HUDDA

ALTERED ON:

SIGNATURE:
STAMP:

AFFIXED ON: 6-21-16

SIGNATURE:
STAMP:

STATE OF NEW YORK
F. DAVID HUDDA
061048
LICENSED PROFESSIONAL ENGINEER

IT IS A VIOLATION OF LAW FOR ANY PERSON, UNLESS THEY ARE ACTING UNDER THE DIRECTION OF A LICENSED PROFESSIONAL ENGINEER, ARCHITECT, LANDSCAPE ARCHITECT, OR LAND SURVEYOR, TO ALTER AN ITEM IN ANY WAY. IF AN ITEM BEARING THE STAMP OF A LICENSED PROFESSIONAL IS ALTERED, THE ALTERING ENGINEER, ARCHITECT, LANDSCAPE ARCHITECT, OR LAND SURVEYOR SHALL STAMP THE DOCUMENT AND INCLUDE THE NOTATION "ALTERED BY" FOLLOWED BY THEIR SIGNATURE. THE DATE OF SUCH ALTERATION, AND A SPECIFIC DESCRIPTION OF THE ALTERATION.

REVISIONS

DATE	DESCRIPTION	BY	SYM.

NOTE: ALL WEIGHTS ARE IN POUNDS.

NEW YORK STATE THRUWAY AUTHORITY
DEPARTMENT OF ENGINEERING
200 SOUTHERN BLVD., ALBANY, N.Y. 12209

TITLE OF PROJECT: LOCK E-32 BYPASS CULVERT REPAIR
LOCATION OF PROJECT: TOWN OF PITTSFORD MONROE COUNTY
TITLE OF DRAWING: BAR LIST I

CONTRACT NUMBER: TAB 16-26C
DATE: 6/16/16
DRAWING NUMBER: BL-1

MARK	QTY.	LENGTH	TYPE	WEIGHT	A	B	C	D	E	F	G	H / H_1	H_2	J	K / K_1	K_2	L	O	R	REMARKS
		APPROACH WALL																		
		POUR (9)																		
5W1	35	2'-9¾"	N12	102.77		0"	10"	1'-11¾"				0"			10"					
5W2	9	3'-11½"	N12	37.19		1'-2½"	2'-9"					2'-7⅞"			8½"					
5W3	26	14'-4"	N12	389.06		0"	10"	13'-6"				0"			10"					
5W4	14	25'-0"	N1	365.40														25'-0"		
		POUR (9) TOTAL = 894.42																		
		POUR (10)																		
5W1	13	2'-9¾"	N12	38.17		0"	10"	1'-11¾"				0"			10"					
5W4	1	25'-0"	N1	26.10														25'-0"		
5W5	26	AVERAGE 4'-0½"	N1	109.71		LENGTH VARIES FROM 3'-7" TO 4'-6"														
5W6	5	23'-11"	N1	124.85														23'-11"		
5W69	2	10'-6"	N1	21.92														10'-6"		
5W70	12	1'-0"	N1	12.53														1'-0"		
		POUR (10) TOTAL = 333.28																		
		POUR (11)																		
5W1	30	2'-9¾"	N12	88.09		0"	10"	1'-11¾"				0"			10"					
5W2	7	3'-11½"	N12	28.93		1'-2½"	2'-9"					2'-7⅞"			8½"					
5W3	21	14'-4"	N12	314.24		0"	10"	13'-6"				0"			10"					
5W7	14	20'-3"	N1	88.09														20'-3"		
		POUR (11) TOTAL = 727.23																		
		POUR (12)																		
5W1	11	2'-9¾"	N12	32.30		0"	10"	1'-11¾"				0"			10"					
5W8	4	18'-3"	N1	76.21														18'-3"		
5W9	16	3'-6"	N1	58.46														3'-6"		
5W10	1	9'-6"	N1	9.92														9'-6"		
5W11	1	12'-8"	N11	13.22		0"	2'-10"	2'-8"	1'-8"	2'-8"					1'-10"	1'-10"	0"	11'-0"		
5W12	2	4'-7"	N1	9.57														4'-7"		
5W13	3	3'-10"	N1	12.00														3'-10"		
5W14	1	4'-4"	N1	4.52														4'-4"		
5W15	1	5'-6"	N1	5.74														5'-6"		
5W16	1	5'-2"	N1	5.39														5'-2"		
5W17	1	2'-10"	N1	2.09														2'-10"		
5W18	1	3'-0"	N1	3.13														3'-0"		
5W19	1	4'-0"	N1	4.18														4'-0"		
		POUR (12) TOTAL = 236.73																		
		POUR (13)																		
5W1	30	2'-9¾"	N12	88.09		0"	10"	1'-11¾"				0"			10"					
5W2	8	3'-11½"	N12	33.06		1'-2½"	2'-9"					2'-7⅞"			8½"					
5W3	19	14'-4"	N12	284.31		0"	10"	13'-6"				0"			10"					
5W7	10	20'-3"	N1	211.41														20'-3"		
5W20	4	21'-8"	N8	90.48		13'-0"	8"	1'-7"	8"	5'-9"								20'-4"		
5W19	2	4'-0"	N1	8.36														4'-0"		
5W21	2	10'-8"	N12	22.27		0"	10"	9'-10"				0"			10"					
		POUR (13) TOTAL = 737.98																		
		POUR (14)																		
5W1	11	2'-9¾"	N12	32.30		0"	10"	1'-11¾"				0"			10"					
5W8	5	18'-3"	N1	95.26														18'-3"		
5W9	21	3'-6"	N1	76.73														3'-6"		
		POUR (14) TOTAL = 204.29																		

MARK	QTY.	LENGTH	TYPE	WEIGHT	A	B	C	D	E	F	G	H / H_1	H_2	J	K / K_1	K_2	L	O	R	REMARKS
		POUR (15)																		
5W1	30	2'-9¾"	N12	88.09		0"	10"	1'-11¾"				0"			10"					
5W2	7	3'-11½"	N12	28.93		1'-2½"	2'-9"					2'-7⅞"			8½"					
5W3	21	14'-4"	N12	314.24		0"	10"	13'-6"				0"			10"					
5W7	14	20'-3"	N1	295.97														20'-3"		
		POUR (15) TOTAL = 727.23																		
		POUR (16)																		
5W1	11	2'-9¾"	N12	32.30		0"	10"	1'-11¾"				0"			10"					
5W8	4	18'-3"	N1	76.21														18'-3"		
5W9	16	3'-6"	N1	58.46														3'-6"		
5W10	1	9'-6"	N1	9.92														9'-6"		
5W11	1	12'-8"	N11	13.22		0"	2'-10"	2'-8"	1'-8"	2'-8"					1'-10"	1'-10"	0"	11'-0"		
5W12	2	4'-7"	N1	9.57														4'-7"		
5W13	3	3'-10"	N1	12.00														3'-10"		
5W14	1	4'-4"	N1	4.52														4'-4"		
5W15	1	5'-6"	N1	5.74														5'-6"		
5W16	1	5'-2"	N1	5.39														5'-2"		
5W17	1	2'-10"	N1	2.09														2'-10"		
5W18	1	3'-0"	N1	3.13														3'-0"		
5W19	1	4'-0"	N1	4.18														4'-0"		
		POUR (16) TOTAL = 236.73																		
		POUR (17)																		
5W1	35	2'-9¾"	N12	102.77		0"	10"	1'-11¾"				0"			10"					
5W2	10	3'-11½"	N12	41.32		1'-2½"	2'-9"					2'-7⅞"			8½"					
5W3	28	14'-4"	N12	419.00		0"	10"	13'-6"				0"			10"					
5W22	14	26'-3"	N1	383.67														26'-3"		
		POUR (17) TOTAL = 946.76																		
		POUR (18)																		
5W1	14	2'-9¾"	N12	41.11		0"	10"	1'-11¾"				0"			10"					
5W9	28	3'-6"	N1	102.31														3'-6"		
5W23	5	25'-3"	N1	131.81														25'-3"		
		POUR (18) TOTAL = 275.23																		
		APPROACH WALL TOTAL = 5319.88																		
		VALVE WELL																		
		POUR (19)																		
5V1	18	2'-3"	N12	42.28		0"	10"	1'-5"				0"			10"					
5V2	33	4'-10"	N12	166.52		0"	1'-4"	3'-6"				0"			1'-4"					
5V3	11	5'-0"	N8	57.42		3'-0"	1'-3"*	6"	3"	0"								3'-6"		*VARIES 1'-0¾" TO 1'-4½"
5V4	8	0'-6"	N1	4.18														6"		
5V5	2	24'-5"	N7	50.98		2'-10"	7'-9"	3'-4"	7'-8"	2'-10"					0"					
5V7	4	10'-0"	N1	41.76														10'-0"		
5V8	7	3'-6"	N1	25.58														3'-6"		
5V9	4	5'-7"	N1	23.32														5'-7"		
5V104	8	3'-7"	N12	29.93		0"	2'-2"	1'-5"				0"			2'-2"					
		POUR (19) TOTAL = 441.97																		

ALTERED ON:

SIGNATURE:
STAMP:

AFFIXED ON: 6-21-16

SIGNATURE:
STAMP:

STATE OF NEW YORK
F. DAVID HUDDA
061048
LICENSED PROFESSIONAL ENGINEER

IT IS A VIOLATION OF LAW FOR ANY PERSON, UNLESS THEY ARE ACTING UNDER THE DIRECTION OF A LICENSED PROFESSIONAL ENGINEER, ARCHITECT, LANDSCAPE ARCHITECT, OR LAND SURVEYOR, TO ALTER AN ITEM IN ANY WAY. IF AN ITEM BEARING THE STAMP OF A LICENSED PROFESSIONAL IS ALTERED, THE ALTERING ENGINEER, ARCHITECT, LANDSCAPE ARCHITECT, OR LAND SURVEYOR SHALL STAMP THE DOCUMENT AND INCLUDE THE NOTATION "ALTERED BY" FOLLOWED BY THEIR SIGNATURE. THE DATE OF SUCH ALTERATION, AND A SPECIFIC DESCRIPTION OF THE ALTERATION.

REVISIONS

DATE	DESCRIPTION	BY	SYM.

NOTE: ALL WEIGHTS ARE IN POUNDS.

NEW YORK STATE THRUWAY AUTHORITY
DEPARTMENT OF ENGINEERING
200 SOUTHERN BLVD., ALBANY, N.Y. 12209

TITLE OF PROJECT: LOCK E-32 BYPASS CULVERT REPAIR
LOCATION OF PROJECT: TOWN OF PITTSFORD MONROE COUNTY
TITLE OF DRAWING: BAR LIST II

CONTRACT NUMBER: TAB 16-26C
DATE: 6/17/16
DRAWING NUMBER: BL-2

DESIGN SUPERVISOR: R. KARIS
DESIGNED BY: J.S. LeBLANC
DRAFTED BY: J.S. LeBLANC
CHECKED BY: D. HUDDA
D. HUDDA
2016\B94058\Design\Plans\BAR LIST.dgn

MARK	QTY.	LENGTH	TYPE	WEIGHT	A	B	C	D	E	F	G	H / H_1	H_2	J	K / K_1	K_2	L	O	R	REMARKS
		POUR (20)																		
5V7	12	10'-0"	N1	125.28														10'-0"		
5V10	36	13'-9"	N1	516.78														13'-9"		
5V11	10	14'-6"	N1	151.38														14'-6"		
5V12	5	17'-5"	10	90.92	5'-3¾"	6'-9½"	5'-3¾"											5'-7¼"	3'-1"	
5V13	12	10'-1"	23	126.36		1'-6"	10¼"	3'-6"	9¾"	3'-5"	0"	10¼"	9¾"		0"	0"		5'-5"		
5V14	2	5'-0"	N1	10.44														5'-0"		
5V57	16	2'-7"	N12	43.20		1'-9"	10"	0"				2⅝"			9½"					
5V80	12	4'-0"	N1	50.11														4'-0"		
5V81	6	3'-0"	N1	18.79														3'-0"		
5V82	6	2'-8"	N1	16.70														2'-8"		
5V98	6	3'-11½"	T9	24.78	5½"	3'-0"					6"	3¾"								
5V99	6	2'-10½"	T9	18.00	5½"	1'-11"					6"	3¾"								
		POUR (20) TOTAL = 1192.74																		
		POUR (21)																		
5V7	14	10'-0"	N1	146.16														10'-0"		
5V8	8	3'-6"	N1	29.23														3'-6"		
5V15	2	5'-8½"	17	11.92		1'-3"	3'-7¼"	10¼"												
5V16	2	6'-3½"	17	13.14		1'-10"	3'-7¼"	10¼"												
5V17	2	7'-1"	17	14.79		2'-7"	3'-7¼"	10¼"												
5V18	1	16'-7"	N7	17.31		10¼"	3'-7½"	7'-7½"	3'-7½"	10¼"					0"					
5V19	5	24'-7"	N7	128.33		2'-9"	7'-9"	3'-8"	7'-8"	2'-9"					0"					
5V20	6	10'-9"	N17	67.34		5'-3"	1'-0"	2'-6"	2'-0"			1'-0"			0"			12'-6"		
5V21	2	10'-9"	N17	22.45		5'-3"	1'-0"	2'-6"	2'-0"			1'-0"			0"			15'-0"		
5V26	2	17'-0"	N17	35.50		11'-0"	1'-8"	2'-6"	1'-10"			1'-8"			0"			13'-6"		
5V27	2	17'-3"	N17	36.02		11'-3"	1'-8"	2'-6"	1'-10"			1'-8"			0"			13'-9"		
5V28	2	17'-9"	N17	37.06		11'-9"	1'-8"	2'-6"	1'-10"			1'-8"			0"			14'-3"		
5V57	25	2'-7"	N12	67.50		1'-9"	10"	0"				2⅝"			9½"					
5V83	5	8'-6"	N1	44.37														8'-6"		
5V84	5	7'-0"	N1	36.54														7'-0"		
5V85	5	12'-2"	N1	63.51														12'-2"		
5V86	1	4'-9"	N1	4.96														4'-9"		
5V87	1	4'-1"	N1	4.21														4'-1"		
5V88	1	3'-7"	N1	3.74														3'-7"		
5V89	1	2'-10"	N1	2.96														2'-10"		
5V90	5	12'-6"	N1	65.25														12'-6"		
5V91	2	3'-8"	N1	7.66														3'-8"		
5V92	2	2'-10"	N1	5.91														2'-10		
5V98	6	3'-11½"	T9	24.78	5½"	3'-0"					6"	3¾"								
5V99	6	2'-10½"	T9	18.00	5½"	1'-11"					6"	3¾"								
5V100	6	4'-5½"	T9	27.93	5½"	3'-6"					6"	3¾"								
5V101	6	3'-11½"	T9	24.80	5½"	3'-0"					6"	3¾"								
5V102	2	10'-0"	N1	20.88														10'-0"		
5V103	6	10'-0"	N1	62.64														10'-0"		
		POUR (21) TOTAL = 1044.89																		

MARK	QTY.	LENGTH	TYPE	WEIGHT	A	B	C	D	E	F	G	H / H_1	H_2	J	K / K_1	K_2	L	O	R	
		POUR (22)																		
5V7	16	10'-0"	N1	167.04														10'-0"		
5V19	6	24'-7"	N7	153.99		2'-9"	7'-9"	3'-8"	7'-8"	2'-9"					0"					
5V33	1	3'-0"	N1	3.13														3'-0"		
5V36	1	6'-9"	N12	7.05		0"	3'-4"	3'-5"				0"			3'-4"					
5V37	9	8'-7"	N12	80.65		0"	10"	7'-9"				0"			10"					
5V38	5	12'-0"	17	62.64		7'-9"	6"	3'-9"												
5V41	2	11'-3"	N17	23.49		5'-3"	1'-8"	2'-6"	1'-10"			1'-8"			0"			7'-9"		
5V42	2	17'-5"	N8	36.37		3'-0"	2'-6"	7'-6"	2'-6"	1'-11"								12'-5"		
5V43	6	13'-3"	N11	83.00		7'-9"	6"	2'-6"	2'-6"	0"		2'-6"	0"		0"	0"	0"	3'-0"		
5V44	4	5'-3"	N1	21.92														5'-3"		
5V45	4	17'-6"	17	73.08		7'-9"	2'-0"	7'-9"												
5V46	2	11'-9"	17	24.53		2'-0"	2'-0"	7'-9"												
5V47	3	7'-0"	N1	21.92														7'-0"		
5V57	25	2'-7"	N12	67.50		1'-9"	10"	0"				2⅝"			9½"					
5V93	24	7'-8"	N1	192.10														7'-8"		
5V94	7	12'-2"	N1	88.91														12'-2"		
5V95	7	12'-6"	N1	91.35														12'-6"		
5V98	6	3'-11½"	T9	24.80																
5V99	6	2'-10½"	T9	18.00																
5V100	9	4'-5½"	T9	41.89																
5V101	9	3'-11½"	T9	24.80																
		POUR (22) TOTAL = 1308.16																		
		POUR (23)																		
5V7	7	10'-0"	N1	73.08														10'-0"		
5V33	2	3'-0"	N1	6.26														3'-0"		
5V34	1	2'-0"	N1	2.09														2'-0"		
5V48	8	6'-2"	N1	51.50														6'-2"		
5V49	2	12'-3"	N1	25.58														12'-3"		
5V50	2	8'-8"	N1	18.10														8'-8"		
5V54	4	7'-6"	N1	31.32														7'-6"		
5V55	3	12'-5"	N1	38.89														12'-5"		
5V56	2	4'-3"	N12	9.05		0"	1'-3"	3'-0"				0"			1'-3"					
5V57	8	2'-7"	N12	21.60		1'-9"	10"	0"				2⅝"			9½"					
5V96	3	12'-2"	N1	25.40														12'-2"		
5V97	3	12'-6"	N1	39.15														12'-6"		
		POUR (23) TOTAL = 342.02																		
		VALVE WELL TOTAL = 3887.81																		

NOTE: ALL WEIGHTS ARE IN POUNDS.

ALTERED ON:

SIGNATURE:
STAMP:

AFFIXED ON: 6-21-16

SIGNATURE:
STAMP:

STATE OF NEW YORK
F. DAVID HUDDA
061048
LICENSED PROFESSIONAL ENGINEER

IT IS A VIOLATION OF LAW FOR ANY PERSON, UNLESS THEY ARE ACTING UNDER THE DIRECTION OF A LICENSED PROFESSIONAL ENGINEER, ARCHITECT, LANDSCAPE ARCHITECT, OR LAND SURVEYOR, TO ALTER AN ITEM IN ANY WAY. IF AN ITEM BEARING THE STAMP OF A LICENSED PROFESSIONAL IS ALTERED, THE ALTERING ENGINEER, ARCHITECT, LANDSCAPE ARCHITECT, OR LAND SURVEYOR SHALL STAMP THE DOCUMENT AND INCLUDE THE NOTATION "ALTERED BY" FOLLOWED BY THEIR SIGNATURE. THE DATE OF SUCH ALTERATION, AND A SPECIFIC DESCRIPTION OF THE ALTERATION.

REVISIONS

DATE	DESCRIPTION	BY	SYM

NEW YORK STATE THRUWAY AUTHORITY
DEPARTMENT OF ENGINEERING
200 SOUTHERN BLVD., ALBANY, N.Y. 12209

TITLE OF PROJECT: LOCK E-32 BYPASS CULVERT REPAIR
LOCATION OF PROJECT: TOWN OF PITTSFORD, MONROE COUNTY
TITLE OF DRAWING: BAR LIST III

CONTRACT NUMBER: TAB 16-26C
DATE: 6/20/16
DRAWING NUMBER: BL-3

DESIGN SUPERVISOR: R. KARIS
DESIGNED BY: J.S. LeBLANC
DRAFTED BY: J.S. LeBLANC
CHECKED BY: D. HUDDA

2016\894058\Design\Plans\BAR LIST.dgn

MARK	QTY.	LENGTH	TYPE	WEIGHT	A	B	C	D	E	F	G	H / H_1	H_2	J	K / K_1	K_2	L	O	R
		OUTLET																	
		POUR (24)																	
5W24	64	2'-1¼"	N12	140.59		0"	10"	1'-3¼"				0"			10"				
5W25	51	6'-4"	N12	337.21		0"	10"	5'-6"				0"			10"				
5W26	6	24'-10"	N1	155.56														24'-10"	
5W27	6	26'-1½"	N17	163.65		2'-11"	20'-6"	2'-8½"	0"			4'-11⅝"			19'-10½"			25'-6"	
5W28	20	6'-5½"	N12	134.85		0"	10"	5'-7½"				2"			9'⅝16"				
5W29	1	22'-4½"	17	23.36		0"	18'-6"	3'-10½"											
5W30	1	22'-2½"	17	23.19		0"	18'-6"	3'-8½"											
5W31	1	22'-1"	17	23.06		0"	18'-6"	3'-7"											
5W32	1	22'-10"	17	23.84		1'-0"	18'-6"	3'-4"											
5W33	1	23'-8"	17	24.71		2'-0"	18'-6"	3'-2"											
5W34	1	24'-6"	17	25.58		3'-0"	18'-6"	3'-0"											
5W35	1	5'-9"	N1	6.00														5'-9"	
5W36	1	2'-3"	N12	2.35		0"	10"	1'-5"				0"			10"				
5W65*	1	3'-9"	N12	3.92		0"	10"	2'-11"				0"			10"				
5W66*	1	3'-0"	N12	3.13		0"	10"	2'-2"				0"			10"				
5W68*	1	1'-6"	N12	1.57		0"	10"	8"				0"			10"				
		POUR (24) TOTAL = 1092.57																	
		POUR (25)																	
5W26	10	24'-10"	N1	259.27														24'-10"	
5W27	2	26'-1½"	N17	54.55		2'-11"	20'-6"	2'-8½"	0"			4'-11⅝"			19'-10½"			25'-6"	
5W36	36	2'-3"	N12	84.56		0"	10"	1'-5"				0"			10"				
5W37	26	8'-6"	N1	230.73														8'-6"	
5W38	17	AVERAGE 13'-0"	N1	230.72		LENGTH VARIES FROM 9'-0" TO 16'-8"													
5W39	4	26'-6"	N1	110.66														26'-6"	
5W40	8	6'-0"	N1	50.11														6'-0"	
5W41	2	21'-0"	N1	43.85														21'-0"	
5W42	2	20'-1"	N1	41.93														20'-1"	
5W43	2	16'-6"	N1	34.45														16'-6"	
5W44	2	12'-4"	N1	25.75														12'-4"	
5W45	2	8'-7"	N1	17.92														8'-7"	
5W46	2	10'-8"	N1	22.27														10'-8"	
5W47	2	7'-4"	N1	15.31														7'-4"	
5W48	1	24'-1"	17	25.14		2'-9"	18'-6"	2'-10"											
5W49	1	18'-6"	N1	19.31														18'-6"	
5W50	1	6'-2"	N1	6.44														6'-2"	
5W51	1	4'-8"	N1	4.87														4'-8"	
5W52	2	4'-1"	N1	8.53														4'-1"	
5W53	1	5'-0"	N1	5.22														5'-0"	
5W54	1	7'-3"	N1	7.57														7'-3"	
5W55	3	2'-8"	N1	8.35														2'-8"	
5W56	5	1'-9"	N1	9.14														1'-9"	
5W57	2	1'-7"	N1	3.31														1'-7"	
5W58	2	2'-1"	N1	4.35														2'-1"	
5W59	2	2'-10"	N1	5.92														2'-10"	
5W60	2	1'-11"	N1	4.00														1'-11"	
5W61	2	1'-5"	N1	3.00														1'-5"	
5W62	2	1'-4"	N1	2.78														1'-4"	
5W63	1	3'-0"	N1	3.13														3'-0"	
5W64	1	1'-10"	N1	1.91														1'-10"	
		POUR (25) TOTAL = 1345.05																	
		OUTLET TOTAL = 2437.62																	

MARK	QTY.	LENGTH	TYPE	WEIGHT	A	B	C	D	E	F	G	H / H_1	H_2	J	K / K_1	K_2	L	O	R	REMARKS
		PRIMARY INLET																		
		POUR (26)																		
5I1	21	3'-9"	N12	82.22		0"	10"	2'-11"				0"			10"					
5I2	18	2'-11"	N12	54.81		0"	10"	2'-1"				0"			10"					
5I3	10	4'-0"	N12	41.76		1'-3"	2'-9"	0"				2'-7⅞"			8½"					
5I4	12	2'-5"	N10	30.28		0"	10"	4"	1'-3"			1'-1⅝"			9¼"					
5I5	12	2'-5"	N17	30.28		0"	1'-3"	4"	10"			4¼"			1'-1¾"					
5I6	7	16'-5"	N1	119.97														16'-5"		
5I7	6	15'-10"	N12	99.18		0"	10"	15'-0"				0"			10"					
5I8	4	16'-5"	N12	68.56		0"	1'-5"	15'-0"				0"			1'-5"					
5I9	27	7'-4"	17	206.71		8"	6'-0"	8"												
5I10	32	3'-5"	T1	114.14		1'-0"	1'-6"	1'-0"	1'-6"			3¾"								
5I11	16	3'-8"	T1	61.25		1'-3"	1'-6"	1'-3"	1'-6"			3¾"								
5I12	27	8'-3"	N1	232.55														8'-3"		
5I13	7	4'-3"	N12	31.06		0"	1'-0"	3'-3"				0"			1'-0"					
5I14	7	4'-9"	N12	34.71		0"	1'-6"	3'-3"				0"			1'-6"					
5I15	24	3'-11"	T1	94.0		1'-6"	1'-6"	1'-6"	1'-6"			3¾"								
5I16	3	33'-6"	N1	104.92														33'-6"		
5I17	1	14'-3"	N1	14.88														14'-3"		
5I18	2	33'-6"	N1	69.95														33'-6"		
		PRIMARY INLET TOTAL = 1491.23																		
		MANHOLE PLUG																		
5P1	4	2'-5½"	N12	14.76		0"	1'-0"	1'-5½"				0"			1'-0"					ASTM A449 THREADED ROD
5P2	16	2'-7"	N12	43.20		0"	10"	1'-9"				2½"			9'⅝16"					
		MANHOLE PLUG TOTAL = 57.96																		
		HORIZONTAL JOINTS (TUNNEL)																		
5T1	20	2'-3"	N12	563.80		0"	6"	1'-9"				0"			6"					
		HORIZONTAL JOINTS TOTAL = 563.80																		
		BRICK VOIDS (TUNNEL)																		
4C1	30	1'-8"	17	33.39		8"	1'-0"	0"												APPROXIMATE NUMBER REQD.
		BRICK VOIDS TOTAL = 33.39																		
		SECONDARY INLET																		
5R1	24	2'-9"	17	69.0		0"	6"	2'-3"												
5R2	10	6'-9"	17	71.0		0"	6"	6'-3"												
5R3	16	4'-0"	N1	67.0																
5R4	10	4'-6"	N1	47.0																
		SECONDARY INLET TOTAL = 254.00																		
		TOTAL BAR REINFORCEMENT UNDER ITEM 556.0201 = 16602.89																		
		TOTAL BAR REINFORCEMENT UNDER ITEM 556.0201 FOR ESTIMATE = 16700.00																		

NOTE: ALL WEIGHTS ARE IN POUNDS.

DESIGN SUPERVISOR: R. KARIS
DESIGNED BY: J.S. LeBLANC
DRAFTED BY: J.S. LeBLANC
CHECKED BY: D. HUDDA
D. HUDDA
2016\B94058\Design\Plans\BAR LIST.dgn

ALTERED ON:
SIGNATURE:
STAMP:

AFFIXED ON: 6-21-16
SIGNATURE:
STAMP:
STATE OF NEW YORK · F. DAVID HUDDA · LICENSED PROFESSIONAL ENGINEER · 061048

IT IS A VIOLATION OF LAW FOR ANY PERSON, UNLESS THEY ARE ACTING UNDER THE DIRECTION OF A LICENSED PROFESSIONAL ENGINEER, ARCHITECT, LANDSCAPE ARCHITECT, OR LAND SURVEYOR, TO ALTER AN ITEM IN ANY WAY. IF AN ITEM BEARING THE STAMP OF A LICENSED PROFESSIONAL IS ALTERED, THE ALTERING ENGINEER, ARCHITECT, LANDSCAPE ARCHITECT, OR LAND SURVEYOR SHALL STAMP THE DOCUMENT AND INCLUDE THE NOTATION "ALTERED BY" FOLLOWED BY THEIR SIGNATURE. THE DATE OF SUCH ALTERATION, AND A SPECIFIC DESCRIPTION OF THE ALTERATION.

REVISIONS

DATE	DESCRIPTION	BY	SYM.

NEW YORK STATE THRUWAY AUTHORITY
DEPARTMENT OF ENGINEERING
200 SOUTHERN BLVD., ALBANY, N.Y. 12209

TITLE OF PROJECT: LOCK E-32 BYPASS CULVERT REPAIR
LOCATION OF PROJECT: TOWN OF PITTSFORD, MONROE COUNTY
TITLE OF DRAWING: BAR LIST IIII

CONTRACT NUMBER: TAB 16-26C
DATE: 6/20/16
DRAWING NUMBER: BL-4