SECTION 9 - JOINTS

9.1 - JOINT TYPES

In the following subsections, the types of joints commonly used on Authority bridges are outlined. Eliminating or locating the joint behind the backwalbr in the approach pavement should always be investigated. However, when a joint is required that will be in an area directly above other bridge components, the likelihood and consequences of leakage and maintenance, along with service life and cost need to be carefully considered. Joint seals and their associated components are exposed to vehicle wheel loadings, snow plow impacts, roadway debris buildup, and other conditions in addition to providing a seal that must accommodate expansive and other movements. Joint seals and their associated components should also consider the extent of effort and traffic control required during routine cleaning and when repairs become necessary. Table 9.1 details the various parameters involved in the selection of a joint. Every application should be treated as unique and evaluated with respect to its service life and requirements.

9.2 - JOINT SELECTION CRITERIA

The obvious choice of joint is none at all. Any time a joint can be eliminated, either by rearranging bearings and/or spans; or by utilizing an integral abutment or jointless detail, that joint should be eliminated, unless the cost is prohibitive. Section 4 of this manual contains details, criteria and limitations on the use of integral abutments and jointless bridges.

JOINT SELECTION TABLE

JOINT TYPE	RANGE OF MOVEMENT[1]	MAXIMUM SKEW	APPROX. COST PER FOOT[3]		EXPECTED LIFE (YEARS)		RECOMMENDED USES		
			UPSTATE[2]	DOWNSTATE	ANCHORAGE	SEAL	NEW DECK	APPROACH SLAB END[6]	REHAB.[5]
JOINTLESS	See Section 4.7	See Section 4.7	NA	NA	Life of Superstructure	Life of Superstructure	Yes	No	20+
COLD POURED JOINTS	0 – 4 in.	None	$120	No Data Available	10	10	No	No	< 15
HOT POURED JOINTS	0 – 2 in.	45°	$260	$300	No Anchorage	Same as Pavement	No	No	< 10
INFLATED NEOPRENE	0 – 3 in.	45°	$150	$200	10	10	No	No	< 15
PREFORMED SILICONE	0 – 3 in.	35°	$150	$200	10	10	No	Yes	< 15
STRIP SEAL	0 – 4 in.	35°	$260	$300	30	10	Yes	Yes	15+
ARMORED	0 – 3 in.	45°	$180	$280	20	10	([4])	([4])	([4])
VERMONT (OPEN)	0 – 4 in.	45°	$270	$340	Life of Superstructure	30	Yes	Yes	15+
VERMONT (FINGER)	4 in. – 15 in.	35°	$850	$1500	Life of Superstructure	30	Yes	Yes	15+
MODULAR	6 in. – 30 in.	45°	$600 - $1350	$750 - $2000	30	15	Yes	Yes	Yes

TABLE 9.1

NOTES:
1. Range of movement is measured along centerline of roadway.
2. For this purpose, upstate is defined as all counties except Orange, Rockland and Westchester.
3. The unit price for the joint system does not includes the removal of the existing joint or any concrete or pavement removal necessary prior to installation of the new joint. The price only includes material, fabrication and installation costs for the joint (i.e. new install.).
4. New York State Department of Transportation owned joints only.
5. Use with this remaining deck life (years).
6. Represents joints required at the end of the approach slab between the approach slab and the sleeper slab or the sleeper slab and the concrete approach pavement depending on the sleeper slab configuration.

9.2.1 - COLD POURED JOINTS

This joint system is composed of a primer material suited to the application surface; a pourable, two component chemical mix, which is applied cold; and a backer rod. The diameter of the backer rod should be ¼ inch larger than the joint opening at its widest state (coldest ambient temperature). There are two different formulations: One flows and isself-leveling, the other is more viscous and is used for vertical applications. An elastomeric concrete header, if required by the system manufacturer, should be paid for under a separate item. This joint system is illustrated on Detail 9.2.1.

The advantages of this joint system include:

(a) It can be used in vertical applications.

(b) Vertical surface applications such as curbs and barriers, and surfaces can be irregular.

(c) Traffic can resume immediately after installation or repair.

(d) It bonds to asphalt, concrete or steel.

(e) A two year performance bond is required by the specification.

(f) Repairs to the seal are limited to the point of failure and do not require entire seal removal

(g) Low cost.

(h) Accumulates little debris and therefore requires less routine cleaning.

The disadvantages of this joint system include:

(a) Application surface must be dry and sound.

(b) The minimum bond depth of the seal is 2 inches.

(c) Short life (10 years).

(d) Shall only be used on existing decks.

(e) Limited to smaller expansion movements.

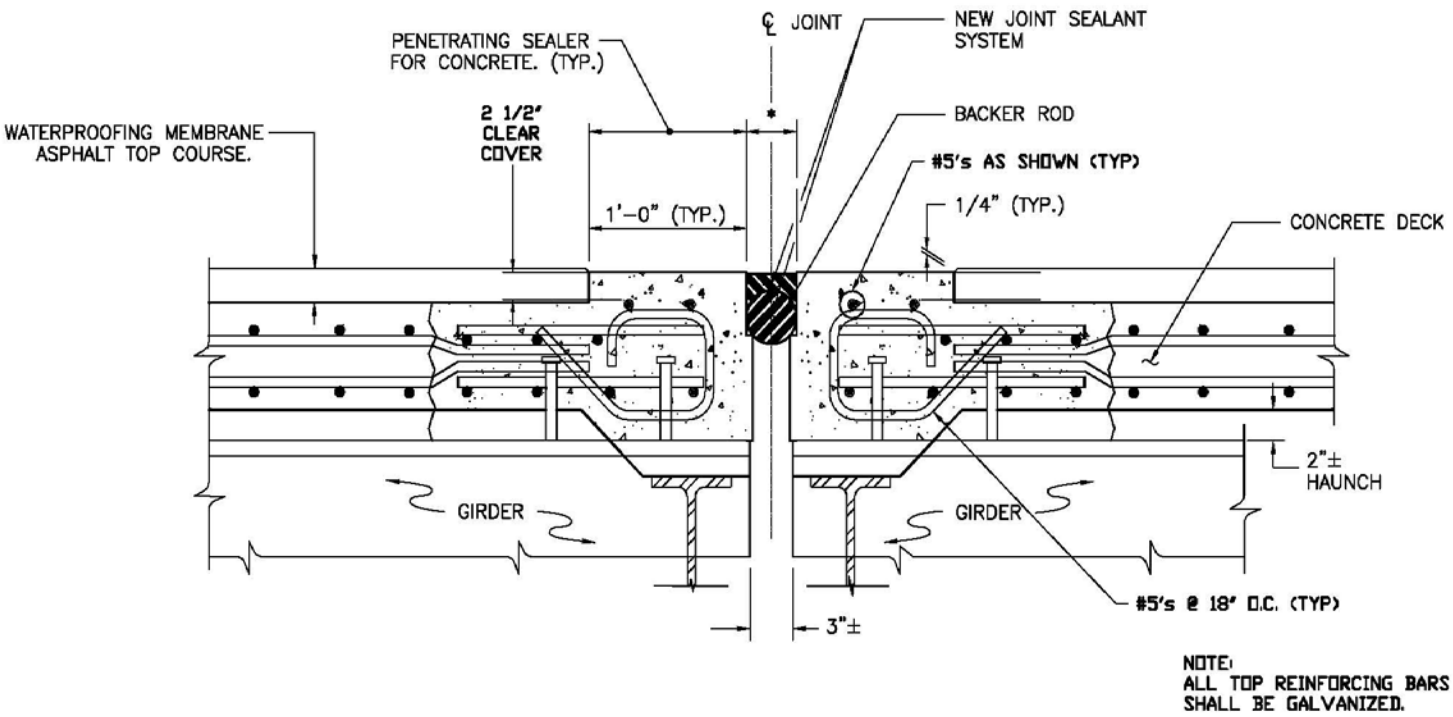

NOTE:
ALL TOP REINFORCING BARS SHALL BE GALVANIZED.

COLD POURED JOINT – EXISTING DECK

DETAIL 9.2.1

N.T.S.

* - DIMENSION VARIES WITH TEMPERATURE.

j:\orangebk\ENGLISH\921

9.2.2 - HOT POURED JOINTS

This joint system is composed of a steel plate bridging the expansion/contraction gap; a layer of hot asphalt binder. The joint is typically two layers of hot aggregate of a larger size coated with hot binder and agitated; and a layer of smaller aggregate, precoated with hot binder. The larger aggregate layer is not less than ¾ inch thick, and not more than 1½ inches thick. This (these) layer(s) shall be placed to a level approximately 7/8 inch from the top of the joint. This joint system is illustrated in Detail 9.2.2.

The advantages of this joint system include:

(a) A two year performance bond is required by the specification.

(b) The surface of this joint system can be milled along with adjoining deck during future construction.

(c) The joint usually heals itself or can be repaired with crack sealing tar.

(d) This system can be installed at low temperatures.

(e) This system bonds to concrete or asphalt.

(f) Smooth ride quality. Reduces wheel and snow plow impact damage.

(g) No debris accumulation nor routine cleaning required.

The disadvantages of this joint system include:

(a) Application surface must be dry and sound.

(b) The minimum depth of the joint is 3 inches.

(c) Short life (10 years).

(d) Shall only be used on existing decks.

(e) Curbs and sidewalks require additional consideration and details.

J:\ORANGEBK\ENGLISH\922

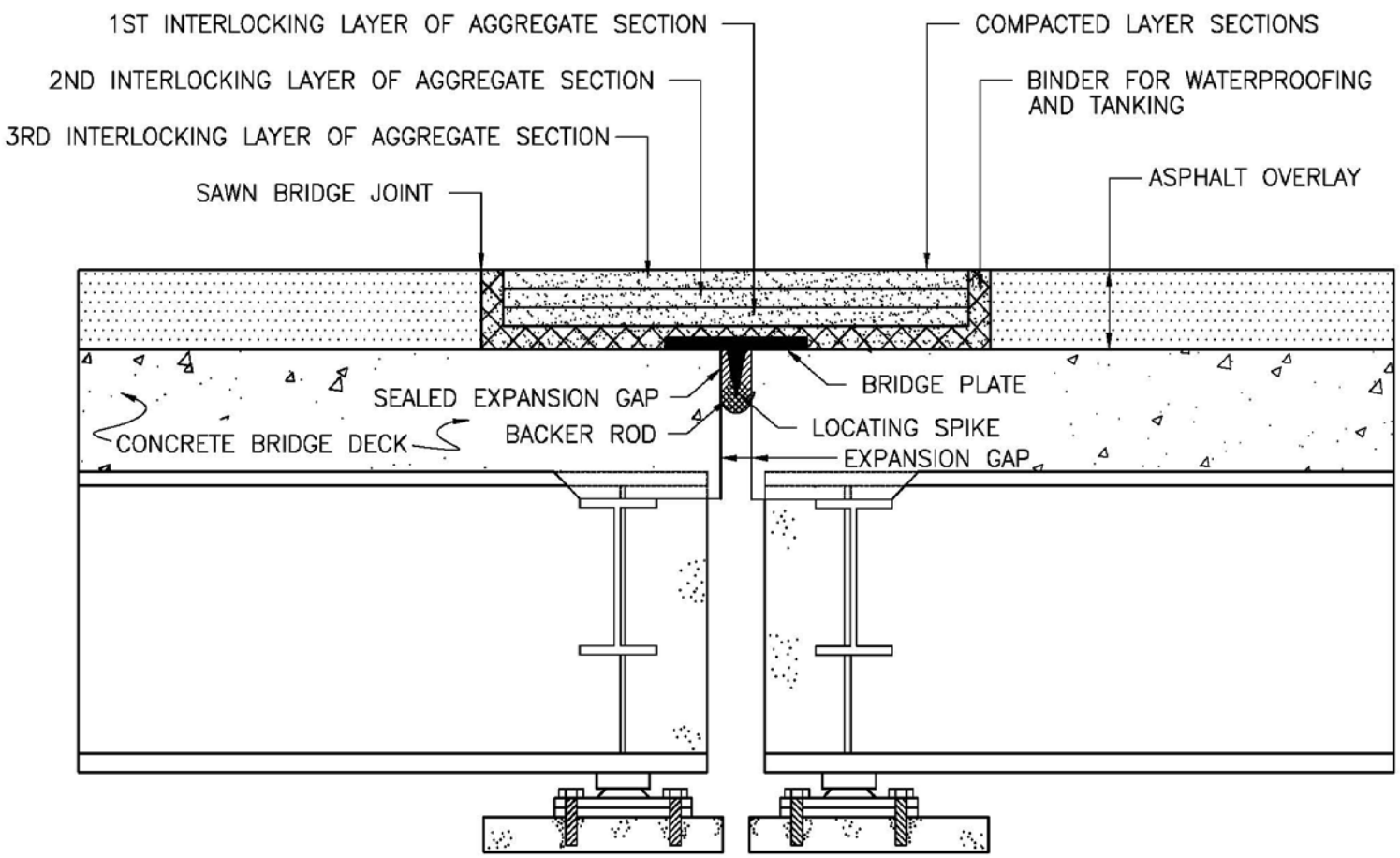

HOT POURED (plug type) JOINT

DETAIL 9.2.2

N.T.S.

9.2.3 - INFLATED NEOPRENE SEAL

This system is composed of a preformed hollow elastomeric neoprene seal and a two-component epoxy adhesive. The seal is inflated after placem ent and deflated after the adhesive has cured, leaving the seal bonded to the walls. This joint system is illustrated on Detail 9.2.3.

The advantages of this joint system include:

(a) The system employs no hardware.

(b) The adhesive bonds to concrete or steel.

(c) The Authority requires a 5-year warranty.

(d) Roadway can be reopened to traffic immediately after installation.

The disadvantages of this joint system include:

(a) Surface temperature must be above 50 degrees.

(b) All surfaces must be dry and sound prior to installation.

(c) Vertical surfaces must be clean, smooth, and sound.

(d) Short life (10 years).

(e) Shall only be used on existing decks.

(f) Requires compressed air to inflate.

(e) Localized failure allows debris to get into adjacent sections of tubing.

(f) More difficult to repair localized failures. May require entire seal replacement.

(g) Debris can accumulate and require routine cleaning.

J:\ORANGEBK\ENGLISH\923

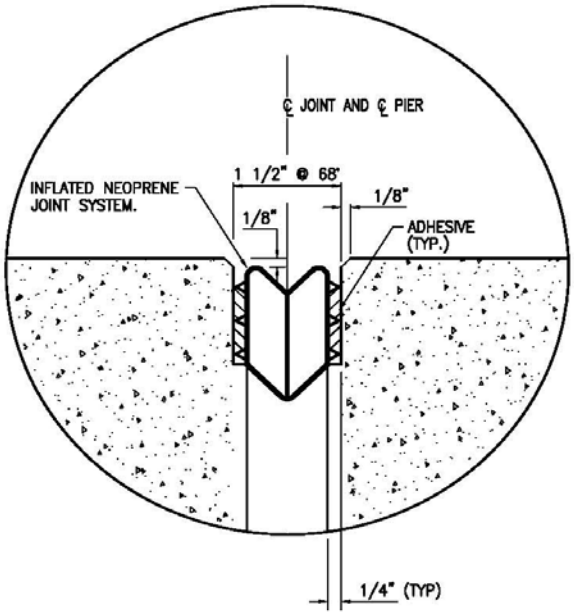

DETAIL A
N.T.S

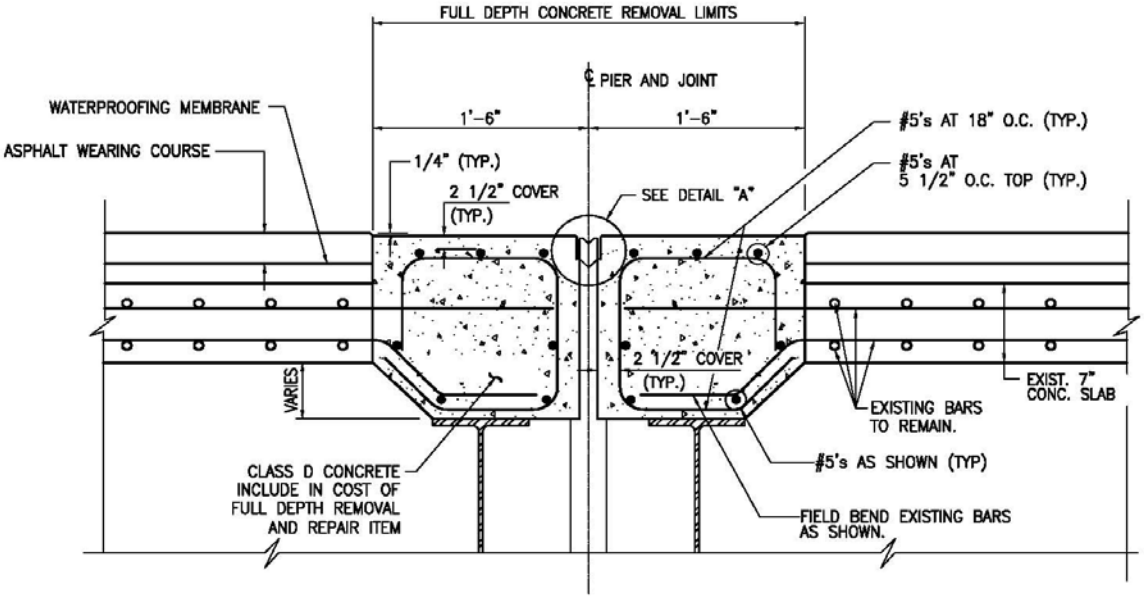

INFLATED NEOPRENE SEAL – EXISTING DECK
DETAIL 9.2.3
N.T.S

NOTE:
ALL NEW REINFORCING BARS SHALL BE GALVANIZED.

9.2.4 - PREFORMED SILICONE JOINT

This system is composed of a preformed silicone seal adhered to a concrete header. The concrete surface is prepared by applying the accompanying primer. After the primer has cured, the silicone seal is attached to the header with a locking adhesive. This joint systemis illustrated on Detail 9.2.4.

The advantages of this joint system include:

(a) The system employs no hardware.

(b) The adhesive bonds to concrete or steel.

(c) The joint system includes a 2-year warranty on workmanship and performance.

(d) Roadway can be reopened to traffic immediately after installation.

The disadvantages of this joint system include:

(a) Surface temperature must be above 50 degrees.

(b) All surfaces must be dry prior to installation.

(c) Vertical surfaces must be clean and smooth.

(d) Short life (10 years).

(e) Shall only be used on existing decks.

(f) Significant amount of debris can accumulate requiring frequent cleaning.

(g) Localized repairs are lim ited to sm all puncture holes. Torn or larger damaged sections may require entire seal replacement.

J:\ORANGEBK\ENGLISH\924

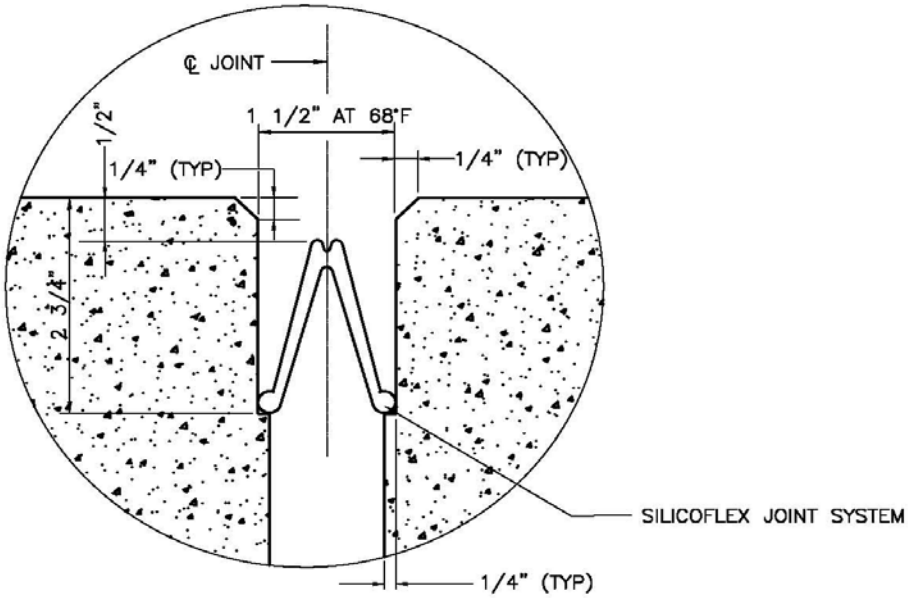

DETAIL 'A'

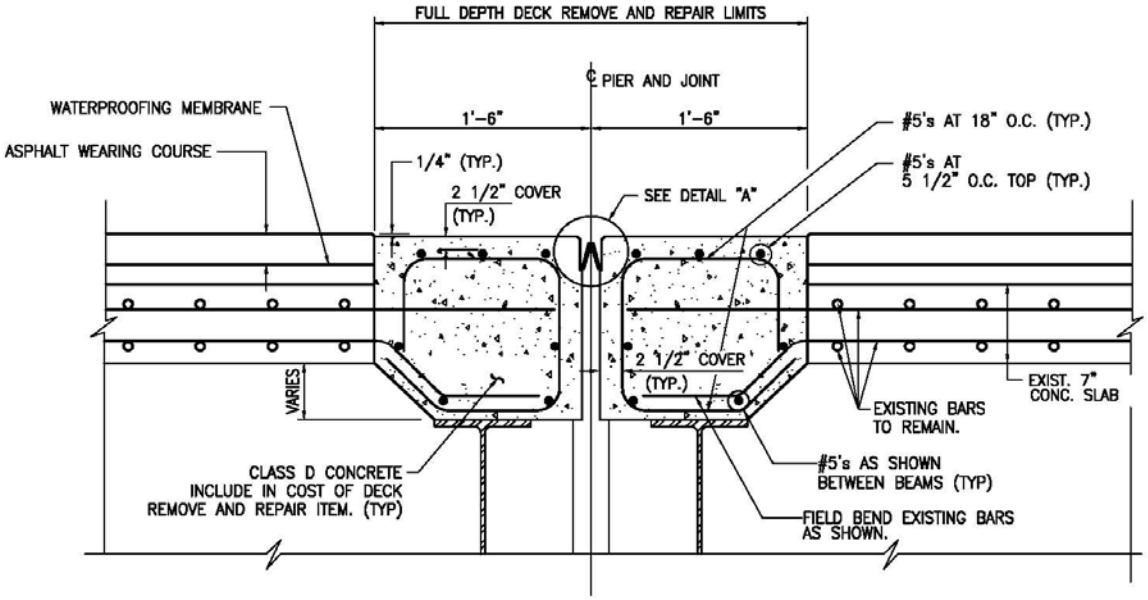

PREFORMED SILICONE JOINT – EXISTING DECK

DETAIL 9.2.4

N.T.S

NOTE:
ALL NEW REINFORCING BARS SHALL BE GALVANIZED.

9.2.5 - STRIP SEALS

This joint system consists of a steel extrusion, rigidly connected to the superstructure and substructure; and a strip seal gland, with a positive connection to the extrusion. The gland provided must be double-walled and installed as one continuous piece at each joint location. The steel extrusion and steel anchorage must conform to **ASTM** A-709, Grade 50**W** specifications. This joint system is illustrated on Details 9.2.5(a), 9.2.5(b), & 9.2.5(c).

The advantages of this joint system include:

(a) The bridge-to-extrusion and the extrusion-to-seal connections are mechanical in nature and not reliant upon adhesives or epoxies.

(b) The gland can be replaced by maintenance forces, without the removal and replacement of the entire system.

(c) Under normal circumstances, the anchorage will last for the life of the deck.

(d) Provides a wider range of thermal movement.

The disadvantages of this joint system include:

(a) A hardware failure can be dangerous and should be fixed immediately.

(b) A seal puncture can be repaired by patching for the short term. Long term repair requires the replacement of the gland.

(c) Seal replacement can be difficult.

(d) High cost due to anchorage hardware.

J:\ORANGEBK\ENGLISH\925a&925b&925c

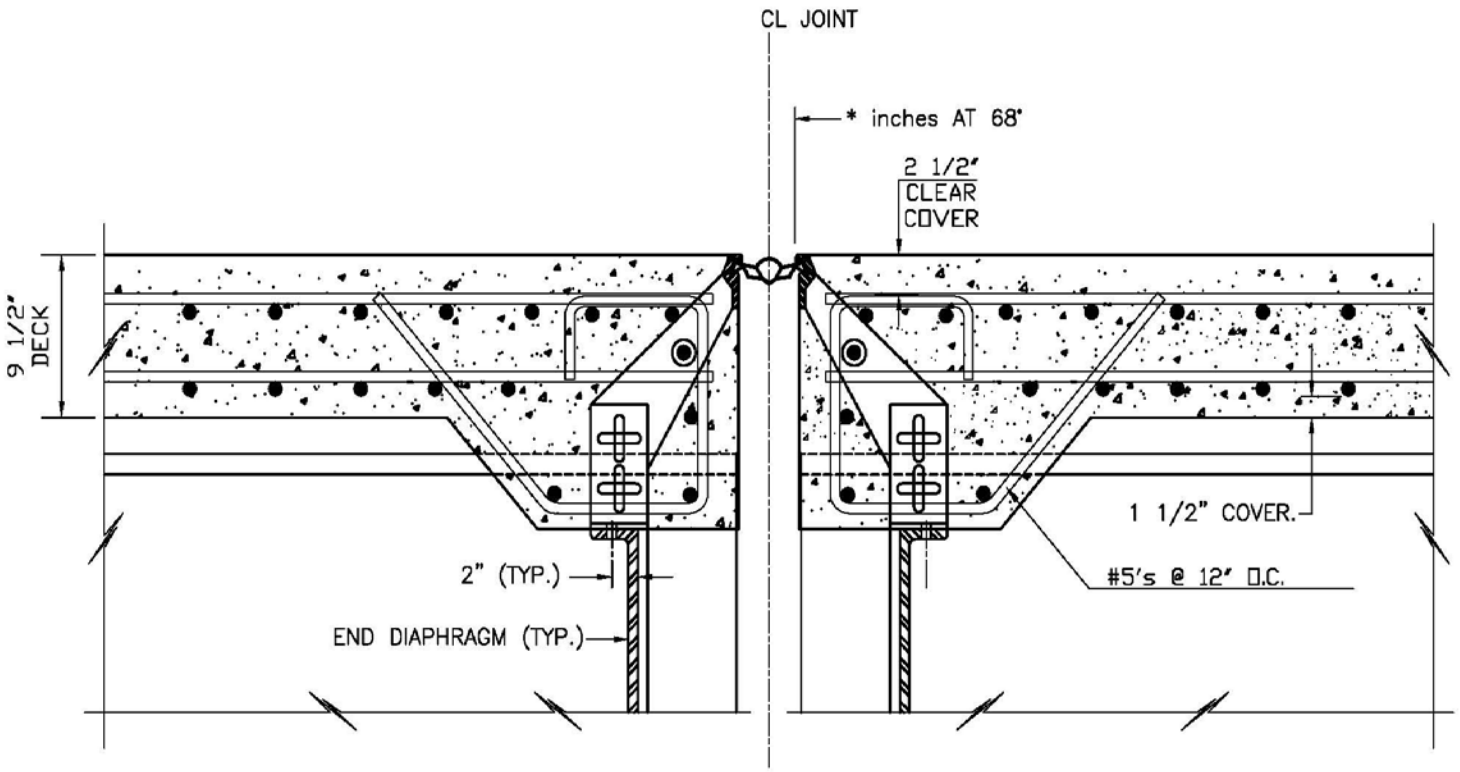

STRIP SEAL JOINT – NEW MONOLITHIC DECK

DETAIL 9.2.5(a)

NOT TO SCALE

NOTE:
ALL REINFORCING BARS
SHALL BE GALVANIZED.

* - DIMENSION VARIES WITH JOINT SIZE.

J:\ORANGEBK\ENGLISH\925a&925b&925c

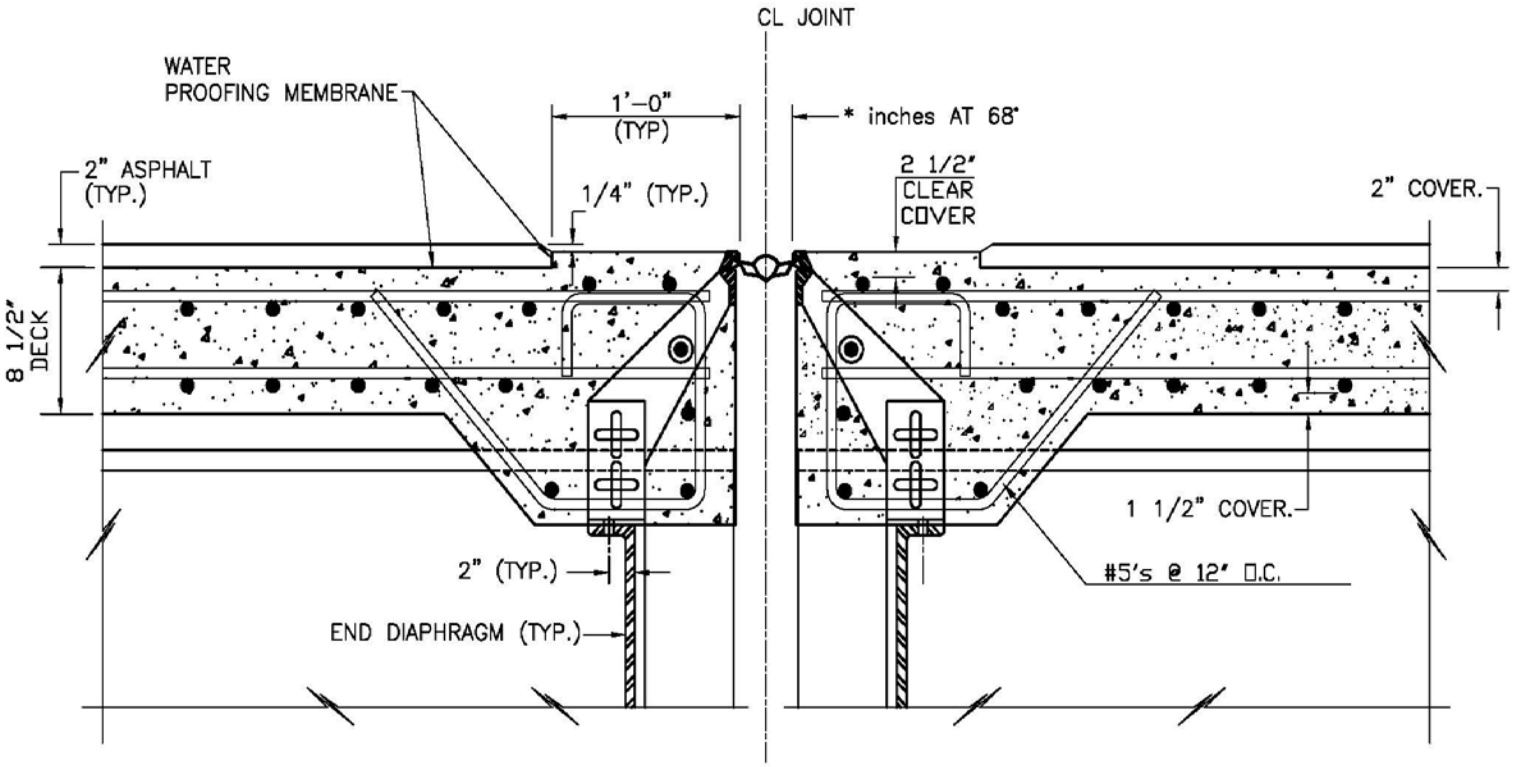

STRIP SEAL JOINT - NEW 2-COURSE DECK

DETAIL 9.2.5(b)

NOT TO SCALE

NOTE:
ALL REINFORCING BARS
SHALL BE GALVANIZED.

* - DIMENSION VARIES WITH JOINT SIZE.

J:\ORANGEBK\ENGLISH\925a&925b&925c

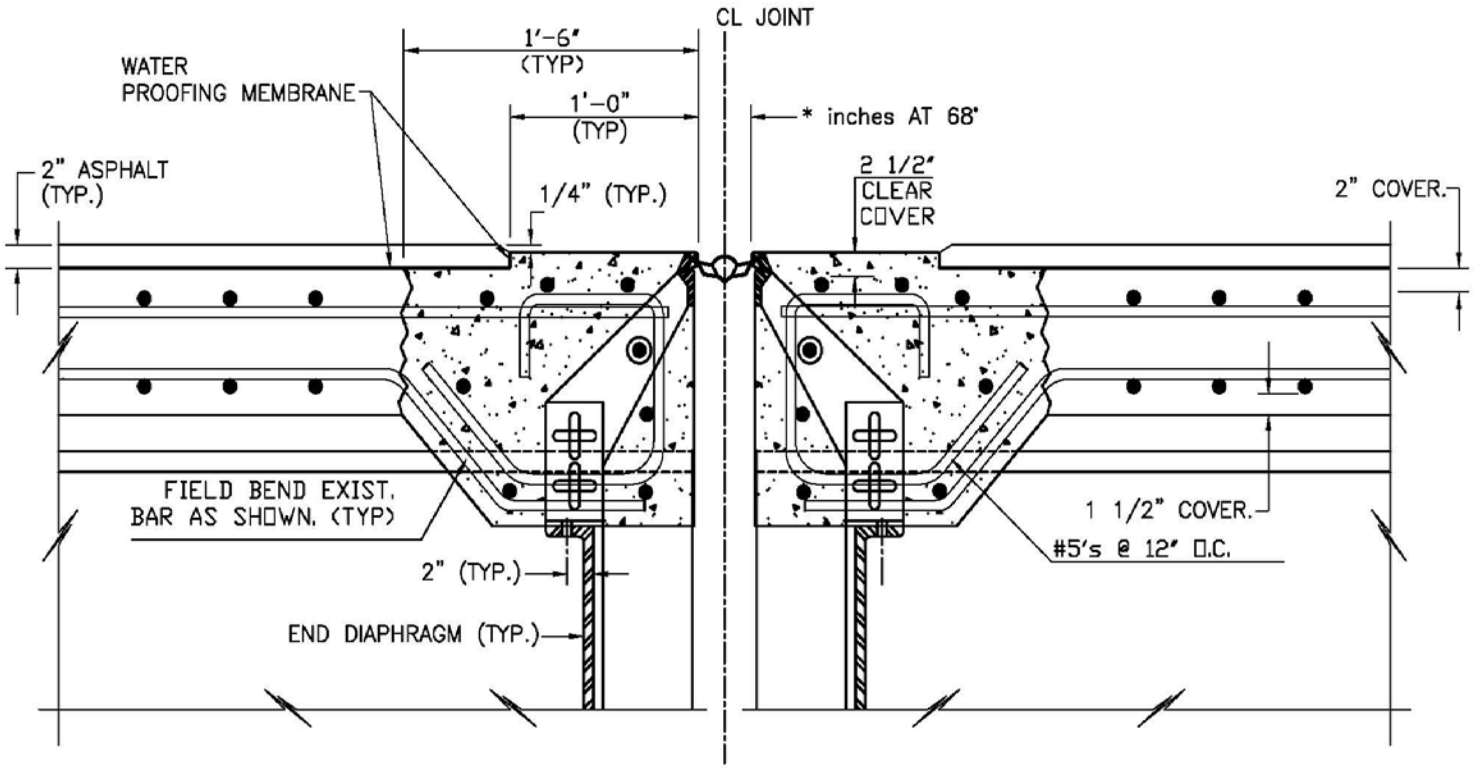

STRIP SEAL JOINT - EXISTING DECK

DETAIL 9.2.5(c)

NOT TO SCALE

NOTE:
ALL NEW REINFORCING BARS
SHALL BE GALVANIZED.

* - DIMENSION VARIES WITH JOINT SIZE.

9.2.6 - ARMORED JOINTS

This joint system consists of steel angles, anchored to the concrete elements and is supplied with either a compression seal or an elastomeric sealer. There is no rigid connection to the steel superstructure. These joints are fastened to the top surface of the backwall and a block out in the deck through the use of slotted angles and expansion anchors. Separate headers are then poured to complete the installation. See current NYSDOT **BD** sheets for details.

There is no mechanical connection between the sealand the armoring angles. The compression seal is supported by 3/8 inch square bars and a polyurethane adhesive provides a bond to the angles. A polyurethane bedding sealant bonds the elastomeric seal to the armoring angles.

Armored joints are the most commonly used joints on NYSDOT constructed bridges. These joints are **not** to be used on Authority structures due to their lack of positive anchorage and expense compared with other similar joint systems available. On combined Authority-NYSDOT projects, these joints shall only be used when specifically requested by NYSDOT and they are providing funding for the joint.

9.2.7 - VERMONT JOINTS (OPEN & FINGER)

This joint system consists of angles cast into the headers and rigidly connected to the girders with bolts; a preformed fabric trough clamped down to the angles with countersunk bolts through steel plates at finished grade. All steel must conform to **ASTM** A-709 GRADE 36 specifications

(galvanized). For smaller movements, 0 to 4 inches,the top plates shall be rectangular and leave the joint top open. For larger movements, over 4 to 15 inches, the top plates shall be cut with "fingers" that interconnect at the joint opening to provide support for the wheel loads. This joint system is illustrated on Details 9.2.7(a), 9.2.7(b), & 9.2.7(c).

The advantages of this joint system include:

(a) All joint to superstructure connections are mechanical and watertight. They do not rely on adhesives or epoxies for structural integrity or water retention ability.

(b) A damaged trough can be replaced by maintenance forces with minimal tools and time without the need for excavation into the anchorage system.

(c) Under normal circumstances, the entire joint system will last the life of the deck. Excellent performance history.

(d) Trough system channels water off the structure as well as provide for bridge expansion.

(e) All steel components of joint system are non-proprietary and therefore can be fabricated in most steel fabrication shops.

(f) Preformed fabric trough material is also non-proprietary and can be repaired if punctured.

The disadvantages of this joint system include:

(a) Because of debris buildup, trough should be flushed out with high-pressure water in spring and fall.

(b) Although the cost for smaller opening joints is comparable to that of Strip Seals, larger opening joint cost is closer to the cost of Modular Joints due to the complexity of "finger joint" plate cuts.

(c) If scuppers are required to divert water away from the structure, fabrication can be complex and costly.

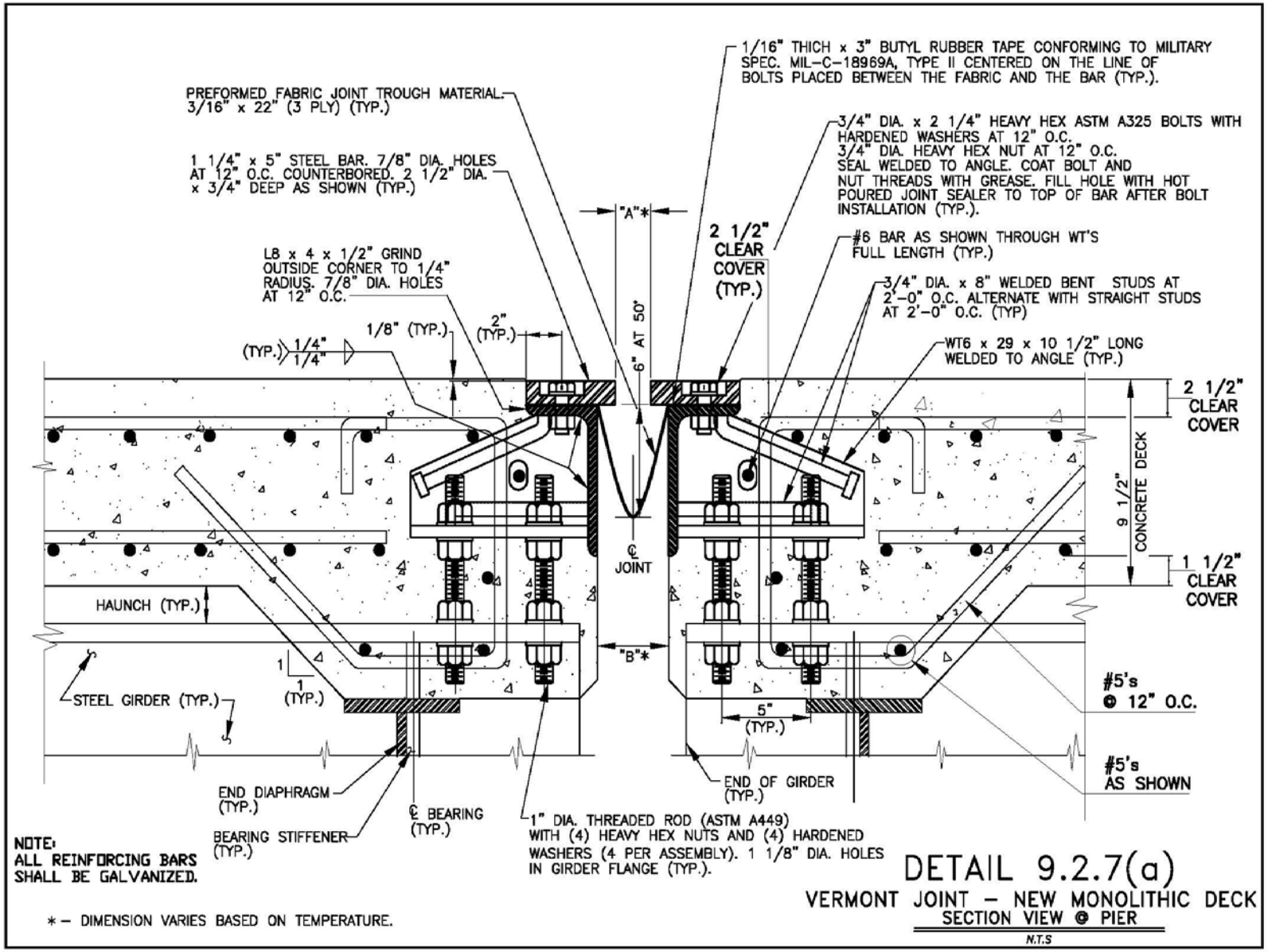
1/16" THICH x 3" BUTYL RUBBER TAPE CONFORMING TO MILITARY SPEC. MIL-C-18969A, TYPE II CENTERED ON THE LINE OF BOLTS PLACED BETWEEN THE FABRIC AND THE BAR (TYP.).
PREFORMED FABRIC JOINT TROUGH MATERIAL. 3/16" x 22" (3 PLY) (TYP.)
3/4" DIA. x 2 1/4" HEAVY HEX ASTM A325 BOLTS WITH HARDENED WASHERS AT 12" O.C. 3/4" DIA. HEAVY HEX NUT AT 12" O.C. SEAL WELDED TO ANGLE. COAT BOLT AND NUT THREADS WITH GREASE. FILL HOLE WITH HOT POURED JOINT SEALER TO TOP OF BAR AFTER BOLT INSTALLATION (TYP.).
1 1/4" x 5" STEEL BAR. 7/8" DIA. HOLES AT 12" O.C. COUNTERBORED. 2 1/2" DIA. x 3/4" DEEP AS SHOWN (TYP.)
"A"*
2 1/2" CLEAR COVER (TYP.)
#6 BAR AS SHOWN THROUGH WT'S FULL LENGTH (TYP.)
L8 x 4 x 1/2" GRIND OUTSIDE CORNER TO 1/4" RADIUS. 7/8" DIA. HOLES AT 12" O.C.
3/4" DIA. x 8" WELDED BENT STUDS AT 2'-0" O.C. ALTERNATE WITH STRAIGHT STUDS AT 2'-0" O.C. (TYP)
6" AT 50°
1/8" (TYP.)
2" (TYP.)
(TYP.) 1/4" 1/4"
WT6 x 29 x 10 1/2" LONG WELDED TO ANGLE (TYP.)
2 1/2" CLEAR COVER
9 1/2"
CONCRETE DECK
℄ JOINT
1 1/2" CLEAR COVER
HAUNCH (TYP.)
"B"*
1 1 (TYP.)
STEEL GIRDER (TYP.)
#5's @ 12" O.C.
5" (TYP.)
#5's AS SHOWN
END DIAPHRAGM (TYP.)
℄ BEARING (TYP.)
END OF GIRDER (TYP.)
BEARING STIFFENER (TYP.)
1" DIA. THREADED ROD (ASTM A449) WITH (4) HEAVY HEX NUTS AND (4) HARDENED WASHERS (4 PER ASSEMBLY). 1 1/8" DIA. HOLES IN GIRDER FLANGE (TYP.).
NOTE: ALL REINFORCING BARS SHALL BE GALVANIZED.
* – DIMENSION VARIES BASED ON TEMPERATURE.
DETAIL 9.2.7(a)
VERMONT JOINT – NEW MONOLITHIC DECK
SECTION VIEW @ PIER
N.T.S
J:\ORANGEBK\ENGLISH\927a&927b&927c

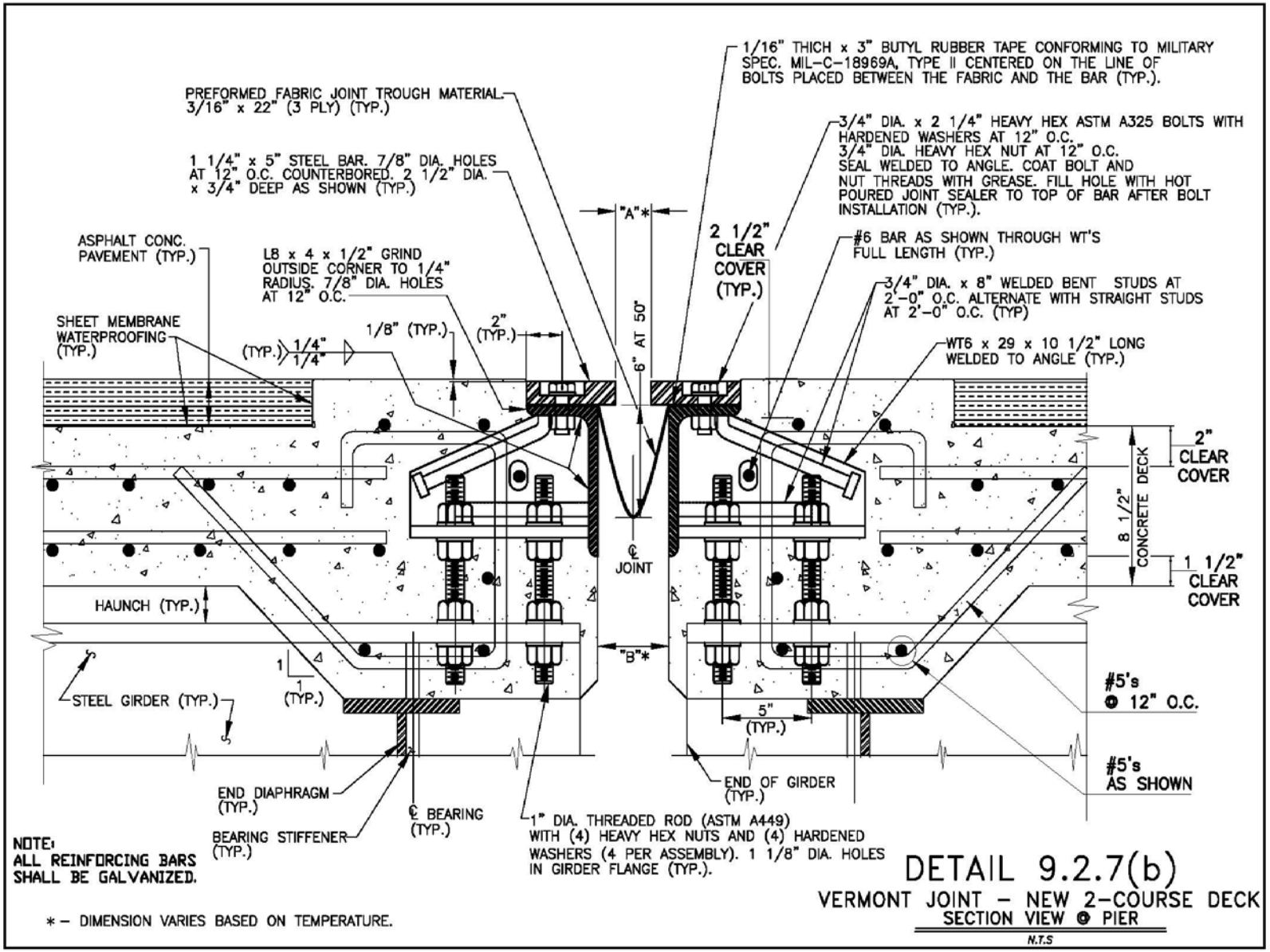
1/16" THICH x 3" BUTYL RUBBER TAPE CONFORMING TO MILITARY SPEC. MIL-C-18969A, TYPE II CENTERED ON THE LINE OF BOLTS PLACED BETWEEN THE FABRIC AND THE BAR (TYP.).
PREFORMED FABRIC JOINT TROUGH MATERIAL 3/16" x 22" (3 PLY) (TYP.)
3/4" DIA. x 2 1/4" HEAVY HEX ASTM A325 BOLTS WITH HARDENED WASHERS AT 12" O.C. 3/4" DIA. HEAVY HEX NUT AT 12" O.C. SEAL WELDED TO ANGLE. COAT BOLT AND NUT THREADS WITH GREASE. FILL HOLE WITH HOT POURED JOINT SEALER TO TOP OF BAR AFTER BOLT INSTALLATION (TYP.).
1 1/4" x 5" STEEL BAR. 7/8" DIA. HOLES AT 12" O.C. COUNTERBORED. 2 1/2" DIA. x 3/4" DEEP AS SHOWN (TYP.)
"A"*
2 1/2" CLEAR COVER (TYP.)
#6 BAR AS SHOWN THROUGH WT'S FULL LENGTH (TYP.)
ASPHALT CONC. PAVEMENT (TYP.)
L8 x 4 x 1/2" GRIND OUTSIDE CORNER TO 1/4" RADIUS. 7/8" DIA. HOLES AT 12" O.C.
3/4" DIA. x 8" WELDED BENT STUDS AT 2'-0" O.C. ALTERNATE WITH STRAIGHT STUDS AT 2'-0" O.C. (TYP)
SHEET MEMBRANE WATERPROOFING (TYP.)
1/8" (TYP.)
2" (TYP.)
6" AT 50"
(TYP.) 1/4" 1/4"
WT6 x 29 x 10 1/2" LONG WELDED TO ANGLE (TYP.)
2" CLEAR COVER
8 1/2" CONCRETE DECK
1 1/2" CLEAR COVER
℄ JOINT
HAUNCH (TYP.)
"B"*
1 1 (TYP.)
STEEL GIRDER (TYP.)
5" (TYP.)
#5's @ 12" O.C.
#5's AS SHOWN
END DIAPHRAGM (TYP.)
℄ BEARING (TYP.)
END OF GIRDER (TYP.)
BEARING STIFFENER (TYP.)
1" DIA. THREADED ROD (ASTM A449) WITH (4) HEAVY HEX NUTS AND (4) HARDENED WASHERS (4 PER ASSEMBLY). 1 1/8" DIA. HOLES IN GIRDER FLANGE (TYP.).
NOTE: ALL REINFORCING BARS SHALL BE GALVANIZED.
* - DIMENSION VARIES BASED ON TEMPERATURE.
DETAIL 9.2.7(b)
VERMONT JOINT - NEW 2-COURSE DECK
SECTION VIEW @ PIER
N.T.S
J:\ORANGEBK\ENGLISH\927a&927b&927c

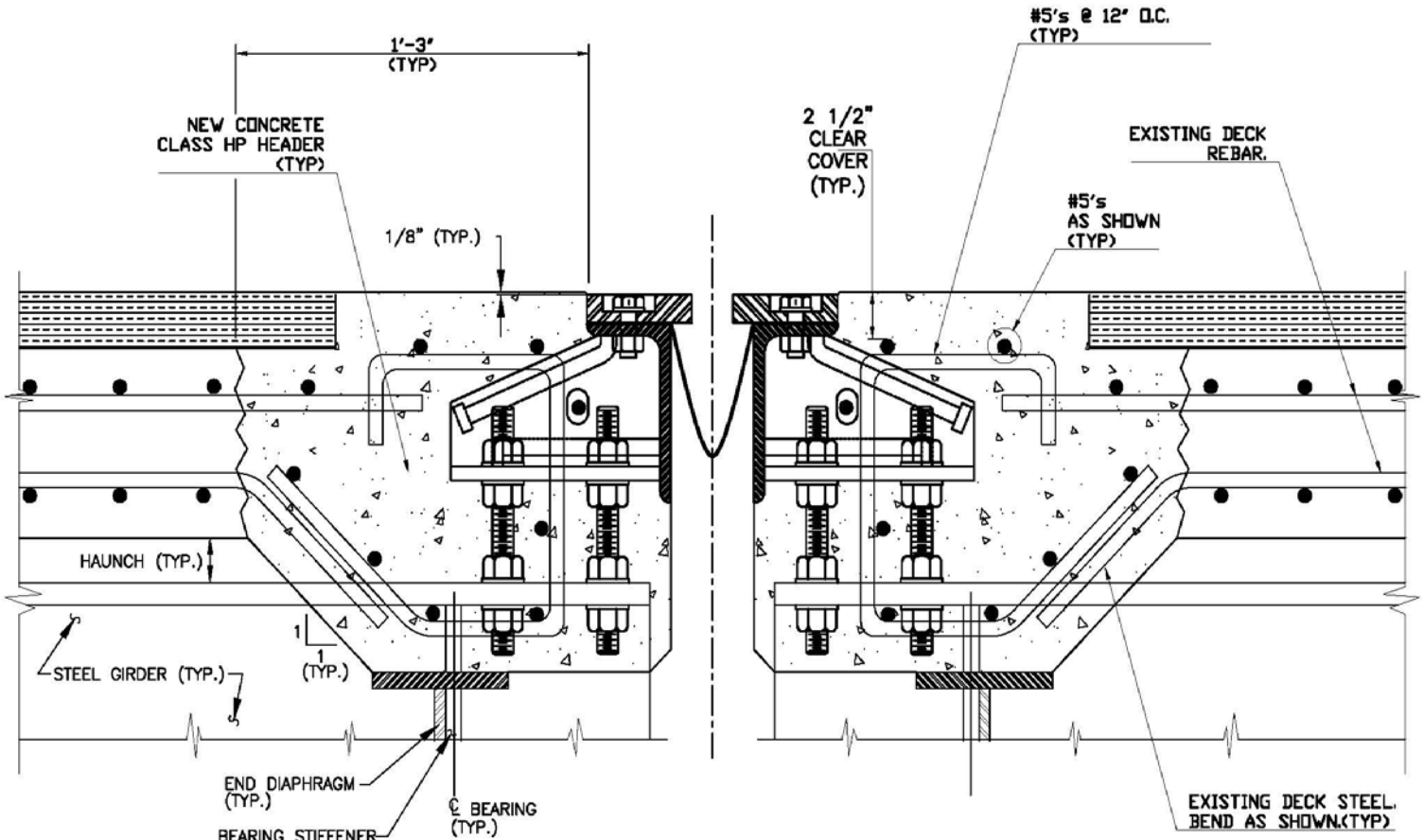

DETAIL 9.2.7(c)

VERMONT JOINT – EXISTING DECK

SECTION VIEW @ PIER

N.T.S

NOTE:
ALL NEW REINFORCING BARS
SHALL BE GALVANIZED.

J:\ORANGEBK\ENGLISH\927a&927b&927c

9.2.8 - MODULAR JOINTS

This joint system basically consists of one or m ore cells (modules) of strip seal joints, acting in unison, to accommodate large movements. Through the use of a system of springs, bearing surfaces and specifically machined parts, movements up to approximately 30 inches can be tolerated. Prefabricated support boxes house all of the springs and sliding mechanisms. These boxes rest on the top surface of the back wall and a block out in the deck. Separate headers are then poured to complete the installation. There is a mechanical connection between the strip seal and the edge beams, which support them Because of their complexity, these joints are expensive and should only be used when no other option will provide for the necessary movement. This joint system is illustrated on Details 9.2.8(a), 9.2.8(b), & 9.2.8(c).

The advantages of this joint system include:

(a) Excellent for bridges with very large expansions (up to 30 inches).

(b) Rigidly connected to superstructure.

The disadvantages of this joint system include:

(a) Extremely expensive.

(b) Very complex components, difficult to fabricate and install.

(c) High maintenance, prone to mechanical failures.

J:\ORANGEBK\ENGLISH\928a&928b&928c

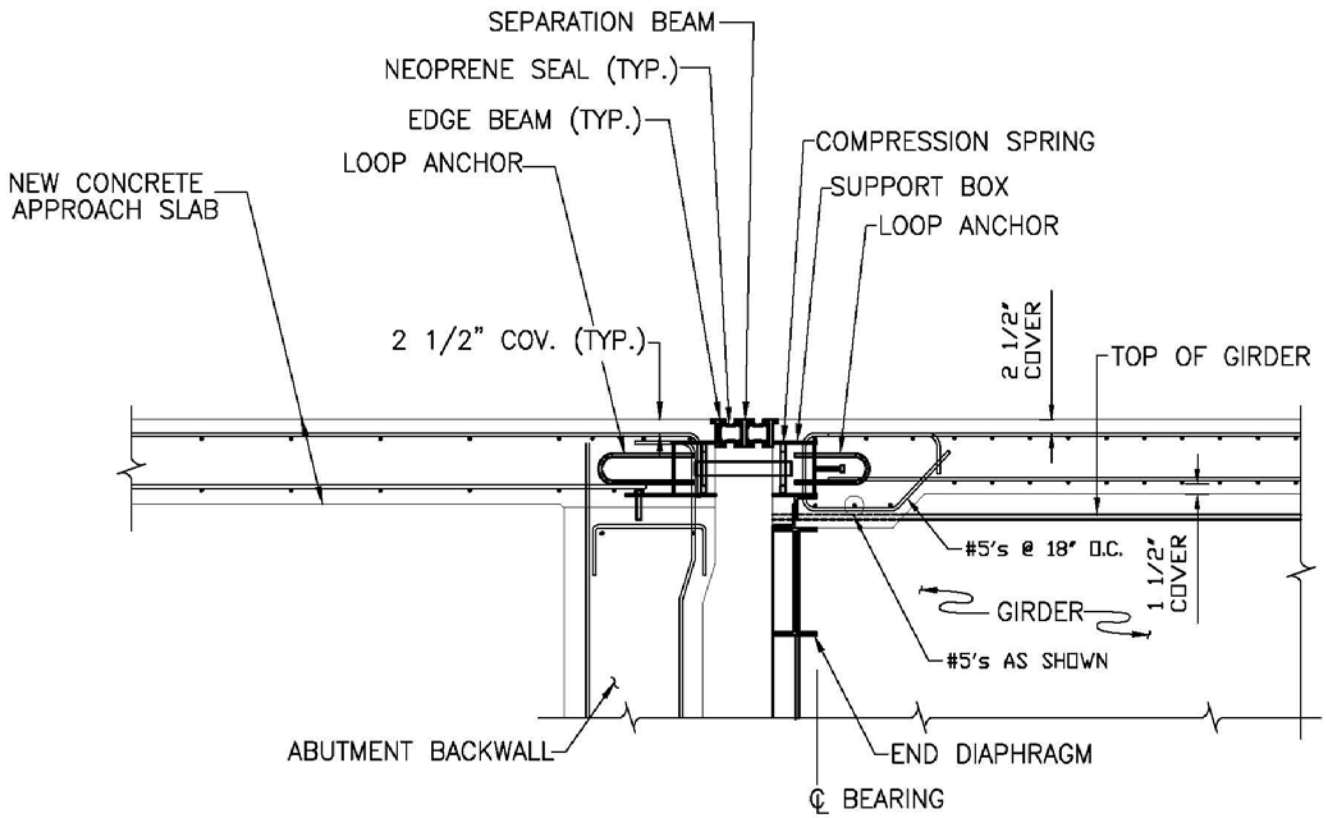

MODULAR JOINT – NEW MONOLITHIC DECK

N.T.S.

DETAIL 9.2.8(a)

NOTE:
ALL REINFORCING BARS SHALL BE GALVANIZED.

J:\ORANGEBK\ENGLISH\928a&928b&928c

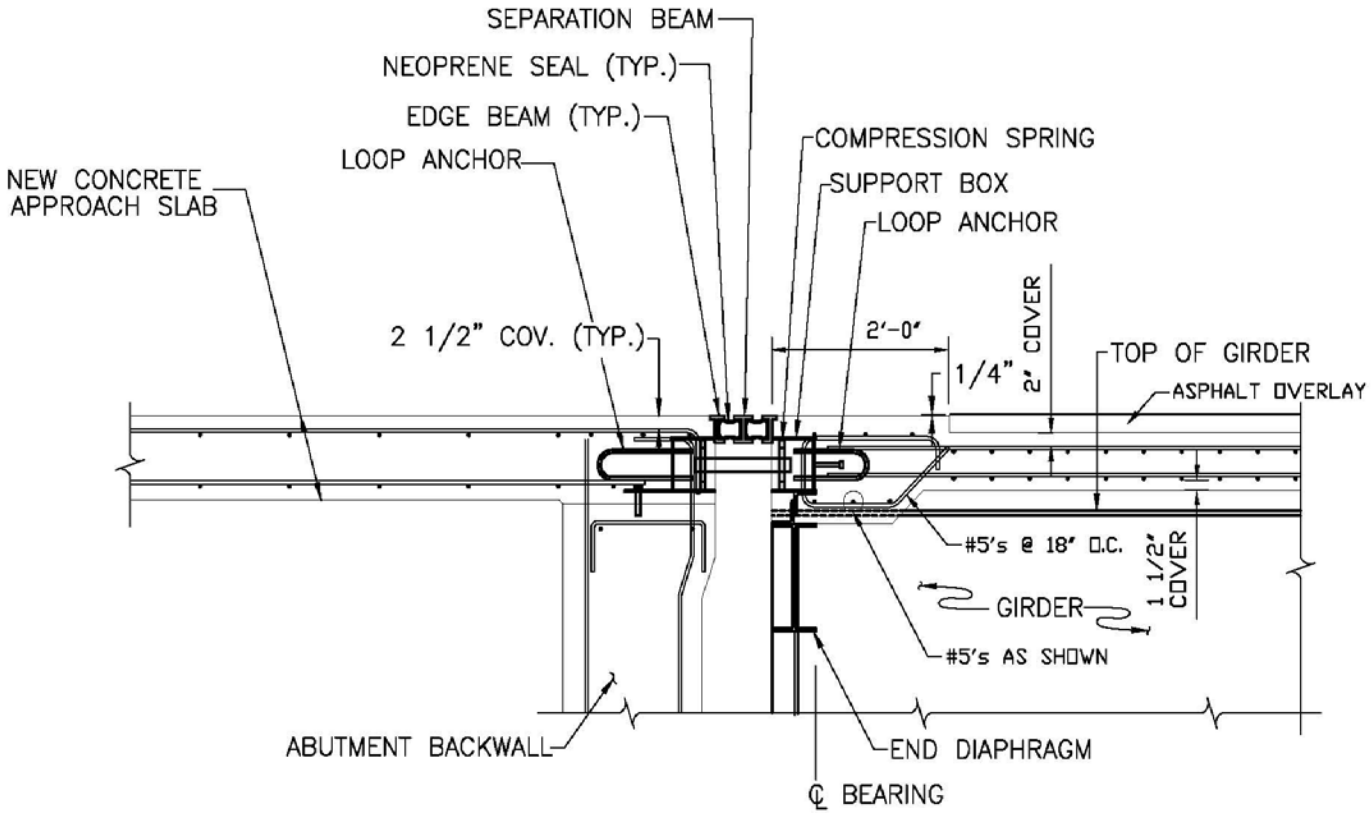

MODULAR JOINT – NEW 2-COURSE DECK

N.T.S.

DETAIL 9.2.8(b)

NOTE:
ALL REINFORCING BARS SHALL BE GALVANIZED.

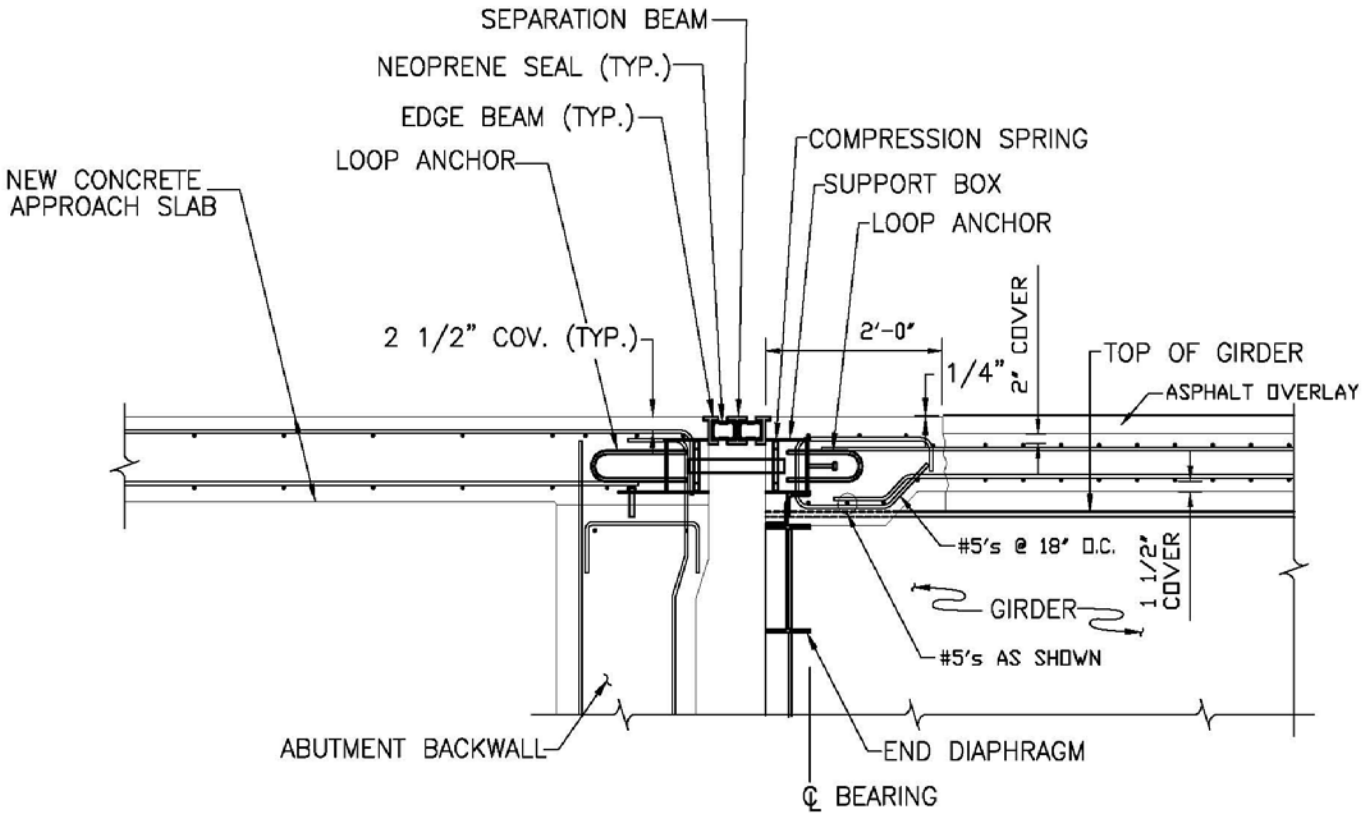

MODULAR JOINT – EXISTING DECK

N.T.S.

DETAIL 9.2.8(c)

NOTE:
ALL NEW REINFORCING BARS SHALL BE GALVANIZED.

J:\ORANGEBK\ENGLISH\928a&928b&928c

9.3 - RAIL, BARRIER, CURBS, AND SIDEWALKS

Where a rail, concrete barrier, curb or sidewalk passes over an expansion joint, provision must be made for the longitudinal movement between the sections over the joint. In the case of steel bridge rail over a swale, the bridge joint will follow the swale cross slope to the fascia. In the case of steel bridge rail over a curb or sidewalk, the bridge joint will pass under the curb/sidewalk continuing at the cross slope of the roadway to the fascia. Similar to the curb/sidewalk situation, when a concrete barrier passes over a bridge expansion joint, the joint will pass under the barrier continuing at the cross slope of the roadway to the fascia.

This continuation of the joint to the fascia provides a channel for excess water to drain off the structure. In order for the joint hardware to be unobstructed and the flow of runoff to be unimpeded; curbs, sidewalks and barriers must have special details where they pass over expansion joints.

9.3.1 - STEEL BRIDGE RAIL WITH CURBS OR SIDEWALKS

Where a curb or sidewalk is used in conjunction with steel bridge rail, the curb/sidewalk must have a gap the same width as the joint opening, directly over the joint. This will allow for unimpeded longitudinal movement of the bridge.

To allow room for maintenance of the joint hardware and unimpeded flow of the runoff, the curb/sidewalk must be blocked out in the vicinity of the joint. The width of this block-out will depend on the joint anchorage system used and the area required for the unimpeded flow of run- off.

See Details 9.3.1(a) and 9.3.1(b).

The gap in the sidewalk provided for movement is, itself, a hazard to pedestrians, bicycles and traffic. For this reason, the gap must be covered and bridged. This is accomplished with a ½ inch steel cover plate as shown in Detail 9.3.1(b). The sidewalk is recessed in the area of the cover plate so that the surface transition is smooth. The leading edge of the cover plate is fastened to the sidewalk with **ASTM** A325 countersunk bolts. The trailing edge of the cover plate is left free to slide on the adjacent section of sidewalk.

If used on new mainline and ramp structures, brush curbs and safety walks (sidewalks less than or equal to 3'-6" wide fromface of curb to deck fascia) do not require a coverplate over the gap unless the gap is greater than 4 inches. If used on new overhead structures where pedestrian traffic is allowed, brush curbs and safety walks, shall be covered as shown in Detail 9.3.1(a).

Existing sidewalks, safety walks, and brush curbs need not be retrofitted with coverplates as described above unless these walks/curbs are being reconstructed as part of a rehabilitation project.

J:\ORANGEBK\ENGLISH\931a&931b

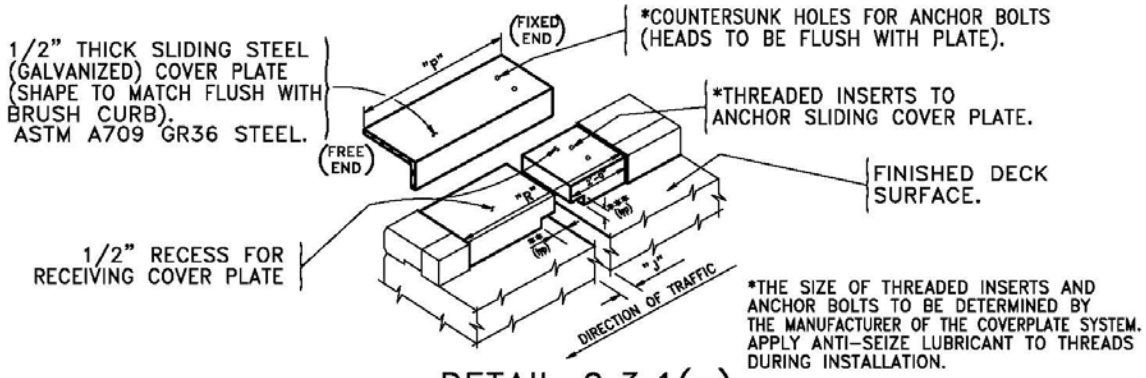

DETAIL 9.3.1(a)
COVER PLATE DETAIL
FOR BRUSH CURBS
NOT TO SCALE

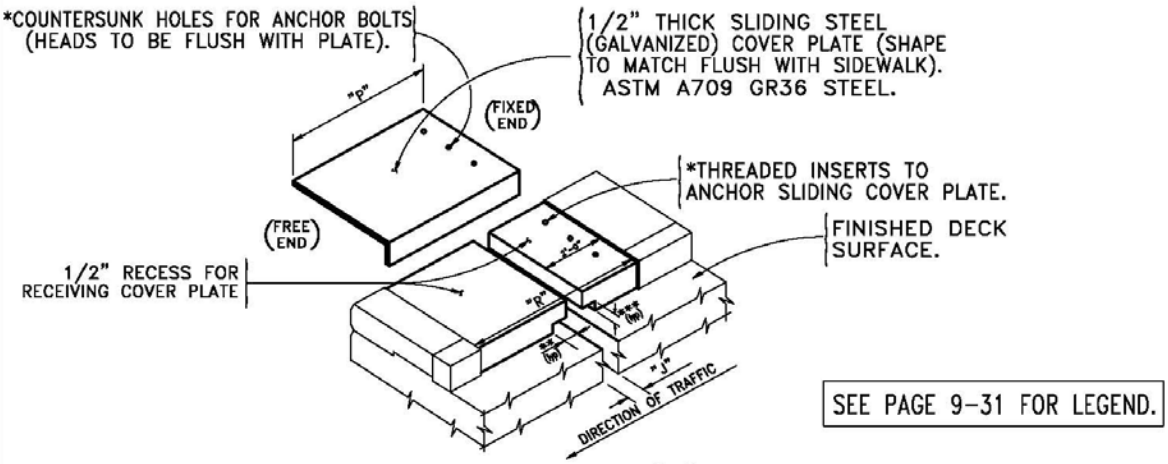

DETAIL 9.3.1(b)
COVER PLATE DETAIL
FOR SIDEWALKS
NOT TO SCALE

NOTE:

STONE CURB SHALL BE TUCKPOINTED WITH EPOXY POLY-SULFIDE GROUT, SPEC. 721-03, IN THE AREA OF THE JOINT HEADER. THIS GROUT SHALL ALSO BE USED TO SEAL BETWEEN THE CURB AND THE COVERPLATE ON THE FIXED END.THE COST FOR THIS WORK IS TO BE INCLUDED IN THE UNIT PRICE BID FOR THE CURB ITEM.

9.3.2 - CONCRETE MEDIAN OR FASCIA BARRIER

Where a concrete barrier passes over an expansion joint at the fascia or median, the barrier must have a gap in it the same width as the joint opening, directly over the joint. This will allow for unimpeded longitudinal movement of the bridge.

To allow room for maintenance of the joint hardware and unimpeded flow of the runoff, the barrier must be blocked out in the vicinity of the joint. The width of this block-out will depend on the joint anchorage system used and the area required for the unimpeded flow of runoff. See Details 9.3.2(a) and 9.3.2(b).

The gap in the barrier provided for movement is, itself, a hazard to pedestrians, bicycles and traffic. For this reason, the gap must be covered and bridged in most cases. Gaps in barrier must be covered if adjacent to two way traffic or if the maximum opening (during the coldest weather) is greater than 4 inches. This is accomplished with a ½ inch thick steel cover plate as shown in the details. The barrier is recessed in the area of the cover plate so that the surface transition is smooth. The leading edge of the cover plate is fastened to the barrier with **ASTM** A325 countersunk bolts. The trailing edge of the cover plate is left free to slide on the adjacent section of barrier. When the traffic is only going in one direction and the maximum gap is 4 inches or less, a coverplate is not required. In this case the leading edge of the trailing barrier need only be chamfered 1 inch on 12 inches for the full height.

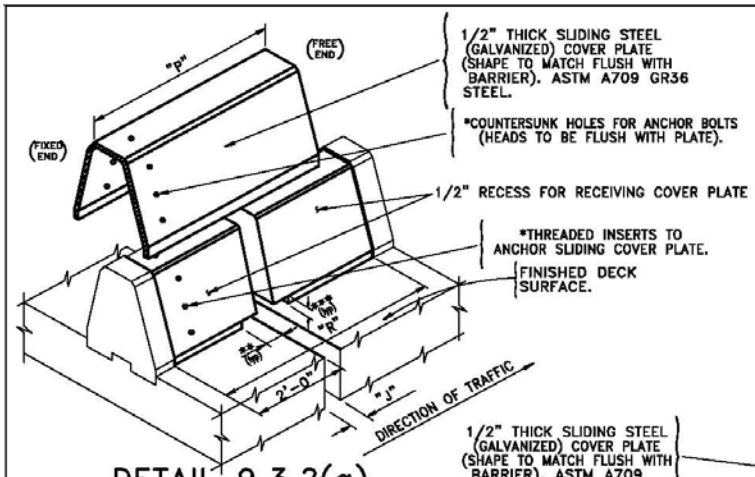

DETAIL 9.3.2(a)
COVER PLATE DETAIL
FOR MEDIAN CONCRETE BARRIER
NOT TO SCALE

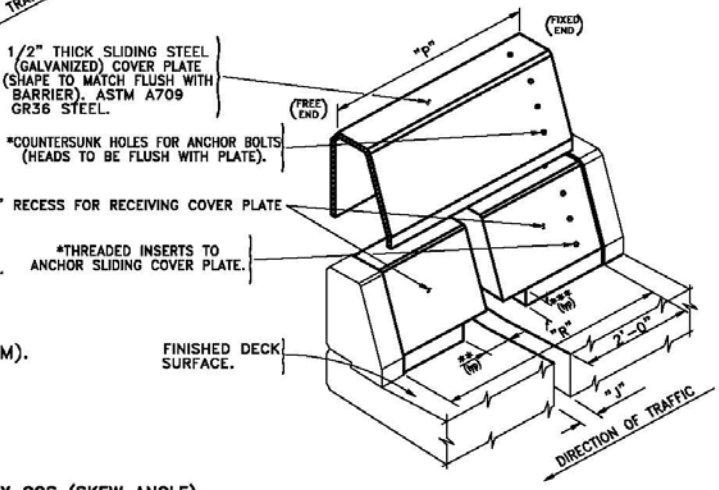

DETAIL 9.3.2(b)
COVER PLATE DETAIL
FOR CONCRETE BARRIER
HALF SECTION
NOT TO SCALE

LEGEND.

* – THE SIZE OF THREADED INSERTS AND ANCHOR BOLTS TO BE DETERMINED BY THE MANUFACTURER OF THE JOINT SYSTEM. APPLY ANTI-SEIZE LUBRICANT TO THREADS DURING INSTALLATION.

** – BLOCKOUT WIDTH IN BARRIER FOR JOINT HARDWARE (2 INCH MINIMUM).

*** – BLOCKOUT HEIGHT IN BARRIER. (2 INCH MINIMUM).

DESIGN MOVEMENTS:

FOR SKEW LESS THAN 45°:

= SPAN (ft) X 0.0078 (in/ft) X COS (SKEW ANGLE)

FOR SKEW GREATER THAN 45°:

= SPAN (ft) X 0.0078 (in/ft) X SIN (SKEW ANGLE)

"J" – JOINT OPENING AT 68°F.

"P" – LENGTH OF STEEL COVER PLATE.

"P" = 4'-0" + "J"

"R" – LENGTH OF BARRIER RECESS PLUS JOINT OPENING.

"R" = 4'-0" + "J" + TOTAL EXPECTED ONE WAY MOVEMENT.

NOTES:

1. THE CONCRETE FURNISHED AND PLACED ON THE DECK IN THE AREA OF THE RECESSES FOR INSTALLING THE COVERPLATE SYSTEM SHALL COMPLY WITH THE SPECS FOR THE SLAB ITEM, EXCEPT THAT MACHINE FINISHING WILL NOT BE REQUIRED. THE COST FOR FURNISHING AND PLACING THIS CONCRETE SHALL BE INCLUDED IN THE UNIT PRICE OF THE SLAB ITEM.

2. THE COST FOR THE JOINT WORK ON THE CURB/SIDEWALK/BARRIER, INCLUDING THE COVERPLATE AND FASTENERS SHALL BE INCLUDED IN THE PRICE BID FOR THE CURB/SIDEWALK/BARRIER ITEM(S).

J:\ORANGEBK\ENGLISH\932a&932b

9.4 - SNOW PLOW ANGLE

One problem which should be addressed during the design stage is the relationship between the skew angle and the angle of the snow plow blades. If a bridge is skewed in the same direction and the skew angle approximates the angle of the snow plow blade, problems can develop during snow removal. While the trucks are plowing a bridge,the blade can catch the joint, creating a possibility for injury to the driver or damage to the equipment or joint. The actual angle of the snow plow blades vary across the entire system, but under normal circumstances, they are set between 15° and 20° from a line which is perpendicular to the direction of travel. This, therefore, can be a problem with structures with a skew angle in that range. When such a structure is under design, the designer should contact the respective Division Highway Maintenance Engineer to determine the extent of the problem, if any. Should it be determined that a problem does exist, cooperation between the two parties will be required to devise a solution.